MOLEX PN	QTY PER BAG
1204660004	1
1204660012	200

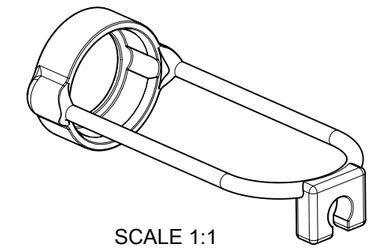

SCALE 1:1

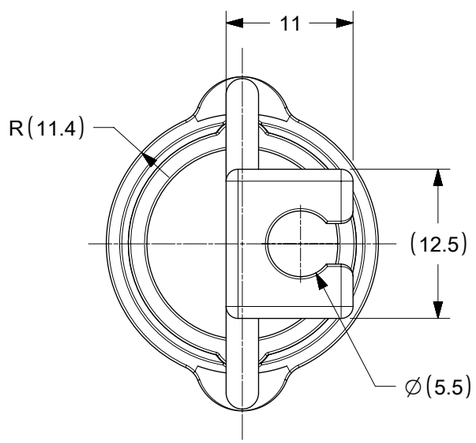

Notes:
1. Color: Blue
2. Material: TPE FORPRENE NEUTRAL A1A1000
3. Retention force on UltraLock Head: min. 5N
   Retention force on cable (typical Ø5.4): min. 2N
4. Temperature range: -40°C to +85°C

DOCUMENT STATUS	P1	RELEASE DATE	2023/12/18 14:01:53

FORMAT: master-b-size
REVISION: J1
DATE: 2021/05/01

THIS DRAWING CONTAINS INFORMATION THAT IS PROPRIETARY TO MOLEX ELECTRONIC TECHNOLOGIES, LLC AND SHOULD NOT BE USED WITHOUT WRITTEN PERMISSION

FUNCTIONAL SYMBOLS: FA = 0, FC = 0, FP = 0
DIVISIONAL SYMBOLS

DIMENSION UNITS	SCALE
mm	2:1

GENERAL TOLERANCES (UNLESS SPECIFIED)

ANGULAR TOL	±	1.0 °
4 PLACES	±	
3 PLACES	±	
2 PLACES	±	0.05
1 PLACE	±	0.1
0 PLACES	±	0.2

DRAFT WHERE APPLICABLE MUST REMAIN WITHIN DIMENSIONS

CURRENT REV DESC:

EC NO: 772095
DRWN: FDAFERNER 2023/12/18
CHK'D: RSILLER 2023/12/18
APPR: RSILLER 2023/12/18

INITIAL REVISION:
DRWN: AKABADI 2022/04/04
APPR: RSILLER 2023/12/18

molex

PULLER U12 MA XP XC CSE

PRODUCT CUSTOMER DRAWING

DOCUMENT NUMBER	DOC TYPE	DOC PART	REVISION
1204660004	PSD	000	A

THIRD ANGLE PROJECTION	DRAWING	SERIES	MATERIAL NUMBER	CUSTOMER	SHEET NUMBER
	B-SIZE	120466	SEE TABLE	GENERAL MARKET	1 OF 1