REV.	ECN NO.	DATE	SIGN	DESCRIPTION
A		2023-10-11	Sam Ho	Rev.01 to A, Initial Released
B	C231401	2023-11-17	Sam Ho	B X1

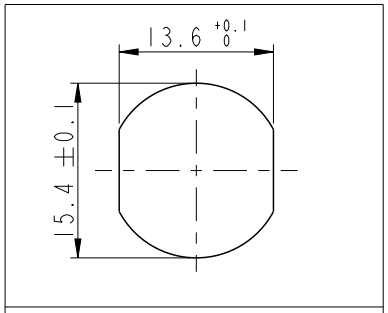

Recommended Panel Cut-Out

B HDMI2A-XXPMMP-SF8001

XX: No. Of Pin

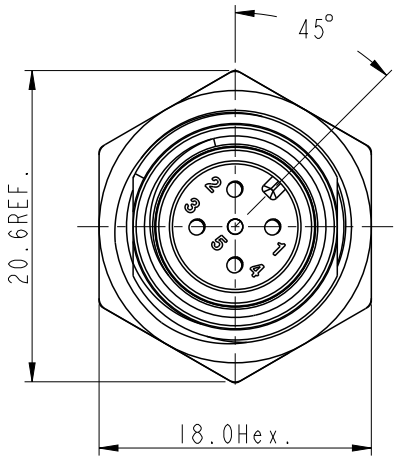

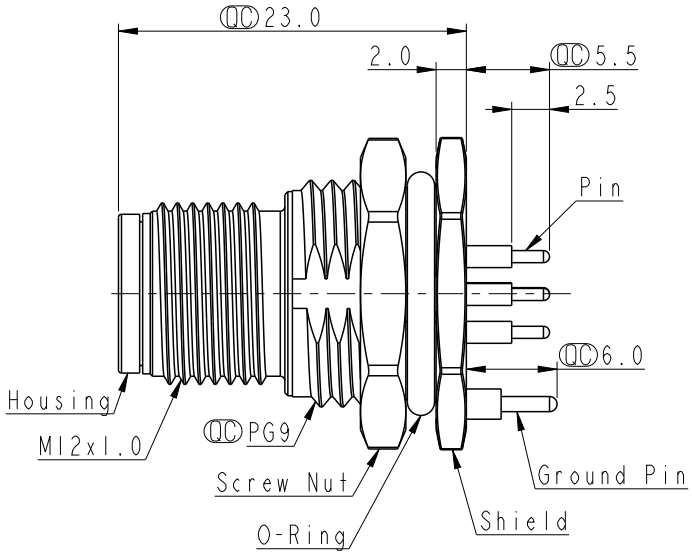

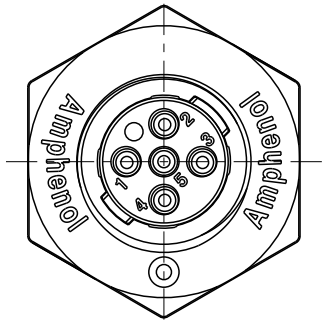

Note:
* RoHS Compliant
* QC Important dimension
* Waterproof rate: IP68, unmated 1m/24h
  IP69K, mated
* Connector
  Housing: Thermoplastic, Black
  Pin: Copper alloy, Gold plated
* Shield: Metal
* Screw Nut: Metal
* Ground Pin: Metal
* O-Ring: Rubber, Black
* For panel thickness max: 4.5mm
* Nut is packed separately in pe bag

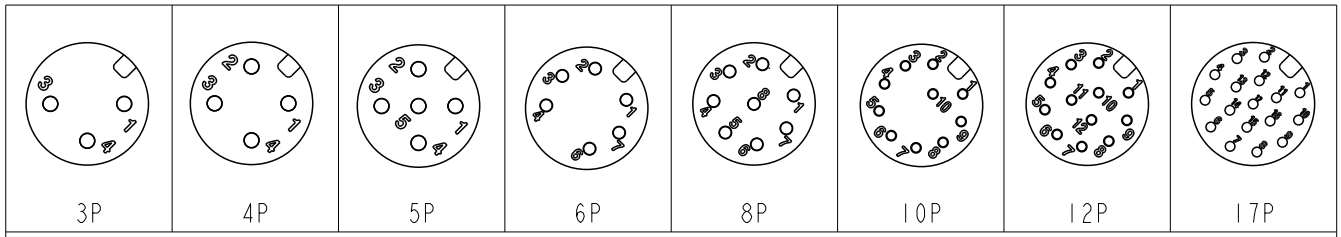

Pin Assignment Front View

UNIT: mm

TOLERANCE
.X ±0.25
.XX ±0.1
.XXX ±0.05
ANGLES ±1°

TITLE: N SEN, HDMI2 A-240H, HT, SCREW RECEPTACLE, M, M, PCB S

SCALE: 2:1 | SIZE: A4 | SHEET 1 OF 2

REV.: B | WC-REV.:

QC: Inspection item

Amphenol LTW

安費諾亮泰企業股份有限公司

ITEM NO	DRAWN BY: Sam Ho	DATE: 2023-11-17
DWG NO: HDMI2A-XXPMMP-SF8001	CHECKED BY: Neo Tsai	DATE: 2023-11-17
CUSTOMER: ALTW	APPROVED BY: Fred Lee	DATE: 2023-11-17

W10814-03-[redacted]01A2

THIS DOCUMENT IS SUBJECT TO CHANGE WITHOUT NOTICE. IT IS CONFIDENTIAL AND A PROPERTY OF Amphenol LTW. DISCLOSURE TO THIRD PARTY HAS TO BE AUTHORIZED BY Amphenol LTW.

THIS DOCUMENT IS SUBJECT TO CHANGE WITHOUT NOTICE. IT IS CONFIDENTIAL AND A PROPERTY OF Amphenol LTW. DISCLOSURE TO THIRD PARTY HAS TO BE AUTHORIZED BY Amphenol LTW.

PCB Layout

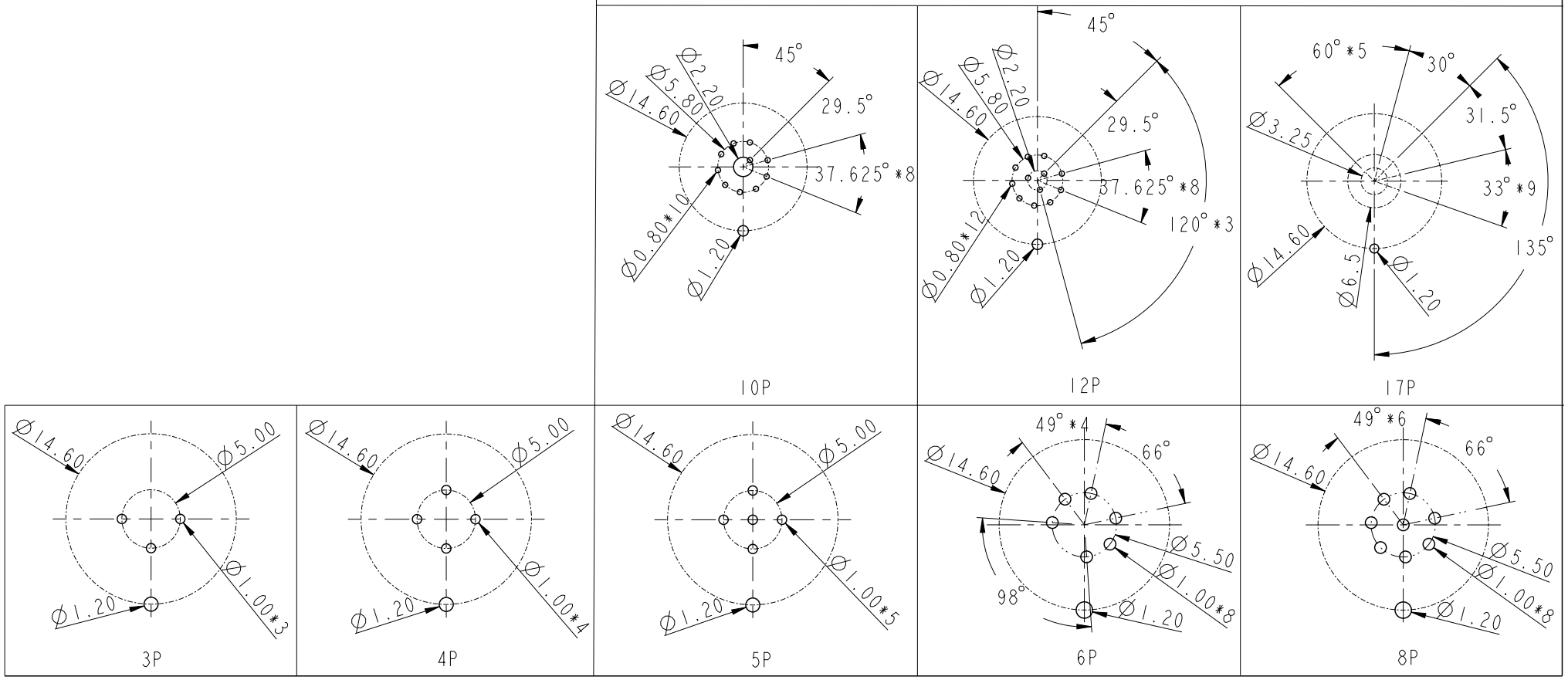

UNIT: mm

TOLERANCE

.X	±0.25
.XX	±0.1
.XXX	±0.05
ANGLES	±1°

TITLE	N SEN, HDMI2 A-240H, HT, SCREW RECEPTACLE, M, M, PCB S
SCALE	2:1
SIZE	A4
SHEET	2 OF 2
REV.	B
WC-REV.	
QC	: Inspection item

Amphenol LTW

安費諾亮泰企業股份有限公司

ITEM NO		DRAWN BY	Sam Ho	DATE	2023-11-17
DWG NO	HDMI2A-XXPMMP-SF8001	CHECKED BY	Neo Tsai	DATE	2023-11-17
CUSTOMER	ALTW	APPROVED BY	Fred Lee	DATE	2023-11-17

W10814-03-[redacted]01A2