© 2019 TE Connectivity. All Rights Reserved.

REVISIONS					
P	LTR	DESCRIPTION	DATE	DWN	APVD
	3	UPDATED FINISH	28DEC2020	DF	DR
	4	ADDED OVER-ALL DIMS	14MAY2021	DF	DR
	5	ADD DUST CAP	02JUL2021	CG	DR
	6	ADD NICKEL PTFE ASSEMBLIES	30JAN2023	CG	DR
	A	RELEASED PER ECN-23-223282	27JUL2023	MM	DR

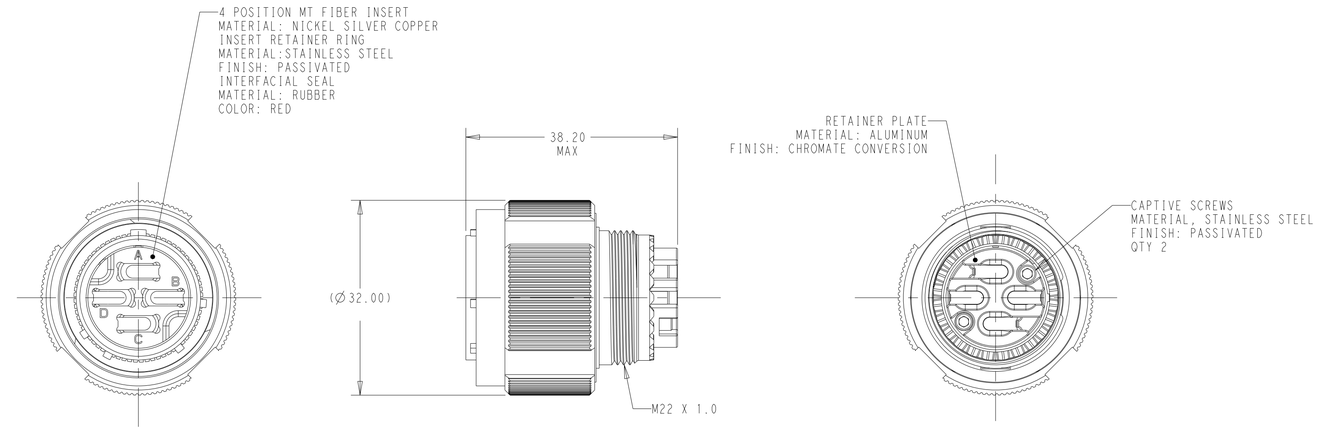

1. FINISH: OLIVER DRAB, CADMIUM.
2. FINISH: NICKEL, ELECTROLESS
3. FINISH: NICKEL PTFE

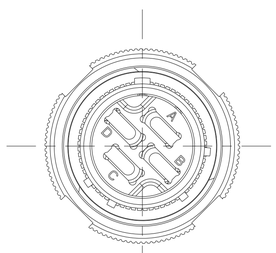

45 DEGREE
INSERT OPTION

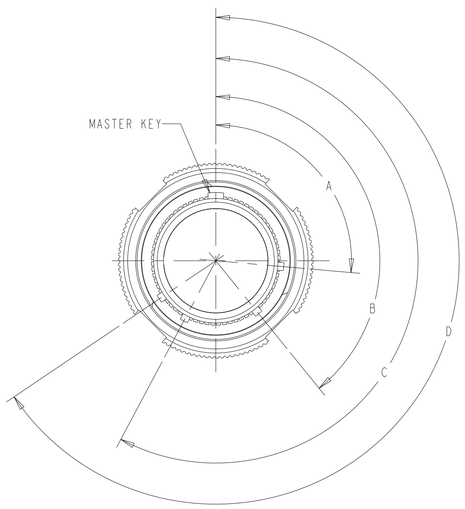

KEYING ORIENTATION	A	B	C	D
N	95°	141°	208°	236°
A	113°	156°	182°	292°
B	90°	145°	195°	252°

KEYING ORIENTATION DETAIL

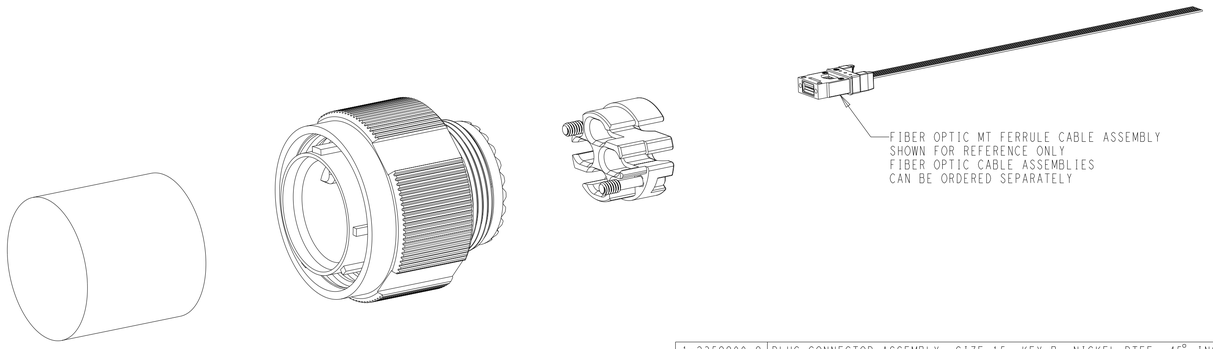

ASSEMBLY PART NUMBER	DESCRIPTION	
1-2358899-8	PLUG CONNECTOR ASSEMBLY, SIZE 15, KEY B, NICKEL PTFE, 45° INSERT	3
1-2358899-7	PLUG CONNECTOR ASSEMBLY, SIZE 15, KEY B, NICKEL PTFE	3
1-2358899-6	PLUG CONNECTOR ASSEMBLY, SIZE 15, KEY A, NICKEL PTFE, 45° INSERT	3
1-2358899-5	PLUG CONNECTOR ASSEMBLY, SIZE 15, KEY A, NICKEL PTFE	3
1-2358899-4	PLUG CONNECTOR ASSEMBLY, SIZE 15, KEY N, NICKEL PTFE, 45° INSERT	3
1-2358899-3	PLUG CONNECTOR ASSEMBLY, SIZE 15, KEY N, NICKEL PTFE	3
1-2358899-2	PLUG CONNECTOR ASSEMBLY, SIZE 15, KEY B, NICKEL, 45° INSERT	2
1-2358899-1	PLUG CONNECTOR ASSEMBLY, SIZE 15, KEY B, NICKEL	2
1-2358899-0	PLUG CONNECTOR ASSEMBLY, SIZE 15, KEY B, OLIVE DRAB, 45° INSERT	1
2358899-9	PLUG CONNECTOR ASSEMBLY, SIZE 15, KEY B, OLIVE DRAB	1
2358899-8	PLUG CONNECTOR ASSEMBLY, SIZE 15, KEY A, NICKEL, 45° INSERT	2
2358899-7	PLUG CONNECTOR ASSEMBLY, SIZE 15, KEY A, NICKEL	2
2358899-6	PLUG CONNECTOR ASSEMBLY, SIZE 15, KEY A, OLIVE DRAB, 45° INSERT	1
2358899-5	PLUG CONNECTOR ASSEMBLY, SIZE 15, KEY A, OLIVE DRAB	1
2358899-4	PLUG CONNECTOR ASSEMBLY, SIZE 15, KEY N, NICKEL, 45° INSERT	2
2358899-3	PLUG CONNECTOR ASSEMBLY, SIZE 15, KEY N, NICKEL	2
2358899-2	PLUG CONNECTOR ASSEMBLY, SIZE 15, KEY N, OLIVE DRAB, 45° INSERT	1
2358899-1	PLUG CONNECTOR ASSEMBLY, SIZE 15, KEY N, OLIVE DRAB	1

THIS DRAWING IS A CONTROLLED DOCUMENT.

DIMENSIONS: mm

TOLERANCES UNLESS OTHERWISE SPECIFIED:
0 PLC ±-
1 PLC ±-
2 PLC ±0.13
3 PLC ±0.013
4 PLC ±-
ANGLES ±1

MATERIAL - -

FINISH 1 - 2

DWN D. FABIAN 16JUL2019
CHK -
APVD -
PRODUCT SPEC -
APPLICATION SPEC -
WEIGHT -

TE Connectivity

NAME KIT, PLUG CONNECTOR ASSEMBLY FIBER OPTIC, MT, SIZE 15, 4 CAVITY 38999 STYLE

SIZE	CAGE CODE	DRAWING NO	RESTRICTED TO
A1	00779	C-2358899	-

CUSTOMER DRAWING | SCALE 2:1 | SHEET 1 OF 1 | REV A

4805 (3/13)