MOLEX P/N	ENGINEERING NUMBER
1300350121	ACAUXH

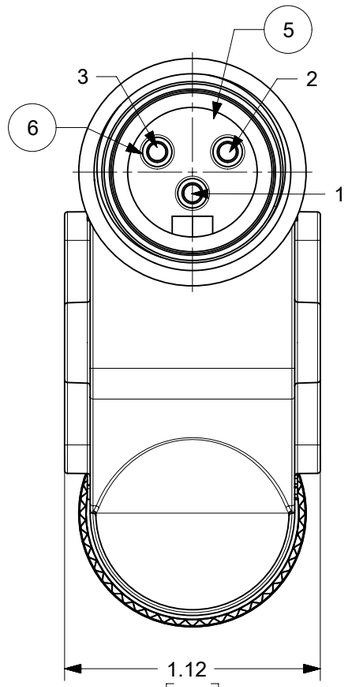

MALE FACE VIEW

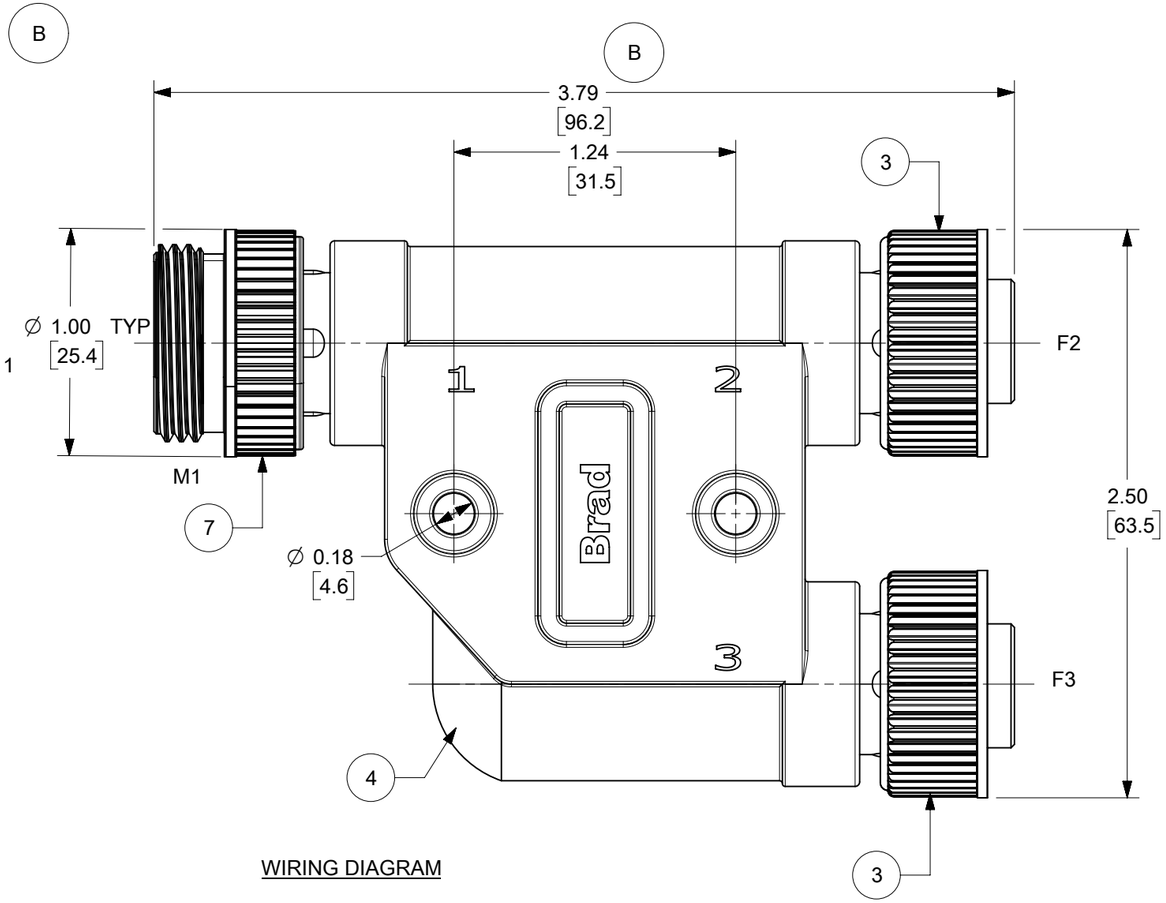

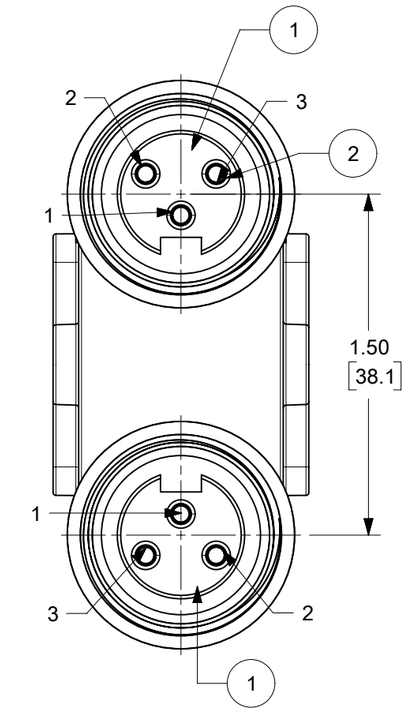

FEMALE FACE VIEW

WIRING DIAGRAM

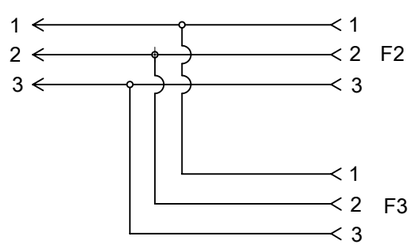

NOTES:
1) MATERIAL: SEE TABLE
2) FINISHES: SEE TABLE
3) ELECTRICAL DATA:
   VOLTAGE: 600VAC
   CURRENT: 10A
4) TEMP RATING: -20°C TO 80°C
5) IP67 WHEN FULLY MATED
6) COUPLING THREAD: 7/8-16 UN-2A AND UN-2B
7) ALL DIMS ARE FOR REFERENCE UNLESS TOLERANCED OR OTHERWISE NOTED

CABLE LENGTH TOLERANCES
<.3M [1FT]: +19mm-0 [+.75in-0]
.3 - .9M [1 - 3FT]: +44.5mm-0 [+1.75in-0]
.9 - 1.8M [3 - 6FT]: +55.6mm-0 [+2.19in-0]
1.8 - 3.7M [6 - 12FT: +88.9mm-0 [+3.50in-0]
3.7 - 7.3M [12 - 24FT]: +165.1mm-0 [+6.50in-0]
7.3-14.6M [24 - 48FT]: +317.5mm-0 [+12.50in-0]
14.6 - 30.5M [48-100FT]: +622.3mm-0 [+24.50in-0]
OVER 30M [100FT] +2% OF FINISHED LENGTH

ITEM	DESCRIPTION	MATERIAL	FINISH
7	COUPLING NUT - MALE, 7/8-16 UN THREADS	ZINC DIE CAST	BLACK
6	PIN CONTACT	COPPER ALLOY	GOLD PLATED
5	MALE INSERT	TPE	YELLOW
4	OVERMOLD	TPE	RED
3	COUPLING NUT - FEMALE, 7/8-16 UN THREADS	ZINC DIE CAST	BLACK
2	SOCKET CONTACT	COPPER ALLOY	GOLD PLATED
1	FEMALE INSERT	TPE	YELLOW

DOCUMENT STATUS	P1	RELEASE DATE	2023/04/17 12:52:31

THIS DRAWING CONTAINS INFORMATION THAT IS PROPRIETARY TO MOLEX ELECTRONIC TECHNOLOGIES, LLC AND SHOULD NOT BE USED WITHOUT WRITTEN PERMISSION

FUNCTIONAL SYMBOLS: FA = 0, FC = 0, FP = 0
DIVISIONAL SYMBOLS

DIMENSION UNITS	SCALE
INCH/MM	1.5:1

GENERAL TOLERANCES (UNLESS SPECIFIED)

ANGULAR TOL	±	°
4 PLACES	±	
3 PLACES	±	
2 PLACES	±	
1 PLACE	±	
0 PLACES	±	

DRAFT WHERE APPLICABLE MUST REMAIN WITHIN DIMENSIONS

CURRENT REV DESC: UPDATED ENGINEERING NUMBER, OVERALL LENGTH DIM, ADDED COUPLING NUT THREADS TO BOM

EC NO: 745587
DRWN: ALEON01 2023/04/06
CHK'D: HENRYB1 2023/04/14
APPR: BWOODMAN 2023/04/17

INITIAL REVISION:
DRWN: CCHRASTKA 2020/08/10
APPR: BWOODMAN 2021/02/19

THIRD ANGLE PROJECTION | DRAWING: B-SIZE | SERIES: 130035

molex

MC 3P SMALL H BLOCK RED

PRODUCT CUSTOMER DRAWING

DOCUMENT NUMBER	DOC TYPE	DOC PART	REVISION
1300350121	PSD	000	B

MATERIAL NUMBER	CUSTOMER	SHEET NUMBER
SEE TABLE		1 OF 1

FORMAT: master-B-size
REVISION: J
DATE: 2020/01/14