Mar.1.2024 Copyright 2024 HIROSE ELECTRIC CO., LTD. All Rights Reserved.
In case of consideration for using Automotive equipment / device which demand high reliability, kindly contact our sales window correspondents.

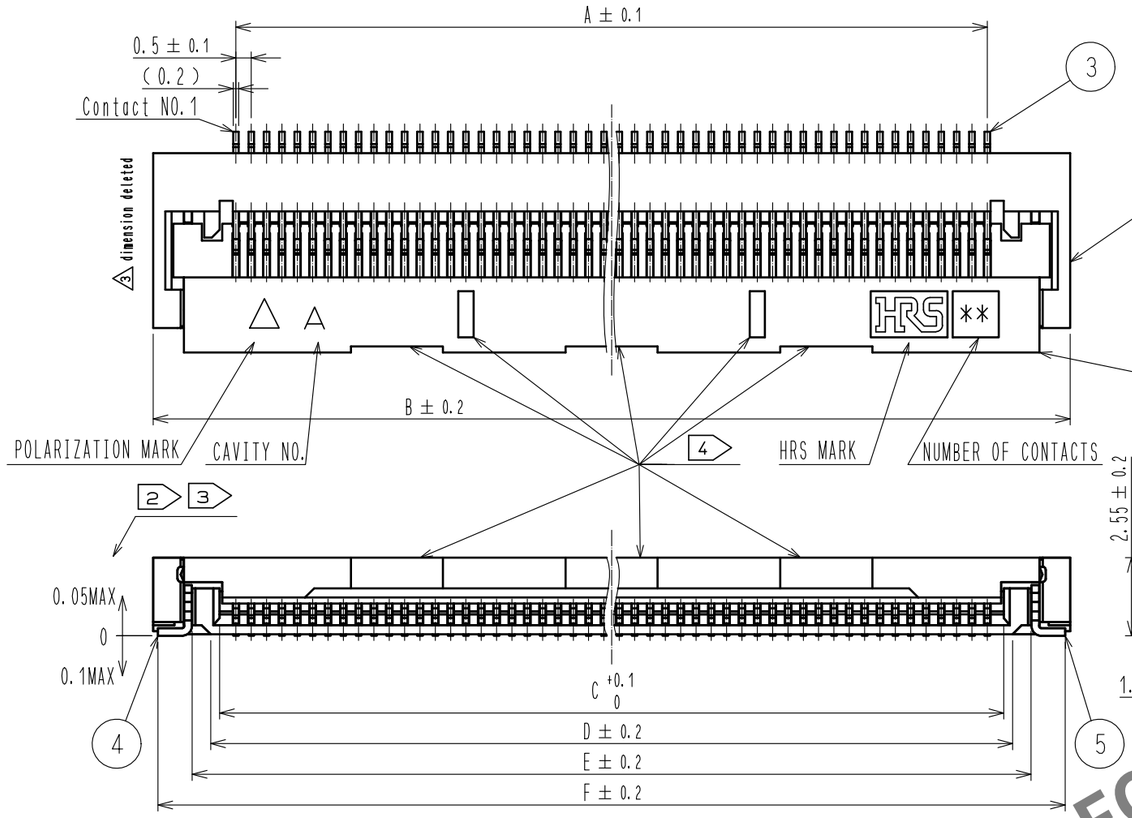

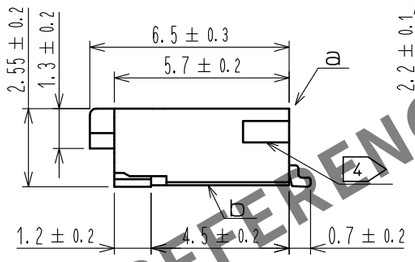

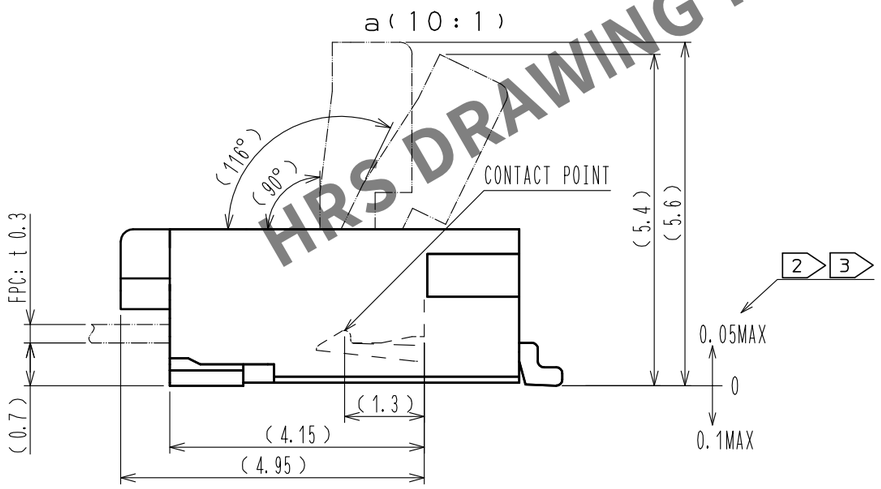

RECOMMENDED PCB MOUNTING PATTERN

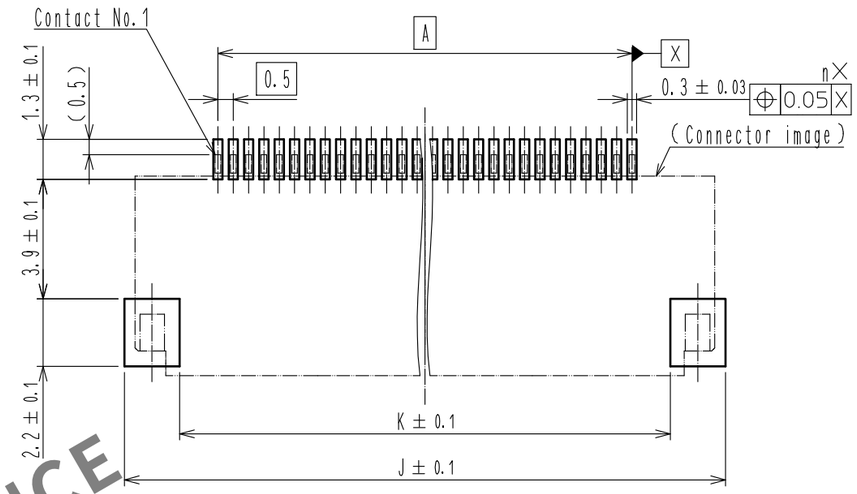

RECOMMENDED STENCIL PATTERN

(RECOMMENDED STENCIL THICKNESS : t=0.15)

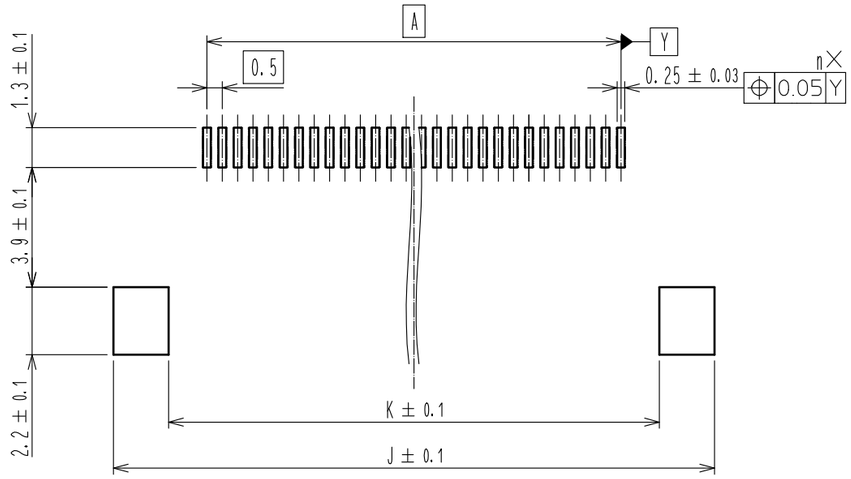

HRS DRAWING FOR REFERENCE

NOTES 1. The dimensions in parentheses are for reference.

2 Lead CO-PLANARITY including reinforced metal fittings shall be 0.1 MAX.

3 Dimension: from reference b.

4 Indicates notches or holes to prevent sink marks. The design and the location are discretionary, depending on the number of contacts.

5. This product satisfies halogen free requirements defined as 900ppm maximum chlorine, 900ppm maximum bromine, and 1500ppm maximum total of chlorine and bromine.

6. 'n' represents the number of contacts.

NO.	MATERIAL	FINISH , REMARKS	NO.	MATERIAL	FINISH , REMARKS
5	Brass	Tin plating 1μmMIN over nickel 1μmMIN			
4	Brass	Tin plating 1μmMIN over nickel 1μmMIN			
3	Copper alloy	(Contact area, lead) Gold plating 0.03μmMIN over nickel 1μmMIN (Other) Nickel plating 1μmMIN	9	(Connector)	
			8	Polystyrene	
2	LCP	(Black) UL94V-0	7	Polyester	
1	LCP	(Gray) UL94V-0	6	Polystyrene	

UNITS	SCALE	COUNT	DESCRIPTION OF REVISIONS	DESIGNED	CHECKED	DATE
mm	5 : 1	3 17	DIS-F-00009980	TA. SUZUKI	HS. HIRAHARA	20210719

HIROSE ELECTRIC CO., LTD.

APPROVED	: YN. TAKASHITA	20171110	DRAWING NO.	EDC-380099-00-00
CHECKED	: SJ. OKAMURA	20171109	PART NO.	FH28K-*S-0.5SH
DESIGNED	: SG. MASAKI	20171109	CODE NO.	CL586
DRAWN	: KY. KIKUCHI	20171109		3 1/9

Mar.1.2024 Copyright 2024 HIROSE ELECTRIC CO., LTD. All Rights Reserved.
In case of consideration for using Automotive equipment / device which demand high reliability, kindly contact our sales window correspondents.

RECOMMENDED FPC/FFC (15:1)

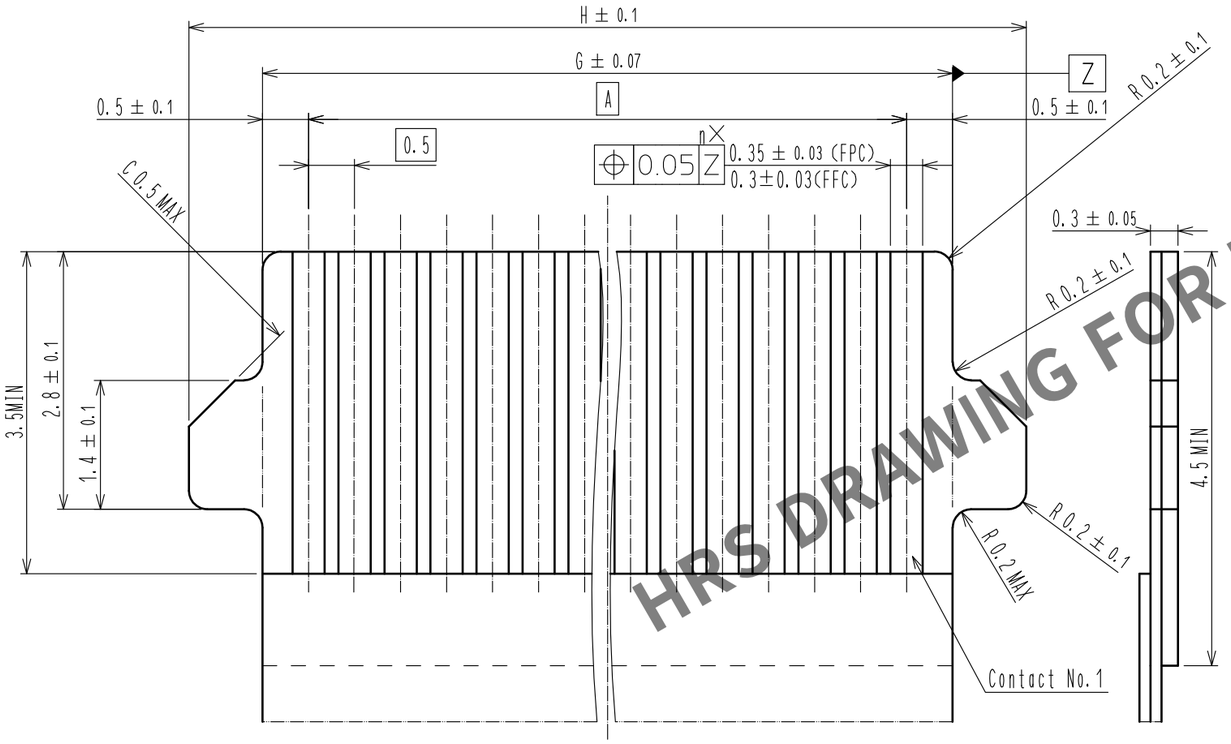

FPC CONFIGURATION (REFERENCE EXAMPLE) (SCALE:FREE)

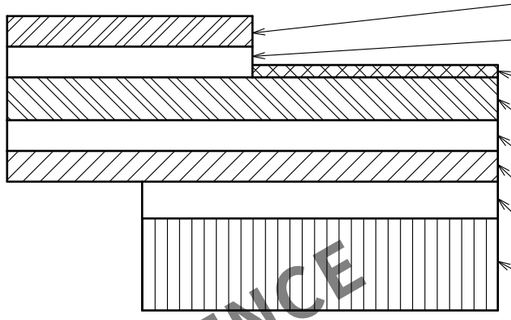

MATERIAL NAME	MATERIAL	THICKNESS(μm)
COVERING FILM LAYER	POLYIMIDE 1mil thick.	(25)
COVER ADHESIVE		(25)
SURFACE TREATMENT	Nickel undercoat 1 to 5μm + Gold plating 0.2μm	3
COPPER FOIL	Cu 1 oz	35
BASE ADHESIVE	HEAT-HARDENED ADHESIVE	25
BASE FILM	POLYIMIDE 1mil thick	25
REINFORCEMENT MATERIAL ADHESIVE	HEAT-HARDENED ADHESIVE	30
STIFFENER FILM	POLYIMIDE 7 mil thick	175

FFC CONFIGURATION (REFERENCE EXAMPLE) (SCALE:FREE)

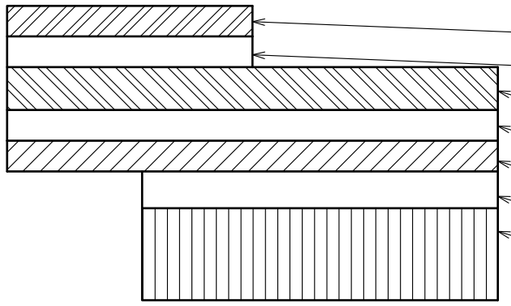

MATERIAL NAME	MATERIAL	THICKNESS(μm)
POLYESTER FILM		12
ADHESIVE	THERMOPLASTIC POLYESTER	30
GOLD PLATED, SOFT COPPER FILM		35
ADHESIVE	POLYESTER	30
POLYESTER		12
ADHESIVE	POLYESTER	30
STIFFENER FILM	POLYESTER	188

HRS DRAWING FOR REFERENCE

DRAWING NO.	EDC-380099-00-00
PART NO.	FH28K-*S-0.5SH
CODE NO.	CL586

3 2/9

Mar.1.2024 Copyright 2024 HIROSE ELECTRIC CO., LTD. All Rights Reserved.
In case of consideration for using Automotive equipment / device which demand high reliability, kindly contact our sales window correspondents.

TAPE WIDTH:32mm MIN

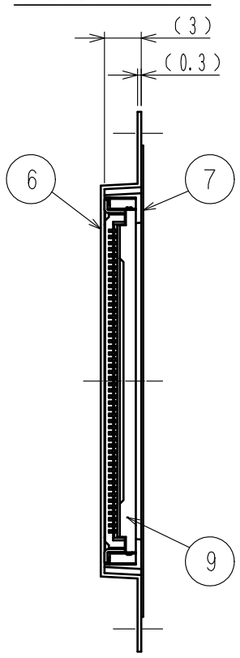

EMBOSSED CARRIER TAPE DIMENSION(2:1)

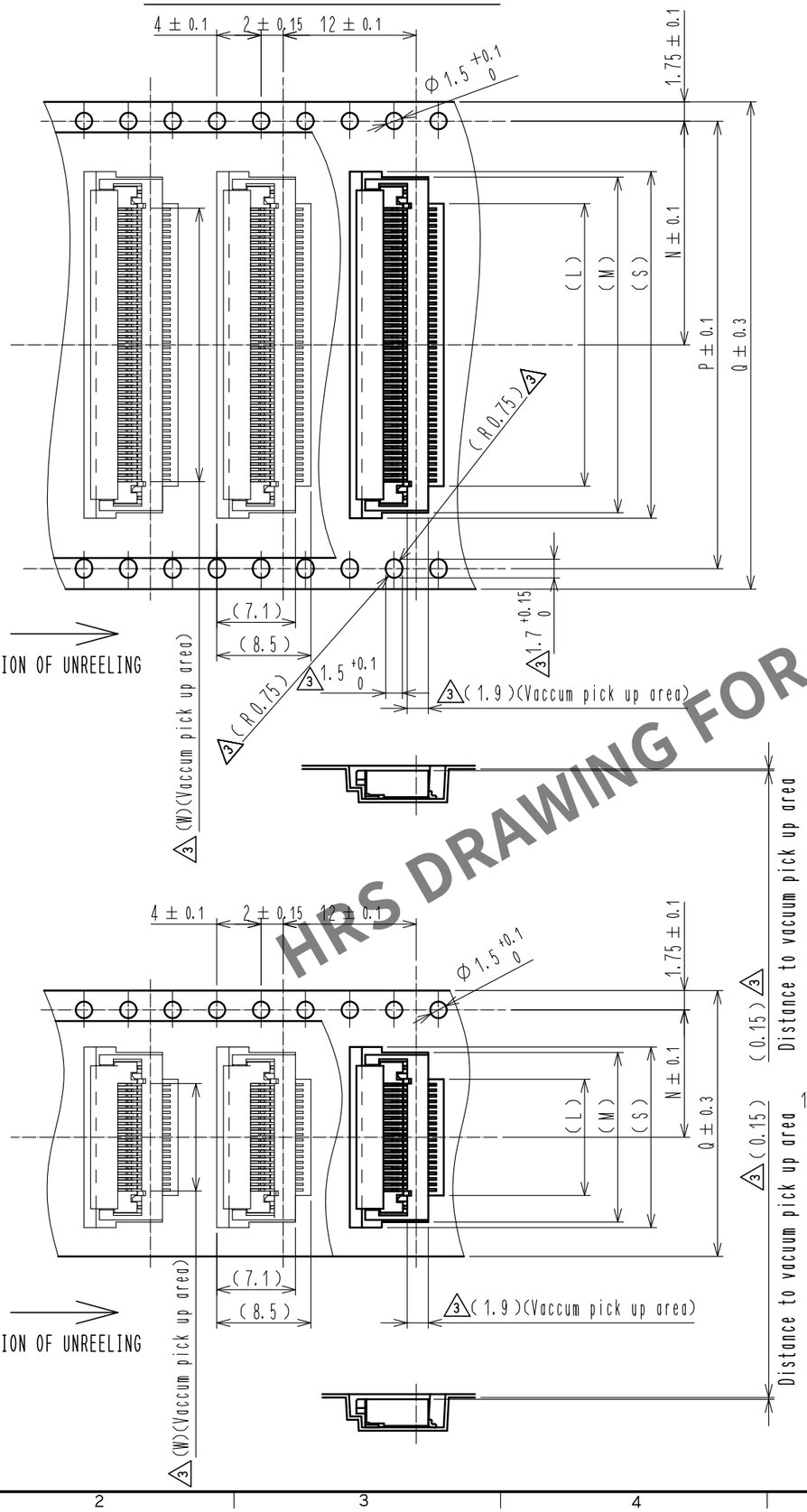

REEL DIMENSION (FREE)

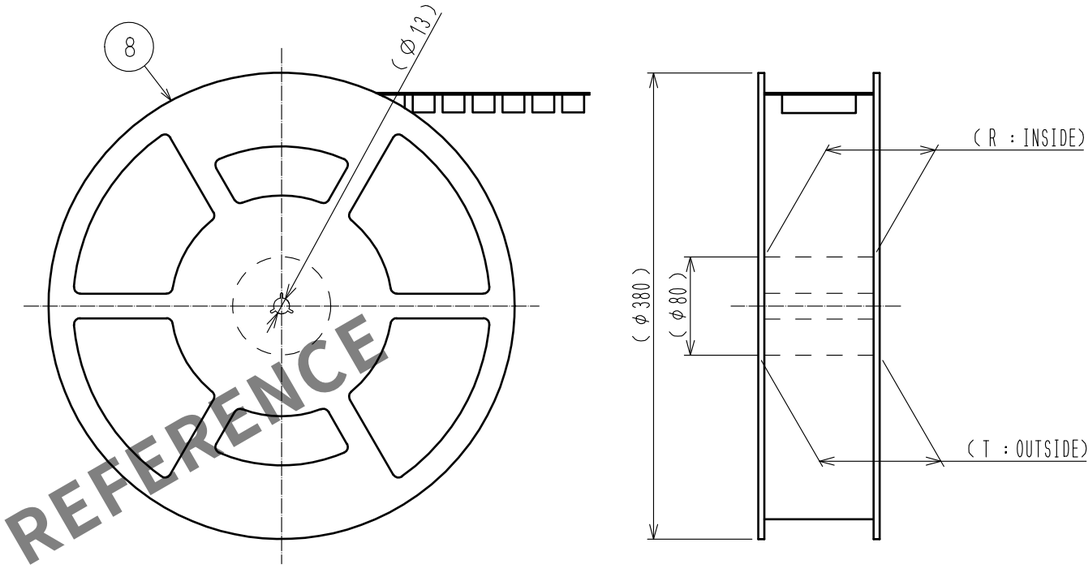

TAPE WIDTH:24mm MAX

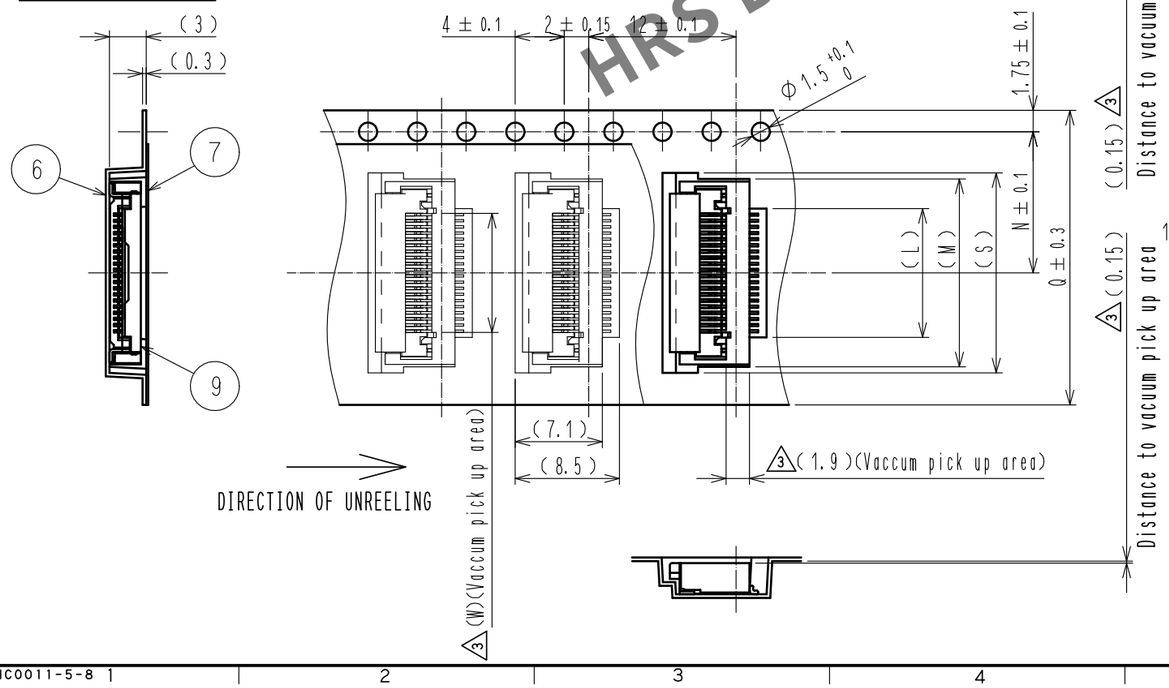

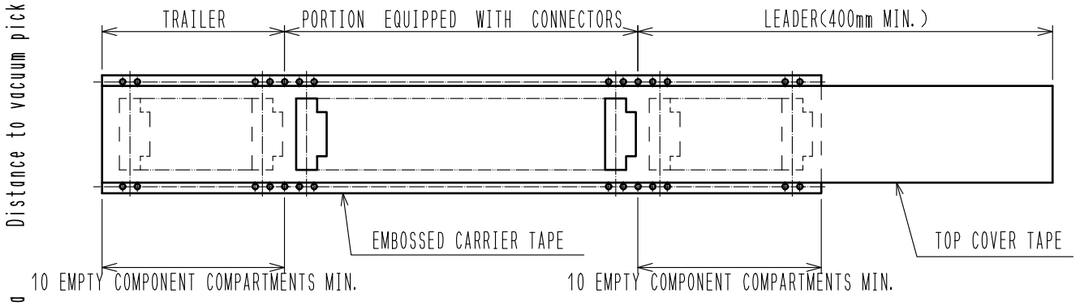

NOTE 7 Per reel:2000 connectors.
8 Refer to JIS C 0806 and IEC 60286-3 (packaging of components for automatic handling).

HRS DRAWING FOR REFERENCE

DRAWING FOR PACKING

HRS	DRAWING NO.	EDC-380099-00-00
	PART NO.	FH28K-*S-0.5SH
	CODE NO.	CL586

3 / 9

FORM HC0011-5-8

Mar.1.2024 Copyright 2024 HIROSE ELECTRIC CO., LTD. All Rights Reserved.
In case of consideration for using Automotive equipment / device which demand high reliability, kindly contact our sales window correspondents.

PART NO.	CODE NO.	Number of contact	DIMENSION TABLE OF CONNECTOR, FPC, FFC, LAND PATTERN AND STENCIL PATTERN										DIMENSION TABLE OF DRAWING FOR PACKING △3								
			A	B	C	D	E	F	G	H	J	K	L	M	N	P	Q	R	T	S	W
FH28K-10S-0.5SH	CL586-1876-0-00	10	4.5	9.9	5.57	6.15	7.35	9.58	5.5	7.1	10.6	7	5.5	10.3	11.5	-	24	25.4	29.4	11.3	4.71
FH28K-15S-0.5SH	CL586-1883-0-00	15	7	12.4	8.07	8.65	9.85	12.08	8	9.6	13.1	9.5	8	12.8	11.5	-	24	25.4	29.4	13.8	7.21
FH28K-20S-0.5SH	CL586-1879-0-00	20	9.5	14.9	10.57	11.15	12.35	14.58	10.5	12.1	15.6	12	10.5	15.3	11.5	-	24	25.4	29.4	16.3	9.71
FH28K-28S-0.5SH	CL586-1880-0-00	28	13.5	18.9	14.57	15.15	16.35	18.58	14.5	16.1	19.6	16	14.5	19.3	14.2	28.4	32	33.4	37.4	20.3	13.71
FH28K-30S-0.5SH	CL586-1877-0-00	30	14.5	19.9	15.57	16.15	17.35	19.58	15.5	17.1	20.6	17	15.5	20.3	14.2	28.4	32	33.4	37.4	21.3	14.71
FH28K-40S-0.5SH	CL586-1878-0-00	40	19.5	24.9	20.57	21.15	22.35	24.58	20.5	22.1	25.6	22	20.5	25.3	20.2	40.4	44	45.4	49.4	-	19.71
FH28K-45S-0.5SH	CL586-1884-0-00	45	22	27.4	23.07	23.65	24.85	27.08	23	24.6	28.1	24.5	23	27.8	20.2	40.4	44	45.4	49.4	28.8	22.21
FH28K-50S-0.5SH	CL586-1875-0-00	50	24.5	29.9	25.57	26.15	27.35	29.58	25.5	27.1	30.6	27	25.5	30.3	20.2	40.4	44	45.4	49.4	-	24.71
FH28K-55S-0.5SH	CL586-1881-0-00	55	27	32.4	28.07	28.65	29.85	32.08	28	29.6	33.1	29.5	28	32.8	20.2	40.4	44	45.4	49.4	-	27.21
FH28K-60S-0.5SH	CL586-1872-0-00	60	29.5	34.9	30.57	31.15	32.35	34.58	30.5	32.1	35.6	32	30.5	35.3	26.2	52.4	56	57.4	61.4	36.3	29.71
FH28K-64S-0.5SH	CL586-1882-0-00	64	31.5	36.9	32.57	33.15	34.35	36.58	32.5	34.1	37.6	34	32.5	37.3	26.2	52.4	56	57.4	61.4	-	31.71
FH28K-68S-0.5SH	CL586-1873-0-00	68	33.5	38.9	34.57	35.15	36.35	38.58	34.5	36.1	39.6	36	34.5	39.3	26.2	52.4	56	57.4	61.4	40.3	33.71
FH28K-74S-0.5SH	CL586-1885-0-00	74	36.5	41.9	37.57	38.15	39.35	41.58	37.5	39.1	42.6	39	37.5	42.3	26.2	52.4	56	57.4	61.4	43.3	36.71

HRS DRAWING FOR REFERENCE

HRS	DRAWING NO.	EDC-380099-00-00
	PART NO.	FH28K-*S-0.5SH
	CODE NO.	CL586 △3 4/9

Mar.1.2024 Copyright 2024 HIROSE ELECTRIC CO., LTD. All Rights Reserved.
In case of consideration for using Automotive equipment / device which demand high reliability, kindly contact our sales window correspondents.

This connector requires delicate and careful handling.
Read through the instructions shown below and handle the connector properly.
Each values indicating here are for reference and may differ from standard value.

[Connector Part Nomenclature]

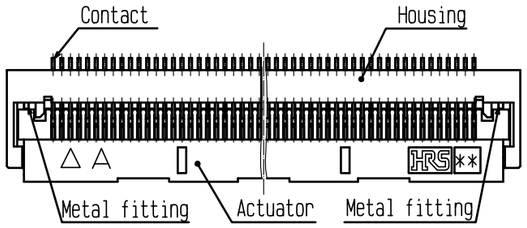

Top view

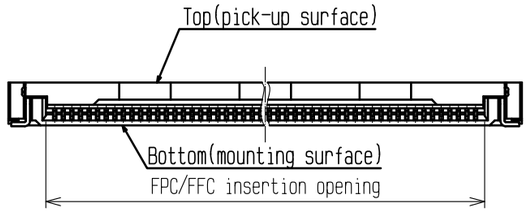

Front view

[Operation and Precautions]

1. Initial condition
   The connector is delivered with the actuator closed.

   [Caution]
   -Do not insert FPC/FFC or operate actuator before mounting.

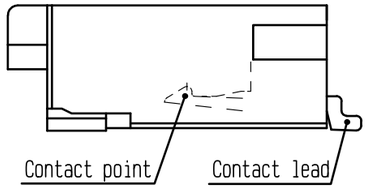

《Contact view》

2. How to unlock (Before inserting FPC/FFC)

   The actuator rotates on its axis as shown below.
   Slowly flip up the actuator to release the lock.(example 1)

   [Caution]
   -Do not apply extra force to the connector while rotating the actuator as the illustration shows.(example 2)
   -Open the actuator by carefully lifting it at the center.(example 3)
   -Do not lift the actuator at one end only.(example 4)
   -The actuator must be operated by hand only.
   Do not insert any tools or fingernails into the connector.(example 5, 6)
   -The actuator rotates 116 degrees max.
   Do not try to rotate the actuator further towards the opening direction or apply any extra force to the actuator while it is fully open.(example 7)
   -Do not attempt to dislodge the actuator.(example 8,9)

Example 3

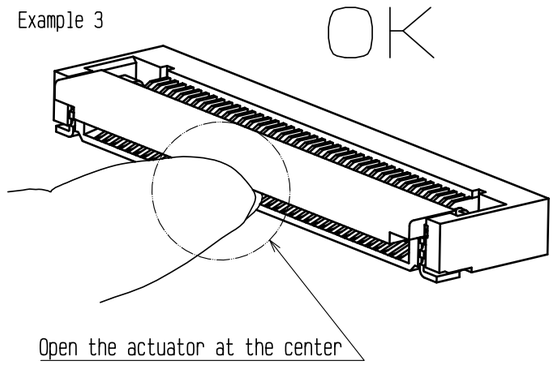

- Correct operation -

Example 4

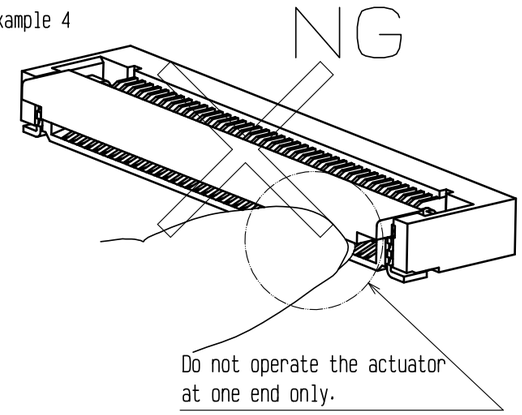

- Incorrect operation -

Example 5

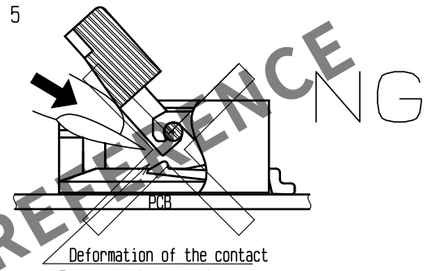

- Incorrect operation -

Example 6

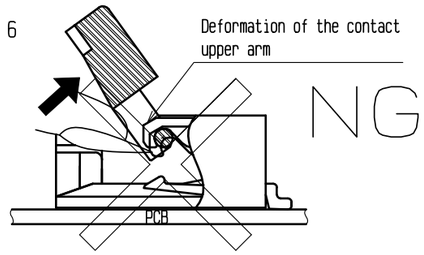

- Incorrect operation -

Example 7

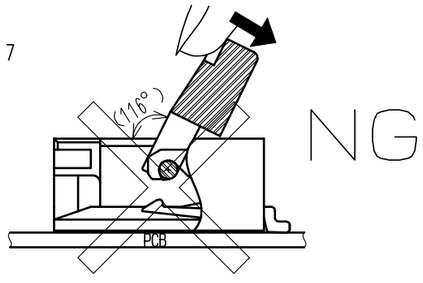

- Incorrect operation -

Example 1

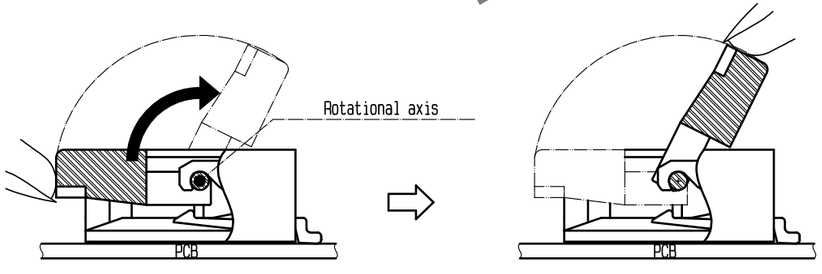

- Correct operation -

Example 2

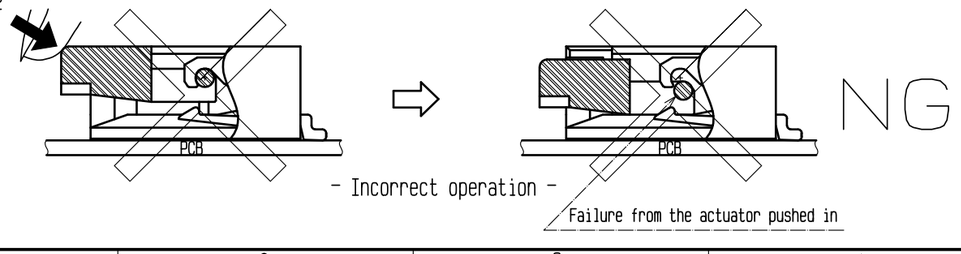

- Incorrect operation -

Example 8

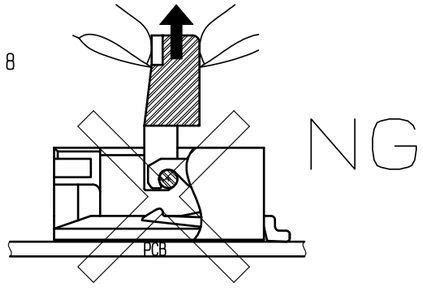

- Incorrect operation -

Example 9

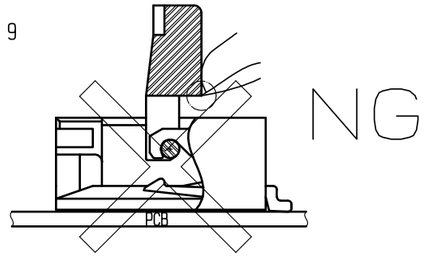

- Incorrect operation -

HRS DRAWING FOR REFERENCE

△3 <INSTRUCTION MANUAL(1)>

DRAWING NO.	EDC-380099-00-00
PART NO.	FH28K-*S-0.5SH
CODE NO.	CL586

△3 5/9

Mar.1.2024 Copyright 2024 HIROSE ELECTRIC CO., LTD. All Rights Reserved.
In case of consideration for using Automotive equipment / device which demand high reliability, kindly contact our sales window correspondents.

3. How to insert FPC/FFC

This connector has contact point on the bottom, insert the FPC/FFC with the exposed conductors face down.
This connector has Guide for positioning FPC/FFC, insert the FPC/FFC at about 10 degree angle to the PCB mounting surface.(example 10)
In case of using FPC/FFC without tabs, insert the FPC/FFC horizontally along the surface.

[Caution]
-Do not insert the FPC/FFC with the conductor surface face up.
-Insert the FPC/FFC properly to the very end.
-Do not insert the FPC/FFC at an angle.(example 11)
-Insert the FPC/FFC with the actuator opened.(example 12)
-Do not twist the FPC/FFC to up and down, right and left or an angle.(example 13)

Example 10

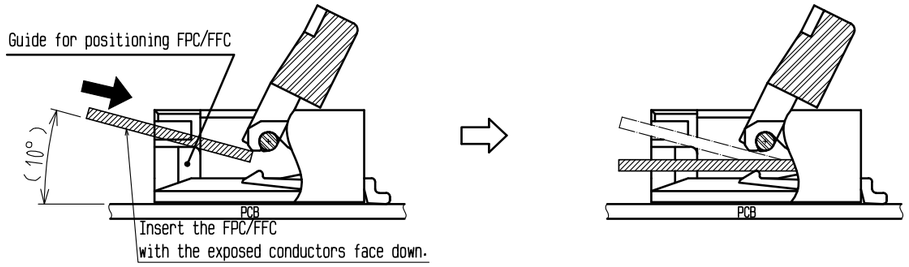

- Correct operation -

Example 11

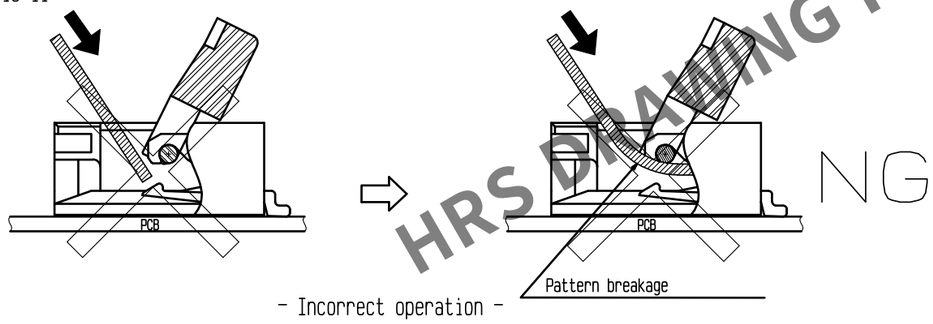

- Incorrect operation -

Example 12

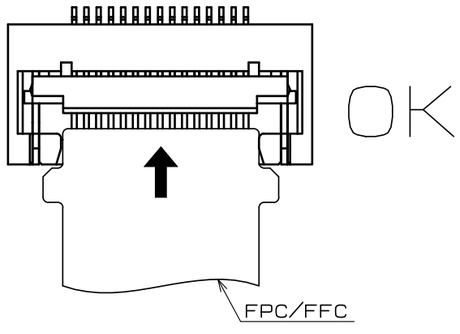

- Correct operation -

Example 13

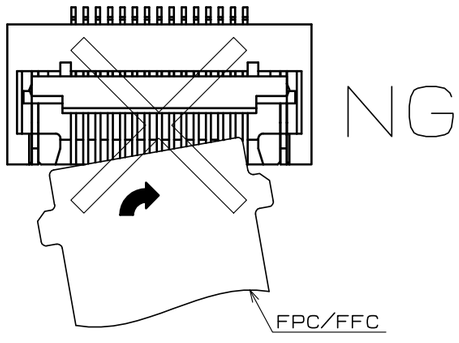

- Incorrect operation -

4. FPC/FFC insertion check

Guide for positioning FPC/FFC guide the FPC/FFC tabs to the correct position.
Make sure that the FPC/FFC tabs are located in correct position
as shown in the figure below after FPC/FFC insertion.(example 14)

[Caution]
-Do not insert the FPC/FFC at an angle and/or stop it before insertion is completed.(example 15, 16)

Example 14

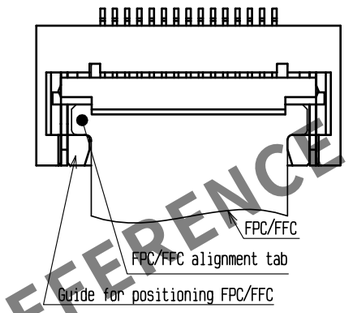

- Correct operation -

Example 15

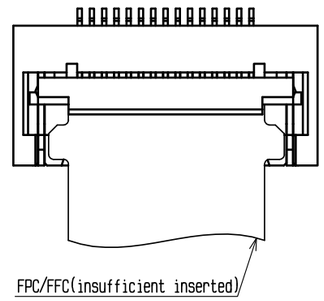

- Incorrect operation -

Example 16

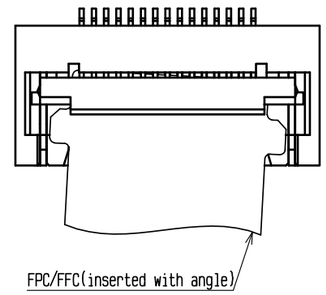

- Incorrect operation -

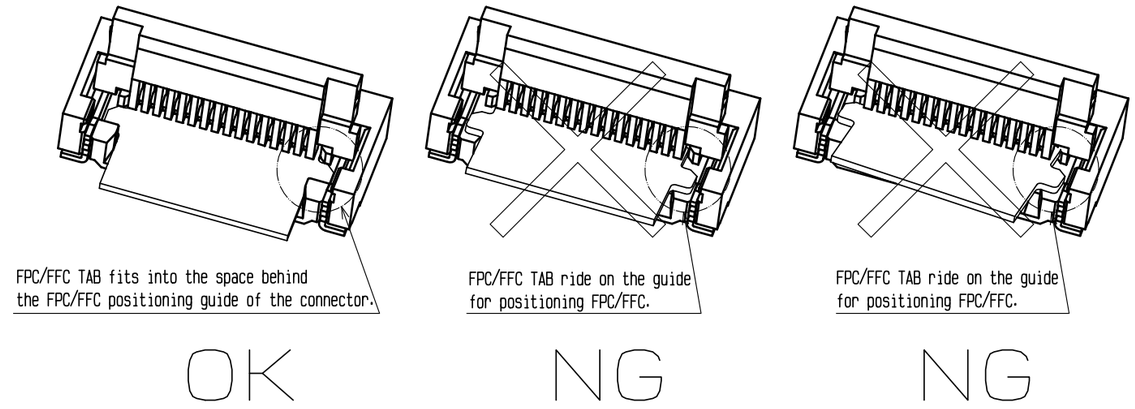

HRS DRAWING FOR REFERENCE

△3<INSTRUCTION MANUAL(2)>

HRS	DRAWING NO.	EDC-380099-00-00
	PART NO.	FH28K-*S-0.5SH
	CODE NO.	CL586 △3 6/9

Mar.1.2024 Copyright 2024 HIROSE ELECTRIC CO., LTD. All Rights Reserved.
In case of consideration for using Automotive equipment / device which demand high reliability, kindly contact our sales window correspondents.

5. How to lock

The actuator rotates on its axis as shown below.
Apply load to rotate the actuator after inserting the FPC/FFC. (example 17)

[Caution]
-Close the actuator by carefully operating it at the center. (example 18)
-Do not operate the actuator at one end only. (example 19)
-The actuator must be operated by hand only.
Do not insert any tools or fingernails into the connector.
-Do not try to rotate the actuator further towards the opening direction while it is fully open.
-Do not apply excessive force to the actuator other than force necessary for rotating the actuator.
-Do not attempt to dislodge the actuator.
-After the actuator is closed, the actuator should be parallel to the PCB mounting surface.

Example 17

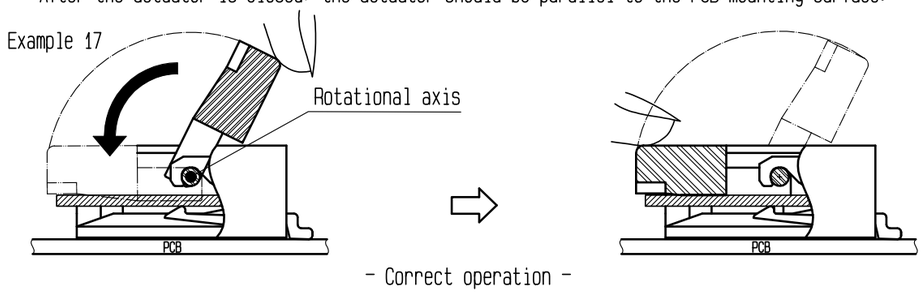

- Correct operation -

Example 18

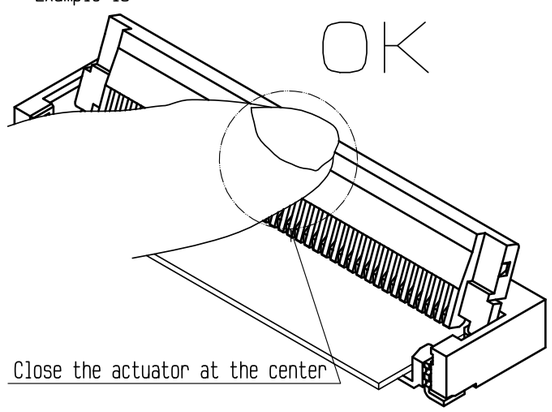

- Correct operation -

Example 19

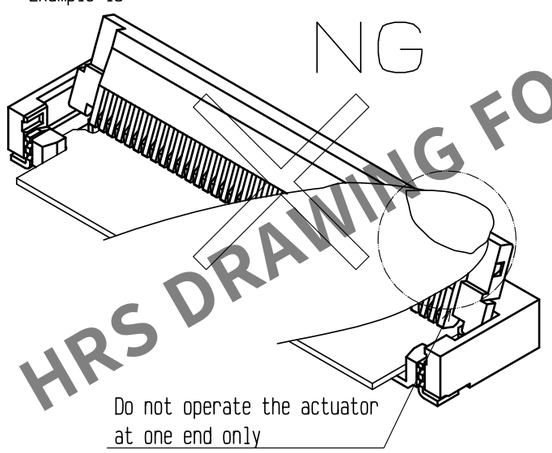

- Incorrect operation -

6. Mating confirmation of the FPC/FFC
After the actuator is closed, please check if the actuator is parallel to the PCB mounting surface.
Please keep the actuator stress free while it is near its 0° position.
Any extra stress on actuator may lead to contact deformation.

7. How to unlock

Slowly flip up the actuator to release the lock. (example 20)

[Caution]
-Open the actuator by carefully lifting it at the center. (example 21)
-Do not lift the actuator at one end only. (example 22)
-Do not apply excessive force to the actuator in the direction parallel to the actuator while unlocking the actuator.
-The actuator must be operated by hand only.
Do not insert any tools or fingernails into the connector.
-The actuator rotates 116 degrees max.
Do not try to rotate the actuator further towards the opening direction or apply any extra force to the actuator while it is fully open. (example 23)
-Do not attempt to dislodge the actuator. (example 24)

Example 20

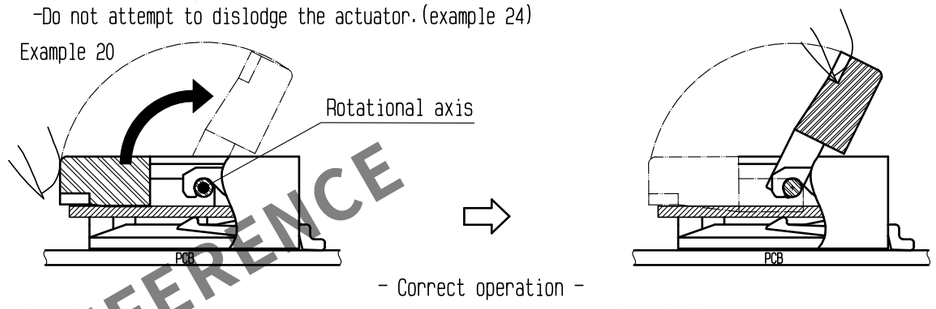

- Correct operation -

Example 21

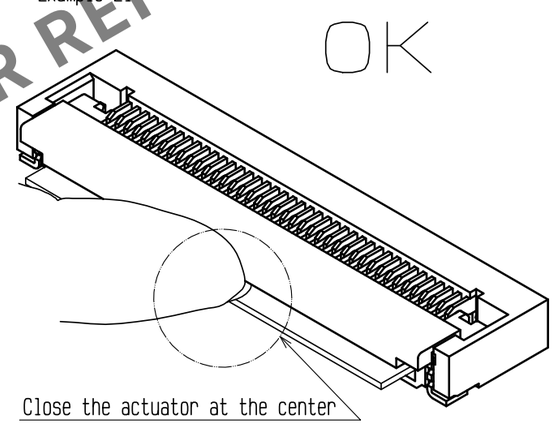

- Correct operation -

Example 22

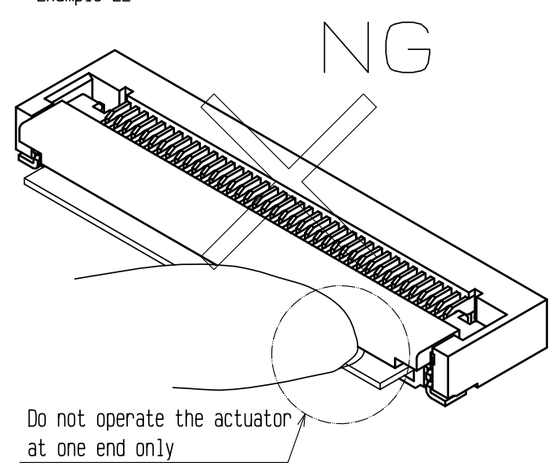

- Incorrect operation -

Example 23

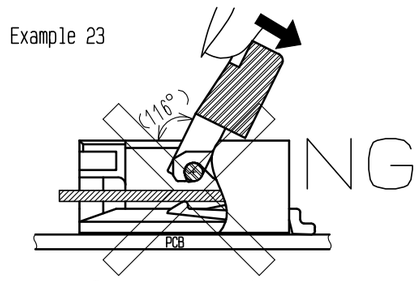

- Incorrect operation -

Example 24

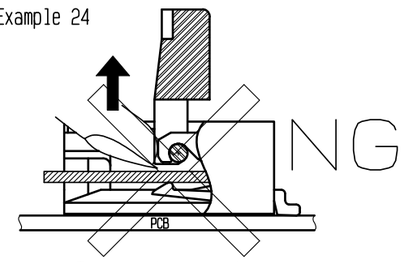

- Incorrect operation -

HRS DRAWING FOR REFERENCE

△3 <INSTRUCTION MANUAL(3)>

HRS	DRAWING NO.	EDC-380099-00-00
	PART NO.	FH28K-*S-0.5SH
	CODE NO.	CL586 △3 7/9

Mar.1.2024 Copyright 2024 HIROSE ELECTRIC CO., LTD. All Rights Reserved.
In case of consideration for using Automotive equipment / device which demand high reliability, kindly contact our sales window correspondents.

8. How to remove FPC/FFC

This connector has a FPC/FFC positioning structure for guiding the FPC/FFC into the right position while insertion.
After rotating the actuator to the fully open position, carefully withdraw the FPC/FFC
at about 10 degree angle to the PCB mounting surface.(example 25)
In case of using FPC/FFC without tabs, pull out the FPC/FFC horizontally along the PCB mounting surface.

[Caution]
-For FPC/FFC removal, do not pull out the FPC/FFC horizontally.
-Do not withdraw the FPC/FFC at extreme(inclined towards vertical) angle.(example 26)
-Do not attempt to pull the FPC/FFC without unlocking the actuator.(example 27)

Example 25

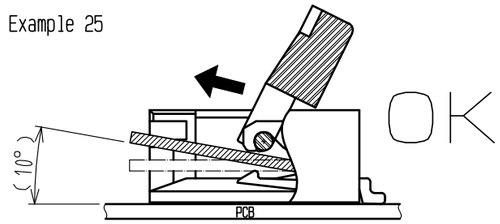

- Correct operation -

Example 26

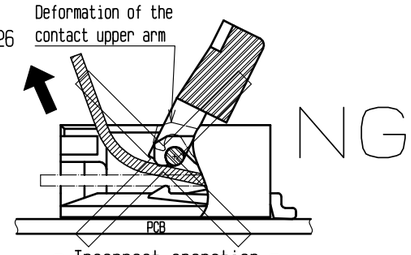

- Incorrect operation -

Example 27

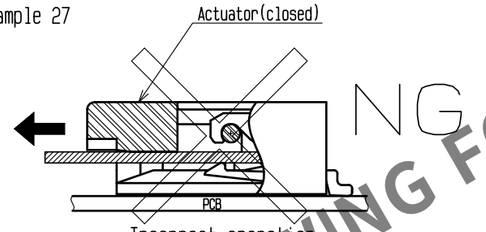

- Incorrect operation -

Example 28

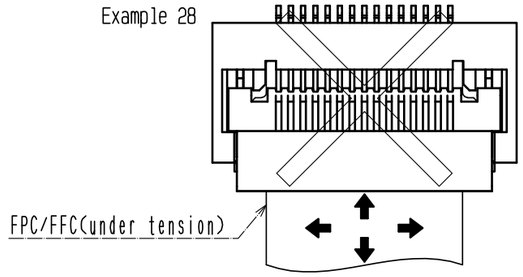

Example 29

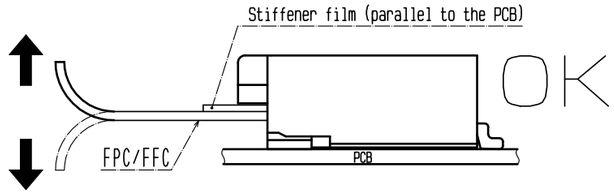

Example 30

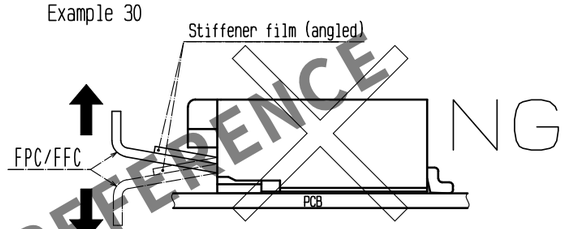

Example 31

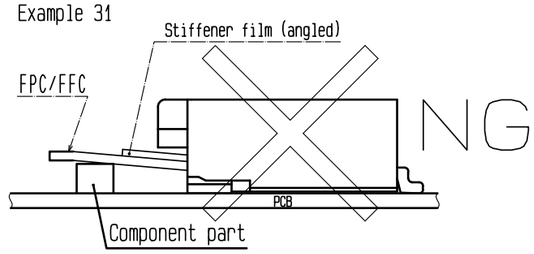

[Precautions for component layout]
While the FPC/FFC is under tension due to the connecting configuration, extra stress may be applied to the connector.
As a result, conduction failure may occur due to the extra stress.
In order to prevent such kind of conduction failure, please read through the following parts before making circuits/mechanism design.

[Caution]
-Avoid applying forces to/pulling the FPC/FFC along/perpendicular to the direction of FPC/FFC insertion.(example 28)
Avoid pushing/pulling the FPC/FFC upwards/downwards.
-If the FPC/FFC has to be curled/bended in your cabling design,
please keep enough degree of freedom in your design to keep the FPC/FFC tension free.
In this regard, the stiffener should be parallel to the PCB.(example 29)
-If the FPC/FFC has to be curled/bended in your cabling design, do not curl/bend the FPC/FFC area near the connector.
This may lead to conduction failure or FPC/FFC breakage.(example 30)
It is recommended to keep the FPC/FFC fixed to avoid applying stress through the FPC/FFC to the connector.
-Do not mount other components underneath the FPC/FFC stiffener which may interfere with the connection.(example 31)
-Follow the recommended FPC/FFC design.
Please consult with the FPC/FFC manufacturer about FPC/FFC bending performance and wire breakage strength while making design.
-Keep sufficient operating space for FPC/FFC insertion during layout design in order to avoid incorrect FPC/FFC insertion.
Please keep enough FPC/FFC length and component layout space for assembly during design process.
FPC/FFC with too short length may make the assembly difficult.
-Keep enough space for the rotation of the actuator during PCB and component layout design.
-Please consult with our sales representative if you are using FPC/FFC with different configuration from our recommendation.

[Instructions for mounting on the PCB]

Follow the instructions shown below when mounting on the PCB.

[Caution]
-Refer to recommended layouts on page 1 for PCB and stencil pattern.
-Using either narrower land pattern or wider stencil pattern than recommendation
may end up with excessive amount of solder/flux climbing on contact.
Please inspect the size of solder fillet and flux climbing height of the mounted connector
while using different land/stencil pattern from our recommendation.
-Clearance between the mounting surface of the connector contact lead and the bottom of the housing is
very small. Solder resist/silk screening applied underneath the connector may interfere with the connector.
This may lead to soldering defect/insufficient fillet formation.
Please verify your solder resist/silk screening design carefully before implementing the design.
-Apply reflow temperature profile within the specified conditions.
For specific applications, the recommended temperature may vary depending on
type/ volume/thickness of solder paste and size/thickness of PCB.
Please consult with your solder paste and equipment manufacturer for specific recommendations.
-Please try to minimize the warpage of the PCB. Soldering failure could still occur
due to the PCB warpage even if the coplanarity of the connecter is under 0.1mm.
-If the connector is mounting on FPC/FFC, please make sure to put a stiffener
on the backside of the FPC/FFC.
Recommended stiffner: Glass epoxy material with thickness of 0.3 mm MIN.
-Do not apply 1 N or greater external force on the connector when unreeling
or handling the connector before mounting.
Excessive mechanical stress may damage the connector before mounting.

HRS DRAWING FOR REFERENCE

Mar.1.2024 Copyright 2024 HIROSE ELECTRIC CO., LTD. All Rights Reserved.
In case of consideration for using Automotive equipment / device which demand high reliability, kindly contact our sales window correspondents.

HRS DRAWING FOR REFERENCE

[Instructions for PCB handling after mounting the connector]

Follow the instructions shown below when mounting on the PCB.

[Caution]
- ·Splitting a large PCB into several pieces
  ·Installing mounting screw on PCB
  During the assembly processes described above, care shall be taken so as not to give any stresses of deflection or twisting to the PCB.
  Stresses applied on PCB may damage the connector as well
- The warpage of a 100 mm wide PCB should remain within 0.5 mm .(example 32)
  The warpage of PCB may apply excessive stress on the connnector and damage the connector.
- Please perform conduction check with caution.Conductivity probe may damage the connector contacts.
- Attachment of foreign particles with the connector contact may lead to conduction failure.
  In this particular case, the conduction failure may be fixed by re-inserting the FPC/FFC.

Example 32

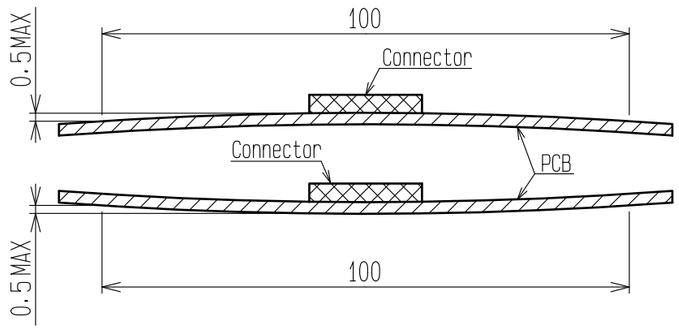

Example 33

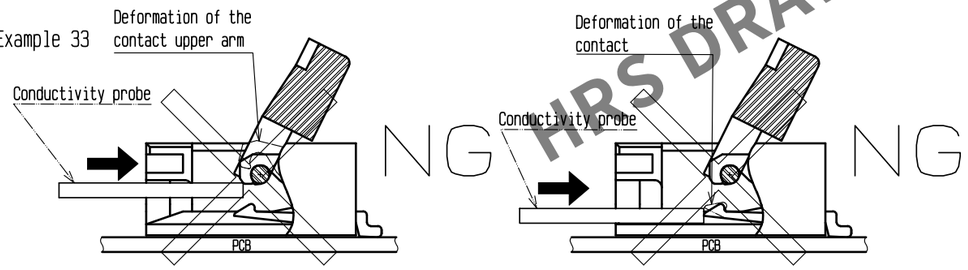

[Instructions on manual soldering]

Follow the instructions shown below when soldering the connector manually during repair work, etc.

[Caution]
- Do not perform manual soldering with the FPC/FFC inserted into the connector.
- Do not heat the connector excessively. Be very careful not to let the soldering iron touch any parts other than connector leads. Otherwise, the connector may be deformed or melted.
- Do not supply excessive solder (or flux).
  If excessive solder (or flux) is supplied on the contact lead, solder or flux may adhere to the contact point or rotating parts of the actuator, resulting in conduction failure or a rotation failure of the actuator.
  Supplying excessive solder to the metal fittings may hinder actuator rotation, resulting in breakage of the connector.

[Recommended reflow temperature profile]

The temperatures mentioned below refer to the PCB surface temperature near the connector contact leads.
For specific applications the recommended temperature may vary depending on solder paste type, volume/thickness and board size/thickness.
Please consult with your solder paste and equipment manufacturer for specific recommendations.
- Reflow method:IR reflow
- Number of reflow cycles:2 cycles MAX.

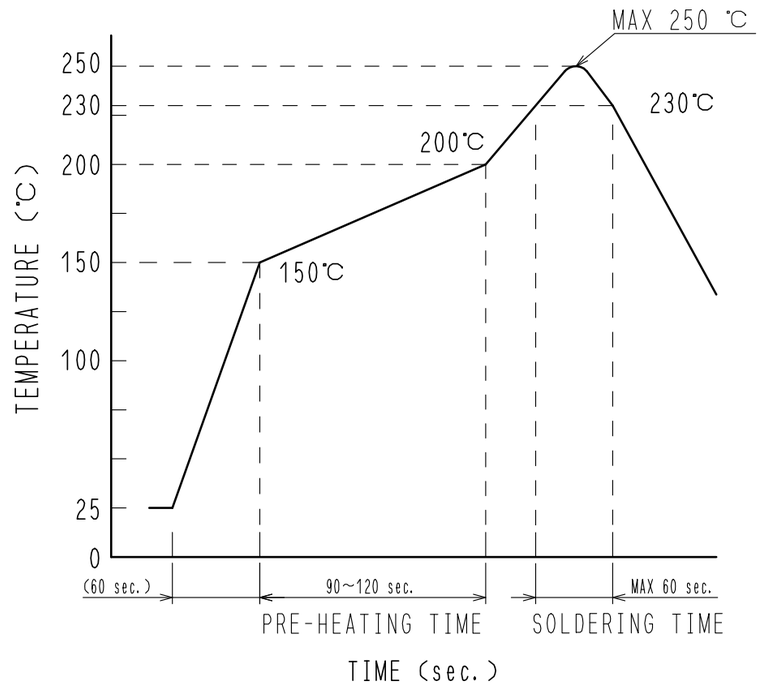

△3 <Recommended reflow temperature profile>

HRS	DRAWING NO.	EDC-380099-00-00
	PART NO.	FH28K-*S-0.5SH
	CODE NO.	CL586 △3 9/9