DWG NO.	SH	REV
C-NJYYEK-0099	1	4.0

TABLE 1	
AHSP P/N	LENGTH "A"
NJYYEK-0001	1000±20mm
NJYYEK-0002	2000±40mm [7]
NJYYEK-0004	1500±30mm [7]
NJYYEK-0007	1750±40mm [7]
NJYYEK-0006	500±15mm
NJYYEK-0008	750±15mm
NJYYEK-0009	1250±25mm [7]

REVISIONS

ZONE	REV.	ECN NUMBER	DESCRIPTION	BY	DATE	APPROVED
	2.0	MKHN-21072701	ADDED 0.75M LENGTH OPTION; ADDED NOTE 8 FOR LABEL QTY	M.HUSSAIN	07/27/2021	E.M
	3.0	MKHN-21120801	REVISED PCBA	M.HUSSAIN	12/08/2021	E.M
	4.0	ALII-22101601	ADDED NEW AHSP P/N"-0009"IN TABLE 1	D.YU	10/17/2022	A.LI

NOTE: ONLY THREE MOST RECENT RELEASED REVISIONS DISPLAYED.

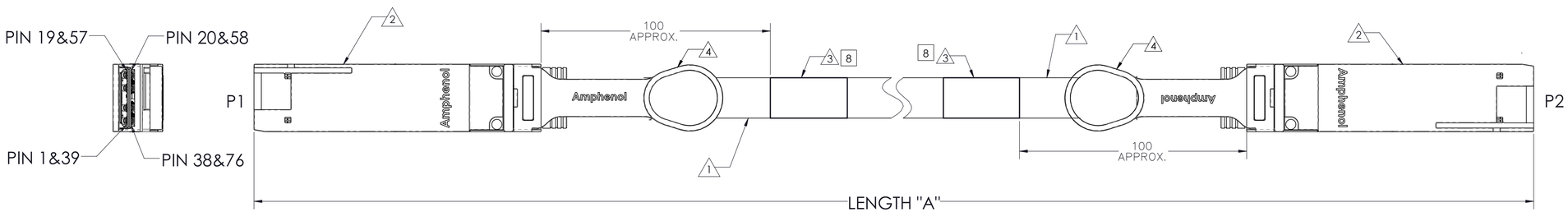

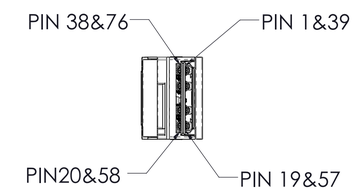

TABLE 2	
ITEM No.	DESCRIPTION
1	32 AWG, 16-PR(Ø6.1), VW1 PROTECTIVE PLASTIC NET COVERING WV-1 BLACK
2	PLUG, QSFP-DD, REFERENCE "QSFP-DD MSA"
3	LABEL, WRAPPED - AHSP P/N, REV, DATE CODE, LENGTH, CoO, SERIAL NUMBER & WEEE LOGO AND CE LOGO
4	PULL TAB, BLUE 2718
5	EEPROM - REFERENCE QSFP-DD MSA, PAGE A0 ONLY

NOTES:

1. THIS DRAWING IS RESERVED FOR AMPHENOL.
2. ASSEMBLIES SHALL BE COMPLIANT TO QSFP-DD MSA SPECIFICATION.
3. CABLE ASSEMBLIES, COMPONENTS AND SUB-COMPONENTS SHALL BE COMPLIANT TO EU DIRECTIVE 2011/65/EU-RoHS2.
4. CABLE ASSEMBLIES MUST MEET SHIELDING EFFECTIVENESS REQUIREMENTS OF 35DB MINIMUM FROM 1-10GHZ AND 30DB FROM 10-18 GHZ.
5. PACKAGE COMPLETED ASSY IN AN APPROPRIATELY SIZED ESD BAG.
6. UL LABEL MUST BE ON SHIPPING CARTON PER SUBJECT 764 OF THE UL COMPONENT WIRING HARNESS (ZPFW2) FILE #E86140. CSA LABEL MUST BE ON SHIPPING CARTON.

[7] LENGTHS ABOVE 1.0 METERS WOULD EXCEED IEEE802.3ck INSERTION LOSS LIMIT.

[8] LENGTHS LESS THAN 1.0 METERS ONLY REQUIRE ONE LABEL PLACED ON P1 END.

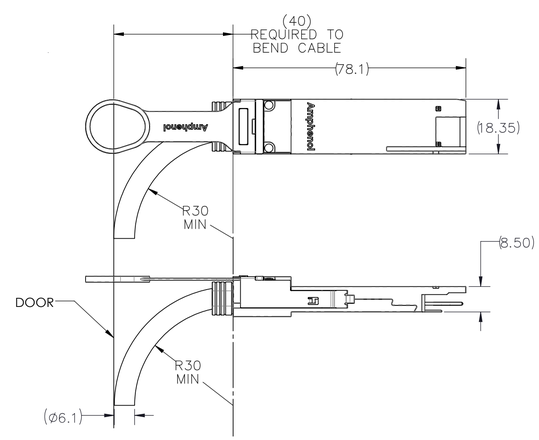

RADIUS FROM END OF DIECAST

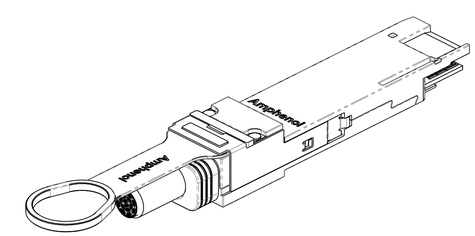

ISOMETRIC VIEW
SCALE: 3:2

TOLERANCES	
0.0	± 0.1
0.00	± 0.08
0.000	± —
ANGLES	± 1.0°

UNLESS OTHERWISE SPECIFIED DIMENSIONS ARE IN MM

DWN	06/02/2021 M.HUSSAIN
CHK	06/02/2021 M.HUSSAIN
APVD	06/07/2021 E.M

Amphenol AHSP
A Division of Amphenol Corporation
200 Innovative Way, Suite 201, Nashua, N.H. 03062 (603) 879-3000

TITLE: CABLE ASSY, QSFP-DD 112G PASSIVE 100Ω, 32AWG, DUAL DRAIN

INTERPRET PER ASME Y14.5

CUSTOMER USE DRAWING

CODE IDENT 31413

PART NO.	REV
SEE TABLE 1	N/A
DRAWING NO. C-NJYYEK-0099	REV 4.0

SIZE D | SCALE 2:1 | SHEET 1 OF 2

DWG NO. C-NJYYEK-0099 | SH 1 | REV 4.0

Amphenol RoHS 2011/65/EU

DWG NO.	SH	REV
C-NJYYEK-0099	2	4.0

REVISIONS

ZONE	REV.	ECN NUMBER	DESCRIPTION	BY	DATE	APPROVED
			SEE SHEET 1			

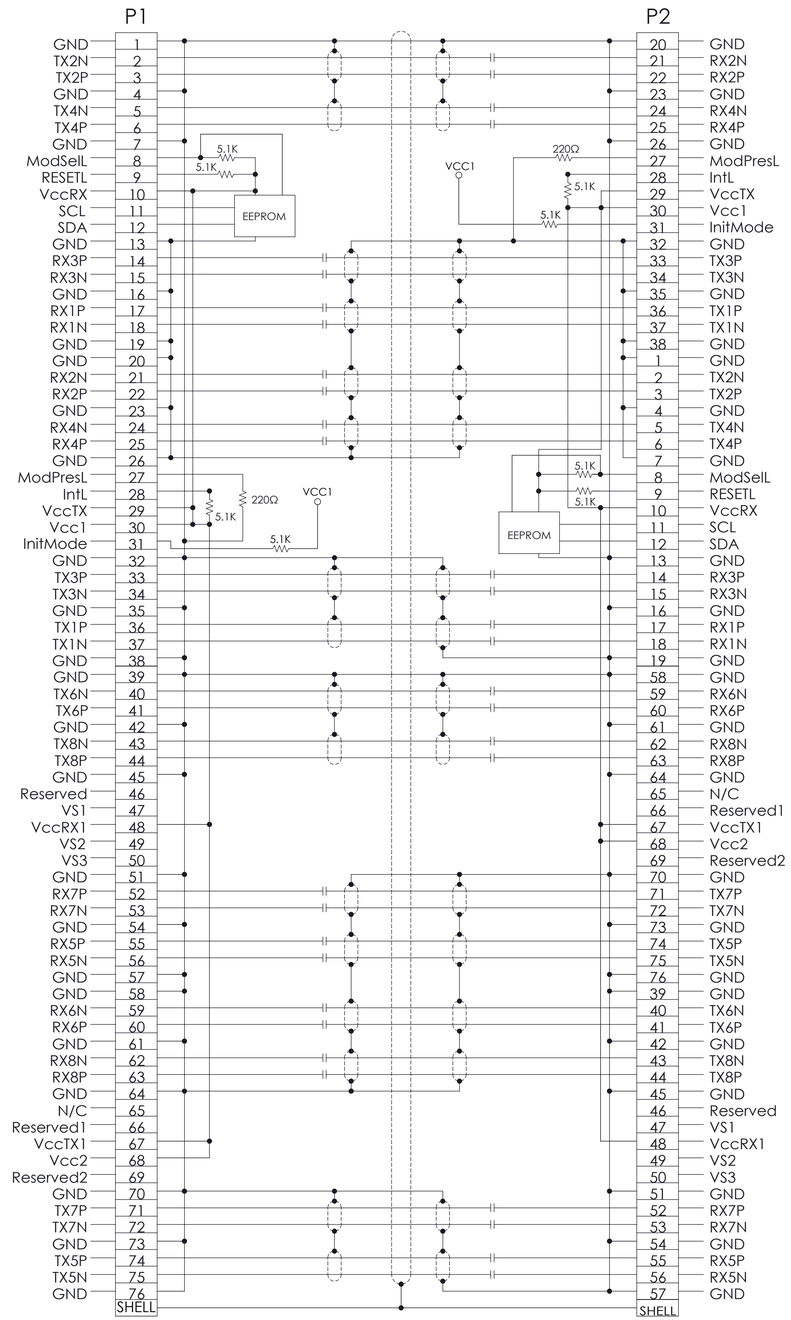

NOTE: DC BLOCKING CAP VALUE IS 100nF

TOLERANCES		DWN 06/02/2021 M.HUSSAIN
0.0	± 0.1	CHK 06/02/2021 M.HUSSAIN
0.00	± 0.08	APVD 06/07/2021 E.M
0.000	± —	
ANGLES	± 1.0°	

UNLESS OTHERWISE SPECIFIED DIMENSIONS ARE IN MM

Amphenol AHSP

A Division of Amphenol Corporation
200 Innovative Way, Suite 201, Nashua, N.H. 03062 (603) 879-3000

TITLE
CABLE ASSY, QSFP-DD 112G
PASSIVE 100Ω, 32AWG, DUAL DRAIN

INTERPRET PER ASME Y14.5

CUSTOMER USE DRAWING

CODE IDENT 31413

PART NO.	REV
SEE TABLE 1	N/A
DRAWING NO. C-NJYYEK-0099	REV 4.0

SIZE D | SCALE 1:1 | SHEET 2 OF 2

DWG NO. C-NJYYEK-0099 | SH 2 | REV 4.0