DWG NO.	SH	REV
C-NJYYE6-0099	1	8.0

TABLE 1	
AHSP P/N	LENGTH "A"
NJYYE6-0001	1000±20MM
NJYYE6-0002	2000±40MM
NJYYE6-0004	1500±30MM
NJYYE6-0005	2500±50MM [7]
NJYYE6-0007	1750±40MM
NJYYE6-0006	500±15MM [8]
NJYYE6-0003	3000±60MM [7]
NJYYE6-0009	3500±70MM [7]
NJYYE6-0012	1250±30MM
NJYYE6-0008	4000±80mm [7]
NJYYE6-0010	4500±100mm [7]
NJYYE6-0015	5000±100mm [7]
NJYYE6-0011	5500±120mm [7]
NJYYE6-0016	6000±120mm [7]

REVISIONS

ZONE	REV.	ECN NUMBER	DESCRIPTION	BY	DATE	APPROVED
	6.0	MKHN-22071401	ADDED 1.25 M LENGTH OPTION	M.HUSSAIN	07/14/2022	C.M
	7.0	ALII-22102501	ADDED 4.0 M LENGTH OPTION	D.YU	10/25/2022	A.LI
	8.0	DDYR-23022002	ADDED 4.5m,5m,5.5m,6m OPTION	N.ZENG	02/22/2023	C.M

NOTE: ONLY THREE MOST RECENT RELEASED REVISIONS DISPLAYED.

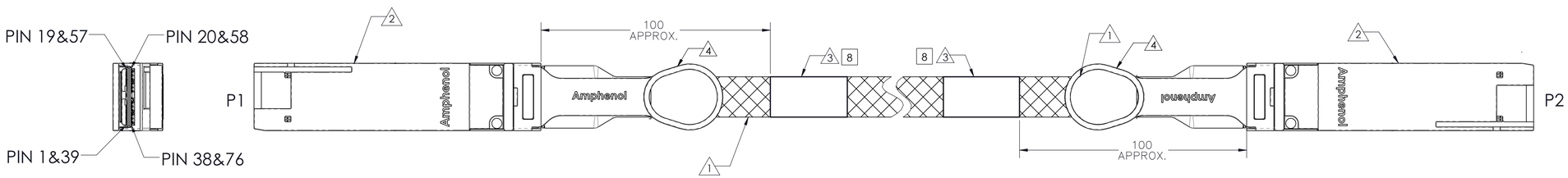

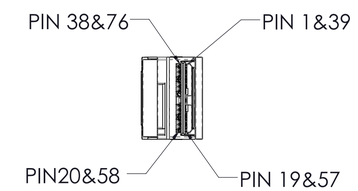

TABLE 2	
ITEM No.	DESCRIPTION
1	26 AWG, 16-PR (ø10.7), VW1 PROTECTIVE PLASTIC NET COVERING WV-1 BLACK
2	PLUG, QSFP-DD, REFERENCE "QSFP-DD MSA"
3	LABEL, WRAPPED - AHSP P/N, REV, DATE CODE, LENGTH, CoO, SERIAL NUMBER & WEEE LOGO AND CE LOGO
4	PULL TAB, BLUE 2718
5	EPROM - REFERENCE QSFP-DD MSA, PAGE A0 ONLY

NOTES:

1. THIS DRAWING IS RESERVED FOR AMPHENOL.
2. ASSEMBLIES SHALL BE COMPLIANT TO QSFP-DD MSA SPECIFICATION.
3. CABLE ASSEMBLIES, COMPONENTS AND SUB-COMPONENTS SHALL BE COMPLIANT TO EU DIRECTIVE 2011/65/EU-RoHS2.
4. CABLE ASSEMBLIES MUST MEET SHIELDING EFFECTIVENESS REQUIREMENTS OF 35DB MINIMUM FROM 1-10GHZ AND 30DB FROM 10-18 GHZ.
5. PACKAGE COMPLETED ASSY IN AN APPROPRIATELY SIZED ESD BAG.
6. UL LABEL MUST BE ON SHIPPING CARTON PER SUBJECT 764 OF THE UL COMPONENT WIRING HARNESS (ZPFW2) FILE #E86140. CSA LABEL MUST BE ON SHIPPING CARTON.

[7] LENGTHS ABOVE 2.0 METERS WOULD EXCEED IEEE802.3ck INSERTION LOSS LIMIT.

[8] LENGTHS LESS THAN 1.0 METERS ONLY REQUIRE ONE LABEL PLACED ON P1 END.

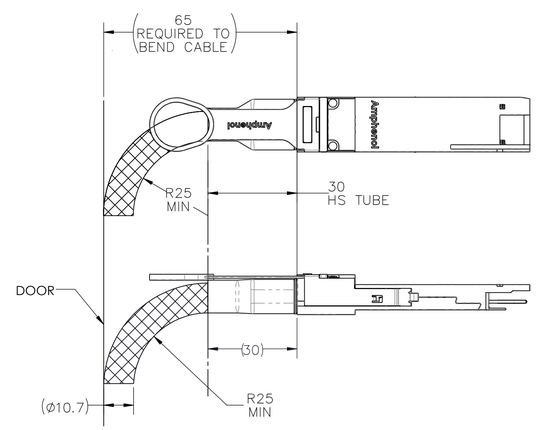

RADIUS FROM END OF DIECAST

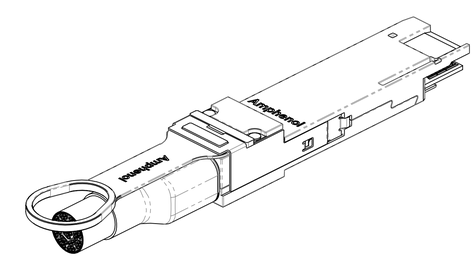

ISOMETRIC VIEW
SCALE: 3:2

TOLERANCES	
0.0	± 0.25
0.00	± 0.08
0.000	± —
ANGLES	± 1.0°

UNLESS OTHERWISE SPECIFIED DIMENSIONS ARE IN MM

DWN	06/02/2021	M.HUSSAIN
CHK	06/02/2021	M.HUSSAIN
APVD	06/07/2021	E.M

Amphenol AHSP

A Division of Amphenol Corporation
200 Innovative Way, Suite 201, Nashua, N.H. 03062 (603) 879-3000

TITLE: CABLE ASSY, QSFP-DD 112G PASSIVE 100Ω, 26AWG, DUAL DRAIN

INTERPRET PER ASME Y14.5

CODE IDENT 31413

CUSTOMER USE DRAWING

PART NO.	REV
SEE TABLE 1	N/A
DRAWING NO. C-NJYYE6-0099	REV 8.0

SIZE D | SCALE 2:1 | SHEET 1 OF 2

DWG NO. C-NJYYE6-0099 | SH 1 | REV 8.0

AHSP_szD_mm.drwdot Rev01/201409

DWG NO.	SH	REV
C-NJYYE6-0099	2	8.0

REVISIONS

ZONE	REV.	ECN NUMBER	DESCRIPTION	BY	DATE	APPROVED
			SEE SHEET 1			

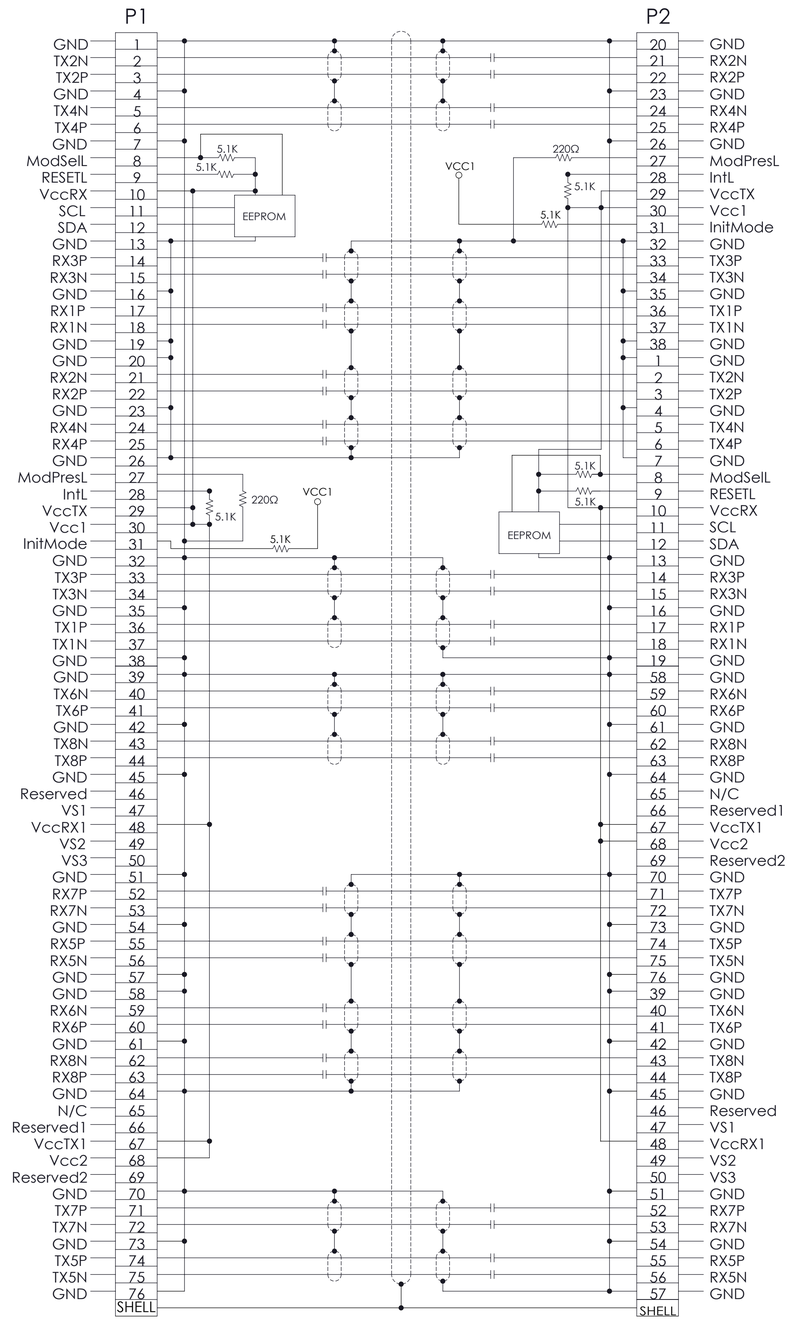

NOTE: DC BLOCKING CAP VALUE IS 100nF

TOLERANCES		DWN	06/02/2021 M.HUSSAIN
0.0	± 0.25	CHK	06/02/2021 M.HUSSAIN
0.00	± 0.08	APVD	06/07/2021 E.M
0.000	± —		
ANGLES	± 1.0°		

UNLESS OTHERWISE SPECIFIED DIMENSIONS ARE IN MM

INTERPRET PER ASME Y14.5

CODE IDENT 31413

CUSTOMER USE DRAWING

Amphenol AHSP

A Division of Amphenol Corporation

200 Innovative Way, Suite 201, Nashua, N.H. 03062 (603) 879-3000

TITLE: CABLE ASSY, QSFP-DD 112G PASSIVE 100Ω, 26AWG, DUAL DRAIN

PART NO.	REV
SEE TABLE 1	N/A
DRAWING NO. C-NJYYE6-0099	REV 8.0

SIZE D | SCALE 1:1 | SHEET 2 OF 2

DWG NO. C-NJYYE6-0099 | SH 2 | REV 8.0

AHSP_szD_mm.drwdot Rev01/201409