NO. OF CIRCUITS	PART NO.	ENGINEERING NO.	DIM "A" MM	DIM "B" MM
2	2213920002	MX-TLM-405AA-02	16.00	7.50
3	2213920003	MX-TLM-405AA-03	23.50	15.00
4	2213920004	MX-TLM-405AA-04	31.00	22.50
5	2213920005	MX-TLM-405AA-05	38.50	30.00
6	2213920006	MX-TLM-405AA-06	46.00	37.50
7	2213920007	MX-TLM-405AA-07	53.50	45.00
8	2213920008	MX-TLM-405AA-08	61.00	52.50
9	2213920009	MX-TLM-405AA-09	68.50	60.00
10	2213920010	MX-TLM-405AA-10	76.00	67.50
11	2213920011	MX-TLM-405AA-11	83.50	75.00
12	2213920012	MX-TLM-405AA-12	91.00	82.50

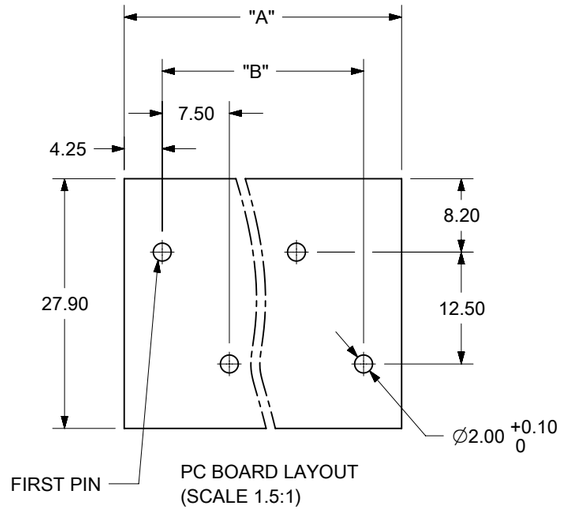

PC BOARD LAYOUT
(SCALE 1.5:1)

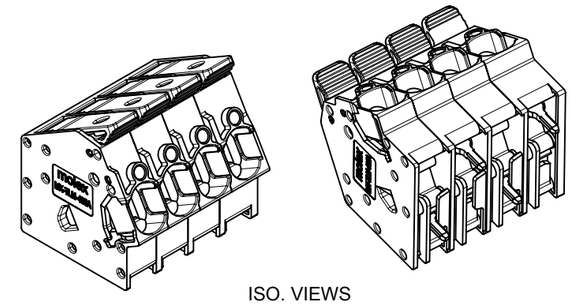

ISO. VIEWS
(SCALE 1:1)

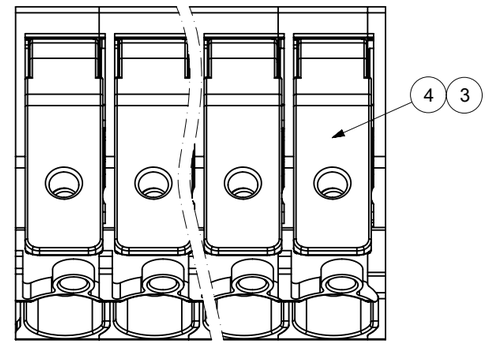

MATERIALS	
1. FIRST HOUSING	PA66 UL94 V-0 (GREEN)
2. LAST HOUSING	PA66 UL94 V-0 (GREEN)
3. ROTATING BRACKET	PA66 UL94 V-0 (BLACK)
4. LEVER	PA66 UL94 V-0 (ORANGE)
5. COVER	PA66 UL94 V-0 (GREEN)
6. SPRING	STAINLESS STEEL
7. FRONT TERMINAL	TIN PLATED COPPER ALLOY
8. REAR TERMINAL	TIN PLATED COPPER ALLOY

ELECTRICAL, MECHANICAL AND THERMAL RATINGS	
MAXIMUM VOLTAGE	600V (PER UL GROUP B, C & D)
	1000V (PER UL GROUP F*)
MAXIMUM CURRENT	38A (PER UL GROUP B, C & F)
	15A (PER UL GROUP D FOR 51 TO 150V)
	10A (PER UL GROUP D FOR 151 TO 300V)
	5A (PER UL GROUP D FOR 301 TO 600V)
WIRE RANGE	8 TO 24 AWG (SOLID OR STRANDED)
INSULATION RESISTANCE	500MΩ OR MORE AT 500V DC
WITHSTAND VOLTAGE	2200V PER 1 MINUTE
WIRE STRIP LENGTH	12mm TO 13mm
OPERATING TEMPERATURE	-40°C TO +115°C

*1000V MAX. IS ACCEPTABLE AS TERMINAL BLOCK SPACING REQUIREMENTS WERE DETERMINED BASED ON USE IN CIRCUITS WHERE AN ALTERNATIVE SPACING INVESTIGATION WAS CONDUCTED IN ACCORDANCE WITH UL 508 (INDUSTRIAL CONTROL EQUIPMENT) AND UL 508C (POWER CONVERSION EQUIPMENT).

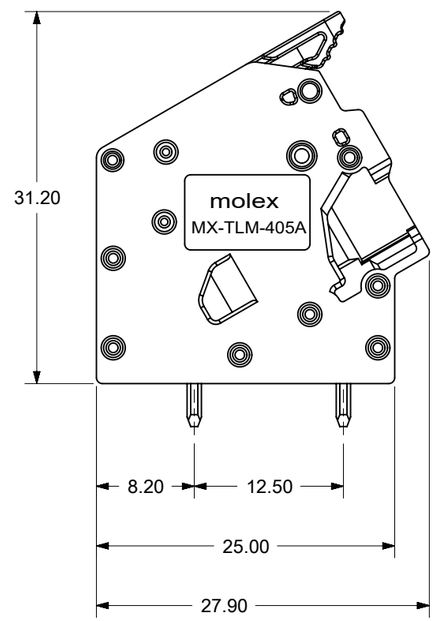

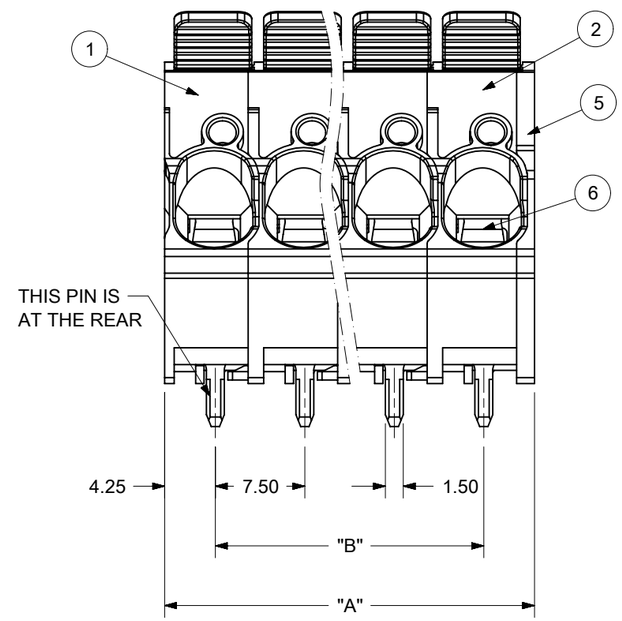

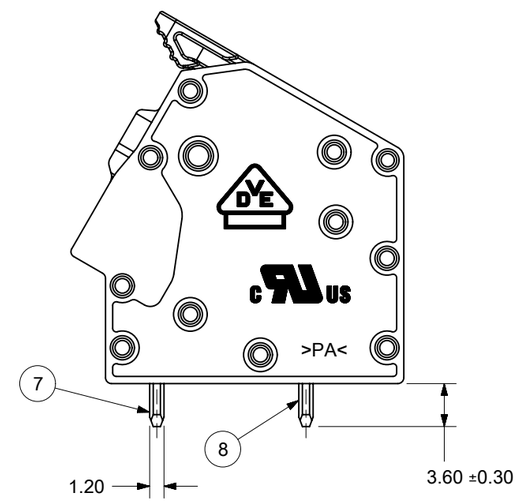

TOTAL PITCH TOLERANCE IN MM									NOMINAL DIMENSION RANGE IN MM								
0 to 30	31 to 53	54 to 70	71 to 90	91 to 115	116 to 150	151 to 200	201 to 250	251 to 320	0 to 30	31 to 53	54 to 70	71 to 90	91 to 115	116 to 150	151 to 200	201 to 250	251 to 320
±0.20	±0.25	±0.30	±0.35	±0.44	±0.55	±0.70	±0.85	±1.00	±0.25	±0.30	±0.35	±0.44	±0.55	±0.70	±0.80	±0.90	±1.20

DOCUMENT STATUS	P1	RELEASE DATE	2024/04/24 21:49:31

FORMAT: master-lb-
REVISION: J1
DATE: 2021/05/01

FUNCTIONAL SYMBOLS: FA = 0, FC = 0, FD = 0
DIVISIONAL SYMBOLS

THIS DRAWING CONTAINS INFORMATION THAT IS PROPRIETARY TO MOLEX ELECTRONIC TECHNOLOGIES, LLC AND SHOULD NOT BE USED WITHOUT WRITTEN PERMISSION

DIMENSION UNITS	SCALE
mm	2:1

GENERAL TOLERANCES (UNLESS SPECIFIED)		
ANGULAR TOL	±	---
4 PLACES	±	---
3 PLACES	±	---
2 PLACES	±	---
1 PLACE	±	---
0 PLACES	±	---

DRAFT WHERE APPLICABLE MUST REMAIN WITHIN DIMENSIONS

CURRENT REV DESC: UPDATED TOP VIEW & ISO VIEW.

EC NO: 762493
DRWN: ABENJAMINLW 2024/03/26
CHK'D: DNGUYEN62 2024/04/24
APPR: WLEUNG 2024/04/24

INITIAL REVISION:
DRWN: ABENJAMINLW 2022/08/01
APPR: WLEUNG 2023/10/17

THIRD ANGLE PROJECTION | DRAWING: B-SIZE | SERIES: 221392

molex

7.50MM 30 DEGREE CLAMP
TERMINAL BLOCK, LEFT REAR TERMINAL

PRODUCT CUSTOMER DRAWING

DOCUMENT NUMBER	DOC TYPE	DOC PART	REVISION
2213920002	PSD	000	B

MATERIAL NUMBER	CUSTOMER	SHEET NUMBER
SEE CHART	GENERAL MARKET	1 OF 1