NO. OF CIRCUITS	PART NO.	ENGINEERING NO.	DIM "A" MM	DIM "B" MM
1	2249300001	MX-TLM-705A-01	11.50	N/A
2	2249300002	MX-TLM-705A-02	21.50	10.00
3	2249300003	MX-TLM-705A-03	31.50	20.00
4	2249300004	MX-TLM-705A-04	41.50	30.00
5	2249300005	MX-TLM-705A-05	51.50	40.00
6	2249300006	MX-TLM-705A-06	61.50	50.00
7	2249300007	MX-TLM-705A-07	71.50	60.00
8	2249300008	MX-TLM-705A-08	81.50	70.00
9	2249300009	MX-TLM-705A-09	91.50	80.00
10	2249300010	MX-TLM-705A-10	101.50	90.00
11	2249300011	MX-TLM-705A-11	111.50	100.00
12	2249300012	MX-TLM-705A-12	121.50	110.00

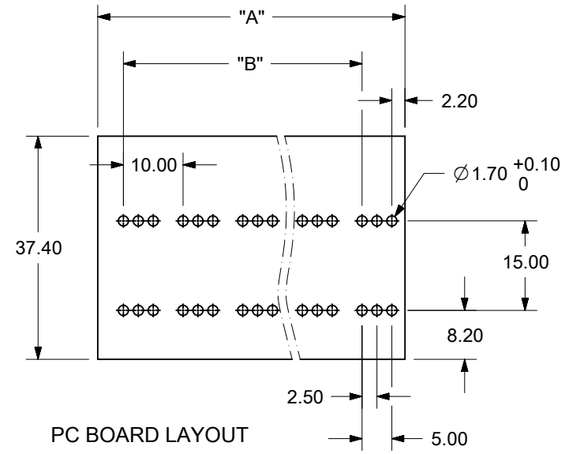

PC BOARD LAYOUT

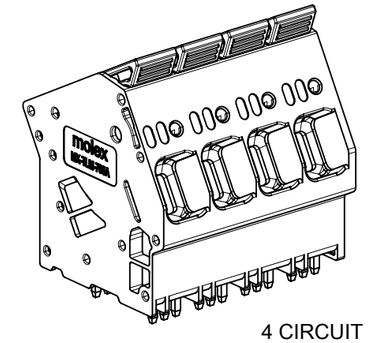

4 CIRCUIT SHOWN

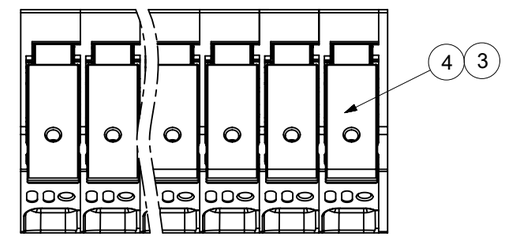

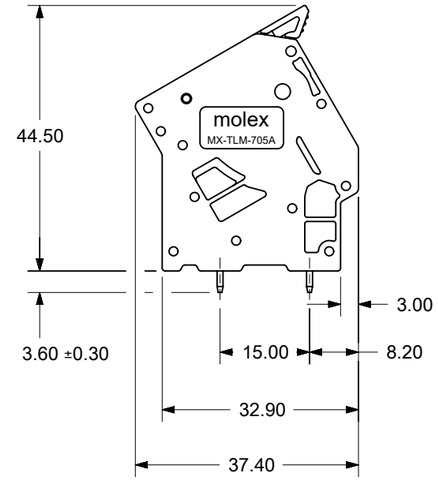

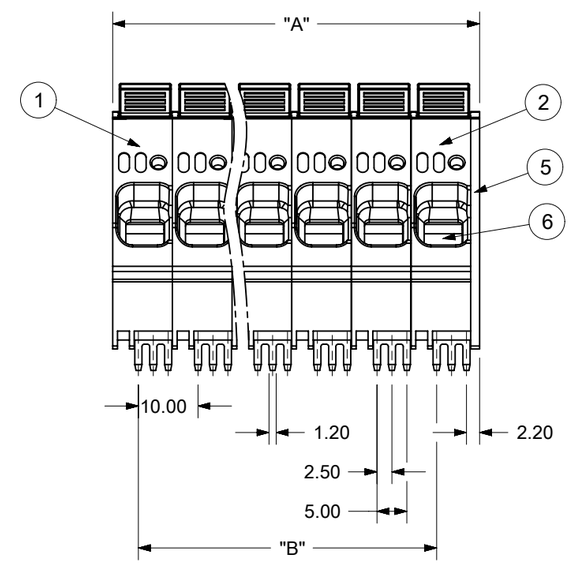

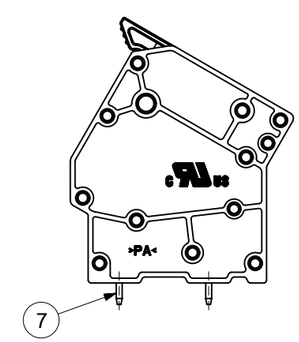

MATERIALS	
1. FIRST HOUSING	PA66 UL94 V-0 (GREEN)
2. LAST HOUSING	PA66 UL94 V-0 (GREEN)
3. ROTATING BRACKET	PA66 UL94 V-0 (BLACK)
4. LEVER	PA66 UL94 V-0 (ORANGE)
5. COVER	PA66 UL94 V-0 (GREEN)
6. SPRING	STAINLESS STEEL
7. TERMINAL	TIN PLATED COPPER ALLOY
ELECTRICAL, MECHANICAL AND THERMAL RATINGS	
MAXIMUM VOLTAGE	150V (PER UL GROUP C)
	300V (PER UL GROUP B)
	320V (PER UL GROUP F**)
	600V (PER UL GROUP B*, C* & D)
	1000V (PER UL GROUP F**)
MAXIMUM CURRENT	72A (PER UL GROUP B, C & F)
	15A (PER UL GROUP D FOR 51 TO 150V)
	10A (PER UL GROUP D FOR 151 TO 300V)
	5A (PER UL GROUP D FOR 301 TO 600V)
WIRE RANGE	4 TO 18 AWG (SOLID OR STRANDED)
INSULATION RESISTANCE	500MΩ OR MORE AT 500VDC
WITHSTAND VOLTAGE	1600V PER 1 MINUTE
WIRE STRIP LENGTH	18mm TO 20mm
OPERATING TEMPERATURE	-40°C TO +115°C

*FOR PN 2249300001, 600V MAX. IS ACCEPTABLE FOR UL GROUP B&C PROVIDED THE MINIMUM SPACINGS OF THROUGH AIR IS 9.5mm AND OVER SURFACE IS 12.7mm SHALL BE MAINTAINED BETWEEN UNINSULATED LIVE PARTS OF OPPOSITE POLARITY; AND BETWEEN AN UNINSULATED LIVE PART AND A GROUNDED PART INCLUDING ANY MOUNTING SURFACE OR EXPOSED METAL PART.

**FOR PN 2249300001, 1000V MAX. IS ACCEPTABLE AND FOR PN'S 2249300002 THRU 2249300012, 320V IS ACCEPTABLE AS TERMINAL BLOCK SPACING REQUIREMENTS WERE DETERMINED BASED ON USE IN A CIRCUIT (OR CIRCUITS) WHERE AN ALTERNATIVE SPACING INVESTIGATION WAS CONDUCTED IN ACCORDANCE WITH UL 509 (INDUSTRIAL CONTROL EQUIPMENT) AND UL 508C (POWER CONVERSION EQUIPMENT).

TOTAL PITCH TOLERANCE IN MM									NOMINAL DIMENSION RANGE IN MM								
0 to 30	31 to 53	54 to 70	71 to 90	91 to 115	116 to 150	151 to 200	201 to 250	251 to 320	0 to 30	31 to 53	54 to 70	71 to 90	91 to 115	116 to 150	151 to 200	201 to 250	251 to 320
±0.20	±0.25	±0.30	±0.35	±0.44	±0.55	±0.70	±0.85	±1.00	±0.25	±0.30	±0.35	±0.44	±0.55	±0.70	±0.80	±0.90	±1.20

DOCUMENT STATUS	P1	RELEASE DATE	2024/04/24 21:49:32

FORMAT: master-B-size
REVISION: J1
DATE: 2021/05/01

THIS DRAWING CONTAINS INFORMATION THAT IS PROPRIETARY TO MOLEX ELECTRONIC TECHNOLOGIES, LLC AND SHOULD NOT BE USED WITHOUT WRITTEN PERMISSION

FUNCTIONAL SYMBOLS: F/A = 0, F/C = 0, F/D = 0
DIVISIONAL SYMBOLS

DIMENSION UNITS: mm
SCALE: 1:1
GENERAL TOLERANCES (UNLESS SPECIFIED)

ANGULAR TOL	±	---
4 PLACES	±	---
3 PLACES	±	---
2 PLACES	±	---
1 PLACE	±	---
0 PLACES	±	---

DRAFT WHERE APPLICABLE MUST REMAIN WITHIN DIMENSIONS

CURRENT REV DESC: NEW RELEASE
EC NO: 762493
DRWN: ABENJAMINLW 2023/09/05
CHK'D: DNGUYEN62 2024/04/24
APPR: WLEUNG 2024/04/24
INITIAL REVISION:
DRWN: ABENJAMINLW 2023/09/05
APPR: WLEUNG 2024/04/24

THIRD ANGLE PROJECTION
DRAWING: B-SIZE
SERIES: 224930

molex

10.00MM 35 DEGREE CLAMP
TERMINAL BLOCK, WITH BUSSED TERMINALS

PRODUCT CUSTOMER DRAWING

DOCUMENT NUMBER	DOC TYPE	DOC PART	REVISION
2249300002	PSD	000	A

MATERIAL NUMBER	CUSTOMER	SHEET NUMBER
SEE CHART	GENERAL MARKET	1 OF 1