© – TE Connectivity. All Rights Reserved.

REVISIONS					
P	LTR	DESCRIPTION	DATE	DWN	APVD
	A	ECN–24–280748; ADDED VSWR; GTP	21AUG2024	TP	WH

NOTES:

ALL DIMENSIONS ARE NOMINAL FOR REFERENCE ONLY UNLESS OTHERWISE STATED.

RoHS: COMPLIANT.

SPECIFICATIONS:

IMPEDANCE: 50Ω

FREQUENCY: DC to 18GHz

VSWR: <1.35

CONTACT RESISTANCE:
CENTER: <2.0 milliohms.
OUTER: <2.0 milliohms.

VOLTAGE RATING: 335 V (rms)

DIELECTRIC WITHSTANDING VOLTAGE: >1000V

INSULATION RESISTANCE: >10000mΩ

MECHANICAL CHARACTERISTICS

CENTER CONTACT RETENTION FORCE: >6 lbs

DURABILITY: >500 CYCLES.

ENVIRONMENTAL PARAMETER

TEMPERATURE RANGE: –40°C TO +165°C

THERMAL SHOCK: MIL–STD 202,METH.107,COND.B

VIBRATION: MIL–STD 202,METH.204,COND.D

SHOCK :MIL–STD 202,METH.213,COND.I

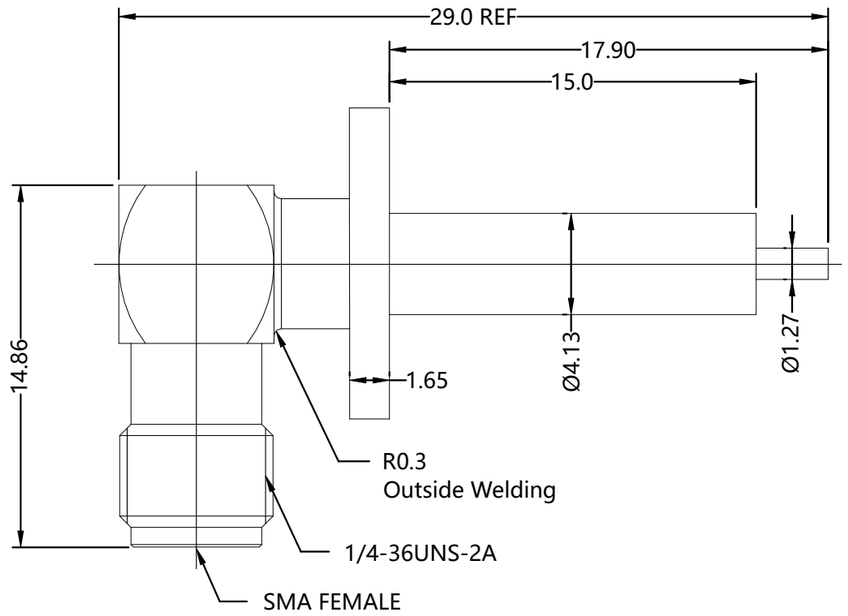

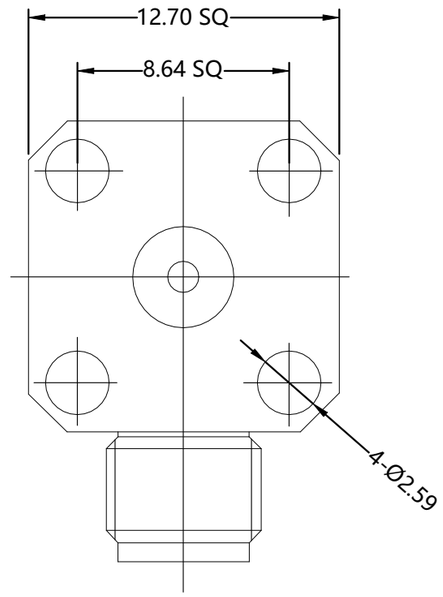

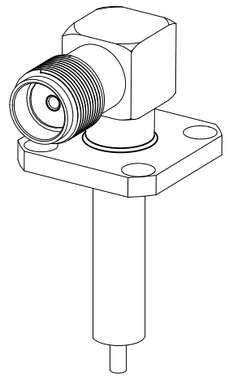

NOTES:
FINISH (PLATING THICKNESS IN MICRO–INCHES)

1 GOLD PL. 35u"/NICKEL PL. 145u"
2 GOLD PL. 50u"/NICKEL PL. 50u"/COPPER PL 10u"

	1	NOTE 2	Be–Cu–C17300	CONTACT PIN	3
	1	NATURAL	PTFE ASTM–D–1710	INSULATOR	2
	1	NOTE 1	STAINLESS STEEL	BODY	1
	2486508–1	FINISH/PLATING	MATERIAL	DESCRIPTION	ITEM
QUANTITY PER ASSY		PARTS LIST			

THIS DRAWING IS A CONTROLLED DOCUMENT.

DIMENSIONS: mm

TOLERANCES UNLESS OTHERWISE SPECIFIED:
0 PLC ± 0.3
1 PLC ± 0.2
2 PLC ± 0.1
3 PLC ± 0.05
4 PLC ± –
ANGLES ± 5

MATERIAL: SEE TABLE

FINISH: –

DWN TP 02MAY2024
CHK TP 02MAY2024
APVD WH 02MAY2024
PRODUCT SPEC: SEE NOTES
APPLICATION SPEC: —
WEIGHT: 2.91 g

TE Connectivity

NAME: SMA JACK RA SS H–FREQ 6 GHZ 4–HOLE FLG
–
–

SIZE	CAGE CODE	DRAWING NO	RESTRICTED TO
A3	00779	C–2486508	—

CUSTOMER DRAWING

SCALE	SHEET	REV
1:1	1 OF 1	A