© 2022 TE Connectivity. All Rights Reserved.

REVISIONS					
P	LTR	DESCRIPTION	DATE	DWN	APVD
		ECN-24-281137	23-AUG-24	BLU	ZHOU.ZZ

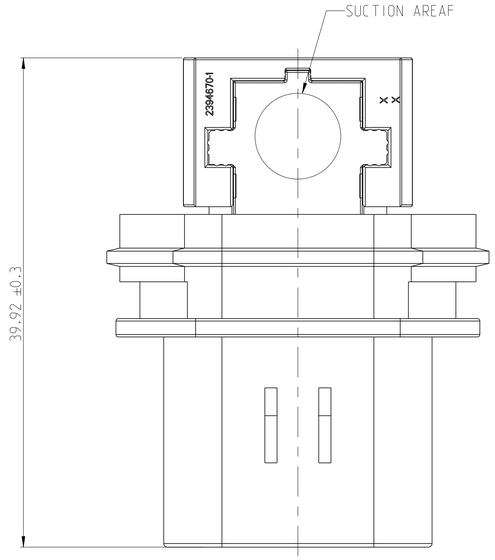

1. PACKAGING:TRAY.
2. ALL DEMENSIONS (IN BRACKNETS) FOR INFORMATION ONLY.

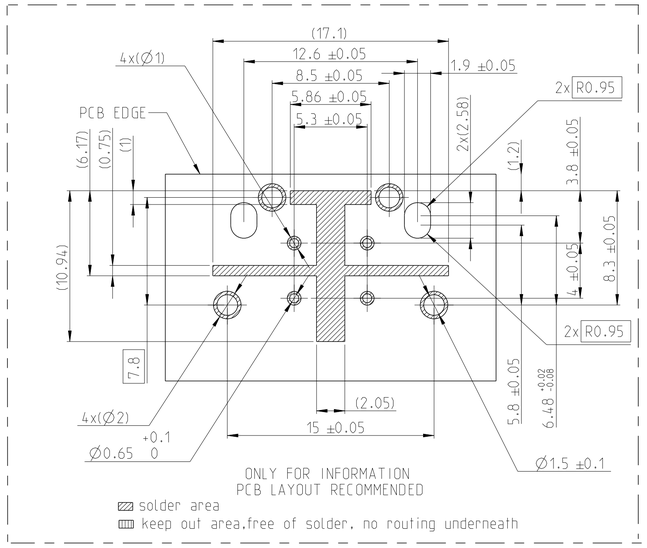

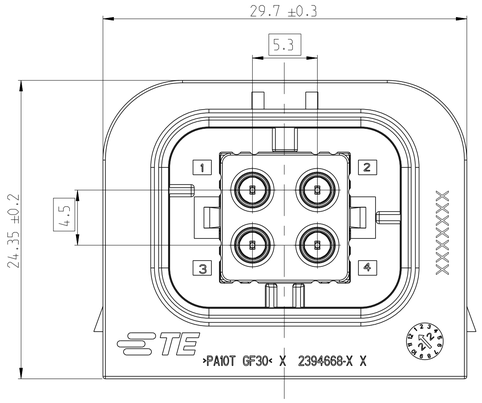

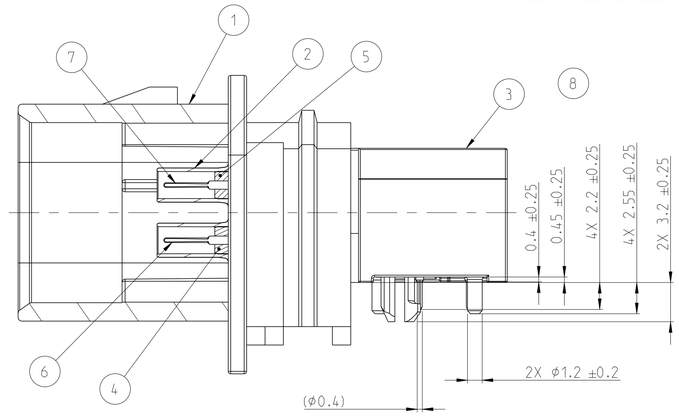

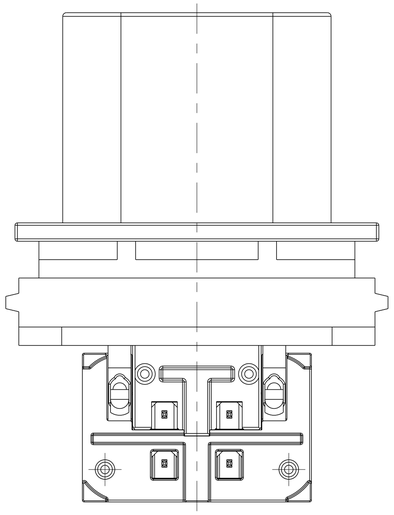

2						CONTACT PIN(LONG)	COPPER ALLOY	SOLDED DIDE: 3μm MIN. Sn OVER Ni INTERFACE SIDE: 2μm MIN. Ag OVER Ni	7
2						CONTACT PIN(SHORT)			6
2						CAVITY BLOCK(LONG)	LCP	BLACK	5
2						CAVITY BLOCK(SHORT)	LCP		4
1						SHIELDING HOUSING(COVE)	Zn ALLOY	3μm MIN. Sn OVER Ni	3
1						SHIELDING HOUSING (OUTSIDE)			2
					1	CODING HOUSING	PA10T	Black	1
				1				Black	
			1					Beige	
		1						Signal Blue	
	1							Claret Violet	
1								WATER BLUE	
QUANTITY						CODE	DESCRIPTION	MATERIAL	FINISH & COLOR	ITEM NO.
-1	-2	-3	-4	-5	-6	ASSY CODE				
A	B	C	D	A	B					
B	B	B	B	B	B	REVISION				

CODINGS.STANDARD ORIENTATION

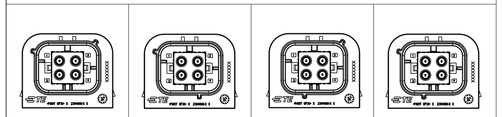

CODING A	CODING B	CODING C	CODING D

THIS DRAWING IS A CONTROLLED DOCUMENT.

DIMENSIONS: mm

TOLERANCES UNLESS OTHERWISE SPECIFIED:
0 PLC ±
1 PLC ±0.5
2 PLC ±0.4
3 PLC ±
4 PLC ±
ANGLES ±2°

MATERIAL -
FINISH -

DWN B.Lu 12DEC2022
CHK M.Chen 12DEC2022
APVD Zw.Zhou 12DEC2022
PRODUCT SPEC 108-160735
APPLICATION SPEC 114-160875
WEIGHT -

TE Connectivity

NAME 4P,COAX,HDR ASSY,90DEG AMPSEAL 16

SIZE	CAGE CODE	DRAWING NO.	RESTRICTED TO
A1	00779	C-2394674	-

CUSTOMER DRAWING | SCALE 3:1 | SHEET 1 OF 1 | REV B

4805 (3/13)