© 2023 TE Connectivity. All Rights Reserved.

REVISIONS					
P	LTR	DESCRIPTION	DATE	DWN	APVD
	A	INITIAL RELEASE	13MAY24	KJ.S	Z.Z

1 PACKAGING: Tray.

2 ALL DEMENSIONS (IN BRACKNETS) FOR INFORMATION ONLY.

3 MATERIAL/COLOR::
SEE TABLE

4 TE PART NUMBER AND DATE CODE(YY= TWO DIGIT YEAR,DDD= 3 DIGIT JULIAN DAY), MARKED IN APPROX. AREA SHOWN

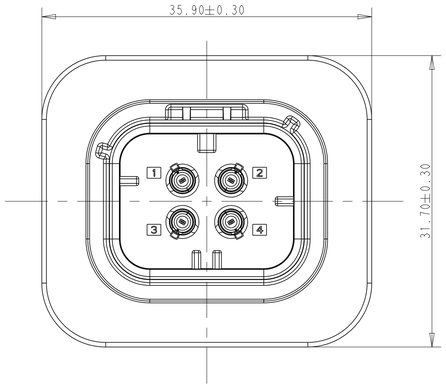

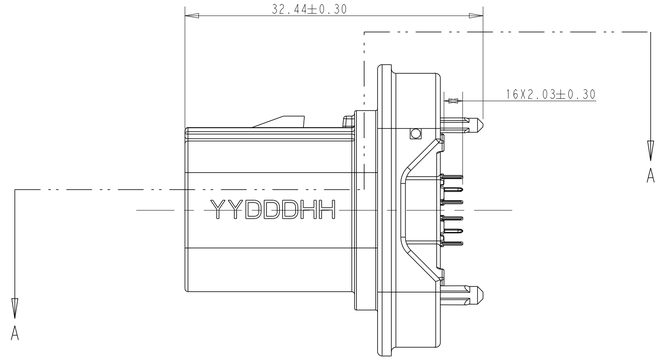

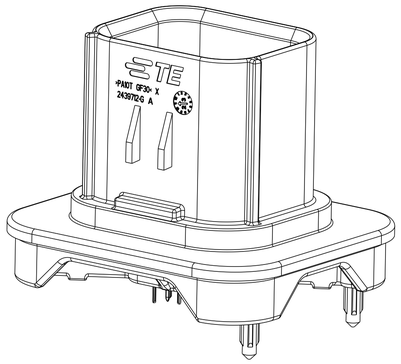

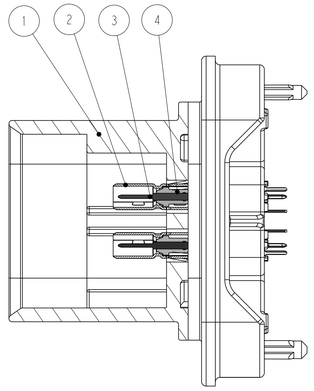

SECTION A-A

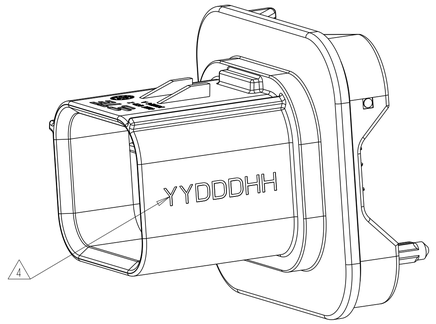

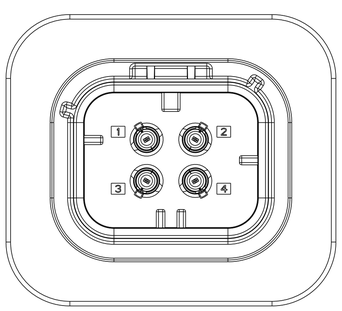

CODING A

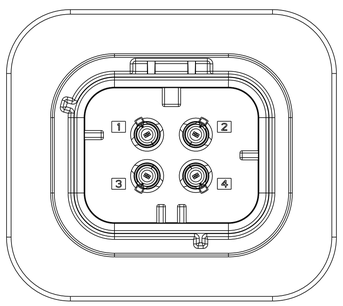

CODING B

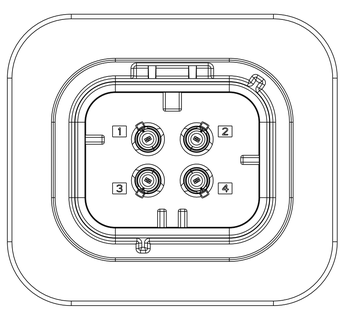

CODING C

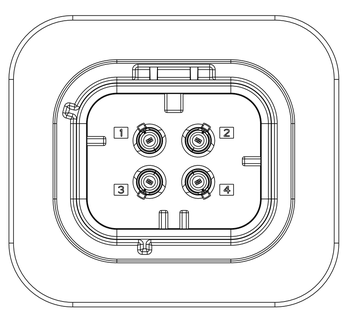

CODING D

4						OVERMOLD HOUSING	LCP	BLACK D2 (VD3005)	4
4						CENTER PIN	UNS C51100	SOLDED SIDE: 3μm MIN. Sn OVER Ni INTERFACE SIDE: 2μm MIN. Ag OVER Ni	3
4						OUTER CONTACT	JIS CuSn6	3μm MIN. Sn OVER Ni	2
				1	A	CODING HOUSING	PA10T	Black	1
			1		D			Beige	
		1			C			Signal Blue	
	1				B			Claret Violet	
1					A			WATER BLUE	
QUANTITY					CODE	DESCRIPTION	MATERIAL	FINISH & COLOR	ITEM NO.
-1	-2	-3	-4	-5					
A	B	C	D	A		ASSY CODE			
1	1	1	1	1		REVISION			

THIS DRAWING IS A CONTROLLED DOCUMENT.

DIMENSIONS: mm

TOLERANCES UNLESS OTHERWISE SPECIFIED
0 PLC ±
1 PLC ±0.1
2 PLC ±0.01
3 PLC ±0.001
4 PLC ±0.0001
ANGLES ±

MATERIAL: TBD
FINISH: -

DWN 26JUN2023 KJ.SONG
CHK 26JUN2023 M.CHEN
APVD 26JUN2023 ZW.Zhou
PRODUCT SPEC 108-161294
APPLICATION SPEC 114-160936
WEIGHT 10.015 g

TE Connectivity

NAME: 4P,COAX,HDR ASSY,180DEG AMPSEAL 16

SIZE A1 | CAGE CODE 00779 | DRAWING NO C-2439715 | RESTRICTED TO -

CUSTOMER DRAWING | SCALE 1:1 | SHEET 1 OF 2 | REV A

4805 (3/13)

© 2023 TE Connectivity. All Rights Reserved.

REVISIONS					
P	LTR	DESCRIPTION	DATE	DWN	APVD
	A	INITIAL RELEASE	13MAY24	KJ.S	Z.Z

RECOMMENDED PRINTED CIRCUIT BOARD LAYOUT
SHOWN FROM CONNECTOR SIDE

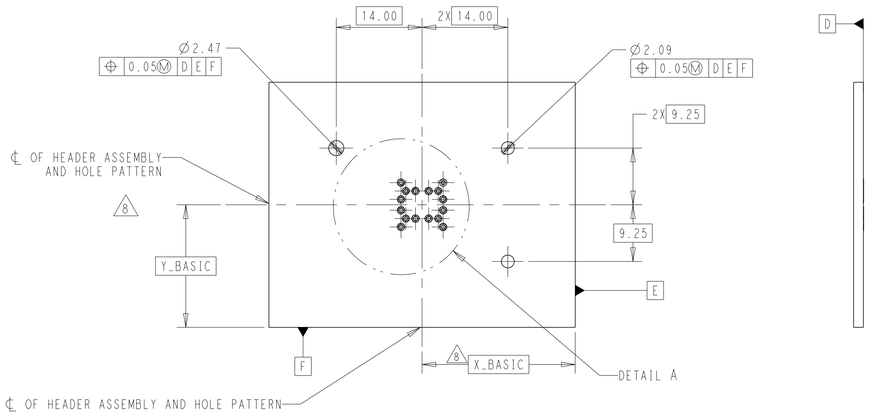

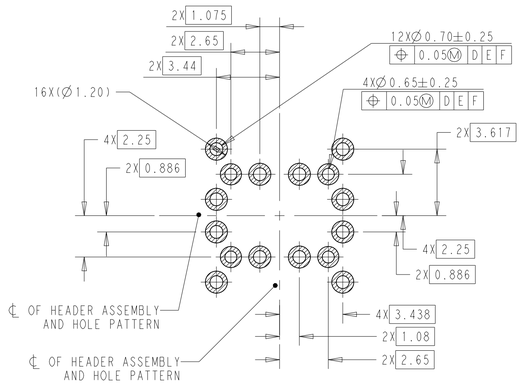

DETAIL A
SCALE 6:1

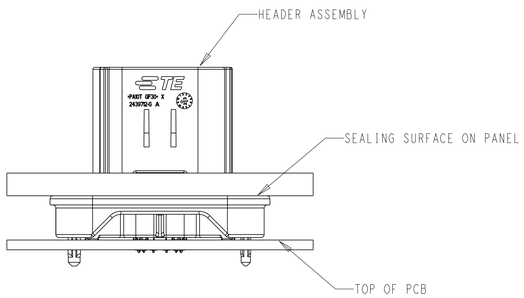

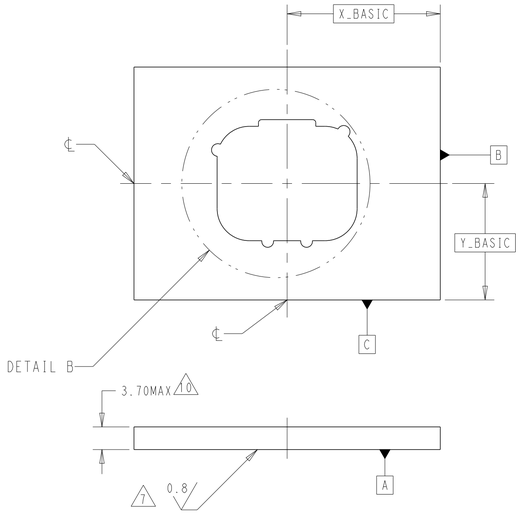

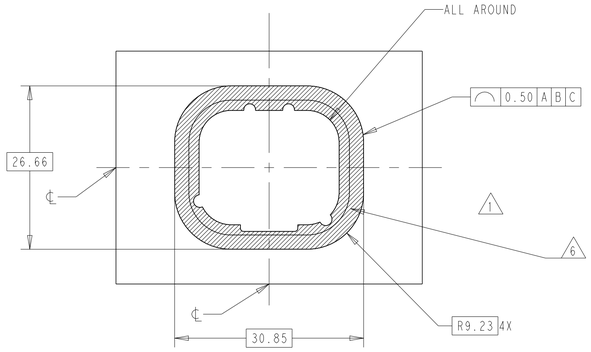

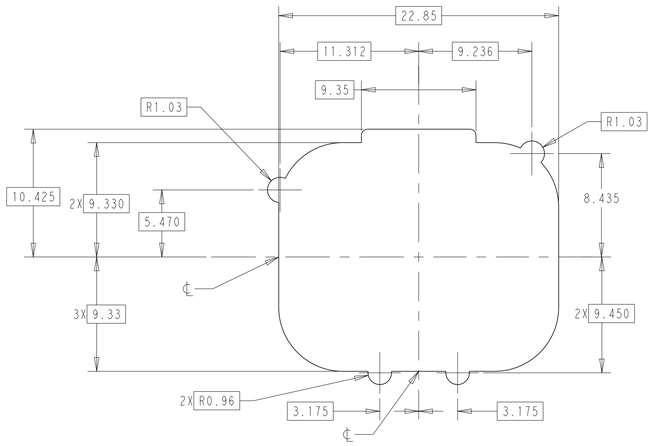

DETAIL B
SCALE 4:1

ADDITIONAL NOTES REGARDING PANEL AND PCB FITMENT:

5. FLANGE CLEARNCE REGION ON SEALED SIDE OF ENCLOSURE, NECASSARY FOR PROPER ASSEMBLY AND SEALING.
6. SEALING SURFACE WITHIN CLEARANCE REGION, NO BURRS, SCRATCHES OR TOOL MARKS ALLOWED.
7. SURFACE ROUGHNESS APPLIES WITHIN CLEARNCE REGION.
8. X_BASIC AND Y_BASIC TO BE DEFINED BY CUSTOMER.
9. REMOVE SHARP EDGES. R0.3MM MAX
10. MINIMUM PANEL THICKNESS WILL DEPEND UPON THE STRENGTH OF THE PANEL MATERIAL.

THIS DRAWING IS A CONTROLLED DOCUMENT.

DIMENSIONS: mm

TOLERANCES UNLESS OTHERWISE SPECIFIED:
0 PLC ±
1 PLC ±0.1
2 PLC ±0.05
3 PLC ±0.001
4 PLC ±0.0001
ANGLES ±

MATERIAL: TBD
FINISH: -

DWN	KJ.SONG	26JUN2023
CHK	M.CHEN	26JUN2023
APVD	ZW.ZHOU	26JUN2023
PRODUCT SPEC	108-161294	
APPLICATION SPEC	114-160936	
WEIGHT	10.015 g	

TE Connectivity

NAME: 4P,COAX,HDR ASSY,180DEG AMPSEAL 16
-

SIZE	CAGE CODE	DRAWING NO	RESTRICTED TO
A1	00779	C-2439715	-

CUSTOMER DRAWING | SCALE 1:1 | SHEET 2 OF 2 | REV A

4805 (3/13)