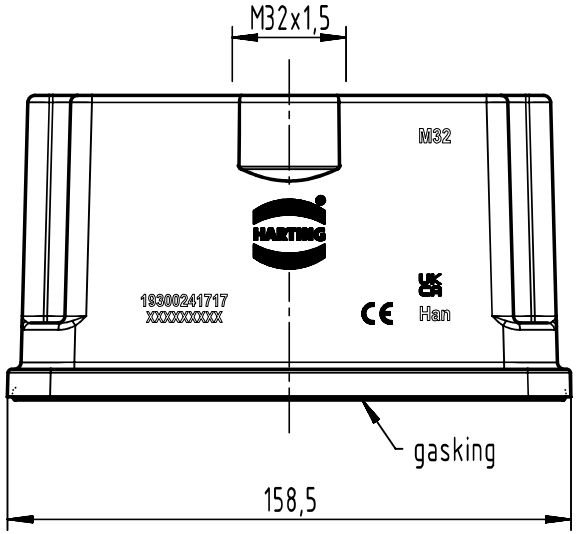

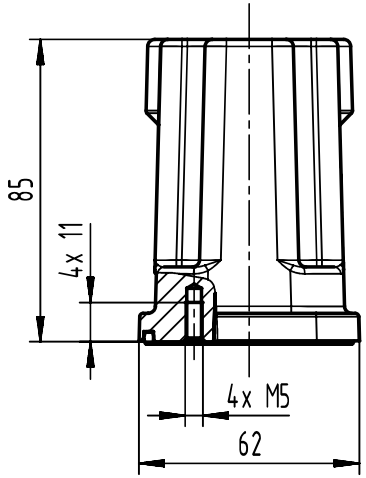

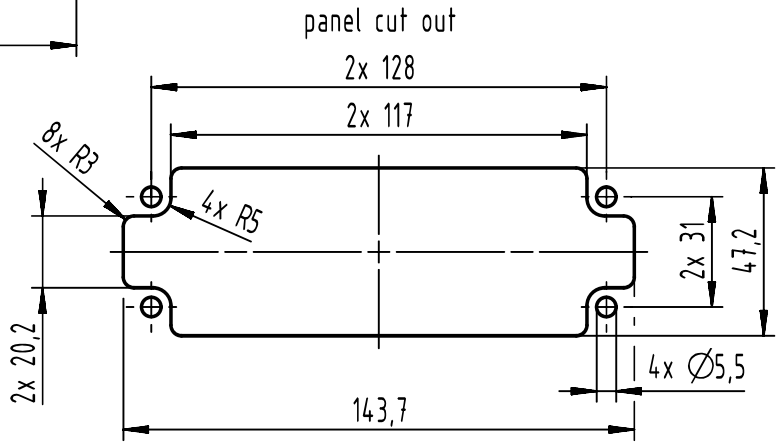

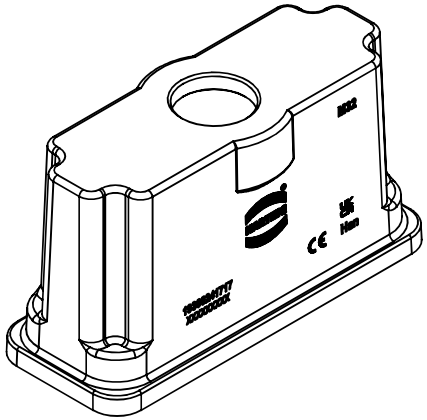

All Dimensions in mm Original Size DIN A4	Scale 1:2	Free size tol.		Ref. Sub.	
All rights reserved Department EL PD	Created by SHENGJ	Inspected by WANGSTE	Standardisation ROEBEN	Date 2023-12-11	State Final Release
HARTING D-32339 Espelkamp	Title Han 24B Docking Frame IP67 HTE M32				Doc-Key / ECM-Nr. 101104350/UGD/001/C 500000259888
	Type TB	Number 19 30 024 1717		Rev. C	Page 1/1

A4