REVISIONS					
REV	ECO	DESCRIPTION	DATE	BY	APPR
A1	--	RELEASE NEW DRAWING	17/JAN/24	LYNCH	TOMMY

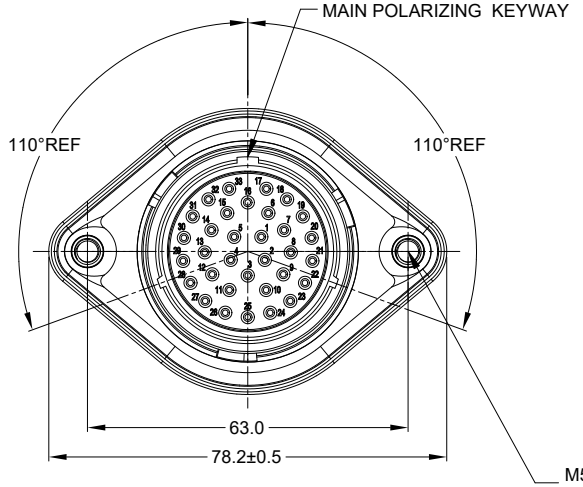

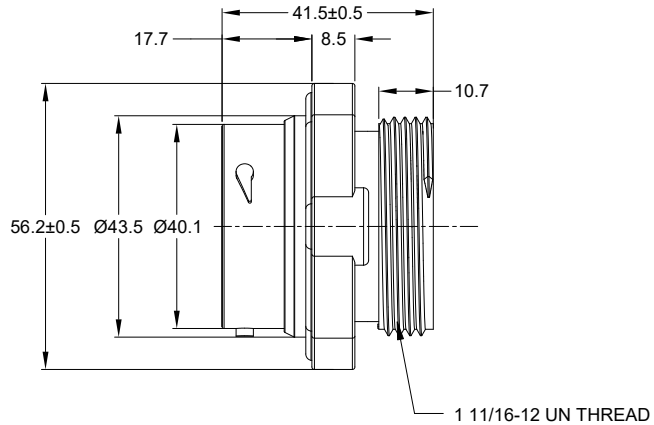

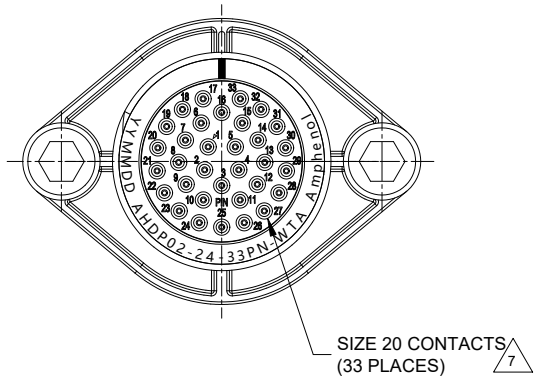

RECOMMENDED TORQUE
VALUES: 1.9-2.2 N.m

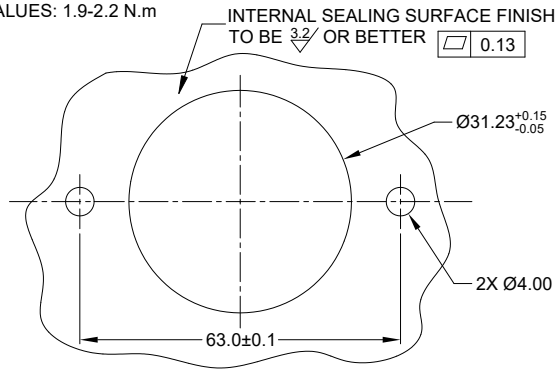

RECOMMENDED PANEL
MOUNTING HOLE

RECOMMENDED PANEL
THICKNESS:1.6 TO 4.7MM

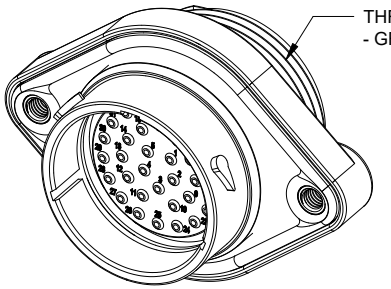

NOTES: UNLESS OTHERWISE SPECIFIED

1. MATERIAL:
   HOUSING: THERMOPLASTIC; BLACK
   SEAL: SILICONE RUBBER
   THREADED INSERT: STAINLESS STEEL

2. MODIFICATIONS: THREADED ADAPTER (WTA);
   NORMAL DIA. WIRE SEAL;
   SEALED PANEL MOUNT

3. SPECIFICATIONS:
   3.1 OPERATING TEMPERATURE: -55°C TO +125°C.
   3.2 DIELECTRIC WITHSTANDING VOLTAGE: LESS THAN 2 MILLIAMPS CURRENT LEAKAGE @ 1500 VOLTS AC.
   3.3 INSULATION RESISTANCE: 1000 MEGOHM MIN @ 25°C.
   3.4 MOISTURE RESISTANCE:
   IP68(IM OF WATER FOR A PERIOD OF 24 HOURS, MATED CONDITION);
   IP69K(MATED CONDITION)
   3.5 MATING CYCLE DURABILITY: 100 CYCLES
   3.6 RoHS COMPLIANT

4. MATING PART: AHDP06-24-33S*-XXX (* = SEAL TYPE, XXX = ALL MODIFICATIONS)

5. ALL DIMENSIONS ARE FOR REFERENCE USE ONLY.

6. RECEPTACLE IS SUPPLIED WITH DUST CAP (NOT SHOW)

7 CONTACT SIZE AND WIRE RANGE:

CONTACT SIZE	MIN. INSUL O.D.	MAX. INSUL O.D.	TYPICAL WIRE RANGE	CURRENT RATING
20	1.02 mm (.040 in)	2.41 mm (.095 in)	16-22 AWG (1.5-0.35mm²)	7.5 AMPS

QUANTITY	PART NUMBER	DESCRIPTION	ITEM
	AHDP02-24-33PN-WTA		

MATERIALS LIST

UNLESS OTHERWISE SPECIFIED
1) All dimensions are in metric(mm).
2) Tolerances are as follows:
1 PL DEC ±0.30 | Fractions ±1/64
2 PL DEC ±0.15 | Angles ±1°
3 PL DEC ±0.08
3) Note reference = 7

MATERIAL SPECIFICATIONS:
WEIGHT:61.3g

PROCESS SPECIFICATIONS:

NEXT ASS'Y:

SIGNATURES		DATE
DRAWN:	LYNCH.PAN	17/JAN/24
CHECKED:	SULLEN.ZHANG	18/JAN/24
ENGINEER:		
APPROVAL:	TOMMY.XIE	19/JAN/24
CUSTOMER:		

THIS DRAWING IS SUPPLIED FOR INFORMATION ONLY. DESIGN FEATURES, SPECIFICATIONS AND PERFORMANCE DATA SHOWN HEREON ARE THE PROPERTY OF THE AMPHENOL CORPORATION. NO RIGHTS OF REPRODUCTION ARE IMPLIED. ALL DIMENSIONS ARE SUBJECT TO NORMAL MANUFACTURING VARIATIONS.

Amphenol

Sine Systems - www.amphenol-sine.com
44724 Morley Drive
Clinton Township, MI 48036

33 POS, RECEPTACLE, PIN, PANELMATE
AHDP SIZE 24,NORMAL,WTA

SIZE	TYPE	DWG NO:	REVISION
B	C-	AHDP02-24-33PN-WTA	A1

SCALE: NONE | DURAMATE | SHEET 1 OF 1

TITLE: 33 POS, RECEPTACLE, PIN, PANELMATE AHDP SIZE 24,NORMAL,WTA
DWG NO: AHDP02-24-33PN-WTA
REV: A1
SH: 1
OF: 1