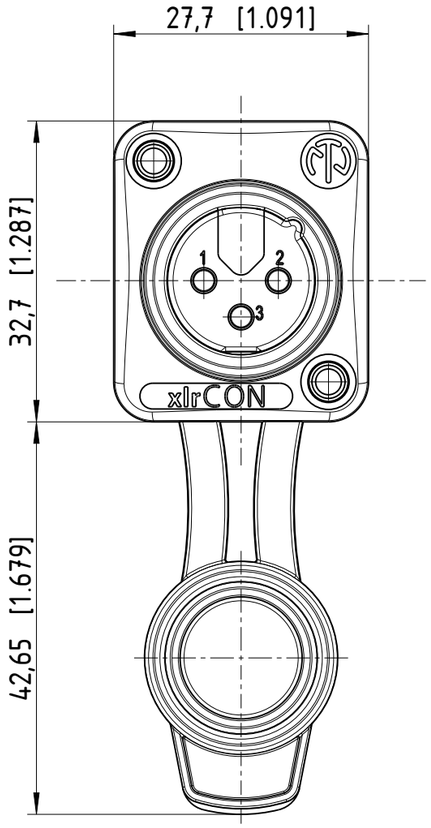

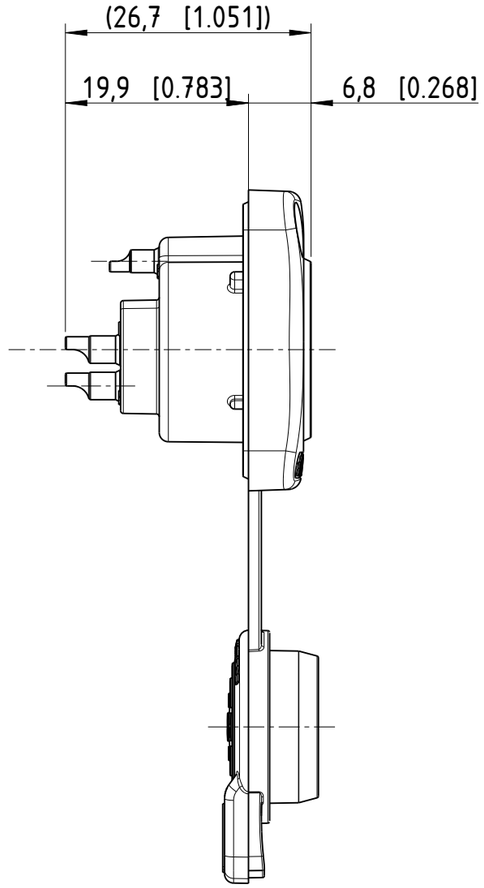

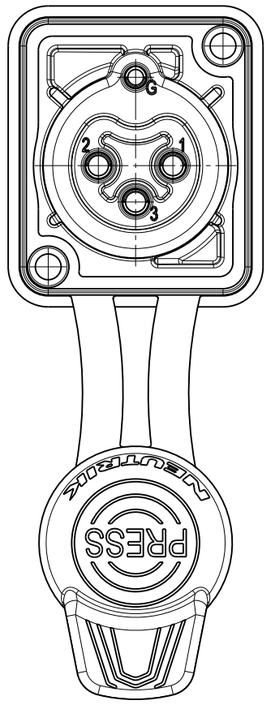

Panel cut out (rear side)

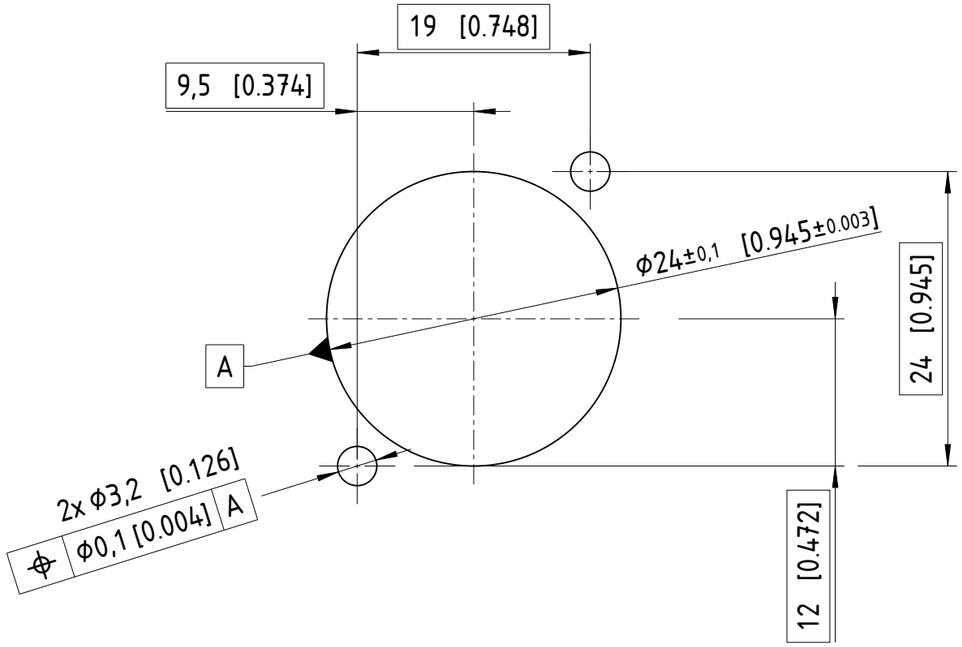

1:1

Sheet Number	Projection	Scale	Format	General Tolerancing	
1/1		1.5:1	A3	ISO 2768 mK	
Description			Created on/by	07.02.2023	Frenzel S.
NC3MDXX-TOP			Approved on/by	21.03.2024	Jutz B.
			Article ID	Model ID	Drawing ID
			NC3MDXX-TOP	30010273	20004453
Status			Revision	ECN Number	Neutrik Group
Released			A	2024-1169	

Copyright © Neutrik AG / Im alten Riet 143 / 9494 Schaan / Liechtenstein