PART NUMBER	DIMENSIONS A DIA +.000 −.010	B	C	D DIA	IDENT NUMBER	RELEASE	COMMENT
10-150913-6	.392	.719	.234	.202	62	32508-133	22553-47
-8	.516			.327	82		
-10	.642	.706		.444	102		
-12	.766	.719		.558	122		
-14	.892			.683	142		
-16	1.018			.808	162		
-18	1.142			.909	182		
-20	1.268	.781		1.034	202		
-22	1.392	.781		1.159	222		
-24	1.518	.781		1.284	242	33524-601	22698-25

10-150913

REL		WAS	DATE	D'MAN	APPD.
32508-133					
1	CNR	REM. 3 KNOBS EQUALLY SPACED ADD. IDENT NUMBER COLUMN, NOTE 4	3-1-57	A. NILES	
2	33524-571	ADD -24 & DATA	6-9-58	A. NILES	
3	33524-601	RELEASE -24	8-8-58	FCN	
4	34281-1	REM FLASH PERMISSIBLE (1 PLACE)	8-13-58	Lambrecht	
5	36878-2	ADD .125 MIN, NOTE 5.	7-1-60	RICKS	
6	38330-1	ADD. NOTE 6	6-6-61	DYKEMAN	
A1	44781-1	(MFG); ADD. NOTE 7	5-17-65	Lambrecht	
B	20079-1	(CL II) WAS .719 (-10)	1/19/88	D. McElligott	Nesbit
C	20603-1	(CL II) WAS .031±.010 (.031 +.015 -.010)	7-21-88	D. McElligott	Nesbit

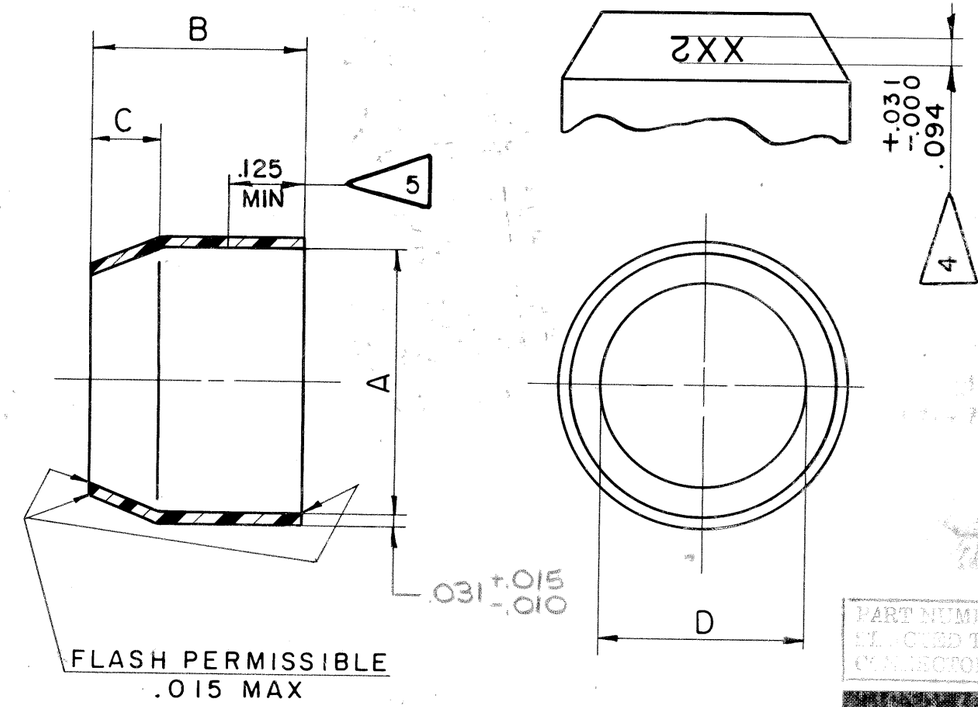

PART NUMBER USAGE REFLECTED TO ELECTRICAL CONNECTOR DESIGN GROUP

NOTES: REF SYMBOL <

7. PARTS SHALL BE CLEANED AFTER MOLDING TO REMOVE FOREIGN MATERIAL.
6. ANNEAL PARTS IMMEDIATELY AFTER MOLDING AND MOISTURE CONDITION TO APPROXIMATELY 2.5 PER CENT.
5. TOLERANCE OF A DIAMETER TO BE APPLICABLE FOR INDICATED LENGTH.
4. IDENTIFICATION NUMBER TO BE LOCATED IN RELATIVE POSITION SHOWN ON INSIDE OF END BELL. NUMBERS TO BE RAISED .006-.010.
3. PARTS TO BE TRANSPARENT TO TRANSLUCENT.
2. E. I. DUPONT DE NEMOURS & CO, INC ZYTEL 101.
1. ENGINEERING SOURCE APPROVAL REQUIRED.

MATERIAL SPEC.	PROCESS SPEC.
NYLON SEE NOTES 1 & 2	
HEAT TREAT SPEC.	FINISH SPEC.
TOOL ACC.	COM. R ABOVE

SCINTILLA MAGNETO DIVISION
BENDIX AVIATION CORPORATION
SIDNEY, N. Y., U.S.A.

NAME: END BELL, POTTING, ELECTRICAL CONNECTOR, TYPE BT( )

D'MAN	CHECKER	MAT.	ST'DS	CH. D'MAN	APPROVED	SCALE
VIMISLIK	Dudak	CP	Whist	Ovrgard	Wernmann	NONE
1-29-57	3-5-57	3-4-57	3-6-57	3-8-57	3-8-57	

TOLERANCES UNLESS OTHERWISE SPECIFIED
FRACTIONS ± 1/32 DECIMALS ± .010 ANGLES ± 2°
CONCENTRICITY .015 FIR. BREAK SHARP EDGES .010-.030
SQUARENESS .010 PER INCH OF LENGTH
MACHINED SURFACES MUST BE FLAT AND PARALLEL WITHIN THE TOLERANCE OF THE APPLICABLE DIMENSION AND SMOOTH WITHIN 200 MICRO-INCHES RMS.

NEXT ASSEMBLY: 72-105606 THRU 72-105650; 72-127006 THRU 72-127050 — WEIGHT — LBS.

SUPERSEDES AND IS NOT INTERCHANGEABLE

SUPERSEDED BY REF. 10-117913

10-150913

DWG SIZE B CODE 77820 TAB