Feb.1.2025 Copyright 2025 HIROSE ELECTRIC CO., LTD. All Rights Reserved.
In case of consideration for using Automotive equipment / device which demand high reliability, kindly contact our sales window correspondents.

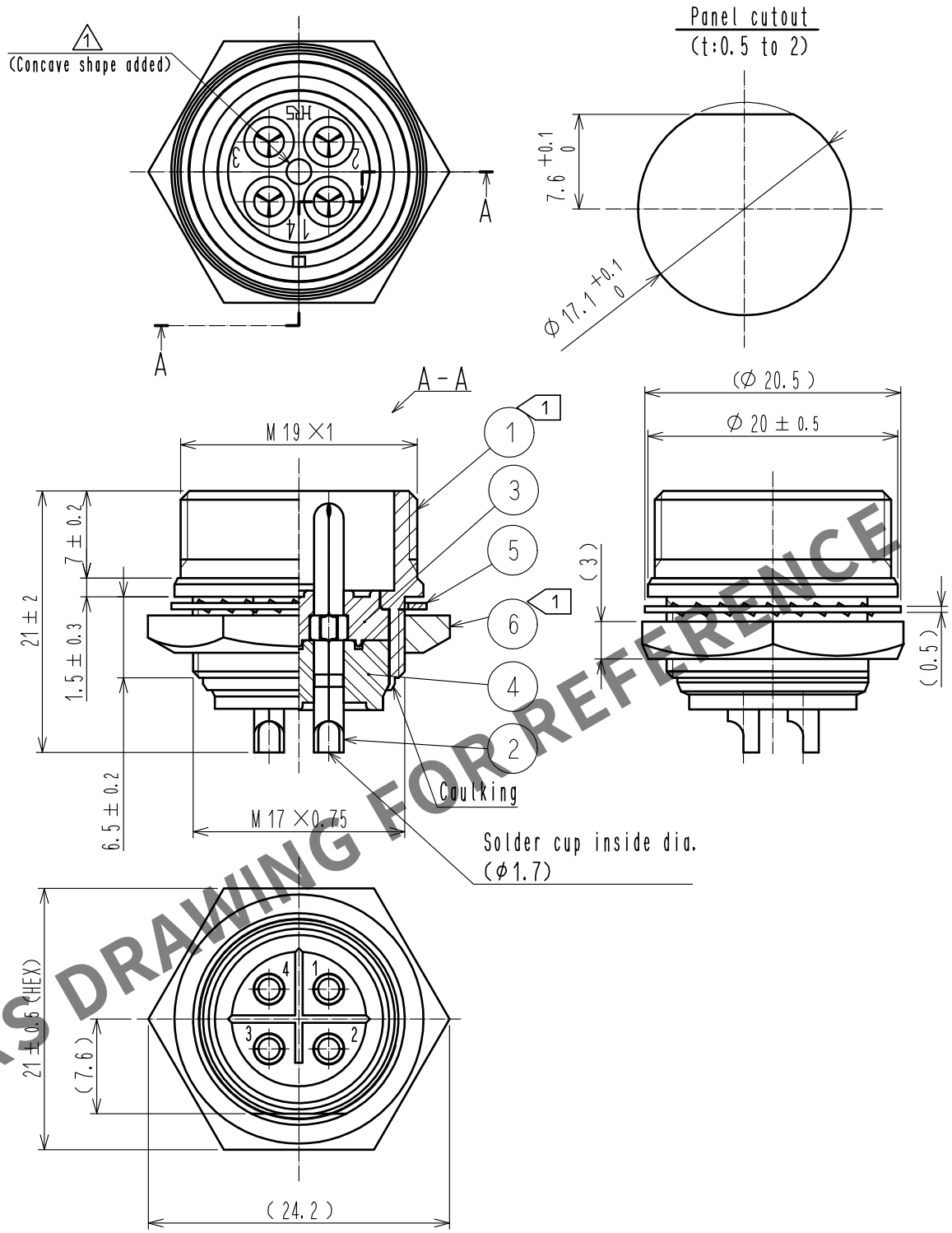

HRS DRAWING FOR REFERENCE

Note 1 The tighteninig torque of Ref. No.⑥: 3 to 4 N・m.
Apply Loctite 243 HENKEL JAPAN or equivalent to the threaded portion (M17×0.75) of Ref. No.①
in order to prevent loosening.

NO.	MATERIAL	FINISH . REMARKS	NO.	MATERIAL	FINISH . REMARKS
3	Polyphenylene sulfide	(Black)	6	Brass	Nickel plating
2	Brass	Silver plating 2μm min.	5	Phosphor bronze	Nickel plating
1	Brass	Nickel plating	4	Polyphenylene sulfide	(Black)

UNITS	SCALE		COUNT	DESCRIPTION OF REVISIONS	DESIGNED	CHECKED	DATE
mm	2 : 1	1	1	DIS-C-00016536	TY. SUZUKI	HY. KOBAYASHI	20231208

HIROSE ELECTRIC CO., LTD.

APPROVED	TP. KOMATSU	20230613
CHECKED	HY. KOBAYASHI	20230613
DESIGNED	HT. ZENBA	20230613
DRAWN	KR. SUZUKI	20230613

DRAWING NO.	EDC-040357-81-00
PART NO.	RM15TRH-4PA(81)
CODE NO.	CL0109-0887-0-81

1 / 1

FORM HC0011-5-51