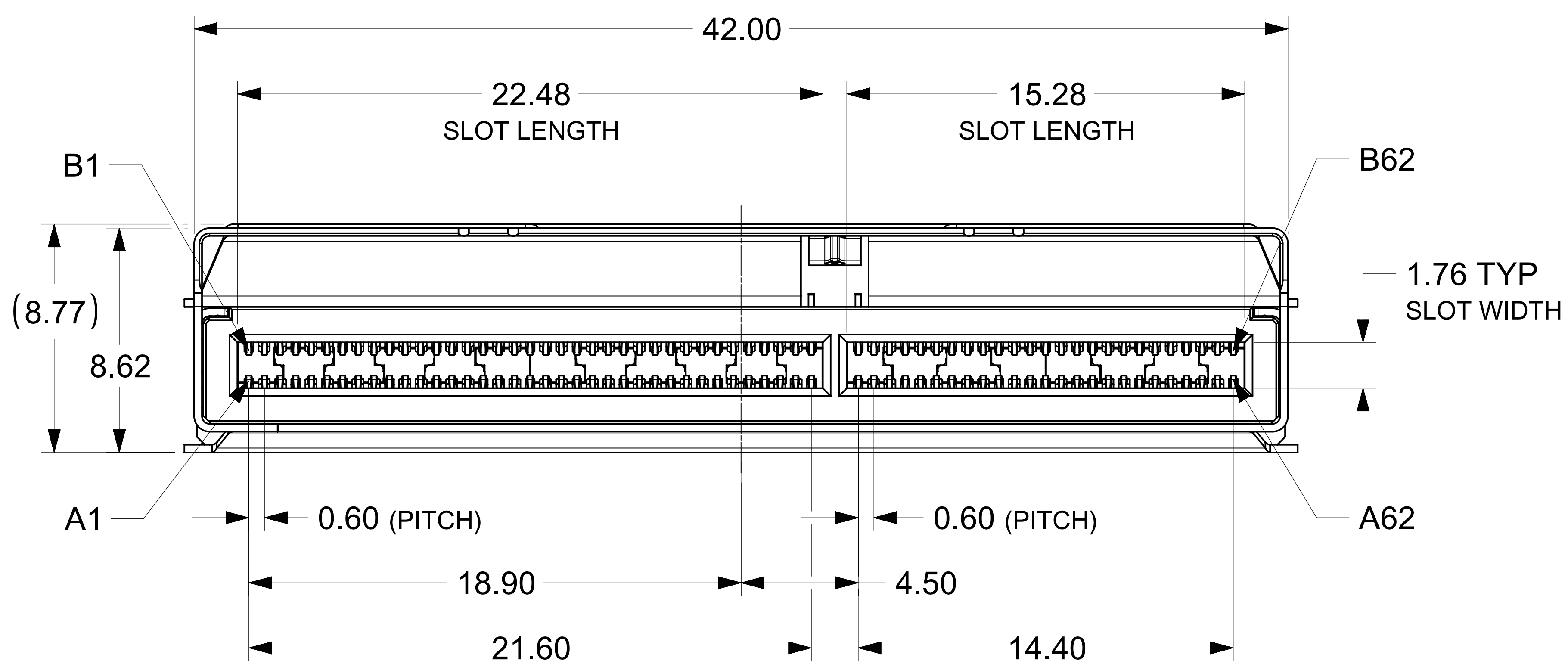

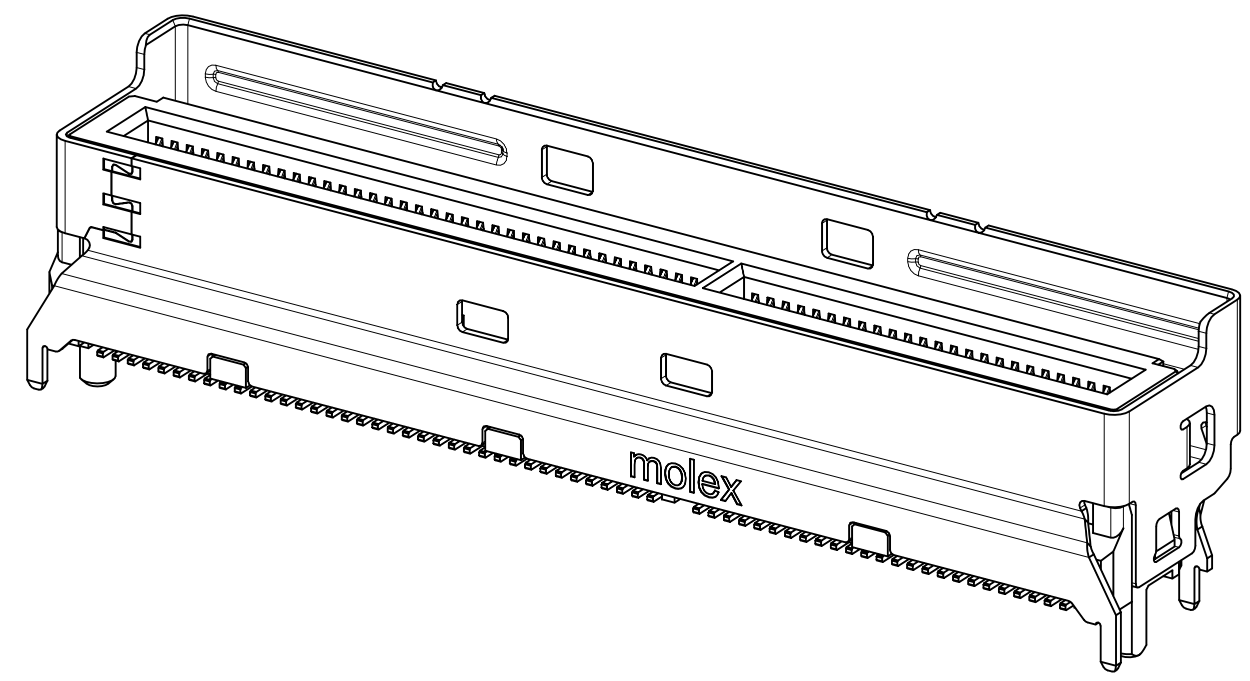

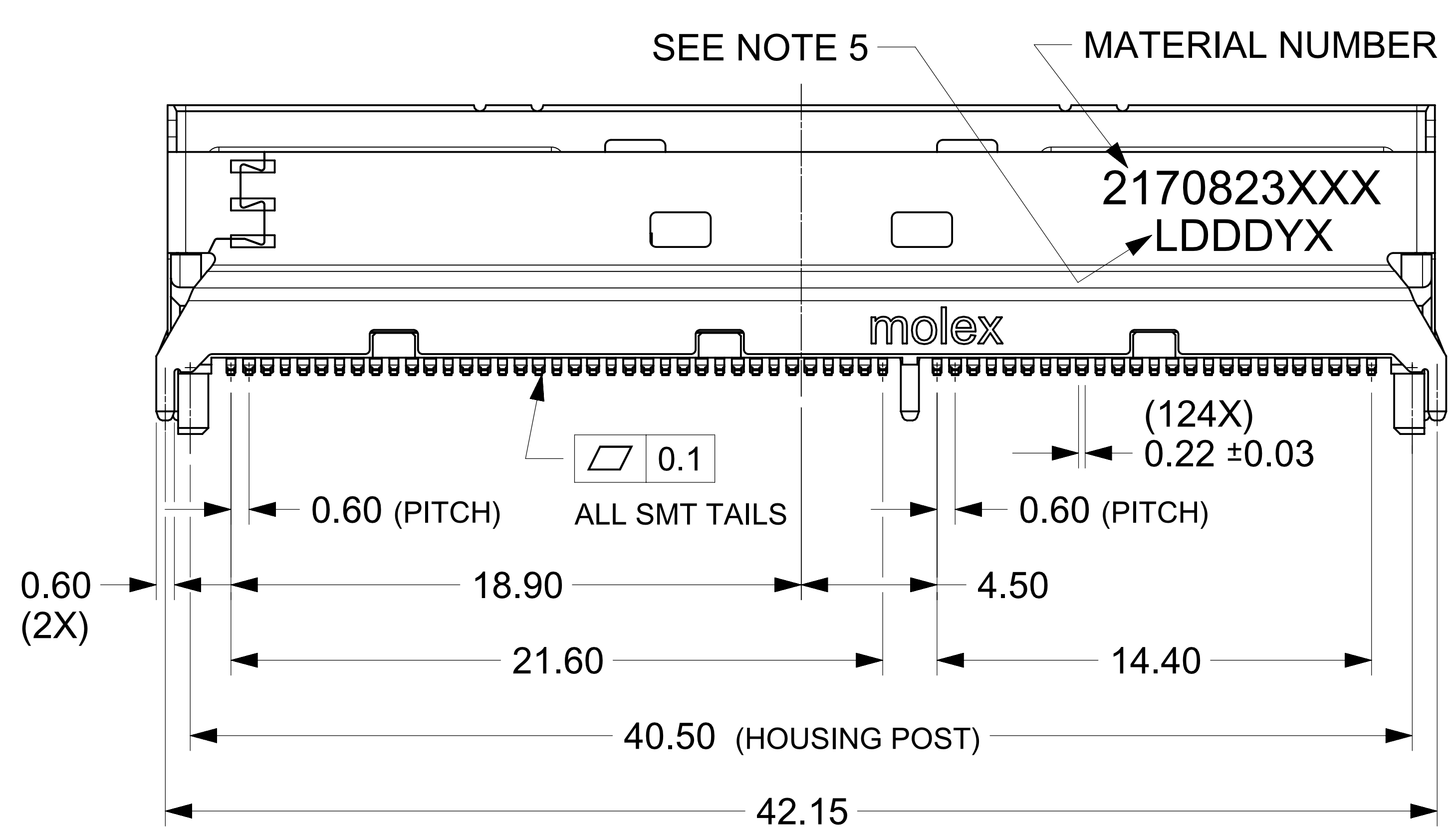

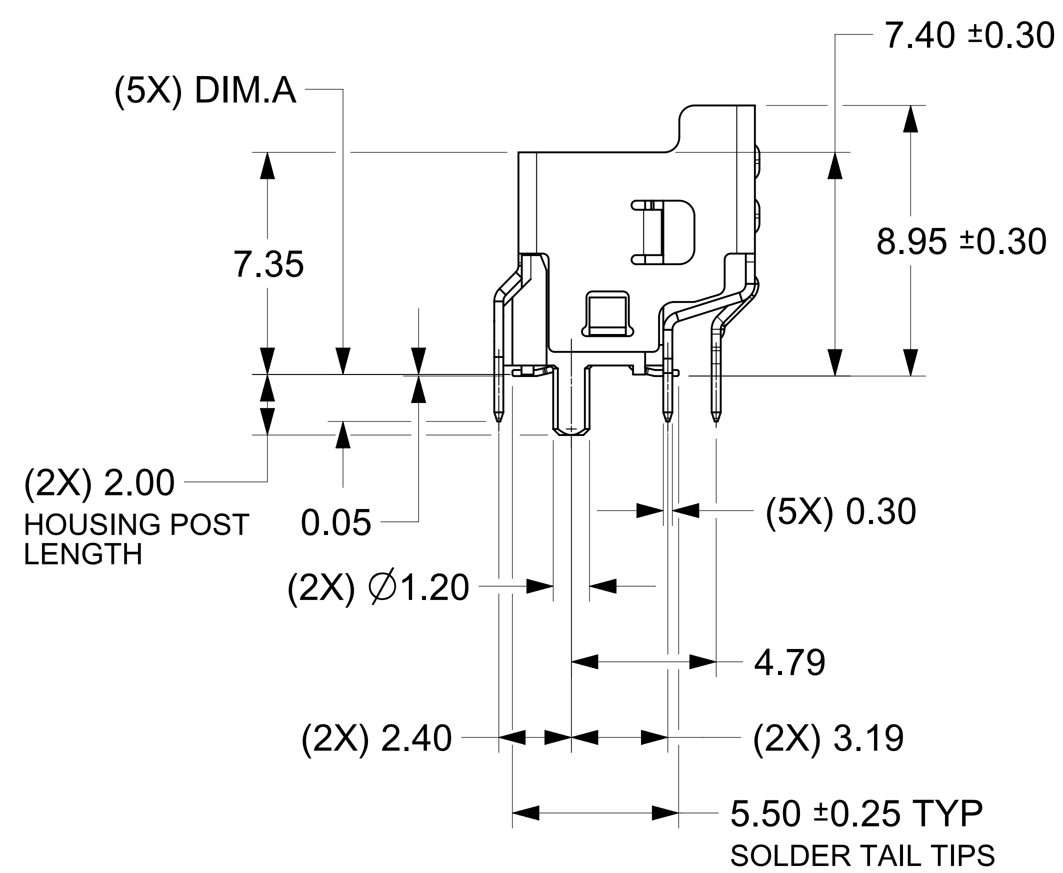

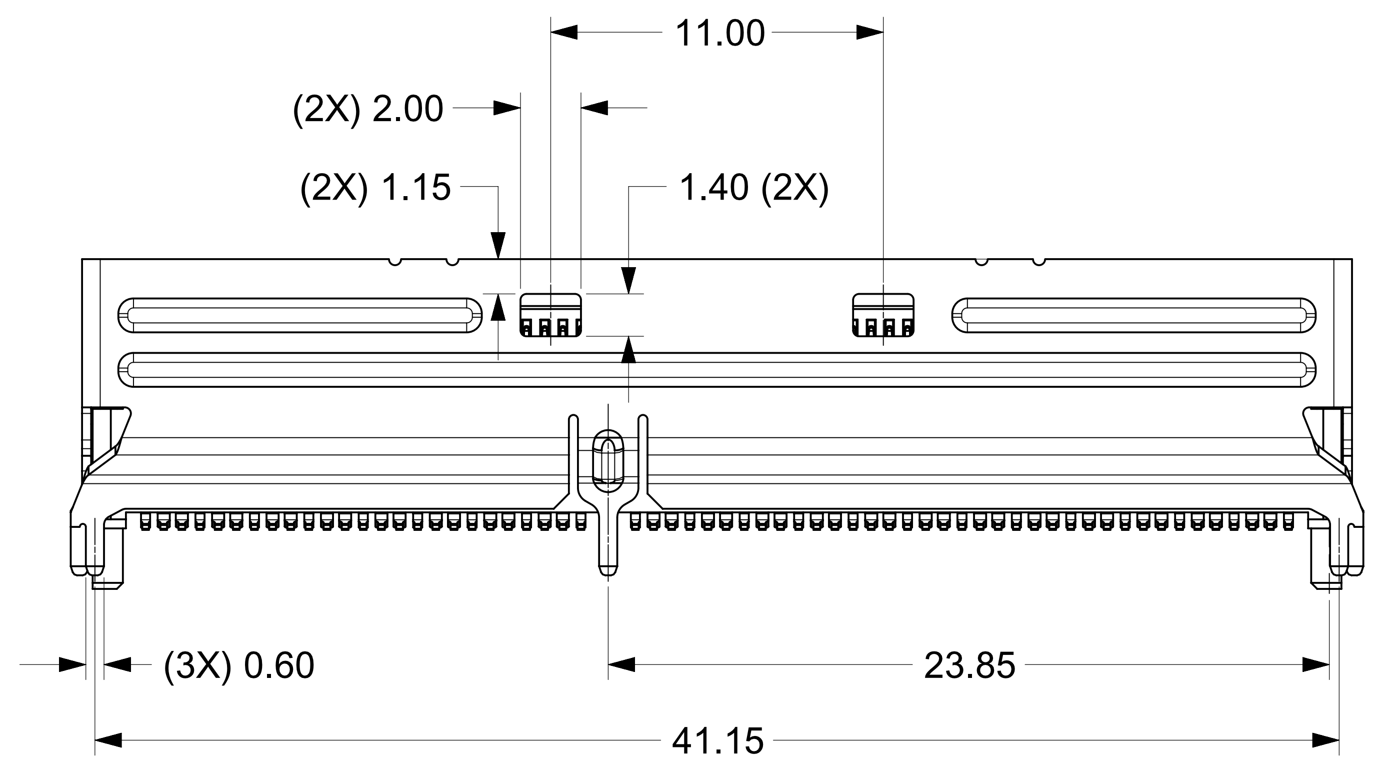

NOTES:
1. MATERIALS:
   PLASTICS : HIGH TEMPERATURE THERMOPLASTIC UL94-0,COLOR: BLACK
   SHELL : STAINLESS STEEL
   CONTACT: COPPER ALLOY
2. FINISH
   TERMINAL :
   CONTACT AREA : SELECTED GOLD PLATING, REFER TO TABLE ON SHEET 2
   SOLDER AREA : MATTE TIN PLATING 100u" MIN.
   UNDER PLATING: NICKEL PLATING 50u" MIN. OVER ALL
   SHELL :
   SOLDERABLE NICKEL PLATING OVER ALL, REFER TO TABLE ON SHEET 2
3. CONNECTOR SHALL BE PACKED IN TAPE AND REEL AS PER PACKAGE SPECIFICATION REFER TO TABLE
4. CONNECTOR INTENDED TO MATE WITH PLUG CABLE SERIES 215071, 215073 AND 215732
5. DATE CODE LOCATION SHOWN, DATE CODE FORMATE: LDDDYX
   L: MOLEX INTERNAL CONTROL
   DDD: DAY OF THE YEAR
   Y: LAST DIGIT OF THE YEAR
   X: MOLEX INTERNAL CONTROL
6. RoHS COMPLIANT

THIS DRAWING CONTAINS INFORMATION THAT IS PROPRIETARY TO MOLEX ELECTRONIC TECHNOLOGIES, LLC AND SHOULD NOT BE USED WITHOUT WRITTEN PERMISSION

FUNCTIONAL SYMBOLS: FA = 0, FC = 0, FP = 0
DIVISIONAL SYMBOLS

DIMENSION UNITS	MM
SCALE	5:1
GENERAL TOLERANCES (UNLESS SPECIFIED)	
ANGULAR TOL	± 2°
4 PLACES	±
3 PLACES	± 0.1000
2 PLACES	± 0.200
1 PLACE	± 0.30
0 PLACES	±
DRAFT WHERE APPLICABLE MUST REMAIN WITHIN DIMENSIONS	

CURRENT REV DESC: SEE REVISION HISTORY

molex

MCIO REC. VERTICAL 16X GEN5

PRODUCT CUSTOMER DRAWING

STATUS:	Production	
DRWN:	Sky Lee	2024-03-04
CHK'D:	Sky Lee	2024-09-02
APPR:	Serway Yang	2024-09-02

DOCUMENT NUMBER	DOC TYPE	DOC PART	REVISION
2170823011	PSD	001	E1

THIRD ANGLE PROJECTION	DRAWING	SERIES	MATERIAL NUMBER	CUSTOMER	SHEET NUMBER
	C-SIZE		SEE TABLE		1 OF 6

MATERIAL NUMBER	PIN COUNT	CONTACT AREA GOLD PLATING	SOLDER PEG LENGTH DIM.A	SHELL FINISH	CAP	PACKAGE SPECIFICATION
2170823011	124	0.375µm [15u"] MIN.	1.50	SOLDERABLE NICKEL PLATING 1.27µm (50u") MINIMUM OVER ALL	WITH CAP	2172373011_PK
2170823012			2.20			
2170823013			3.00			
2170823014			4.20			
2170823015			1.20 (SHELL PEGS AND HOUSING POSTS)			
2170823016			1.85			
2170823021		0.75µm [30u"] MIN.	1.50			
2170823022			2.20			
2170823023			3.00			
2170823024			4.20			
2170823025			1.20 (SHELL PEGS AND HOUSING POSTS)			
2170823026			1.85			
2170823051		0.375µm [15u"] MIN.	1.50		WITHOUT CAP	2172373051_PK
2170823052			2.20			
2170823053			3.00			
2170823054			4.20			
2170823055			1.20 (SHELL PEGS AND HOUSING POSTS)			
2170823056			1.85			
2170823061		0.75µm [30u"] MIN.	1.50			
2170823062			2.20			
2170823063			3.00			
2170823064			4.20			
2170823065			1.20 (SHELL PEGS AND HOUSING POSTS)			
2170823066			1.85			

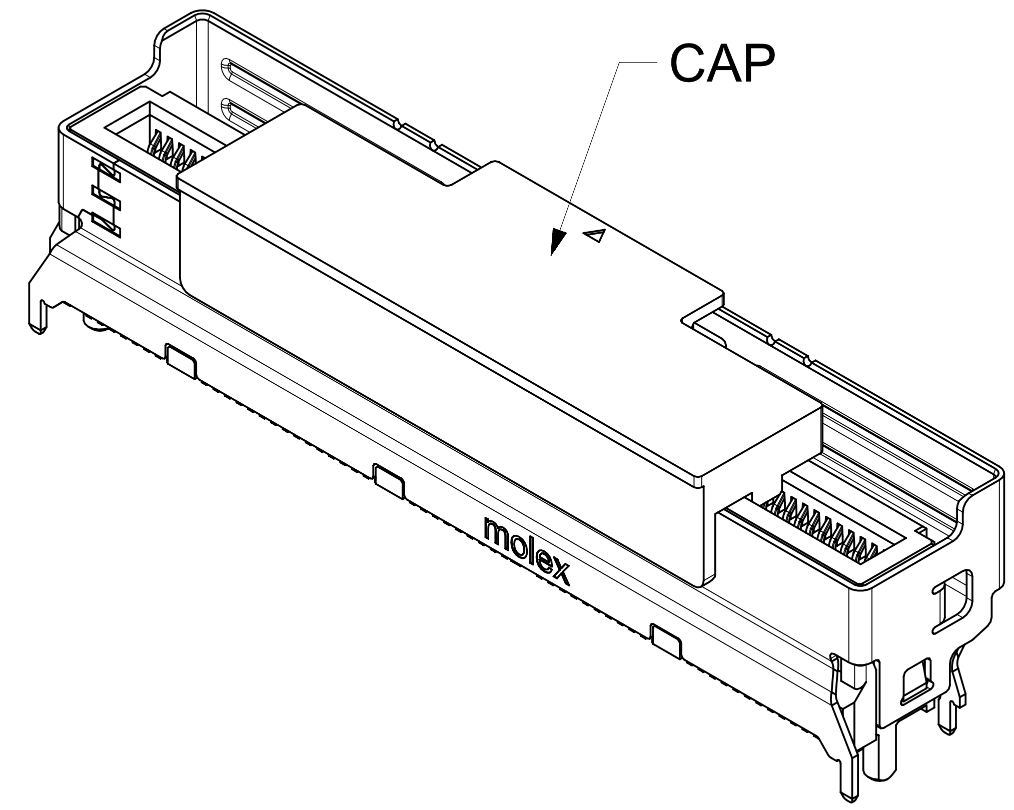

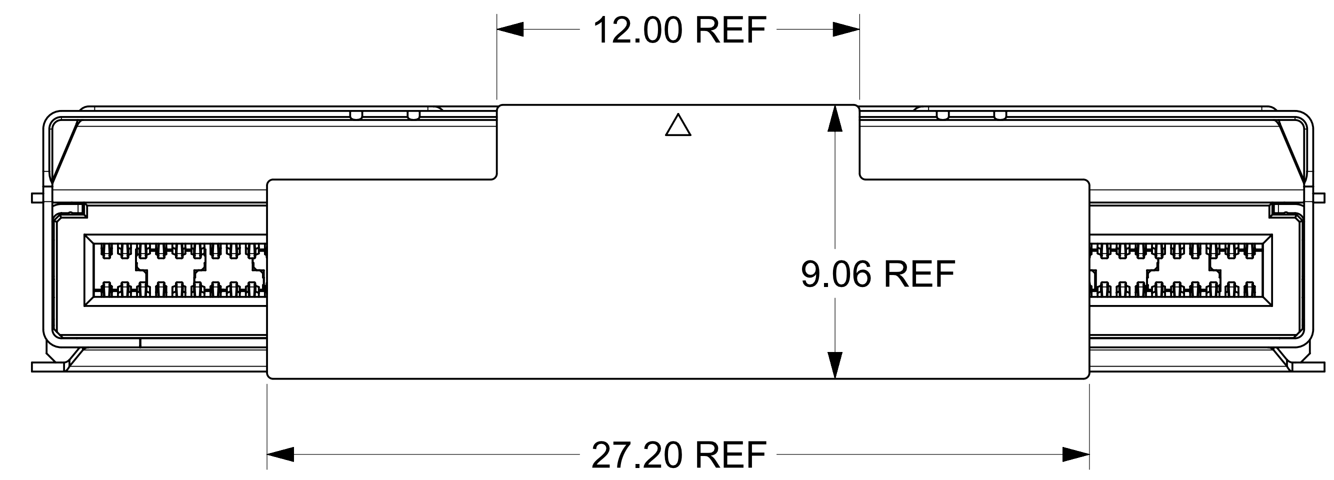

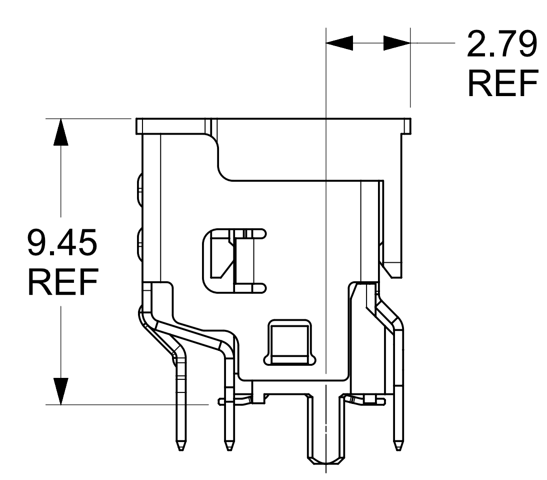

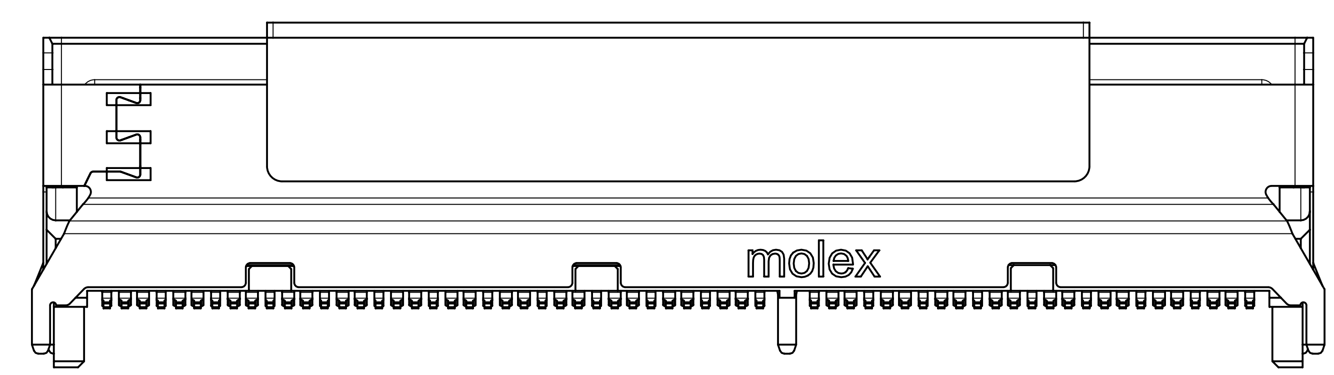

2170823XXX WITH CAP

THIS DRAWING CONTAINS INFORMATION THAT IS PROPRIETARY TO MOLEX ELECTRONIC TECHNOLOGIES, LLC AND SHOULD NOT BE USED WITHOUT WRITTEN PERMISSION

FUNCTIONAL SYMBOLS: FA = 0, FC = 0, FP = 0

DIVISIONAL SYMBOLS

DIMENSION UNITS	SCALE
MM	5:1
GENERAL TOLERANCES (UNLESS SPECIFIED)	
ANGULAR TOL	± 2°
4 PLACES	±
3 PLACES	± 0.1000
2 PLACES	± 0.200
1 PLACE	± 0.30
0 PLACES	±

DRAFT WHERE APPLICABLE MUST REMAIN WITHIN DIMENSIONS

CURRENT REV DESC: SEE REVISION HISTORY

STATUS: Production
DRWN: Sky Lee 2024-03-04
CHK'D: Sky Lee 2024-09-02
APPR: Serway Yang 2024-09-02

THIRD ANGLE PROJECTION | DRAWING: C-SIZE | SERIES

molex

MCIO REC. VERTICAL 16X GEN5

PRODUCT CUSTOMER DRAWING

DOCUMENT NUMBER	DOC TYPE	DOC PART	REVISION
2170823011	PSD	001	E1

MATERIAL NUMBER	CUSTOMER	SHEET NUMBER
SEE TABLE		2 OF 6

MATERIAL NUMBER	PIN COUNT	CONTACT AREA GOLD PLATING	SOLDER PEG LENGTH DIM.A	SHELL FINISH	CAP	PACKAGE SPECIFICATION	PLACE OF PRODUCTION
2170823111	124	0.375µm [15u"] MIN.	1.50	SOLDERABLE NICKEL PLATING 1.27µm (50u") MINIMUM OVER ALL	WITH CAP	2172373011_PK	OUTSIDE OF CHINA
2170823112			2.20				
2170823113			3.00				
2170823114			4.20				
2170823115			1.20 (SHELL PEGS AND HOUSING POSTS)				
2170823116			1.85				
2170823121		0.75µm [30u"] MIN.	1.50				
2170823122			2.20				
2170823123			3.00				
2170823124			4.20				
2170823125			1.20 (SHELL PEGS AND HOUSING POSTS)				
2170823126			1.85				
2170823451		0.375µm [15u"] MIN.	1.50		WITHOUT CAP	2172373051_PK	
2170823452			2.20				
2170823453			3.00				
2170823454			4.20				
2170823455			1.20 (SHELL PEGS AND HOUSING POSTS)				
2170823456			1.85				
2170823461		0.75µm [30u"] MIN.	1.50				
2170823462			2.20				
2170823463			3.00				
2170823464			4.20				
2170823465			1.20 (SHELL PEGS AND HOUSING POSTS)				
2170823466			1.85				

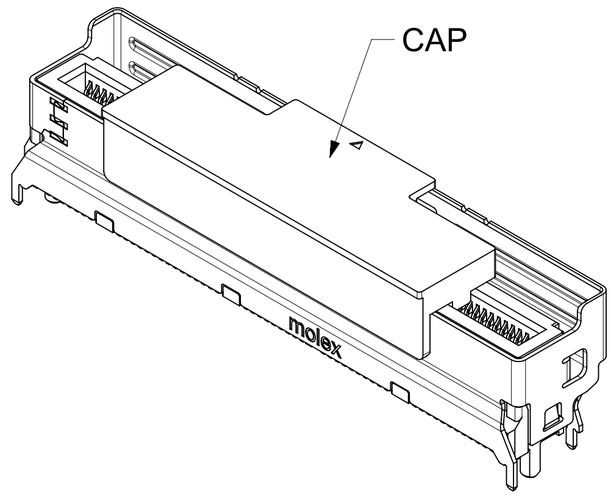

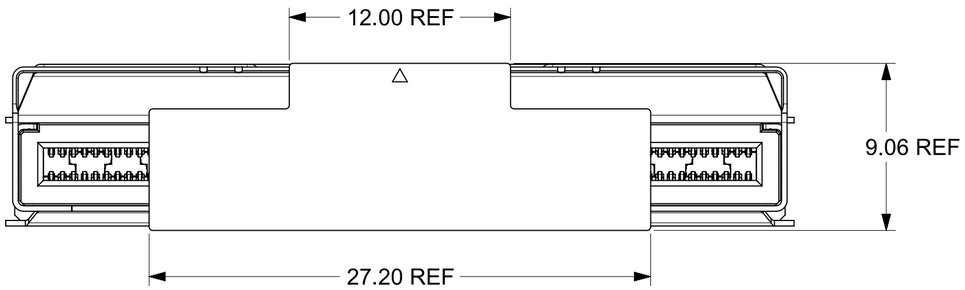

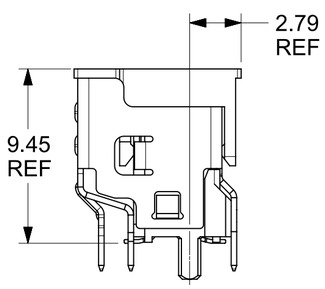

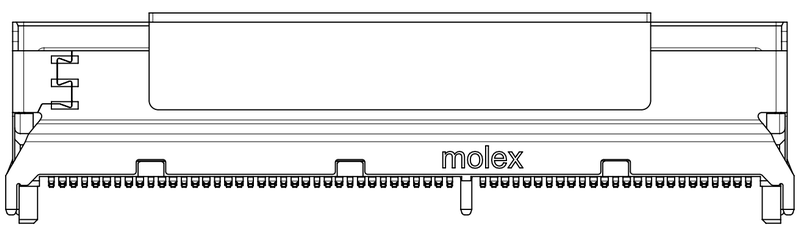

2170823XXX WITH CAP

THIS DRAWING CONTAINS INFORMATION THAT IS PROPRIETARY TO MOLEX ELECTRONIC TECHNOLOGIES, LLC AND SHOULD NOT BE USED WITHOUT WRITTEN PERMISSION

FUNCTIONAL SYMBOLS	DIMENSION UNITS	SCALE	CURRENT REV DESC: SEE REVISION HISTORY
FA = 0	MM	5:1	
FC = 0	GENERAL TOLERANCES (UNLESS SPECIFIED)		
FP = 0	ANGULAR TOL	± 2°	
DIVISIONAL SYMBOLS	4 PLACES	±	
	3 PLACES	± 0.1000	
	2 PLACES	± 0.200	
	1 PLACE	± 0.30	
	0 PLACES	±	

STATUS: Production
DRWN: Sky Lee 2024-03-04
CHK'D: Sky Lee 2024-09-02
APPR: Serway Yang 2024-09-02

DRAFT WHERE APPLICABLE MUST REMAIN WITHIN DIMENSIONS

THIRD ANGLE PROJECTION | DRAWING: C-SIZE | SERIES

molex

MCIO REC. VERTICAL 16X GEN5

PRODUCT CUSTOMER DRAWING

DOCUMENT NUMBER	DOC TYPE	DOC PART	REVISION
2170823011	PSD	001	E1

MATERIAL NUMBER	CUSTOMER	SHEET NUMBER
SEE TABLE		3 OF 6

FORMAT TC-dpros-C
REVISION: B
DATE: 2022/08/01

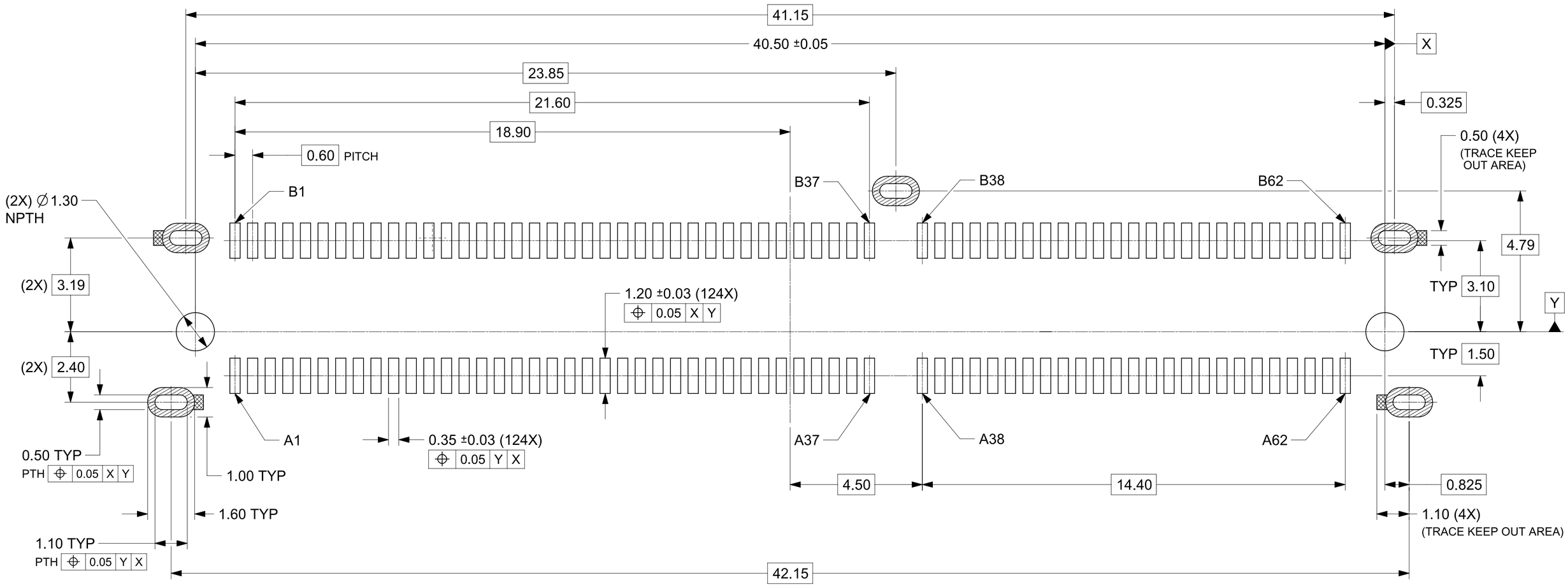

RECOMMENDED PCB LAYOUT
(GENERAL TOLERANCES: ±0.05)

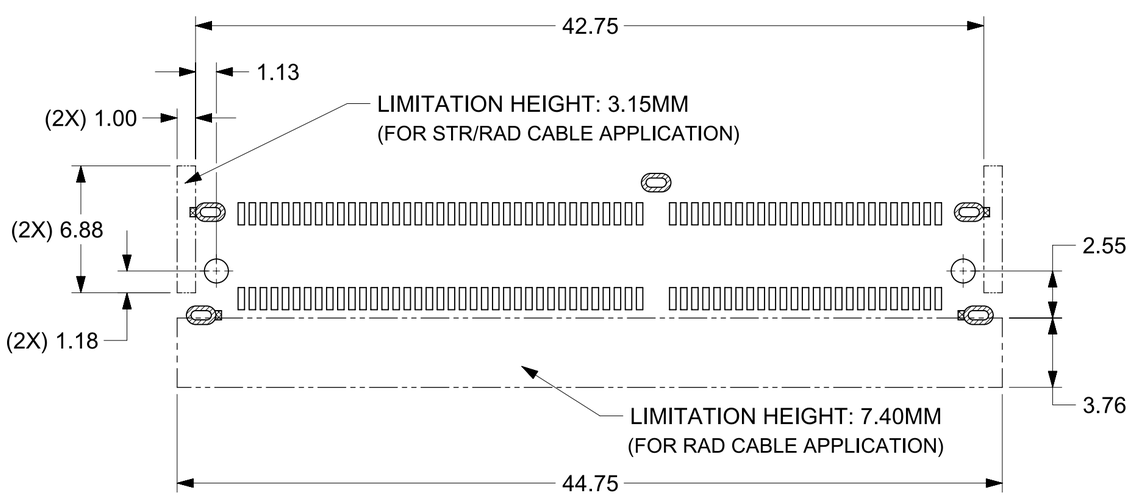

COMPONENTS KEEP OUT AREA

SCALE 4:1

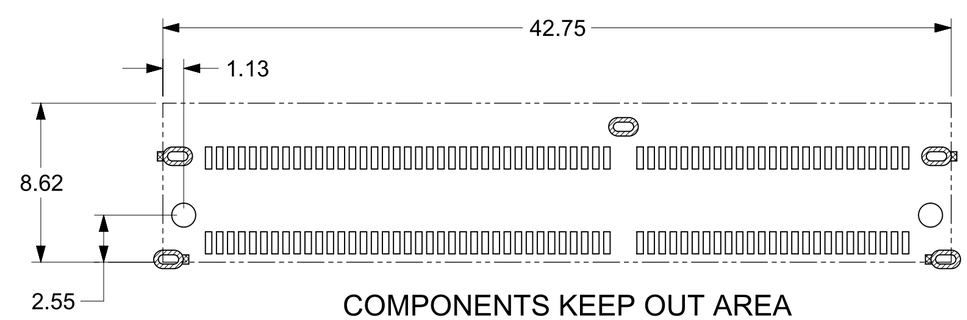

COMPONENTS KEEP OUT AREA
LIMITATION HEIGHT: 0MM

SCALE 4:1

FUNCTIONAL SYMBOLS	THIS DRAWING CONTAINS INFORMATION THAT IS PROPRIETARY TO MOLEX ELECTRONIC TECHNOLOGIES, LLC AND SHOULD NOT BE USED WITHOUT WRITTEN PERMISSION			
FA = 0	DIMENSION UNITS: MM	SCALE: 10:1	CURRENT REV DESC: SEE REVISION HISTORY	molex
FC = 0	GENERAL TOLERANCES (UNLESS SPECIFIED)			MCIO REC. VERTICAL 16X GEN5
FP = 0	ANGULAR TOL ± 2°			
	4 PLACES ±			PRODUCT CUSTOMER DRAWING
DIVISIONAL SYMBOLS	3 PLACES ± 0.1000		STATUS: Production	DOCUMENT NUMBER: 2170823011 / DOC TYPE: PSD / DOC PART: 001 / REVISION: E1
	2 PLACES ± 0.200		DRWN: Sky Lee 2024-03-04	
	1 PLACE ± 0.30		CHK'D: Sky Lee 2024-09-02	
	0 PLACES ±		APPR: Serway Yang 2024-09-02	
	DRAFT WHERE APPLICABLE MUST REMAIN WITHIN DIMENSIONS	THIRD ANGLE PROJECTION	DRAWING: C-SIZE / SERIES	MATERIAL NUMBER: SEE TABLE / CUSTOMER / SHEET NUMBER: 4 OF 6

FORMAT TC-dpros-C
REVISION: B
DATE: 2022/08/01

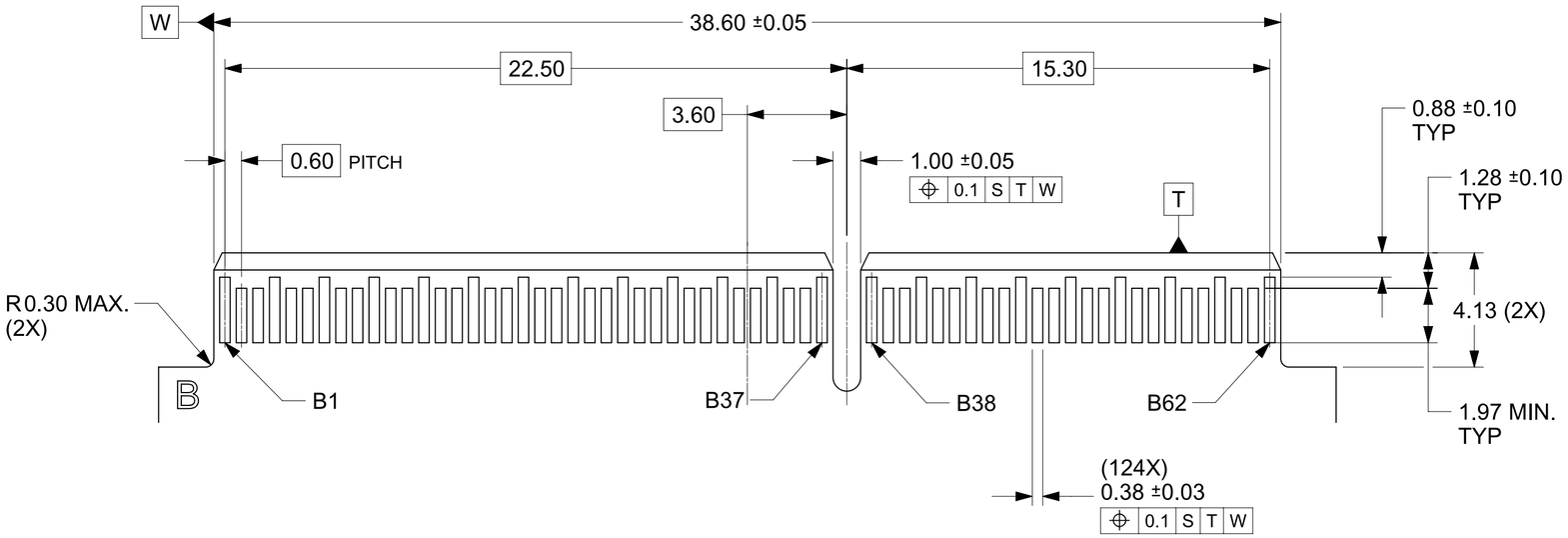

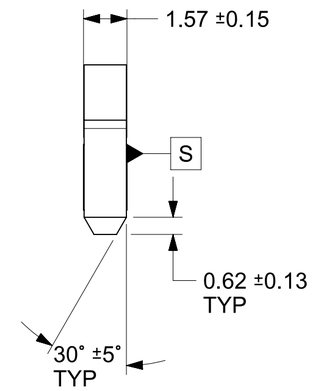

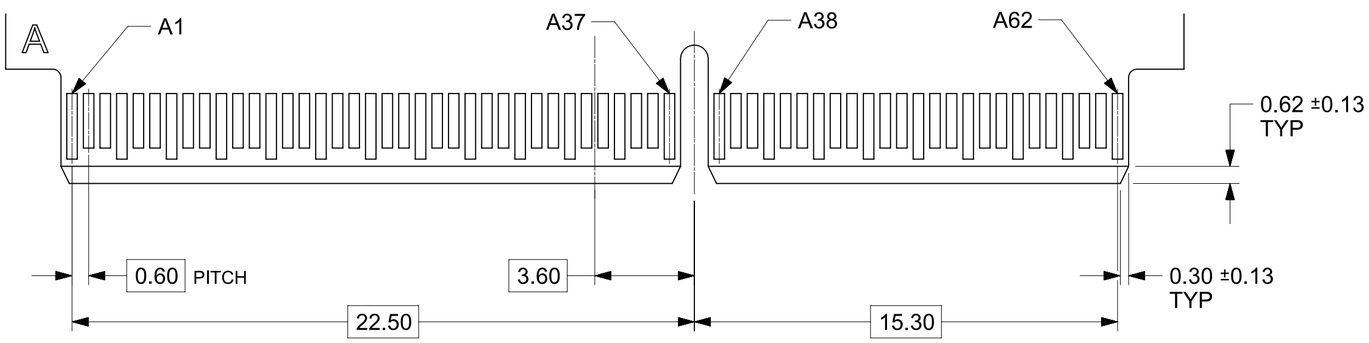

RECOMMENDED AIC MATING CARD DIMENSIONS
(GENERAL TOLERANCES: ±0.05)

FUNCTIONAL SYMBOLS	THIS DRAWING CONTAINS INFORMATION THAT IS PROPRIETARY TO MOLEX ELECTRONIC TECHNOLOGIES, LLC AND SHOULD NOT BE USED WITHOUT WRITTEN PERMISSION				
FA = 0	DIMENSION UNITS: MM	SCALE: 6:1	CURRENT REV DESC: SEE REVISION HISTORY		molex
FC = 0	GENERAL TOLERANCES (UNLESS SPECIFIED)				MCIO REC. VERTICAL 16X GEN5
FP = 0	ANGULAR TOL	± 2°			
DIVISIONAL SYMBOLS	4 PLACES	±			PRODUCT CUSTOMER DRAWING
	3 PLACES	± 0.1000	STATUS: Production		
	2 PLACES	± 0.200	DRWN: Sky Lee	2024-03-04	DOCUMENT NUMBER: 2170823011 / DOC TYPE: PSD / DOC PART: 001 / REVISION: E1
	1 PLACE	± 0.30	CHK'D: Sky Lee	2024-09-02	
	0 PLACES	±	APPR: Serway Yang	2024-09-02	
	DRAFT WHERE APPLICABLE MUST REMAIN WITHIN DIMENSIONS		THIRD ANGLE PROJECTION	DRAWING: C-SIZE / SERIES	MATERIAL NUMBER: SEE TABLE / CUSTOMER / SHEET NUMBER: 5 OF 6

FORMAT: TC-B-prod-C
REVISION: B
DATE: 2022/08/01

REVISION HISTORY

DATE	REVISION	DESCRIPTION
2021/09/06	A	INITIAL RELEASE
2022/01/07	B	1. ADD TRACE KEEP OUT AREA DIMENSIONS 0.50 AT G-1 AND 1.10 AT E-2 ON SHEET 3 2. ADD COMPONENT AND CABLE APPLICATION KEEP OUT AREA VIEWS ON SHEET 3
2023/04/25	C	SHEET 2 : CHANGE CAP DESIGN TO REMOVE THE HOLES AT VACUUM NOZZLE AREA ON SHEET 2
2023/04/25	D	SHEET 2 : CAP CAHNGE BACK TO OLD VERSION WITH 4 HOLES ON TOP, WAIT FOR PCN TO BE DONE,THEN REMOVE 4 HOLES AND RELEASE PSD AGAIN
2023/05/17	E	SHEET 2 : CHANGE CAP DESIGN TO REMOVE THE HOLES AT VACUUM NOZZLE AREA ON SHEET 2
2024/03/04	E1	ADDED THE SHEET 3 AS THE P/N TABLE OF OOC PRODUCTS

THIS DRAWING CONTAINS INFORMATION THAT IS PROPRIETARY TO MOLEX ELECTRONIC TECHNOLOGIES, LLC AND SHOULD NOT BE USED WITHOUT WRITTEN PERMISSION

FUNCTIONAL SYMBOLS
FA = 0
FC = 0
FP = 0

DIVISIONAL SYMBOLS

DIMENSION UNITS	SCALE
MM	1:1

GENERAL TOLERANCES (UNLESS SPECIFIED)

ANGULAR TOL	± 2°
4 PLACES	±
3 PLACES	± 0.1000
2 PLACES	± 0.200
1 PLACE	± 0.30
0 PLACES	±

DRAFT WHERE APPLICABLE MUST REMAIN WITHIN DIMENSIONS

CURRENT REV DESC: SEE REVISION HISTORY

STATUS: Production
DRWN: Sky Lee 2024-03-04
CHK'D: Sky Lee 2024-09-02
APPR: Serway Yang 2024-09-02

THIRD ANGLE PROJECTION | DRAWING: C-SIZE | SERIES

molex

MCIO REC. VERTICAL 16X GEN5

PRODUCT CUSTOMER DRAWING

DOCUMENT NUMBER	DOC TYPE	DOC PART	REVISION
2170823011	PSD	001	E1

MATERIAL NUMBER	CUSTOMER	SHEET NUMBER
SEE TABLE		6 OF 6