HOW TO REQUEST NEW PLATE CONFIGURATIONS
(SEE PART NUMBER TABLE FOR CURRENT RELEASED PLATES)
STANDARD (SHEET 2) OR HIGH DENSITY (SHEET 3) SPACING
RoHS YES (SILVER PLATING)/NO (TIN PLATING)
NUMBER OF ROWS
NUMBER OF LINES PER ROW (PLATE SIZE RESTRICTED, SEE SHEETS 2+3)
FILTER DESIGNATION (SEE FILTER DESIGNATION TABLE)
PLATE LENGTH (SEE TABLES ON SHEETS 2 + 3)
LEAD CONFIGURATION PER SHEETS 2 + 3: STRAIGHT (0), LEFT (1), RIGHT (2), BOTH (3)
SELECTIVE LINE FILTERING ALSO AVAILABLE, CONTACT MOLEX FOR CUSTOM CONFIGURATIONS

FILTER DESIGNATION SELECTION TABLE

Filter Designation	Filter*** Circuits	Capacitance		3 dB Max Cut-of Frequency (MHz)	Working Voltage DC -55°C to +125°C	Minimum Insertion Loss - Decibles (dB) 50ohm system per MIL-STD-220 (no load)							
		Value	Tolerance			5 MHZ	10 MHZ	20 MHZ	50 MHZ	100 MHZ	200 MHZ	500 MHZ	1 GHZ
A	C	68pF	+/-25%	73.9	100V	-	-	-	-	-	3	10	16
B	C	100pF	+/-25%	50.3	100V	-	-	-	-	1	6	13	19
C	C	135pF	+100/-0%	23.3	100V	-	-	-	1	5	10	16	20
D	C	470pF	+/-25%	10.7	100V	-	-	2	7	13	18	25	27
E	C	820pF	+/-25%	6.2	100V	-	1	5	12	18	23	30	33
F	C	1000pF	+/-25%	5.1	100V	-	2	7	14	20	25	32	35
G	C	1500pF	+/-25%	3.4	100V	1	4	10	16	22	29	36	37
H	C	2500pF	+100/-0%	1.26	100V	5	11	17	23	29	35	38	40
I	C	4000pF	+100/-0%	0.8	100V	9	15	21	27	34	38	42	46
J	Insulated	10pF	Max.	635	100V	-	-	-	-	-	-	-	-
K	Grounded					-	-	-	-	-	-	-	-
L	Pi	68	+/-25%	65.3	100V	-	-	-	-	1	3	8	19
M	Pi	100	+/-25%	45.1	100V	-	-	-	-	2	6	11	27
N	Pi	135	+100/-0%	22.0	100V	-	-	-	1	6	10	20	34
O	Pi	470	+/-25%	10.6	100V	-	-	-	8	14	21	36	43
P	Pi	820	+/-25%	6.2	100V	-	-	4	13	22	31	45	52
Q	Pi	1000	+/-25%	5.1	100V	-	2	6	14	22	33	51	59
R	Pi	1700	+100/-0%	1.9	100V	1	6	12	23	35	48	64	69
S	Pi	2500	+100/-0%	1.3	50V	4	9	15	28	41	54	70	70
T	Pi	5000	+100/-0%	0.65	100V	9	15	23	41	53	66	70	70

*** FOR HIGH DENSITY FILTER PLATES (2mm CENTERS) ONLY C STYLE FILTERS ARE AVAILABLE

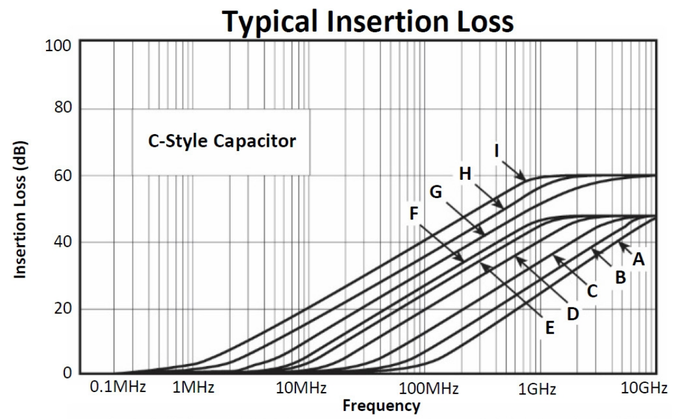

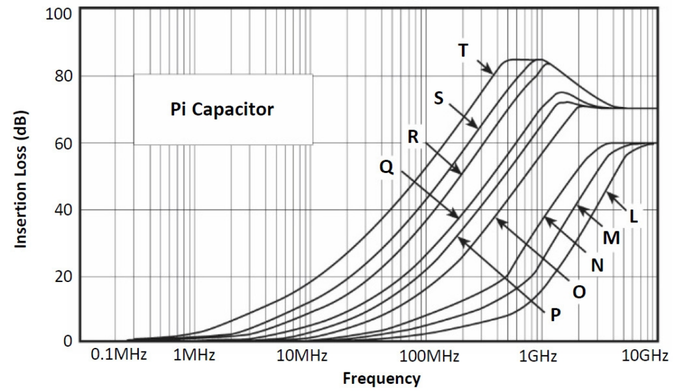

The above curves represent the application of proper grounding fundamentals.

NOTES:
1. MATERIALS:
   PLATE: BRASS PER UNS C26000/C27000
   LEADS: COPPER ALLOY
2. PLATING:
   PLATE:
   RoHS COMPLIANT: SILVER
   NON-RoHS COMPLIANT: MATTE TIN
   LEADS: GOLD
3. PLATES MARKED WITH: MOLEX, MOLEX P/N AND DATE CODE IN YYWW FORMAT

THIS DRAWING CONTAINS INFORMATION THAT IS PROPRIETARY TO MOLEX ELECTRONIC TECHNOLOGIES, LLC AND SHOULD NOT BE USED WITHOUT WRITTEN PERMISSION

FUNCTIONAL SYMBOLS
FA = 0
FC = 0
FP = 0
DIVISIONAL SYMBOLS

DIMENSION UNITS: INCH/mm
SCALE: NTS

GENERAL TOLERANCES (UNLESS SPECIFIED)

	MM	INCH
4 PLACES	±	±
3 PLACES	±	±
2 PLACES	±	±
1 PLACE	±	±
0 PLACES	±	±
ANGULAR TOL	± 0.5°	

DRAFT WHERE APPLICABLE MUST REMAIN WITHIN DIMENSIONS

CURRENT REV DESC: RELEASED

STATUS: Production
DRWN: Kevin Tagan 2024-08-20
CHK'D: Les Meier 2024-08-20
APPR: James Borrelli 2024-08-20

THIRD ANGLE PROJECTION | DRAWING: C-SIZE | SERIES: 73286

molex

BOLT-IN FILTER PLATES

PRODUCT CUSTOMER DRAWING

DOCUMENT NUMBER	DOC TYPE	DOC PART	REVISION
732860010	PSD	000	A

MATERIAL NUMBER	CUSTOMER	SHEET NUMBER
SEE TABLE	GENERAL MARKET	1 OF 4

FORMAT: 8in-TC-db-prod-C
REVISION: B
DATE: 2022/08/01

STANDARD DENSITY
.100 [2.54] CENTERS
LEAD DIAMETER = .025 [0.64]
CURRENT RATING: 5 AMPS

Plate length (A)	No. of fltered lines per row	STANDARD DENSITY	
		B	C
1.060* (26.92)	1	0 (0.00)	0.53 (13.46)
	2	0.1 (2.54)	0.43 (10.92)
	3	0.2 (5.08)	0.43 (10.92)
	4	0.3 (7.62)	0.33 (8.38)
	5	0.4 (10.16)	0.33 (8.38)
1.560* (39.62)	1	0 (0.00)	0.73 (18.54)
	2	0.1 (2.54)	0.73 (18.54)
	3	0.2 (5.08)	0.63 (16.00)
	4	0.3 (7.62)	0.63 (16.00)
	5	0.4 (10.16)	0.53 (13.46)
	6	0.5 (12.70)	0.53 (13.46)
	7	0.6 (15.24)	0.43 (10.92)
	8	0.7 (17.78)	0.43 (10.92)
	9	0.8 (20.32)	0.33 (8.38)
	10	0.9 (22.86)	0.33 (8.38)
2.560 (65.02)	5	0.4 (10.16)	1.03 (26.16)
	6	0.5 (12.70)	1.03 (26.16)
	7	0.6 (15.24)	0.93 (23.62)
	8	0.7 (17.78)	0.93 (23.62)
	9	0.8 (20.32)	0.83 (21.08)
	10	0.9 (22.86)	0.83 (21.08)
	11	1.0 (25.40)	0.73 (18.54)
	12	1.1 (27.94)	0.73 (18.54)
	13	1.2 (30.48)	0.63 (16.00)
	14	1.3 (33.02)	0.63 (16.00)
	15	1.4 (35.56)	0.53 (13.46)
	16	1.5 (38.10)	0.53 (13.46)
	17	1.6 (40.65)	0.43 (10.92)
	18	1.7 (43.18)	0.43 (10.92)
	19	1.8 (45.72)	0.33 (8.38)
	20	1.9 (48.26)	0.33 (8.38)
3.560 (90.42)	13	1.2 (30.48)	1.13 (27.70)
	14	1.3 (33.02)	1.13 (27.70)
	15	1.4 (35.56)	1.03 (26.16)
	16	1.5 (38.10)	1.03 (26.16)
	17	1.6 (40.65)	0.93 (23.62)
	18	1.7 (43.18)	0.93 (23.62)
	19	1.8 (45.72)	0.83 (21.08)
	20	1.9 (48.26)	0.83 (21.08)
	21	2.0 (50.80)	0.73 (18.54)
	22	2.1 (53.34)	0.73 (18.54)
	23	2.2 (55.88)	0.63 (16.00)
	24	2.3 (55.42)	0.63 (16.00)
	25	2.4 (60.96)	0.53 (13.46)
	26	2.5 (63.50)	0.53 (13.46)
	27	2.6 (66.04)	0.43 (10.92)
	28	2.7 (68.58)	0.43 (10.92)
	29	2.8 (71.12)	0.33 (8.38)
	30	2.9 (73.66)	0.33 (8.38)

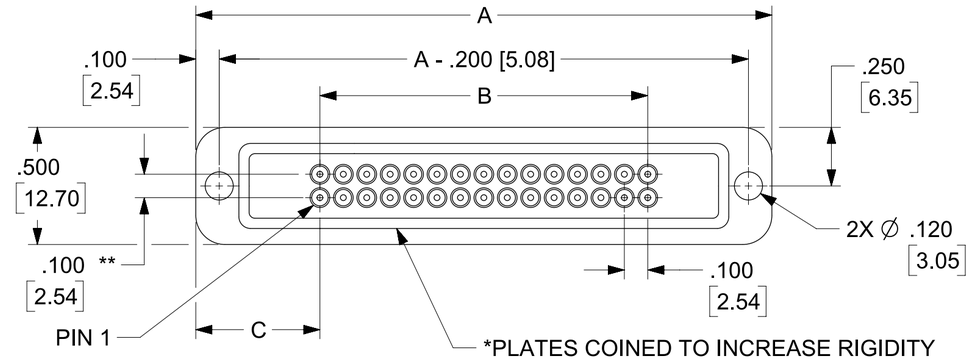

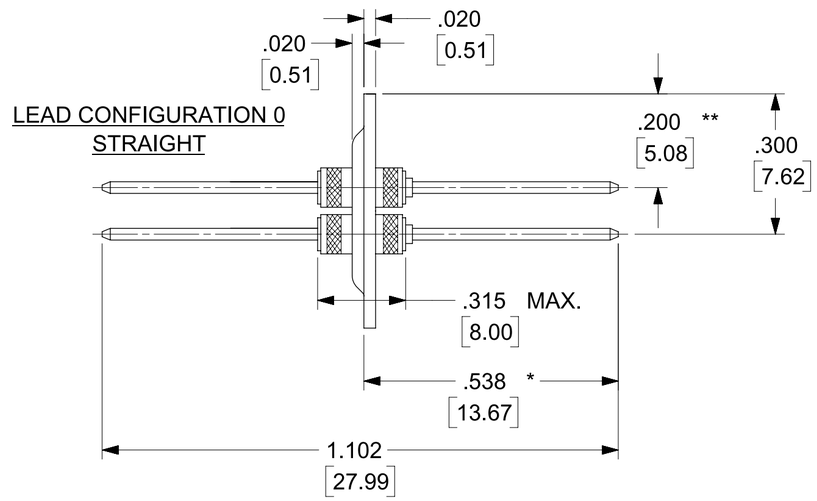

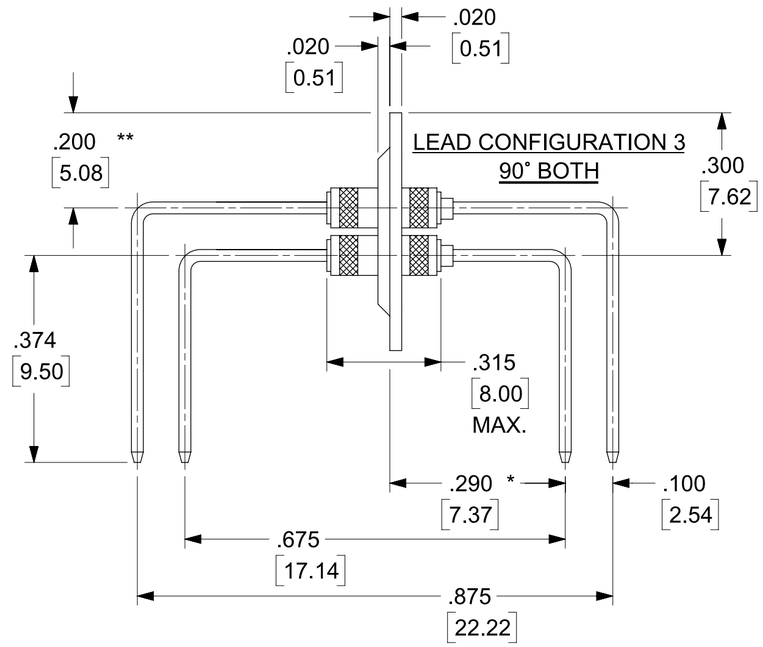

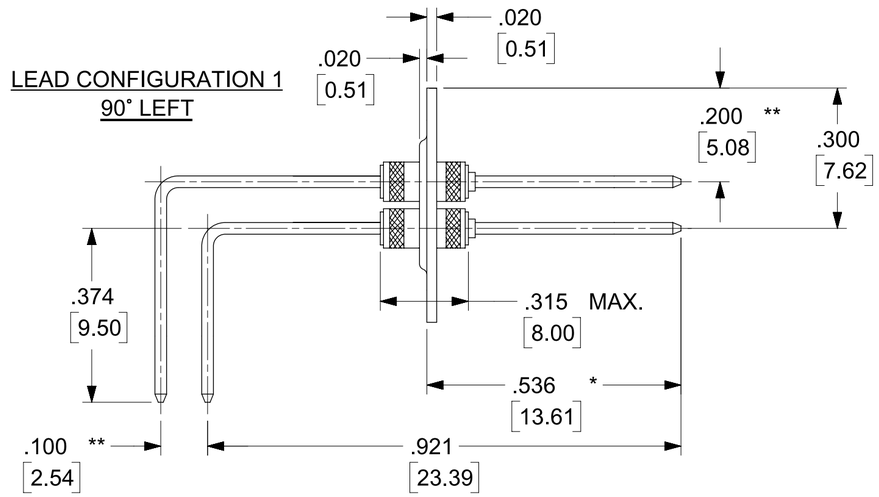

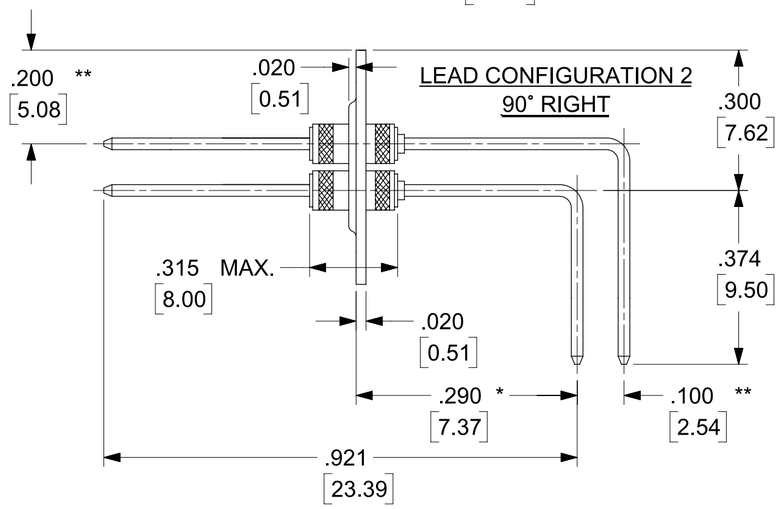

* 1.060 (26.92) AND 1.560 (39.62) LONG PLATES DO NOT HAVE COINING. INCREASE THESE DIMENSIONS BY .020 (0.51) IF USING THESE SIZED PLATES

** DIMENSION NOT APPLICAPIBLE FOR SINGLE ROW DESIGNS

THIS DRAWING CONTAINS INFORMATION THAT IS PROPRIETARY TO MOLEX ELECTRONIC TECHNOLOGIES, LLC AND SHOULD NOT BE USED WITHOUT WRITTEN PERMISSION

FUNCTIONAL SYMBOLS: FA = 0, FC = 0, FP = 0
DIVISIONAL SYMBOLS

DIMENSION UNITS: INCH/mm
SCALE: NTS

GENERAL TOLERANCES (UNLESS SPECIFIED)

	MM	INCH
4 PLACES	±	±
3 PLACES	±	±
2 PLACES	±	±
1 PLACE	±	±
0 PLACES	±	±
ANGULAR TOL	± 0.5˚	

DRAFT WHERE APPLICABLE MUST REMAIN WITHIN DIMENSIONS

CURRENT REV DESC: RELEASED

STATUS: Production
DRWN: Kevin Tagan 2024-08-20
CHK'D: Les Meier 2024-08-20
APPR: James Borrelli 2024-08-20

THIRD ANGLE PROJECTION | DRAWING: C-SIZE | SERIES: 73286

molex

BOLT-IN FILTER PLATES

PRODUCT CUSTOMER DRAWING

DOCUMENT NUMBER	DOC TYPE	DOC PART	REVISION
732860010	PSD	000	A

MATERIAL NUMBER	CUSTOMER	SHEET NUMBER
SEE TABLE	GENERAL MARKET	2 OF 4

FORMAT: IN-TC-dbl-prod-C
REVISION: B
DATE: 2022/08/01

HIGH DENSITY
.079 [2.00] CENTERS
LEAD DIAMETER = .020 [0.51]
CURRENT RATING: 3 AMPS

Plate length (A)	No. of fltered lines per row	HIGH DENSITY	
		B	C
1.060* (26.92)	2	0.079 (2.00)	0.487 (12.38)
	3	0.157 (4.00)	0.409 (10.38)
	4	0.236 (6.00)	0.409 (10.38)
	5	0.315 (8.00)	0.330 (8.38)
	6	0.394 (10.00)	0.330 (8.38)
1.560* (39.62)	3	0.157 (4.00)	0.662 (16.81)
	4	0.236 (6.00)	0.662 (16.81)
	5	0.315 (8.00)	0.583 (14.81)
	6	0.394 (10.00)	0.583 (14.81)
	7	0.472 (12.00)	0.504 (12.81)
	8	0.551 (14.00)	0.504 (12.81)
	9	0.630 (16.00)	0.426 (10.81)
	10	0.709 (18.00)	0.426 (10.81)
	11	0.787 (20.00)	0.347 (8.81)
	12	0.866 (22.00)	0.347 (8.81)
2.560 (65.02)	10	0.709 (18.00)	0.886 (22.51)
	11	0.787 (20.00)	0.886 (22.51)
	12	0.866 (22.00)	0.807 (20.51)
	13	0.945 (24.00)	0.807 (20.51)
	14	1.024 (26.00)	0.729 (18.51)
	15	1.102 (28.00)	0.729 (18.51)
	16	1.181 (30.00)	0.650 (16.51)
	17	1.260 (32.00)	0.650 (16.51)
	18	1.339 (34.00)	0.571 (14.51)
	19	1.417 (36.00)	0.571 (14.51)
	20	1.496 (38.00)	0.492 (12.51)
	21	1.575 (40.00)	0.492 (12.51)
	22	1.654 (42.00)	0.414 (10.51)
	23	1.732 (44.00)	0.414 (10.51)
	24	1.811 (46.00)	0.335 (8.51)
	25	1.890 (48.00)	0.335 (8.51)
3.560 (90.42)	20	1.496 (38.00)	0.993 (25.22)
	21	1.575 (40.00)	0.993 (25.22)
	22	1.654 (42.00)	0.914 (23.22)
	23	1.732 (44.00)	0.914 (23.22)
	24	1.811 (46.00)	0.835 (21.22)
	25	1.890 (48.00)	0.835 (21.22)
	26	1.969 (50.00)	0.757 (19.22)
	27	2.047 (52.00)	0.757 (19.22)
	28	2.126 (54.00)	0.678 (17.22)
	29	2.205 (56.00)	0.678 (17.22)
	30	2.283 (58.00)	0.599 (15.22)
	31	2.362 (60.00)	0.599 (15.22)
	32	2.441 (62.00)	0.520 (13.22)
	33	2.520 (64.00)	0.520 (13.22)
	34	2.598 (66.00)	0.442 (11.22)
	35	2.677(68.00)	0.442 (11.22)
	36	2.756 (70.00)	0.363 (9.22)
	37	2.835(72.00)	0.363 (9.22)

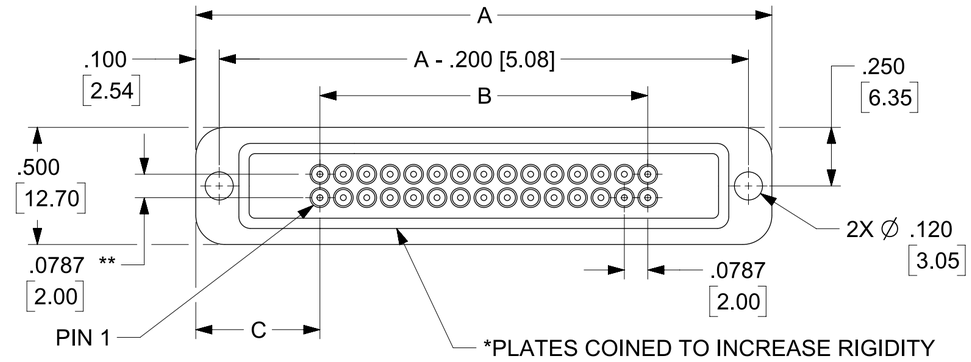

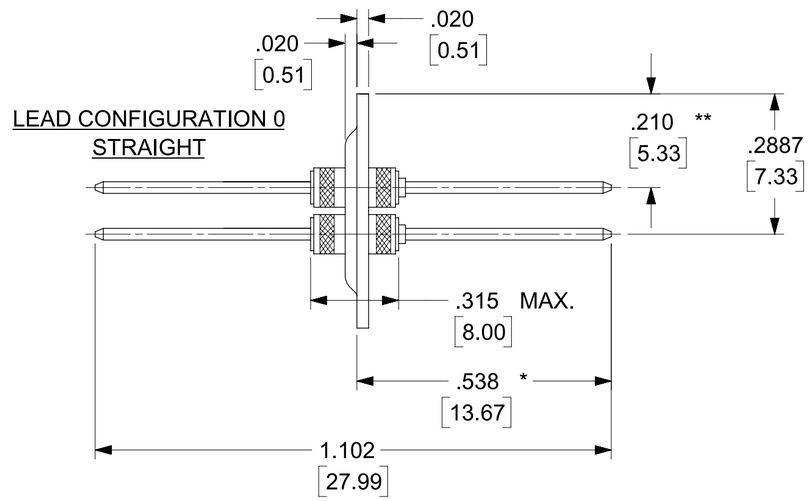

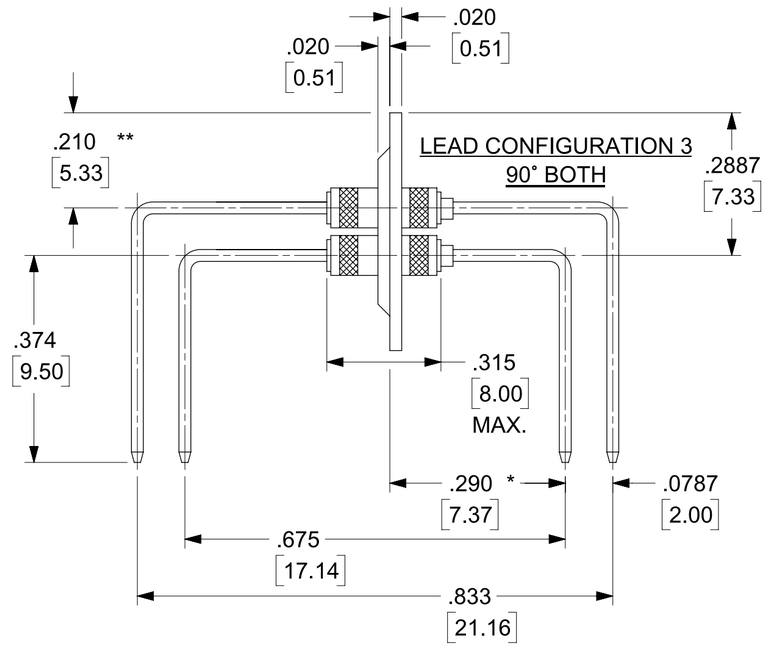

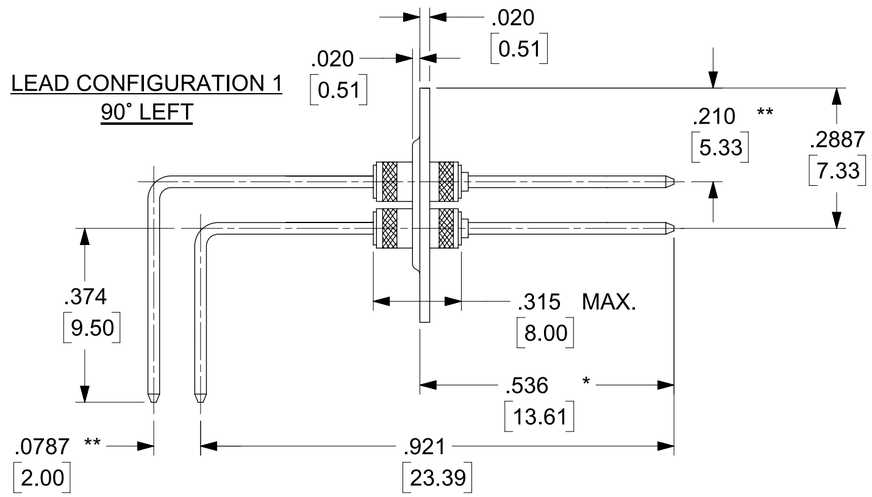

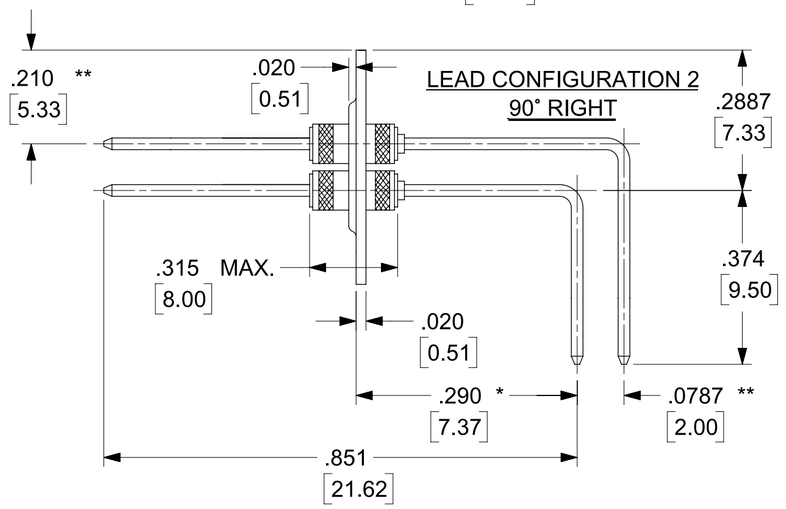

* 1.060 (26.92) AND 1.560 (39.62) LONG PLATES DO NOT HAVE COINING. INCREASE THESE DIMENSIONS BY .020 (0.51) IF USING THESE SIZED PLATES

** DIMENSION NOT APPLICAPIBLE FOR SINGLE ROW DESIGNS

FUNCTIONAL SYMBOLS: FA = 0, FC = 0, FP = 0

DIVISIONAL SYMBOLS

THIS DRAWING CONTAINS INFORMATION THAT IS PROPRIETARY TO MOLEX ELECTRONIC TECHNOLOGIES, LLC AND SHOULD NOT BE USED WITHOUT WRITTEN PERMISSION

DIMENSION UNITS: INCH/mm
SCALE: NTS

GENERAL TOLERANCES (UNLESS SPECIFIED)

	MM	INCH
4 PLACES	±	±
3 PLACES	±	±
2 PLACES	±	±
1 PLACE	±	±
0 PLACES	±	±
ANGULAR TOL	± 0.5°	

DRAFT WHERE APPLICABLE MUST REMAIN WITHIN DIMENSIONS

CURRENT REV DESC: RELEASED

STATUS: Production
DRWN: Kevin Tagan 2024-08-20
CHK'D: Les Meier 2024-08-20
APPR: James Borrelli 2024-08-20

THIRD ANGLE PROJECTION | DRAWING: C-SIZE | SERIES: 73286

molex

BOLT-IN FILTER PLATES

PRODUCT CUSTOMER DRAWING

DOCUMENT NUMBER	DOC TYPE	DOC PART	REVISION
732860010	PSD	000	A

MATERIAL NUMBER	CUSTOMER	SHEET NUMBER
SEE TABLE	GENERAL MARKET	3 OF 4

FORMAT: IN-TC-dbl-prod-C
REVISION: B
DATE: 2022/08/01

PART NUMBER TABLE

Filter Plate Density	Molex Part Number	Plate Length	ROWS	PINS PER ROW	Filter Circuit	Cap Value	Lead Config.	RoHS
Bolt-in High Density Filter Plate	0732860010	1.060 in (26.92mm)	1	4	C	1500pF	90° (both)	No
Bolt-in High Density Filter Plate	0732860020	1.060 in (26.92mm)	2	5	C	135pF	Straight	No
Bolt-in High Density Filter Plate	0732860030	1.060 in (26.92mm)	2	6	C	100pF	Straight	No
Bolt-in Std. Filter Plate	0732860040	1.060 in (26.92mm)	1	3	Pi	1000pF	90° (left)	Yes
Bolt-in Std. Filter Plate	0732860050	1.060 in (26.92mm)	1	5	C	100pF	Straight	No
Bolt-in Std. Filter Plate	0732860060	1.060 in (26.92mm)	1	5	Pi	1000pF	90° (both)	No
Bolt-in Std. Filter Plate	0732860070	1.060 in (26.92mm)	2	3	INS	10pF max.	Straight	No
Bolt-in Std. Filter Plate	0732860080	1.060 in (26.92mm)	2	3	Pi	5000pF	Straight	Yes
Bolt-in Std. Filter Plate	0732860090	1.060 in (26.92mm)	2	5	C	1000pF	90° (both)	No
Bolt-in Std. Filter Plate	0732860100	1.060 in (26.92mm)	2	5	C	1000pF	90° (left)	No
Bolt-in Std. Filter Plate	0732860110	1.060 in (26.92mm)	2	5	C	100pF	Straight	Yes
Bolt-in Std. Filter Plate	0732860120	1.060 in (26.92mm)	2	5	C	2500pF	90° (left)	No
Bolt-in Std. Filter Plate	0732860130	1.060 in (26.92mm)	2	5	C	4000pF	90° (right)	Yes
Bolt-in Std. Filter Plate	0732860140	1.060 in (26.92mm)	2	5	Pi	1000pF	Straight	No
Bolt-in Std. Filter Plate	0732860150	1.060 in (26.92mm)	2	5	Pi	1700pF	Straight	No
Bolt-in High Density Filter Plate	0732860160	1.560 in (39.62mm)	1	8	C	1500pF	Straight	No
Bolt-in High Density Filter Plate	0732860170	1.560 in (39.62mm)	2	10	C	135pF	Straight	No
Bolt-in High Density Filter Plate	0732860180	1.560 in (39.62mm)	2	10	C	2500pF	Straight	No
Bolt-in Std. Filter Plate	0732860190	1.560 in (39.62mm)	1	8	Pi	1700pF	Straight	Yes
Bolt-in Std. Filter Plate	0732860200	1.560 in (39.62mm)	1	8	Pi	2500pF	Straight	No
Bolt-in Std. Filter Plate	0732860210	1.560 in (39.62mm)	2	6	C	100pF	Straight	Yes
Bolt-in Std. Filter Plate	0732860220	1.560 in (39.62mm)	2	6	Pi	5000pF	Straight	No
Bolt-in Std. Filter Plate	0732860230	1.560 in (39.62mm)	2	7	C	100pF	Straight	Yes
Bolt-in Std. Filter Plate	0732860240	1.560 in (39.62mm)	2	8	C	1000pF	90° (left)	No
Bolt-in Std. Filter Plate	0732860250	1.560 in (39.62mm)	2	8	Pi	5000pF	Straight	No
Bolt-in Std. Filter Plate	0732860260	1.560 in (39.62mm)	2	9	C	100pF	Straight	Yes
Bolt-in Std. Filter Plate	0732860270	1.560 in (39.62mm)	2	10	C	1000pF	90° (left)	No
Bolt-in Std. Filter Plate	0732860280	1.560 in (39.62mm)	2	10	C	1000pF	Straight	No
Bolt-in Std. Filter Plate	0732860290	1.560 in (39.62mm)	2	10	C	100pF	Straight	No
Bolt-in Std. Filter Plate	0732860300	1.560 in (39.62mm)	2	10	Pi	1000pF	90° (right)	No
Bolt-in Std. Filter Plate	0732860310	1.560 in (39.62mm)	2	10	Pi	1700pF	Straight	No
Bolt-in Std. Filter Plate	0732860320	1.560 in (39.62mm)	2	10	Pi	5000pF	Straight	Yes
Bolt-in High Density Filter Plate	0732860330	2.560 in (65.02mm)	2	25	C	1000pF	Straight	No
Bolt-in Std. Filter Plate	0732860340	2.560 in (65.02mm)	2	12	C	100pF	Straight	Yes
Bolt-in Std. Filter Plate	0732860350	2.560 in (65.02mm)	2	15	C	100pF	Straight	No
Bolt-in Std. Filter Plate	0732860360	2.560 in (65.02mm)	2	15	Pi	5000pF	90° (both)	No
Bolt-in Std. Filter Plate	0732860370	2.560 in (65.02mm)	2	16	C	1000pF	90° (left)	No
Bolt-in Std. Filter Plate	0732860380	2.560 in (65.02mm)	2	18	C	1000pF	Straight	No
Bolt-in Std. Filter Plate	0732860390	2.560 in (65.02mm)	2	20	C	68pF	Straight	No
Bolt-in Std. Filter Plate	0732860400	2.560 in (65.02mm)	2	20	Pi	100pF	90° (left)	No
Bolt-in Std. Filter Plate	0732860410	2.560 in (65.02mm)	2	20	Pi	100pF	Straight	No
Bolt-in Std. Filter Plate	0732860420	2.560 in (65.02mm)	2	20	Pi	1700pF	90° (left)	No
Bolt-in Std. Filter Plate	0732860430	3.560 (90.42mm)	2	25	Pi	1000pF	Straight	No
Bolt-in Std. Filter Plate	0732860440	3.560 (90.42mm)	2	25	Pi	2500pF	Straight	No

FUNCTIONAL SYMBOLS
FA = 0
FC = 0
FP = 0
DIVISIONAL SYMBOLS

THIS DRAWING CONTAINS INFORMATION THAT IS PROPRIETARY TO MOLEX ELECTRONIC TECHNOLOGIES, LLC AND SHOULD NOT BE USED WITHOUT WRITTEN PERMISSION

DIMENSION UNITS: INCH/mm
SCALE: NTS

GENERAL TOLERANCES (UNLESS SPECIFIED)

	MM	INCH
4 PLACES	±	±
3 PLACES	±	±
2 PLACES	±	±
1 PLACE	±	±
0 PLACES	±	±
ANGULAR TOL	± 0.5°	

DRAFT WHERE APPLICABLE MUST REMAIN WITHIN DIMENSIONS

CURRENT REV DESC: RELEASED

STATUS: Production
DRWN: Kevin Tagan 2024-08-20
CHK'D: Les Meier 2024-08-20
APPR: James Borrelli 2024-08-20

THIRD ANGLE PROJECTION | DRAWING: C-SIZE | SERIES: 73286

molex

BOLT-IN FILTER PLATES

PRODUCT CUSTOMER DRAWING

DOCUMENT NUMBER	DOC TYPE	DOC PART	REVISION
732860010	PSD	000	A

MATERIAL NUMBER	CUSTOMER	SHEET NUMBER
SEE TABLE	GENERAL MARKET	4 OF 4

FORMAT: tfn-TC-tb-prod-C
REVISION: B
DATE: 2022/08/01

HOW TO REQUEST NEW PLATE CONFIGURATIONS
(SEE PART NUMBER TABLE FOR CURRENT RELEASED PLATES)
STANDARD (SHEET 2) OR HIGH DENSITY (SHEET 3) SPACING
RoHS YES (SILVER PLATING)/NO (TIN PLATING)
NUMBER OF ROWS
NUMBER OF LINES PER ROW (PLATE SIZE RESTRICTED, SEE SHEETS 2+3)
FILTER DESIGNATION (SEE FILTER DESIGNATION TABLE)
PLATE LENGTH (SEE TABLES ON SHEETS 2 + 3)
LEAD CONFIGURATION PER SHEETS 2 + 3: STRAIGHT (0), LEFT (1), RIGHT (2), BOTH (3)
SELECTIVE LINE FILTERING ALSO AVAILABLE, CONTACT MOLEX FOR CUSTOM CONFIGURATIONS

FILTER DESIGNATION SELECTION TABLE

Filter Designation	Filter*** Circuits	Capacitance		3 dB Max Cut-of Frequency (MHz)	Working Voltage DC -55°C to +125°C	Minimum Insertion Loss - Decibles (dB) 50ohm system per MIL-STD-220 (no load)							
		Value	Tolerance			5 MHZ	10 MHZ	20 MHZ	50 MHZ	100 MHZ	200 MHZ	500 MHZ	1 GHZ
A	C	68pF	+/-25%	73.9	100V	-	-	-	-	-	3	10	16
B	C	100pF	+/-25%	50.3	100V	-	-	-	-	1	6	13	19
C	C	135pF	+100/-0%	23.3	100V	-	-	-	1	5	10	16	20
D	C	470pF	+/-25%	10.7	100V	-	-	2	7	13	18	25	27
E	C	820pF	+/-25%	6.2	100V	-	1	5	12	18	23	30	33
F	C	1000pF	+/-25%	5.1	100V	-	2	7	14	20	25	32	35
G	C	1500pF	+/-25%	3.4	100V	1	4	10	16	22	29	36	37
H	C	2500pF	+100/-0%	1.26	100V	5	11	17	23	29	35	38	40
I	C	4000pF	+100/-0%	0.8	100V	9	15	21	27	34	38	42	46
J	Insulated	10pF	Max.	635	100V	-	-	-	-	-	-	-	-
K	Grounded					-	-	-	-	-	-	-	-
L	Pi	68	+/-25%	65.3	100V	-	-	-	-	1	3	8	19
M	Pi	100	+/-25%	45.1	100V	-	-	-	-	2	6	11	27
N	Pi	135	+100/-0%	22.0	100V	-	-	-	1	6	10	20	34
O	Pi	470	+/-25%	10.6	100V	-	-	-	8	14	21	36	43
P	Pi	820	+/-25%	6.2	100V	-	-	4	13	22	31	45	52
Q	Pi	1000	+/-25%	5.1	100V	-	2	6	14	22	33	51	59
R	Pi	1700	+100/-0%	1.9	100V	1	6	12	23	35	48	64	69
S	Pi	2500	+100/-0%	1.3	50V	4	9	15	28	41	54	70	70
T	Pi	5000	+100/-0%	0.65	100V	9	15	23	41	53	66	70	70

*** FOR HIGH DENSITY FILTER PLATES (2mm CENTERS) ONLY C STYLE FILTERS ARE AVAILABLE

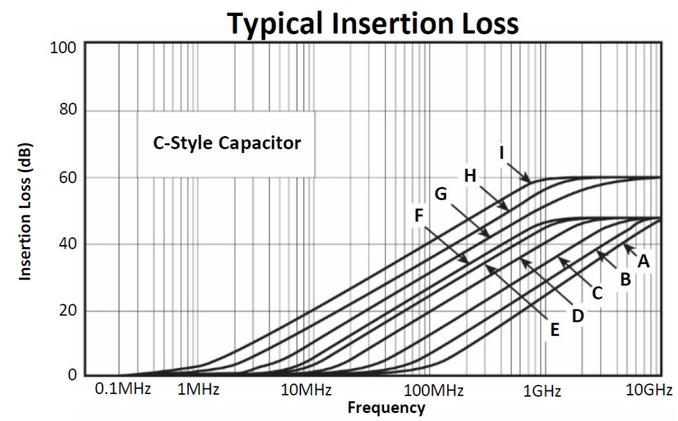

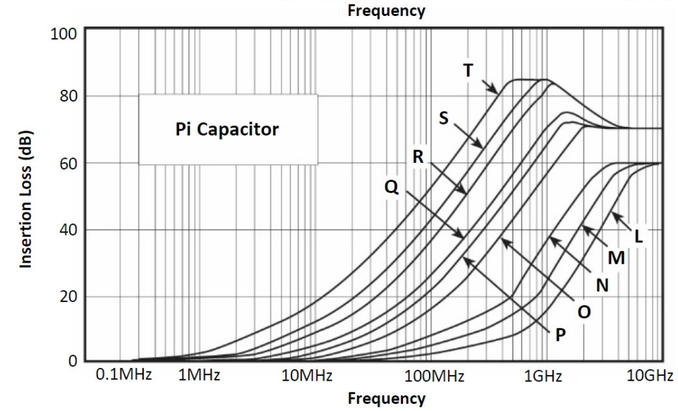

The above curves represent the application of proper grounding fundamentals.

NOTES:
1. MATERIALS:
   PLATE: BRASS PER UNS C26000/C27000
   LEADS: COPPER ALLOY
2. PLATING:
   PLATE:
   RoHS COMPLIANT: SILVER
   NON-RoHS COMPLIANT: MATTE TIN
   LEADS: GOLD
3. PLATES MARKED WITH: MOLEX, MOLEX P/N AND DATE CODE IN YYWW FORMAT

THIS DRAWING CONTAINS INFORMATION THAT IS PROPRIETARY TO MOLEX ELECTRONIC TECHNOLOGIES, LLC AND SHOULD NOT BE USED WITHOUT WRITTEN PERMISSION

FUNCTIONAL SYMBOLS: FA = 0, FC = 0, FP = 0
DIVISIONAL SYMBOLS

DIMENSION UNITS: INCH/mm
SCALE: NTS

GENERAL TOLERANCES (UNLESS SPECIFIED)

	MM	INCH
4 PLACES	±	±
3 PLACES	±	±
2 PLACES	±	±
1 PLACE	±	±
0 PLACES	±	±
ANGULAR TOL	± 0.5°	

DRAFT WHERE APPLICABLE MUST REMAIN WITHIN DIMENSIONS

CURRENT REV DESC: RELEASED

STATUS: Production
DRWN: Kevin Tagan 2024-08-14
CHK'D: Les Meier 2024-08-19
APPR: James Borrelli 2024-08-19

THIRD ANGLE PROJECTION | DRAWING: C-SIZE | SERIES: 73287

molex

BOLT-IN FILTER PLATES

PRODUCT CUSTOMER DRAWING

DOCUMENT NUMBER	DOC TYPE	DOC PART	REVISION
732870010	PSD	000	A

MATERIAL NUMBER	CUSTOMER	SHEET NUMBER
SEE TABLE	GENERAL MARKET	1 OF 4

FORMAT: 8x-TC-B-prod-C
REVISION: B
DATE: 2022/08/01

STANDARD DENSITY
.100 [2.54] CENTERS
LEAD DIAMETER = .025 [0.64]
CURRENT RATING: 5 AMPS

Plate length (A)	No. of fltered lines per row	STANDARD DENSITY	
		B	C
1.060* (26.92)	1	0 (0.00)	0.53 (13.46)
	2	0.1 (2.54)	0.43 (10.92)
	3	0.2 (5.08)	0.43 (10.92)
	4	0.3 (7.62)	0.33 (8.38)
	5	0.4 (10.16)	0.33 (8.38)
1.560* (39.62)	1	0 (0.00)	0.73 (18.54)
	2	0.1 (2.54)	0.73 (18.54)
	3	0.2 (5.08)	0.63 (16.00)
	4	0.3 (7.62)	0.63 (16.00)
	5	0.4 (10.16)	0.53 (13.46)
	6	0.5 (12.70)	0.53 (13.46)
	7	0.6 (15.24)	0.43 (10.92)
	8	0.7 (17.78)	0.43 (10.92)
	9	0.8 (20.32)	0.33 (8.38)
	10	0.9 (22.86)	0.33 (8.38)
2.560 (65.02)	5	0.4 (10.16)	1.03 (26.16)
	6	0.5 (12.70)	1.03 (26.16)
	7	0.6 (15.24)	0.93 (23.62)
	8	0.7 (17.78)	0.93 (23.62)
	9	0.8 (20.32)	0.83 (21.08)
	10	0.9 (22.86)	0.83 (21.08)
	11	1.0 (25.40)	0.73 (18.54)
	12	1.1 (27.94)	0.73 (18.54)
	13	1.2 (30.48)	0.63 (16.00)
	14	1.3 (33.02)	0.63 (16.00)
	15	1.4 (35.56)	0.53 (13.46)
	16	1.5 (38.10)	0.53 (13.46)
	17	1.6 (40.65)	0.43 (10.92)
	18	1.7 (43.18)	0.43 (10.92)
	19	1.8 (45.72)	0.33 (8.38)
	20	1.9 (48.26)	0.33 (8.38)
3.560 (90.42)	13	1.2 (30.48)	1.13 (27.70)
	14	1.3 (33.02)	1.13 (27.70)
	15	1.4 (35.56)	1.03 (26.16)
	16	1.5 (38.10)	1.03 (26.16)
	17	1.6 (40.65)	0.93 (23.62)
	18	1.7 (43.18)	0.93 (23.62)
	19	1.8 (45.72)	0.83 (21.08)
	20	1.9 (48.26)	0.83 (21.08)
	21	2.0 (50.80)	0.73 (18.54)
	22	2.1 (53.34)	0.73 (18.54)
	23	2.2 (55.88)	0.63 (16.00)
	24	2.3 (55.42)	0.63 (16.00)
	25	2.4 (60.96)	0.53 (13.46)
	26	2.5 (63.50)	0.53 (13.46)
	27	2.6 (66.04)	0.43 (10.92)
	28	2.7 (68.58)	0.43 (10.92)
	29	2.8 (71.12)	0.33 (8.38)
	30	2.9 (73.66)	0.33 (8.38)

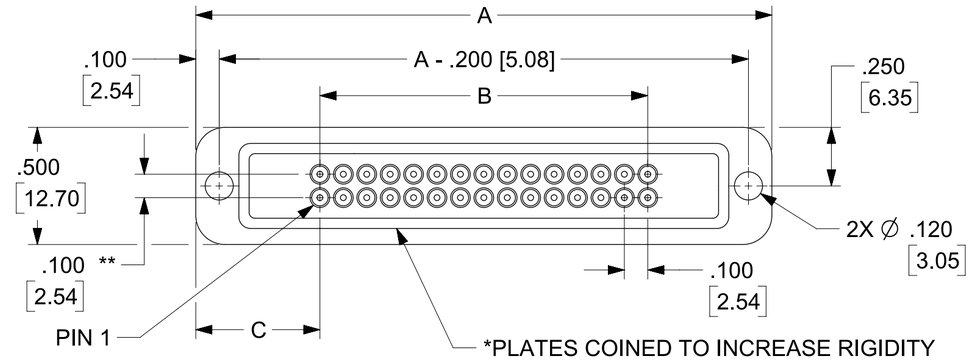

LEAD CONFIGURATION 0
STRAIGHT

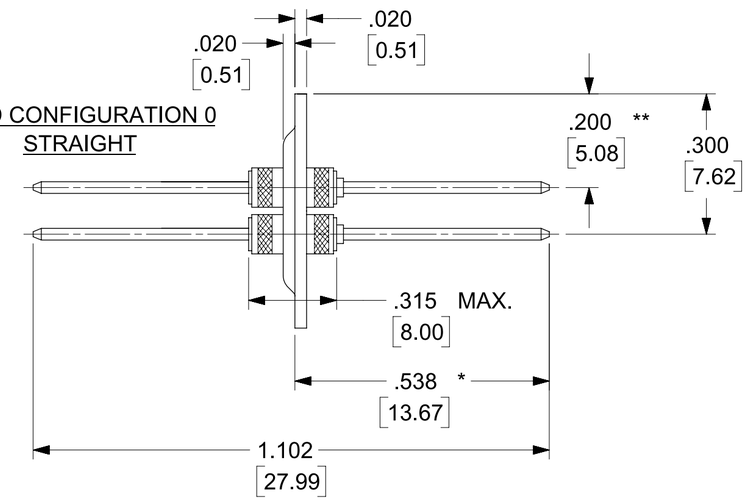

LEAD CONFIGURATION 3
90˚ BOTH

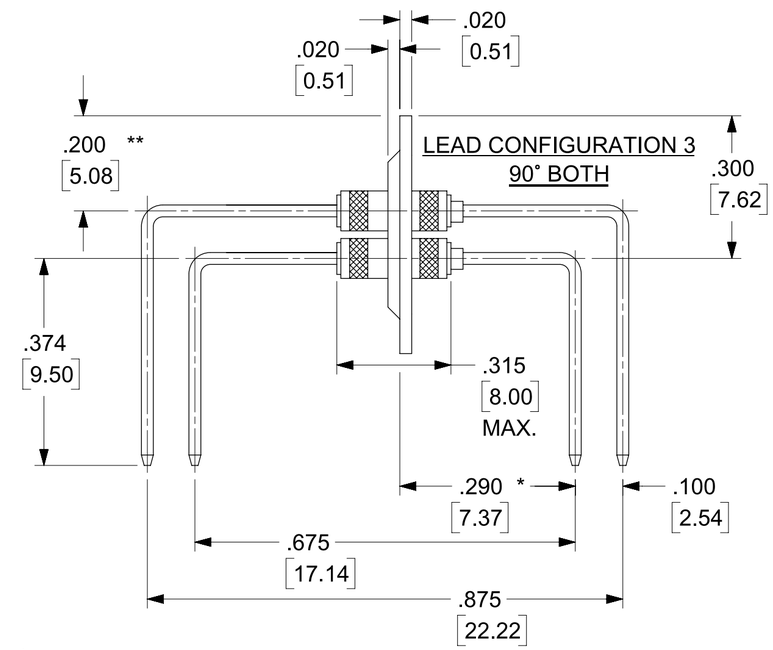

LEAD CONFIGURATION 1
90˚ LEFT

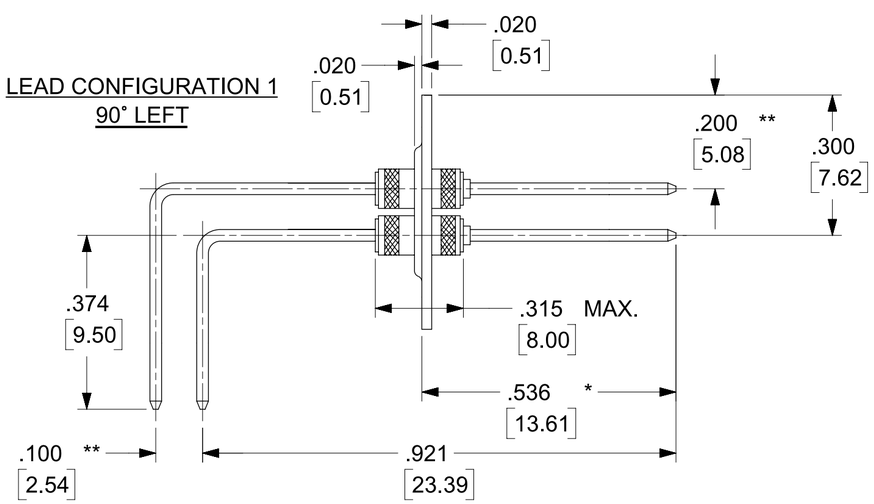

LEAD CONFIGURATION 2
90˚ RIGHT

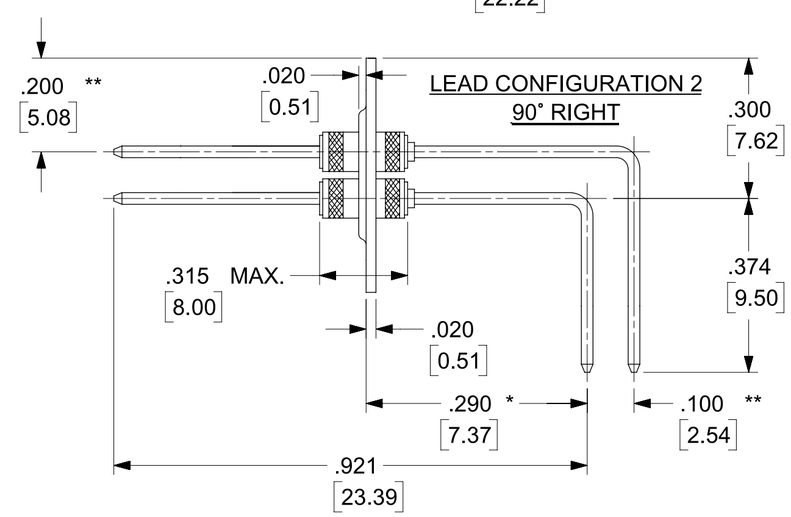

* 1.060 (26.92) AND 1.560 (39.62) LONG PLATES DO NOT HAVE COINING. INCREASE THESE DIMENSIONS BY .020 (0.51) IF USING THESE SIZED PLATES
** DIMENSION NOT APPLICAPIBLE FOR SINGLE ROW DESIGNS

FUNCTIONAL SYMBOLS
FA = 0
FC = 0
FP = 0
DIVISIONAL SYMBOLS

THIS DRAWING CONTAINS INFORMATION THAT IS PROPRIETARY TO MOLEX ELECTRONIC TECHNOLOGIES, LLC AND SHOULD NOT BE USED WITHOUT WRITTEN PERMISSION

DIMENSION UNITS: INCH/mm
SCALE: NTS

GENERAL TOLERANCES (UNLESS SPECIFIED)

	MM	INCH
4 PLACES	±	±
3 PLACES	±	±
2 PLACES	±	±
1 PLACE	±	±
0 PLACES	±	±
ANGULAR TOL	± 0.5˚	

DRAFT WHERE APPLICABLE MUST REMAIN WITHIN DIMENSIONS

CURRENT REV DESC: RELEASED

STATUS: Production
DRWN: Kevin Tagan 2024-08-14
CHK'D: Les Meier 2024-08-19
APPR: James Borrelli 2024-08-19

THIRD ANGLE PROJECTION | DRAWING: C-SIZE | SERIES: 73287

molex

BOLT-IN FILTER PLATES

PRODUCT CUSTOMER DRAWING

DOCUMENT NUMBER	DOC TYPE	DOC PART	REVISION
732870010	PSD	000	A

MATERIAL NUMBER	CUSTOMER	SHEET NUMBER
SEE TABLE	GENERAL MARKET	2 OF 4

FORMAT: IN-TC-dbl-prod-C
REVISION: B
DATE: 2022/08/01

HIGH DENSITY
.079 [2.00] CENTERS
LEAD DIAMETER = .020 [0.51]
CURRENT RATING: 3 AMPS

Plate length (A)	No. of fltered lines per row	HIGH DENSITY	
		B	C
1.060* (26.92)	2	0.079 (2.00)	0.487 (12.38)
	3	0.157 (4.00)	0.409 (10.38)
	4	0.236 (6.00)	0.409 (10.38)
	5	0.315 (8.00)	0.330 (8.38)
	6	0.394 (10.00)	0.330 (8.38)
1.560* (39.62)	3	0.157 (4.00)	0.662 (16.81)
	4	0.236 (6.00)	0.662 (16.81)
	5	0.315 (8.00)	0.583 (14.81)
	6	0.394 (10.00)	0.583 (14.81)
	7	0.472 (12.00)	0.504 (12.81)
	8	0.551 (14.00)	0.504 (12.81)
	9	0.630 (16.00)	0.426 (10.81)
	10	0.709 (18.00)	0.426 (10.81)
	11	0.787 (20.00)	0.347 (8.81)
	12	0.866 (22.00)	0.347 (8.81)
2.560 (65.02)	10	0.709 (18.00)	0.886 (22.51)
	11	0.787 (20.00)	0.886 (22.51)
	12	0.866 (22.00)	0.807 (20.51)
	13	0.945 (24.00)	0.807 (20.51)
	14	1.024 (26.00)	0.729 (18.51)
	15	1.102 (28.00)	0.729 (18.51)
	16	1.181 (30.00)	0.650 (16.51)
	17	1.260 (32.00)	0.650 (16.51)
	18	1.339 (34.00)	0.571 (14.51)
	19	1.417 (36.00)	0.571 (14.51)
	20	1.496 (38.00)	0.492 (12.51)
	21	1.575 (40.00)	0.492 (12.51)
	22	1.654 (42.00)	0.414 (10.51)
	23	1.732 (44.00)	0.414 (10.51)
	24	1.811 (46.00)	0.335 (8.51)
	25	1.890 (48.00)	0.335 (8.51)
3.560 (90.42)	20	1.496 (38.00)	0.993 (25.22)
	21	1.575 (40.00)	0.993 (25.22)
	22	1.654 (42.00)	0.914 (23.22)
	23	1.732 (44.00)	0.914 (23.22)
	24	1.811 (46.00)	0.835 (21.22)
	25	1.890 (48.00)	0.835 (21.22)
	26	1.969 (50.00)	0.757 (19.22)
	27	2.047 (52.00)	0.757 (19.22)
	28	2.126 (54.00)	0.678 (17.22)
	29	2.205 (56.00)	0.678 (17.22)
	30	2.283 (58.00)	0.599 (15.22)
	31	2.362 (60.00)	0.599 (15.22)
	32	2.441 (62.00)	0.520 (13.22)
	33	2.520 (64.00)	0.520 (13.22)
	34	2.598 (66.00)	0.442 (11.22)
	35	2.677(68.00)	0.442 (11.22)
	36	2.756 (70.00)	0.363 (9.22)
	37	2.835(72.00)	0.363 (9.22)

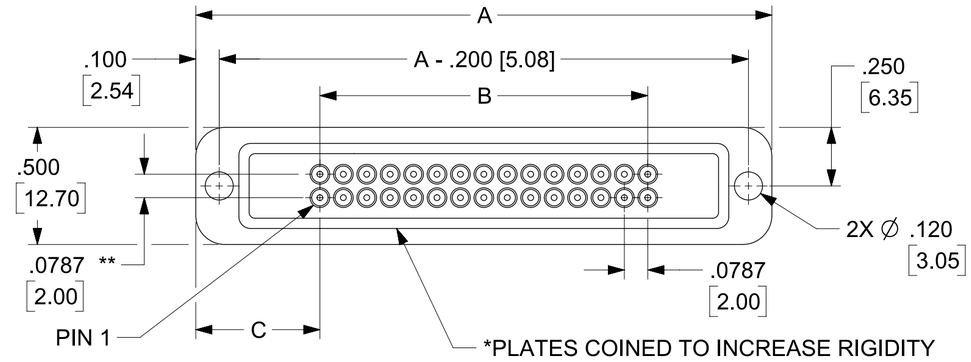

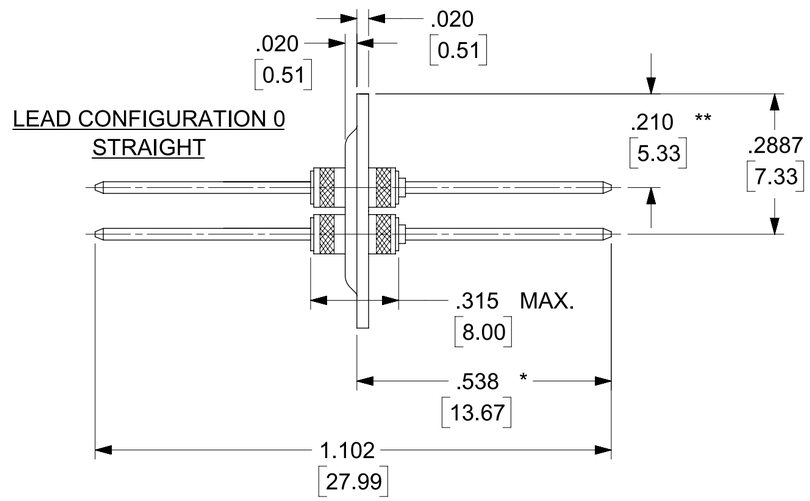

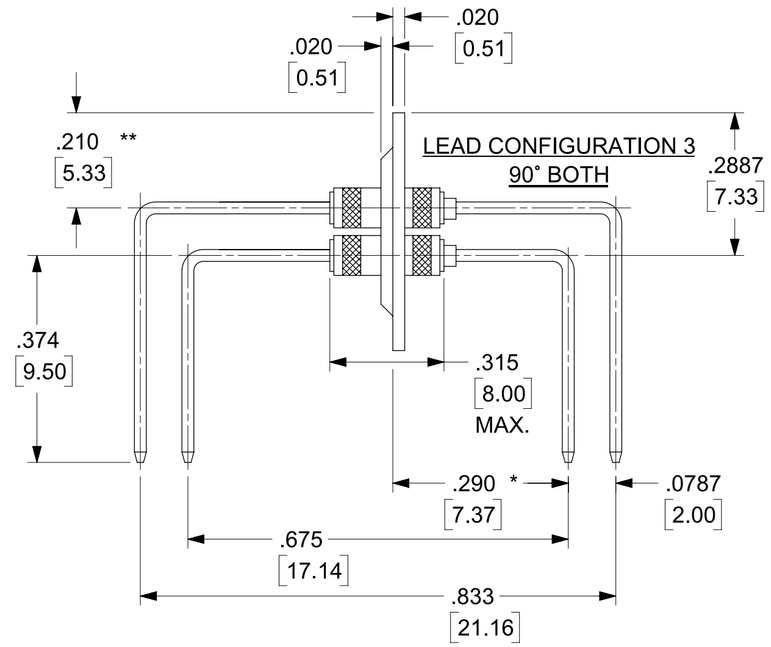

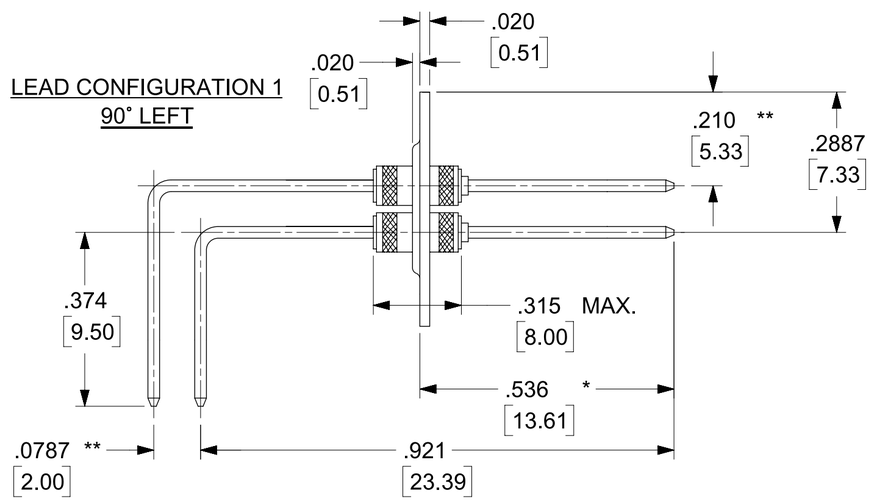

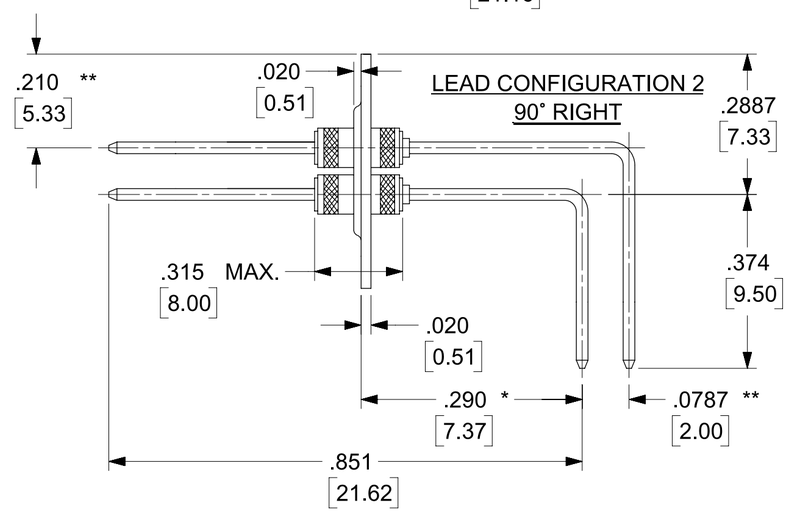

* 1.060 (26.92) AND 1.560 (39.62) LONG PLATES DO NOT HAVE COINING. INCREASE THESE DIMENSIONS BY .020 (0.51) IF USING THESE SIZED PLATES

** DIMENSION NOT APPLICAPIBLE FOR SINGLE ROW DESIGNS

FUNCTIONAL SYMBOLS: FA = 0, FC = 0, FP = 0

DIVISIONAL SYMBOLS

THIS DRAWING CONTAINS INFORMATION THAT IS PROPRIETARY TO MOLEX ELECTRONIC TECHNOLOGIES, LLC AND SHOULD NOT BE USED WITHOUT WRITTEN PERMISSION

DIMENSION UNITS	SCALE
INCH/mm	NTS

GENERAL TOLERANCES (UNLESS SPECIFIED)

	MM	INCH
4 PLACES	±	±
3 PLACES	±	±
2 PLACES	±	±
1 PLACE	±	±
0 PLACES	±	±
ANGULAR TOL	± 0.5°	

DRAFT WHERE APPLICABLE MUST REMAIN WITHIN DIMENSIONS

CURRENT REV DESC: RELEASED

STATUS: Production
DRWN: Kevin Tagan 2024-08-14
CHK'D: Les Meier 2024-08-19
APPR: James Borrelli 2024-08-19

THIRD ANGLE PROJECTION | DRAWING: C-SIZE | SERIES: 73287

molex

BOLT-IN FILTER PLATES

PRODUCT CUSTOMER DRAWING

DOCUMENT NUMBER	DOC TYPE	DOC PART	REVISION
732870010	PSD	000	A

MATERIAL NUMBER	CUSTOMER	SHEET NUMBER
SEE TABLE	GENERAL MARKET	3 OF 4

FORMAT: IN-TC-dbl-prod-C
REVISION: B
DATE: 2022/08/01

PART NUMBER TABLE

Filter Plate Density	Molex Part Number	Plate Length	ROWS	PINS PER ROW	Filter Circuit	Cap Value	Lead Config.	RoHS
Bolt-in High Density Filter Plate	0732860010	1.060 in (26.92mm)	1	4	C	1500pF	90° (both)	No
Bolt-in High Density Filter Plate	0732860020	1.060 in (26.92mm)	2	5	C	135pF	Straight	No
Bolt-in High Density Filter Plate	0732860030	1.060 in (26.92mm)	2	6	C	100pF	Straight	No
Bolt-in Std. Filter Plate	0732860040	1.060 in (26.92mm)	1	3	Pi	1000pF	90° (left)	Yes
Bolt-in Std. Filter Plate	0732860050	1.060 in (26.92mm)	1	5	C	100pF	Straight	No
Bolt-in Std. Filter Plate	0732860060	1.060 in (26.92mm)	1	5	Pi	1000pF	90° (both)	No
Bolt-in Std. Filter Plate	0732860070	1.060 in (26.92mm)	2	3	INS	10pF max.	Straight	No
Bolt-in Std. Filter Plate	0732860080	1.060 in (26.92mm)	2	3	Pi	5000pF	Straight	Yes
Bolt-in Std. Filter Plate	0732860090	1.060 in (26.92mm)	2	5	C	1000pF	90° (both)	No
Bolt-in Std. Filter Plate	0732860100	1.060 in (26.92mm)	2	5	C	1000pF	90° (left)	No
Bolt-in Std. Filter Plate	0732860110	1.060 in (26.92mm)	2	5	C	100pF	Straight	Yes
Bolt-in Std. Filter Plate	0732860120	1.060 in (26.92mm)	2	5	C	2500pF	90° (left)	No
Bolt-in Std. Filter Plate	0732860130	1.060 in (26.92mm)	2	5	C	4000pF	90° (right)	Yes
Bolt-in Std. Filter Plate	0732860140	1.060 in (26.92mm)	2	5	Pi	1000pF	Straight	No
Bolt-in Std. Filter Plate	0732860150	1.060 in (26.92mm)	2	5	Pi	1700pF	Straight	No
Bolt-in High Density Filter Plate	0732860160	1.560 in (39.62mm)	1	8	C	1500pF	Straight	No
Bolt-in High Density Filter Plate	0732860170	1.560 in (39.62mm)	2	10	C	135pF	Straight	No
Bolt-in High Density Filter Plate	0732860180	1.560 in (39.62mm)	2	10	C	2500pF	Straight	No
Bolt-in Std. Filter Plate	0732860190	1.560 in (39.62mm)	1	8	Pi	1700pF	Straight	Yes
Bolt-in Std. Filter Plate	0732860200	1.560 in (39.62mm)	1	8	Pi	2500pF	Straight	No
Bolt-in Std. Filter Plate	0732860210	1.560 in (39.62mm)	2	6	C	100pF	Straight	Yes
Bolt-in Std. Filter Plate	0732860220	1.560 in (39.62mm)	2	6	Pi	5000pF	Straight	No
Bolt-in Std. Filter Plate	0732860230	1.560 in (39.62mm)	2	7	C	100pF	Straight	Yes
Bolt-in Std. Filter Plate	0732860240	1.560 in (39.62mm)	2	8	C	1000pF	90° (left)	No
Bolt-in Std. Filter Plate	0732860250	1.560 in (39.62mm)	2	8	Pi	5000pF	Straight	No
Bolt-in Std. Filter Plate	0732860260	1.560 in (39.62mm)	2	9	C	100pF	Straight	Yes
Bolt-in Std. Filter Plate	0732860270	1.560 in (39.62mm)	2	10	C	1000pF	90° (left)	No
Bolt-in Std. Filter Plate	0732860280	1.560 in (39.62mm)	2	10	C	1000pF	Straight	No
Bolt-in Std. Filter Plate	0732860290	1.560 in (39.62mm)	2	10	C	100pF	Straight	No
Bolt-in Std. Filter Plate	0732860300	1.560 in (39.62mm)	2	10	Pi	1000pF	90° (right)	No
Bolt-in Std. Filter Plate	0732860310	1.560 in (39.62mm)	2	10	Pi	1700pF	Straight	No
Bolt-in Std. Filter Plate	0732860320	1.560 in (39.62mm)	2	10	Pi	5000pF	Straight	Yes
Bolt-in High Density Filter Plate	0732860330	2.560 in (65.02mm)	2	25	C	1000pF	Straight	No
Bolt-in Std. Filter Plate	0732860340	2.560 in (65.02mm)	2	12	C	100pF	Straight	Yes
Bolt-in Std. Filter Plate	0732860350	2.560 in (65.02mm)	2	15	C	100pF	Straight	No
Bolt-in Std. Filter Plate	0732860360	2.560 in (65.02mm)	2	15	Pi	5000pF	90° (both)	No
Bolt-in Std. Filter Plate	0732860370	2.560 in (65.02mm)	2	16	C	1000pF	90° (left)	No
Bolt-in Std. Filter Plate	0732860380	2.560 in (65.02mm)	2	18	C	1000pF	Straight	No
Bolt-in Std. Filter Plate	0732860390	2.560 in (65.02mm)	2	20	C	68pF	Straight	No
Bolt-in Std. Filter Plate	0732860400	2.560 in (65.02mm)	2	20	Pi	100pF	90° (left)	No
Bolt-in Std. Filter Plate	0732860410	2.560 in (65.02mm)	2	20	Pi	100pF	Straight	No
Bolt-in Std. Filter Plate	0732860420	2.560 in (65.02mm)	2	20	Pi	1700pF	90° (left)	No
Bolt-in Std. Filter Plate	0732860430	3.560 (90.42mm)	2	25	Pi	1000pF	Straight	No
Bolt-in Std. Filter Plate	0732860440	3.560 (90.42mm)	2	25	Pi	2500pF	Straight	No

FUNCTIONAL SYMBOLS
FA = 0
FC = 0
FP = 0
DIVISIONAL SYMBOLS

THIS DRAWING CONTAINS INFORMATION THAT IS PROPRIETARY TO MOLEX ELECTRONIC TECHNOLOGIES, LLC AND SHOULD NOT BE USED WITHOUT WRITTEN PERMISSION

DIMENSION UNITS: INCH/mm
SCALE: NTS

GENERAL TOLERANCES (UNLESS SPECIFIED)

	MM	INCH
4 PLACES	±	±
3 PLACES	±	±
2 PLACES	±	±
1 PLACE	±	±
0 PLACES	±	±
ANGULAR TOL	± 0.5°	

DRAFT WHERE APPLICABLE MUST REMAIN WITHIN DIMENSIONS

CURRENT REV DESC: RELEASED

STATUS: Production
DRWN: Kevin Tagan 2024-08-14
CHK'D: Les Meier 2024-08-19
APPR: James Borrelli 2024-08-19

THIRD ANGLE PROJECTION | DRAWING: C-SIZE | SERIES: 73287

molex

BOLT-IN FILTER PLATES

PRODUCT CUSTOMER DRAWING

DOCUMENT NUMBER	DOC TYPE	DOC PART	REVISION
732870010	PSD	000	A

MATERIAL NUMBER	CUSTOMER	SHEET NUMBER
SEE TABLE	GENERAL MARKET	4 OF 4

FORMAT: 9in-TC-ib-prod-C
REVISION: B
DATE: 2022/08/01