© 2024 TE Connectivity. All Rights Reserved.

REVISIONS					
P	LTR	DESCRIPTION	DATE	DWN	APVD
	1	INITIAL RELEASE	12JAN2024	SP	PS
	A	PRODUCTION RELEASE	02AUG2024	KGN	PS

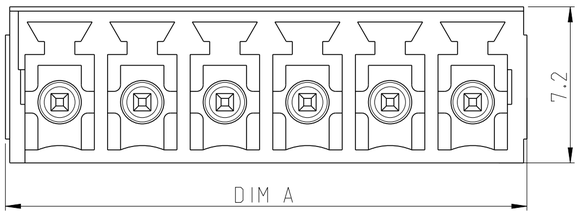

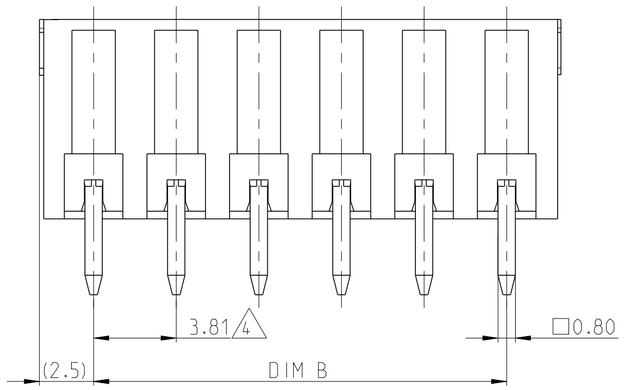

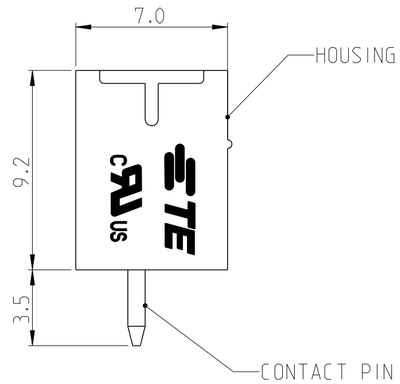

NOTES:

1. MATERIALS AND FINISH
   HOUSING : PA 66 UL94-V0, COLOR GREEN.
   CONTACT PIN : COPPER ALLOY ,TIN PLATED OVER NICKEL UNDER PLATE.

2. ELECTRICAL:
   RATED VOLTAGE : 300V
   RATED CURRENT : 8A
   INSULATION RESISTANCE : >1000 MΩ (500V DC)

3. OPERATING TEMPERATURE RANGE : -40°C TO +115°C.

4. NOT CUMULATIVE TOLERANCE

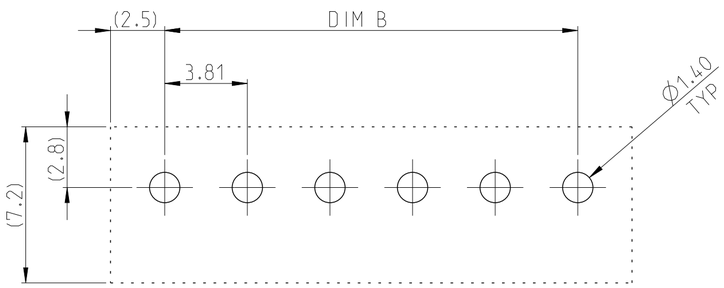

PCB LAYOUT

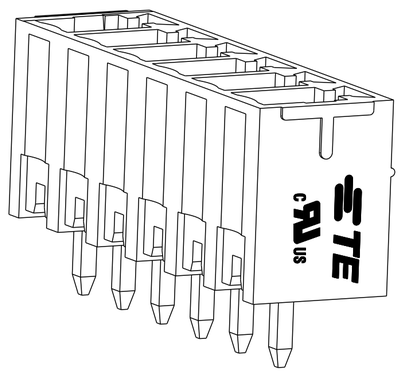

2842502-6 AS SHOWN

TOLERANCE FOR DIM B	DIM B	TOLERANCE FOR DIM A	DIM A	NO OF POS(P)	PART NUMBER
±0.25	87.63	±0.40	92.63	24	2-2842502-4
	72.39	±0.30	77.39	20	2-2842502-0
±0.20	57.15		62.15	16	1-2842502-6
	49.53	±0.25	54.53	14	1-2842502-4
	41.91		46.91	12	1-2842502-2
	38.10		43.10	11	1-2842502-1
	34.29		39.29	10	1-2842502-0
	30.48		35.48	9	2842502-9
±0.15	26.67		31.67	8	2842502-8
	22.86	±0.20	27.86	7	2842502-7
	19.05		24.05	6	2842502-6
	15.24		20.24	5	2842502-5
	11.43		16.43	4	2842502-4
	07.62		12.62	3	2842502-3
	03.81		08.81	2	2842502-2

THIS DRAWING IS A CONTROLLED DOCUMENT.

DIMENSIONS: mm

TOLERANCES UNLESS OTHERWISE SPECIFIED:
0 PLC ±0.5
1 PLC ±0.3
2 PLC ±0.1
3 PLC ±
4 PLC ±
ANGLES ±1°

MATERIAL 1

FINISH 1

DWN SEEMA P 12JAN2024
CHK PRASHANTH S 12JAN2024
APVD PRASHANTH S 12JAN2024

PRODUCT SPEC 108-161183
APPLICATION SPEC 114-160803
WEIGHT -

TE Connectivity

NAME TERMINAL BLOCK, HEADER VERTICAL,SR, 3.81mm PITCH, GREEN

SIZE	CAGE CODE	DRAWING NO	RESTRICTED TO
A2	00779	C-2842502	-

CUSTOMER DRAWING | SCALE 5:1 | SHEET 1 OF 1 | REV A