© 2024 TE Connectivity. All Rights Reserved.

REVISIONS					
P	LTR	DESCRIPTION	DATE	DWN	APVD
	A	INITIAL RELEASE	13NOV2024	KW	PS

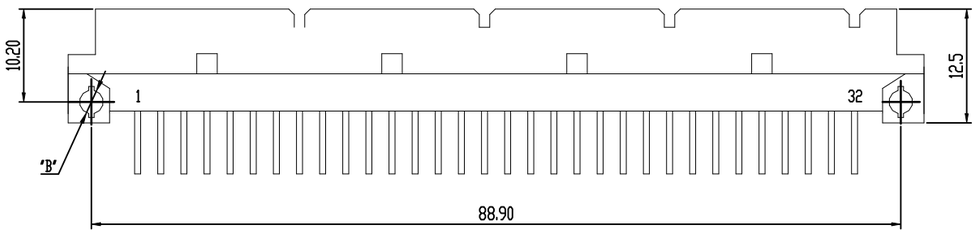

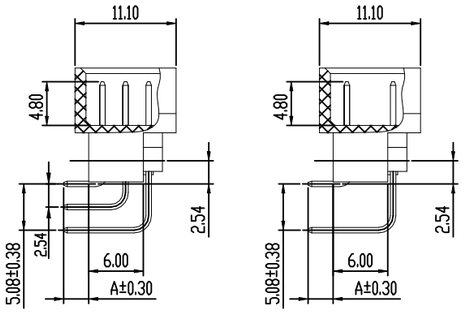

THREE ROWS TAIL
2489383-1
2489383-2

TWO ROWS TAIL
2489383-3
2489383-7

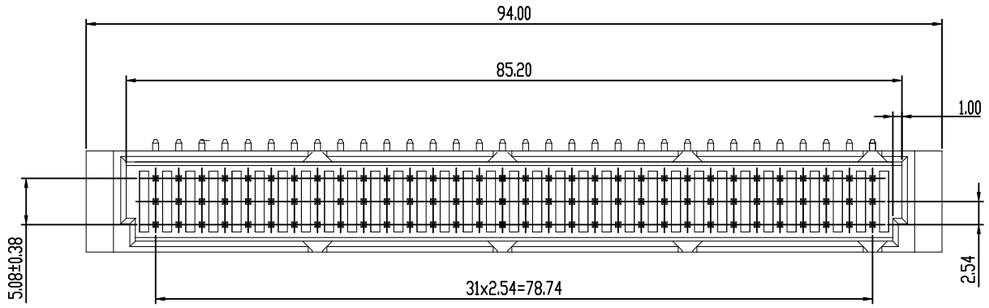

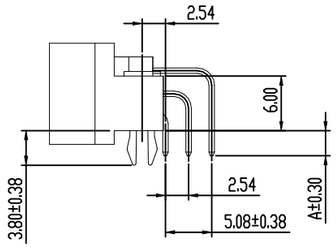

2489383-6

PERFORMANCE CHARACTERISTICS:
1. MAIN BODY PART MATERIAL
   INSULATOR: PBT GREY UL94V-0
   CONTACT TERMINAL: COPPER ALLOY, 1.27µm Ni UNDER PLATED, OUTER PLATING SEE TABLE
2. ELECTRICAL REQUIREMENTS:
   CURRENT RATING: 1.5 A (At 20°C)
   CONTACT RESISTANCE: ≤20 mΩ
   INSULATION RESISTANCE: ≥10^4mΩ
3. ENVIRONMENT SPECIFICATION
   WORKING TEMPERATURE: −55°C~+125°C
4. APPLICABLE STANDARD: DIN41612
5. PACKING & STORING
   METHOD OF PACKING: BOX, INNER BOX, OUTER BOX
   STORING CONDITION: TEMPERATURE OF −10°C~+40°C BELOW 80% RELATIVE HUMIDITY
6. STYLE OF INSTALLATION: SOLDER PCB INSTALLATION(THT)
7. TO PREVENT THE POLLUTION OF THE ENVIRONMENT PRODUCT INFO RoHS AGREEMENT: IN LINE WITH THE EROPEAN UNION RoHS.

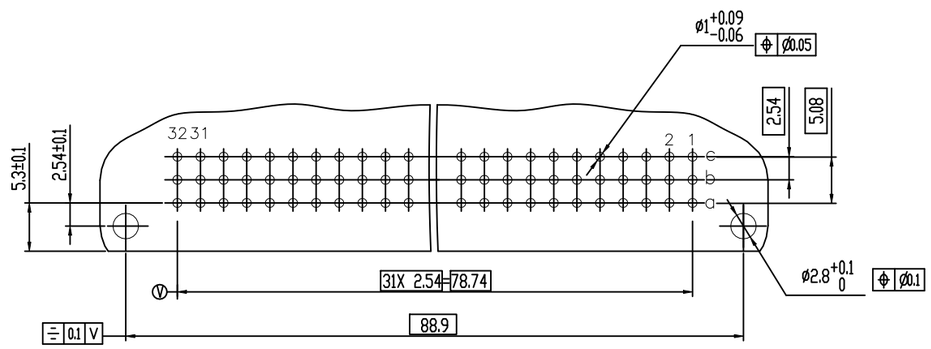

RECOMMENDED PCB LAYOUT

Pos	PART NO.	A	B	CONTACT / PLATING MATERIAL	TAIL	INSULATOR MATERIAL AND COLOR
64	2489383-7	3.00	ø2.5 MIN.	Au 0.38µm or PdNi 0.38µm+GOLD FLASH	Sn	PBT GREY UL94V-0
96	2489383-6			Au 0.38µm or PdNi 0.38µm+GOLD FLASH		PBT GREY UL94V-0 WITH 3.80mm CLIP
64	2489383-3			Au 0.38µm or PdNi 0.38µm+GOLD FLASH		PBT GREY UL94V-0
96	2489383-2			Au 0.38µm or PdNi 0.38µm+GOLD FLASH		PBT GREY UL94V-0
96	2489383-1			Au 0.38µm or PdNi 0.38µm+GOLD FLASH		PBT GREY UL94V-0

THIS DRAWING IS A CONTROLLED DOCUMENT.

DIMENSIONS: mm

TOLERANCES UNLESS OTHERWISE SPECIFIED:
0 PLC ± 0.50
1 PLC ± 0.38
2 PLC ± 0.25
3 PLC ± –
4 PLC ± –
ANGLES ± 3°

MATERIAL: SEE TABLE

FINISH: –

DWN	KISHAN W	30AUG2024
CHK	PRAVEEN V	06SEP2023
APVD	SATHISH PS	06SEP2023
PRODUCT SPEC	—	
APPLICATION SPEC	—	
WEIGHT	—	

TE Connectivity

NAME: DIN41612 CONN.C TYPE MALE/RIGHT ANGLE
—

SIZE	CAGE CODE	DRAWING NO	RESTRICTED TO
A3	00779	C-2489383	—

CUSTOMER DRAWING

SCALE	SHEET	REV
NTS	1 OF 1	A

1470-19 (1/15)