© – TE Connectivity. All Rights Reserved.

REVISIONS					
P	LTR	DESCRIPTION	DATE	DWN	APVD
	A	GTP PER ECN-25-321152	13MAY2025	ED	WZ

MATERIALS AND PLATING		UNIT: MICRO-INCHES
PART NAME	MATERIAL	PLATING
BODY/SHELL	BRASS	ALBALOY 80u"
CONTACT PIN	BRASS	GOLD 5u"/COPPER 50u"
INSULATOR	PTFE	N/A
FERRULE	BRASS	ALBALOY 80u"
GASKET	SILICONE(RED)	N/A
RETAINER RING	SUS304	PASSIVATED

ELECTRICAL CHARACTERISTICS		
IMPEDANCE		50 Ω
VOLTAGE RATING		330 V(rms)
FREQUENCY RANGE		DC-6 GHz
DIELECTRIC WITHSTANDING VOLTAGE		>2500 V
CONTACT RESISTANCE	CENTER CONTACT	<1.5 mΩ
	OUTER CONTACT	<1mΩ
INSULATION RESISTANCE		>5000 MΩ
INSERTION LOSS		N/A
VSWR		<1.3(DC-6GHz)
3RD INTERMODULATION		N/A

MECHANICAL CHARACTERISTICS	
DURABILITY	> 500 cycles

ENVIRONMENTAL PARAMETER	
TEMPERATURE RANGE	−65 ℃~+165 ℃
WATERPROOF	N/A
THERMAL SHOCK	MIL- STD 202, Meth. 107,Cond. B
VIBRATION	MIL- STD 202, Meth. 204,Cond. D
SHOCK	MIL- STD 202, Meth. 213,Cond. I
CORROSION	MIL- STD 202, Meth. 101,Cond. B

NOTES:
1 ALL DIMENSIONS ARE NOMINAL FOR REFERENCE ONLY UNLESS OTHERWISE STATED;
2 CRIMPED CONTACT PIN:HEX. SIZE .118". CRIMPED FERRULE:HEX. SIZE .429";
3 BAG PACKAGING;
4 RoHS: COMPLIANT.

1. CRIMPED FERRULE HEX. CRIMP SIZE .429"
2. CRIMPED CONTACT PIN HEX. CRIMP SIZE .118" OR SOLDER

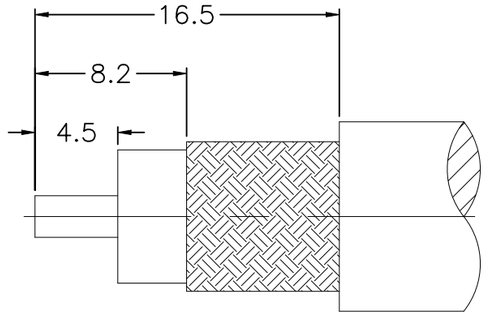

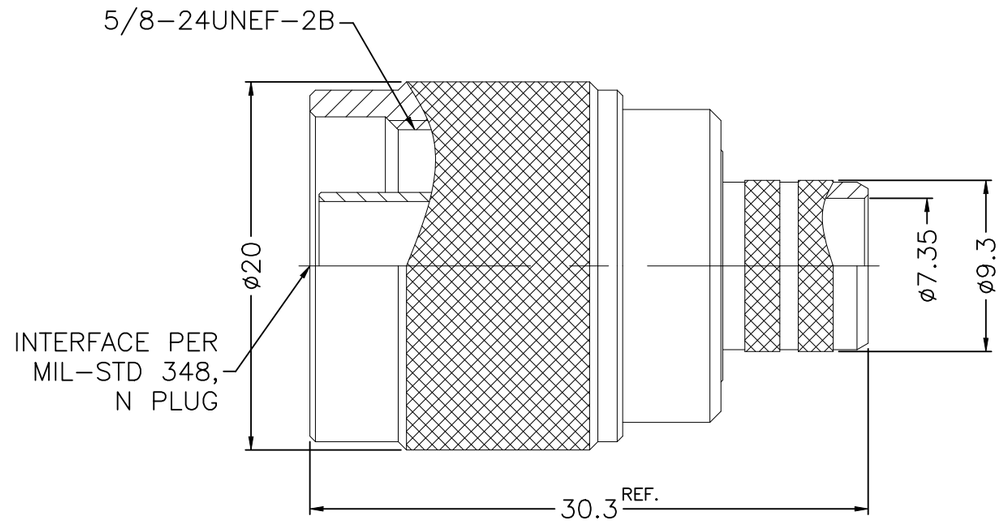

RECOMMENDED CABLE STRIPPING DIM'S

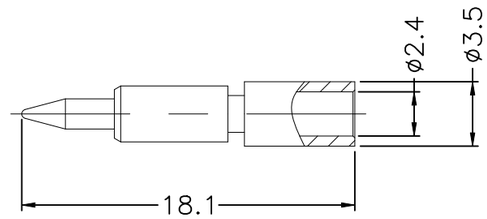

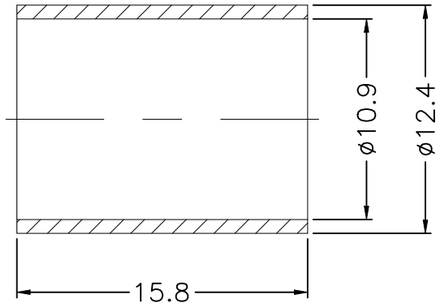

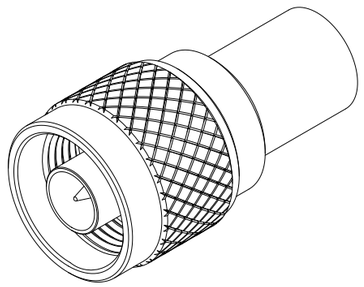

–	2504641-1
MARK	PART NUMBER

THIS DRAWING IS A CONTROLLED DOCUMENT.

DIMENSIONS: mm

TOLERANCES UNLESS OTHERWISE SPECIFIED:
0 PLC ± 0.3
1 PLC ± 0.3
2 PLC ± 0.2
3 PLC ± 0.1
4 PLC ± –
ANGLES ± 5°

MATERIAL –
FINISH –

DWN	ED	18MAR2025
CHK	TP	18MAR2025
APVD	WH	18MAR2025
PRODUCT SPEC	—	
APPLICATION SPEC	—	
WEIGHT	—	

TE Connectivity

NAME: N Plug Str Crimp RG-213 – –

SIZE	CAGE CODE	DRAWING NO	RESTRICTED TO
A3	00779	C-2504641	—

CUSTOMER DRAWING | SCALE 1:1 | SHEET 1 OF 1 | REV A