ITEM	MOLEX P/N	DESCRIPTION	QTY	UOM
A,B	5051510200	2.0W/B REC HSG 2CKT	2	PC
C	5051520200	2.0W/B RETAINER 2ckt	2	PC
D	5054878000	2.0W/B CRIMP TERM AU PLATING	4	PC
PL	-	PAPER PRINTED PAPER WHITE (S100X150YAJ)	1	PC

FROM	TO	WIRE SIZE	WIRE TYPE	COLOR
A-1	B-1	0.22 SQMM	ENDURA	BLACK
A-2	B-2	0.22 SQMM	ENDURA	BLACK

TABLE 1		
LABEL ID	LABEL CONTENT	REMARK
PL	MOLEX PN MOLEX BATCH WK/YR	LABEL TEXT MUST BE 2MM MAX IN HEIGHT WITH ARIAL FONT AND WRAPPED IN FLAG TYPE ON A SINGLE WIRE.

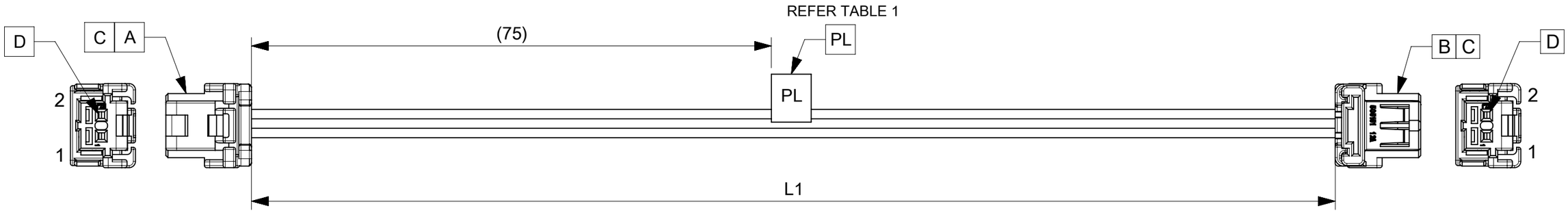

TABLE		
FG PART #	L1	TITLE
2284252022	150±5	Dura-Clik TPA R-R 2Ckt 150MM disc Au
2284252024	500±5	Dura-Clik TPA R-R 2Ckt 500MM disc Au

NOTE:
1. CONNECTOR VIEW/CIRCUIT NOS SHOWN FROM THE MATING SIDE OF THE CONNECTOR, CONNECTOR VIEW IS SHOWN ONLY FOR REFERENCE. .
2. THE PRODUCT HAS TO MEET PERFORMANCE SPECIFICATION AS PER ES-36586-004.

TESTING REQUIREMENT		
TEST NAME/COMPONENT NAME	TEST PARAMETER	REQUIREMENT
Continuity/Short/Open	AS PER PIN OUT TABLE	100%

REVISION	CHANGE NOTE	EC NO	DATE
A1	FG DESCRIPTION UPDATED	ER	18/02/2025
A	INITIAL RELEASE	804956	21/11/2024

REVISION HISTORY

THIS DRAWING CONTAINS INFORMATION THAT IS PROPRIETARY TO MOLEX ELECTRONIC TECHNOLOGIES, LLC AND SHOULD NOT BE USED WITHOUT WRITTEN PERMISSION

FUNCTIONAL SYMBOLS: FA = 0, FC = 0, FD = 0
DIVISIONAL SYMBOLS

DIMENSION UNITS	SCALE
mm	NTS

GENERAL TOLERANCES (UNLESS SPECIFIED)

ANGULAR TOL	± °
4 PLACES	±
3 PLACES	±
2 PLACES	±
1 PLACE	±
0 PLACES	±

DRAFT WHERE APPLICABLE MUST REMAIN WITHIN DIMENSIONS

CURRENT REV DESC:

EC NO: 813242
DRWN: BHARAB5 2025/02/18
CHK'D: NAVEEB6 2025/02/19
APPR: RPAI01 2025/02/25

INITIAL REVISION:
DRWN: CHIDAG1 2024/10/11
APPR: RPAI01 2024/11/22

THIRD ANGLE PROJECTION | DRAWING: A3-SIZE | SERIES: 228425

molex

SEE TABLE

PRODUCT CUSTOMER DRAWING

DOCUMENT NUMBER	DOC TYPE	DOC PART	REVISION
2284252022	PSD	000	A1

MATERIAL NUMBER	CUSTOMER	SHEET NUMBER
SEE TABLE	GENERAL MARKET	1 OF 1

DOCUMENT STATUS	P1	RELEASE DATE	2025/02/25 19:42:00

FORMAT: master-Sized-A3
REVISION: J1
DATE: 2021/05/05