ITEM	MOLEX P/N	DESCRIPTION	QTY	UOM
A,B	2064610600	Micro-Fit Plus Rcpt Hsg 2X3	2	PC
C	2064620300	Micro-Fit Plus TPA 2X3	4	PC
D	2064600031	Micro-Fit Plus FemCrpTer 18AWG Tin Lu	12	PC
PL	-	PART ID LABEL	1	PC

FROM	TO	WIRE SIZE	WIRE TYPE	COLOR
A-1	B-1	18 AWG	UL 1061	BLACK
A-2	B-2	18 AWG	UL 1061	BLACK
A-3	B-3	18 AWG	UL 1061	BLACK
A-4	B-4	18 AWG	UL 1061	BLACK
A-5	B-5	18 AWG	UL 1061	BLACK
A-6	B-6	18 AWG	UL 1061	BLACK

TABLE 1

LABEL ID	LABEL CONTENT	REMARK
PL	MOLEX PN MOLEX BATCH WK/YR	LABEL TEXT MUST BE 2MM MAX IN HEIGHT WITH ARIAL FONT AND WRAPPED IN FLAG TYPE ON A SINGLE WIRE.

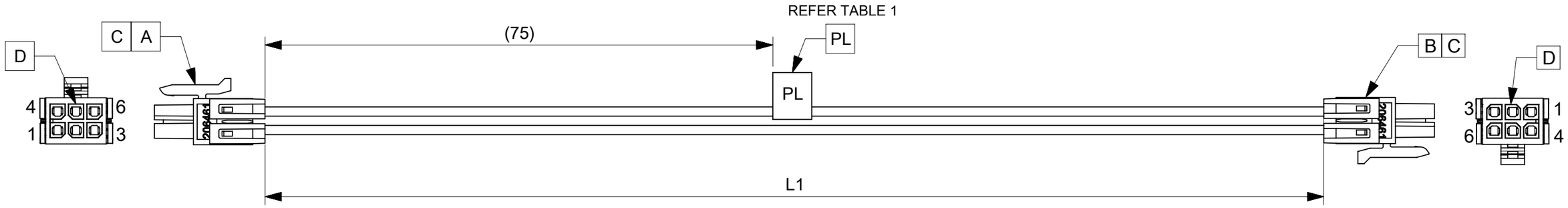

TABLE

FG PART #	L1	TITLE
2284101062	150±5	Micro-Fit Plus R-R 6Ckt 150mmdisc Sn
2284101064	500±5	Micro-Fit Plus R-R 6Ckt 500mmdisc Sn

NOTE:
1. CONNECTOR VIEW/CIRCUIT NOS SHOWN FROM THE MATING SIDE OF THE CONNECTOR, CONNECTOR VIEW IS SHOWN ONLY FOR REFERENCE. .
2. THE PRODUCT HAS TO MEET PERFORMANCE SPECIFICATION AS PER ES-36586-004.

TESTING REQUIREMENT

TEST NAME/COMPONENT NAME	TEST PARAMETER	REQUIREMENT
Continuity/Short/Open	AS PER PIN OUT TABLE	100%

REVISION	CHANGE NOTE	EC NO	DATE
A	INITIAL RELEASE	804816	20/11/2024

REVISION HISTORY

THIS DRAWING CONTAINS INFORMATION THAT IS PROPRIETARY TO MOLEX ELECTRONIC TECHNOLOGIES, LLC AND SHOULD NOT BE USED WITHOUT WRITTEN PERMISSION

FUNCTIONAL SYMBOLS: FA = 0, FC = 0, FD = 0

DIVISIONAL SYMBOLS

DIMENSION UNITS: mm
SCALE: NTS

GENERAL TOLERANCES (UNLESS SPECIFIED)

ANGULAR TOL	± °
4 PLACES	±
3 PLACES	±
2 PLACES	±
1 PLACE	±
0 PLACES	±

DRAFT WHERE APPLICABLE MUST REMAIN WITHIN DIMENSIONS

CURRENT REV DESC:

EC NO: 804816
DRWN: CHIDAG1 2024/10/01
CHK'D: NAVEEB6 2024/11/20
APPR: RPAI01 2024/11/21

INITIAL REVISION:
DRWN: CHIDAG1 2024/10/01
APPR: RPAI01 2024/11/21

THIRD ANGLE PROJECTION | DRAWING: A3-SIZE | SERIES: 228410

molex

SEE TABLE

PRODUCT CUSTOMER DRAWING

DOCUMENT NUMBER	DOC TYPE	DOC PART	REVISION
2284101062	PSD	000	A

MATERIAL NUMBER	CUSTOMER	SHEET NUMBER
SEE TABLE	GENERAL MARKET	1 OF 1

DOCUMENT STATUS	P1	RELEASE DATE	2024/11/21 05:44:07

FORMAT: master-Sized-A3
REVISION: J1
DATE: 2021/05/05