DWG NO.	SH	REV
C–NDAAFF–0099	1	AD

TABLE 1	
AHSP P/N	LENGTH "A"
NDAAFF–0001	1000 mm ±20 mm
NDAAFF–0002	2000 mm ±40 mm
NDAAFF–0003	3000 mm ±60 mm
NDAAFF–0004	500 mm ±20 mm
NDAAFF–0005	4000 mm ±80 mm
NDAAFF–0006	1500 mm ±40 mm
NDAAFF–0007	2500 mm ±60 mm
NDAAFF–0008	350 mm ±20 mm
NDAAFF–0009	2200 mm ±60 mm
NDAAFF–0010	600 mm ± 20 mm
NDAAFF–0011	750 mm ± 20 mm
NDAAFF–0012	3500 mm ±80 mm
NDAAFF–0013	400 mm ±20 mm

REVISIONS

ZONE	REV.	ECN NUMBER	DESCRIPTION	BY	DATE	APPROVED
	AB	RGA0–22020201	ADDED –0013 TO TABLE 1.	N.ZENG	03/01/2022	BK
	AC	JLOZ–22040101	CHANGED QSFP BACK TO GEN1 DESIGN.	N.ZENG	04/26/2022	J.LOPEZ
	AD	JLOZ–22043001	C DRAWING REVISION MATCHES TO P DRAWING REVISION.	D.DAI	05/06/2022	J.LOPEZ

NOTE: ONLY THREE MOST RECENT RELEASED REVISIONS DISPLAYED

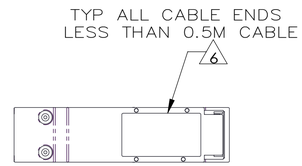

FAR SIDE OF DIECAST

TYP ALL CABLE ENDS

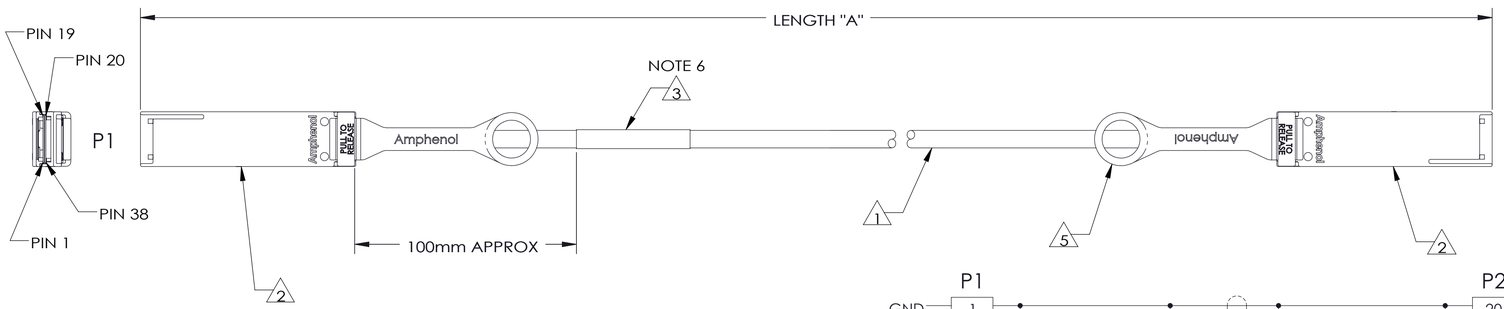

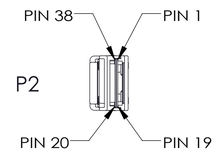

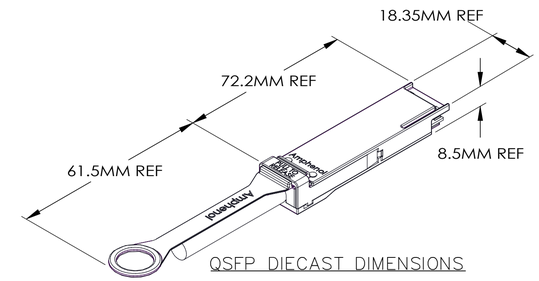

QSFP DIECAST DIMENSIONS

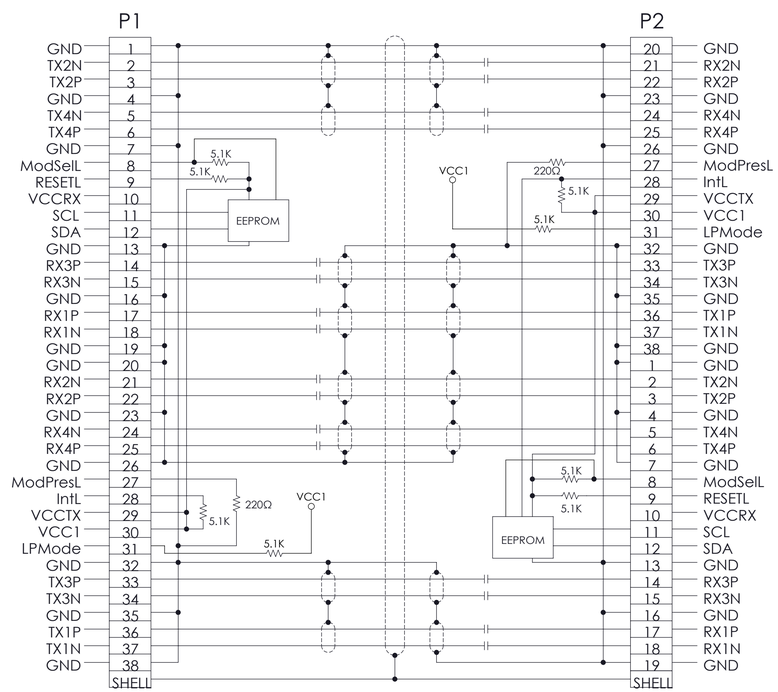

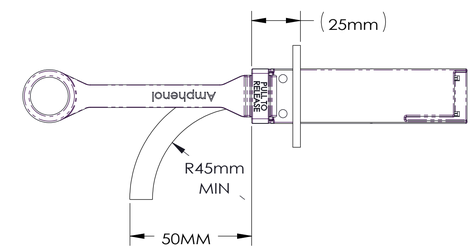

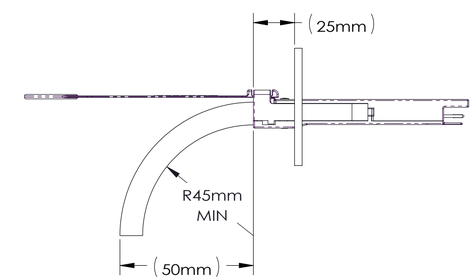

RADIUS FROM END OF DIECAST

TABLE 2	
ITEM No.	DESCRIPTION
1	30 AWG, 8–PR, PVC BLACK, UL AWM STYLE 20276, 80°C, VW1
2	PLUG, QSFP+, REFERENCE SFF–8661
3	LABEL, WRAPPED – AHSP P/N, REV, DATE CODE, LENGTH, CoO & SERIAL NUMBER CE AND WEEE LOGO
5	LANYARD – PANTONE 347C (GREEN)
6	LABEL, CONNECTOR – AHSP P/N, REV, DATE CODE LENGTH, CoO & SERIAL NUMBER

10. UL LABEL MUST BE ON THE SHIPPING CARTON PER SUBJECT 764 OF THE UL COMPONENT WIRING HARNESS (ZPFW2) FILE #E86140. CSA LABEL MUST BE ON SHIPPING CARTON.
9. PACKAGE COMPLETED ASSY IN AN APPROPRIATELY SIZED ESD BAG.
8. EPROM CONTENT SHALL BE COMPLIANT WITH SFF–8636 SPECIFICATIONS FOR 100GBASE–CR4. EPROM REVISION IS EQUAL TO AHSP PART NUMBER REVISION.
7. DELETED.
6. ONE LABEL PLACED ON P1 END.
5. CABLE ASSEMBLIES MUST MEET SHIELDING EFFECTIVENESS REQUIREMENTS OF 35dB FROM 1–10GHz AND 30dB FROM 10–18GHz.
4. DELETED.
3. COMPLIANT TO EU DIRECTIVE 2011/65/EU – RoHS2.
2. ASSEMBLIES SHALL BE COMPLIANT TO 100GBASE–CR4 SPECIFICATION (EXCEPT NDAAFF–0005).
1. THIS DRAWING IS RESERVED FOR AMPHENOL STANDARD PRODUCT.

NOTES: UNLESS OTHERWISE SPECIFIED

NOTE: DC BLOCKING CAP VALUE IS 0.1 μF
EPROM CONNECTED TO VCCTX

Amphenol RoHS 2011/65/EU

TOLERANCES	
0.0	± 0.25
0.00	± 0.08
0.000	± –
ANGLES	± 1.0°

UNLESS OTHERWISE SPECIFIED DIMENSIONS ARE IN MM

DWN	03/18/2014	DC
CHK	03/18/2014	DD
APVD	03/18/2014	EM

Amphenol AHSP

A Division of Amphenol Corporation

200 Innovative Way, Suite 201, Nashua, N.H. 03062 (603) 879–3000

TITLE: CABLE ASSEMBLY, QSFP/QSFP, PSV, 100Ω, 100 GbE, 30 AWG EXD

INTERPRET PER ASME Y14.5

CODE IDENT 31413

CUSTOMER USE DRAWING

PART NO.	REV.
SEE TABLE 1	N/A
DRAWING NO. C–NDAAFF–0099	REV. AD

SIZE D | SCALE 1:1 | SHEET 1 OF 1

DWG. NO. C–NDAAFF–0099 | SH. 1 | REV. AD

AHSP_szD_mm.drwdot Rev01/201409