DWG NO.	SH	REV
C–NDAAFJ–0099	1	N

TABLE 1	
AHSP P/N	LENGTH "A"
NDAAFJ–0001	1000 MM ±20 MM
NDAAFJ–0002	3000 MM ±60 MM
NDAAFJ–0003	4000 MM ±80 MM
NDAAFJ–0004	5000 MM ±100 MM
NDAAFJ–0005	2000 MM ±40 MM
NDAAFJ–0006	800 MM ±20 MM
NDAAFJ–0007	2500 MM ±60 MM
NDAAFJ–0008	2160 MM ±50 MM

REVISIONS						
ZONE	REV.	ECN NUMBER	DESCRIPTION	BY	DATE	APPROVED
	L	DDYR–21100402	CHANGED QSFP FROM GEN1 TO GEN2 DESIGN.	N.ZENG	10/21/2021	MARK.H
	M	DDYR–22020301	ADDED –0008 TO TABLE 1.	N.ZENG	03/01/2022	BK
	N	DDYR–22082501	CHANGED FROM GEN2 TO GEN1 DESIGN.	HCL–SH	09/13/2022	D.DYER

NOTE: ONLY THREE MOST RECENT RELEASED REVISIONS DISPLAYED

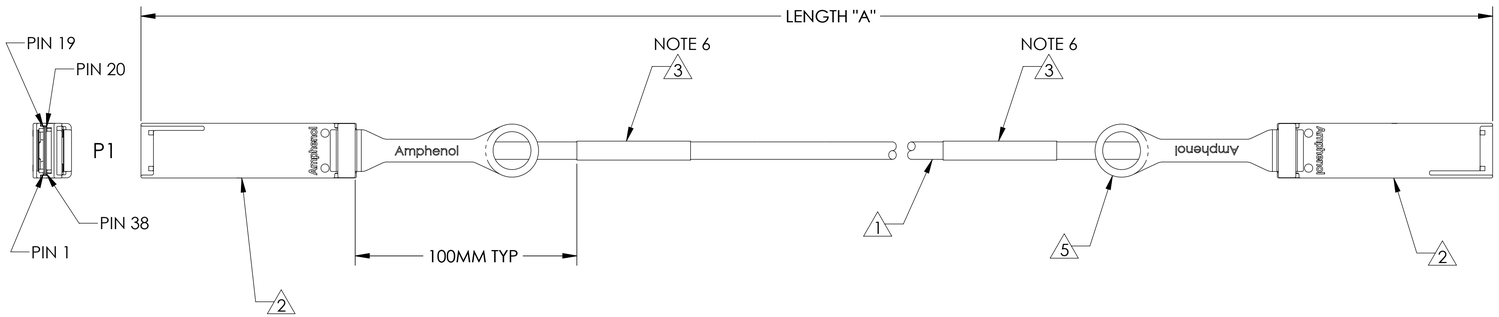

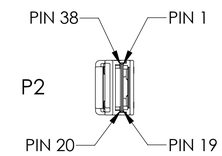

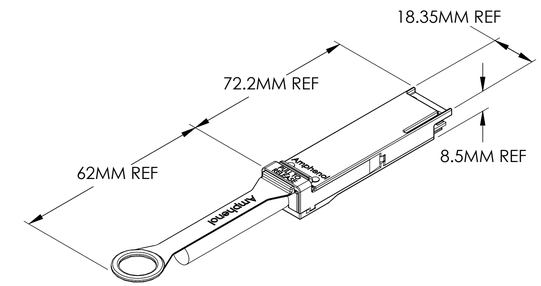

QSFP DIECAST DIMENSIONS

TABLE 2	
ITEM No.	DESCRIPTION
1	26 AWG, 8–PR, PVC BLACK, UL 75°C CL2
2	PLUG, QSFP+, REFERENCE SFF–8661
3	LABEL, WRAPPED – AHSP P/N, REV, DATE CODE, LENGTH, CoO & SERIAL NUMBER
5	LANYARD – PANTONE 347C (GREEN)
6	EPROM – REFERENCE SFF–8636, PAGE A0 ONLY

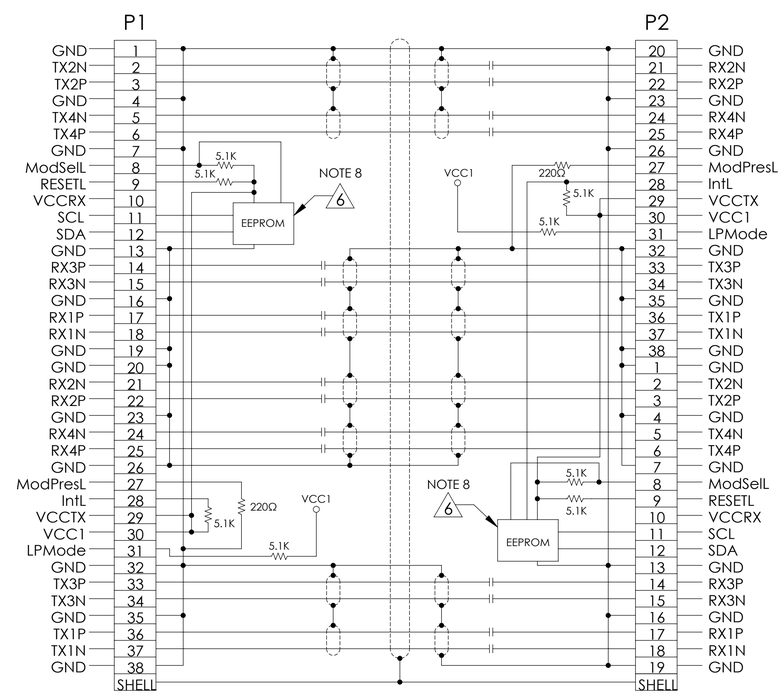

NOTE: DC BLOCKING CAP VALUE IS 0.1μ
FEPROM CONNECTED TO VCCTX

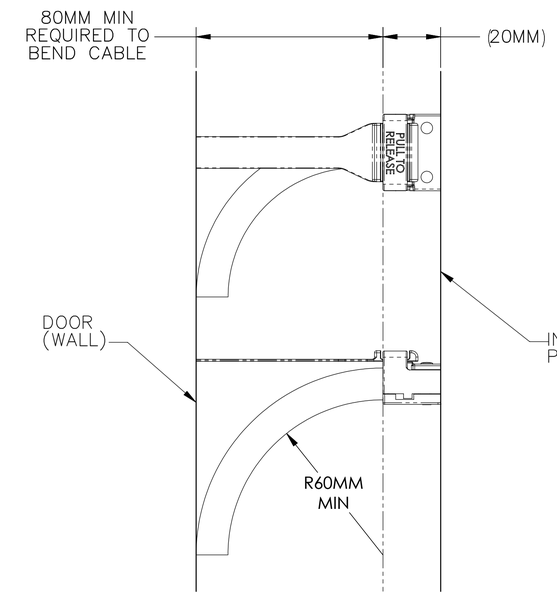

RADIUS FROM EDGE OF DIECAST

10. UL LABEL MUST BE ON THE SHIPPING CARTON PER SUBJECT 764 OF THE UL COMPONENT WIRING HARNESS (ZPFW2) FILE #E86140. CSA LABEL MUST BE ON SHIPPING CARTON.
9. PACKAGE COMPLETED ASSY IN AN APPROPRIATELY SIZED ESD BAG.
8. EPROM CONTENT SHALL BE COMPLIANT WITH SFF–8636 SPECIFICATIONS FOR 100G BASE–CR4. EPROM REVISION IS EQUAL TO AHSP PART NUMBER REVISION.
7. DELETED.
6. ASSEMBLIES LESS THAN ONE METER REQUIRE ONLY ONE LABEL PLACED ON P1 END.
5. CABLE ASSEMBLIES MUST MEET SHIELDING EFFECTIVENESS REQUIREMENTS OF 35dB FROM 1–10GHz AND 30dB FROM 10–18GHz.
4. DELETED.
3. COMPLIANT TO EU DIRECTIVE 2011/65/EU – RoHS2.
2. ASSEMBLIES SHALL BE COMPLIANT TO 100GBASE–CR4 SPECIFICATION.
1. THIS DRAWING IS RESERVED FOR AMPHENOL STANDARD PRODUCT.

NOTES: UNLESS OTHERWISE SPECIFIED

Amphenol RoHS 2011/65/EU

TOLERANCES	
0.0	± 0.25
0.00	± 0.08
0.000	± –
ANGLES	± 1.0°

UNLESS OTHERWISE SPECIFIED DIMENSIONS ARE IN MM

DWN	06/03/2014 DC
CHK	06/03/2014 DD
APVD	06/03/2014 EM

Amphenol AHSP

A Division of Amphenol Corporation
200 Innovative Way, Suite 201, Nashua, N.H. 03062 (603) 879–3000

TITLE: CABLE ASSEMBLY, QSFP/QSFP, PSV, 100Ω, 100 GbE, 26 AWG EXD

INTERPRET PER ASME Y14.5

CODE IDENT 31413

CUSTOMER USE DRAWING

PART NO.	REV
SEE TABLE 1	N/A
DRAWING NO. C–NDAAFJ–0099	REV N

SIZE D | SCALE 1:1 | SHEET 1 OF 1

DWG NO. C–NDAAFJ–0099 | SH 1 | REV N

AHSP_szD_mm.drwdot Rev01/201409