© – TE Connectivity. All Rights Reserved.

REVISIONS					
P	LTR	DESCRIPTION	DATE	DWN	APVD
	A1	ECN-25-319731;G-Plated 50 TO 30 C-PIN	02MAY2025	TP	WK

NOTES:

PACK ACCORDANCE WITH TE SPEC 107-3275;

ALL DIMENSIONS ARE NOMINAL FOR REFERENCE ONLY UNLESS OTHERWISE STATED;

RoHS: COMPLIANT.

SPECIFICATIONS:

IMPEDANCE: 50Ω

FREQUENCY: DC to 18GHz

VSWR: DC-18 GHz 1.4 min.
RETURN LOSS: DC-18 GHz 15.56 dB min

INSERTION LOSS: 0.9 dB max

CONTACT RESISTANCE:
CENTER: 12 milliohms.
OUTER: 4 milliohms.

DIELECTRIC WITHSTANDING VOLTAGE: >1000 VRMS

INSULATION RESISTANCE: >5000mΩ

MECHANICAL CHARACTERISTICS

ENGAGEMENT AND DISENGAGEMENT FORCE
ENGAGEMENT: 0.23 N.m max.
DISENGAGEMENT: 0.23 N.m max.

CONTACT RETENTION: 26.7 N min.

ENVIRONMENTAL PARAMETER

TEMPERATURE RANGE: -65°C TO +165°C
LEAK TEST: 1X10-8 atm.cc/sec
WEATHERPROOF: 30 psi max.

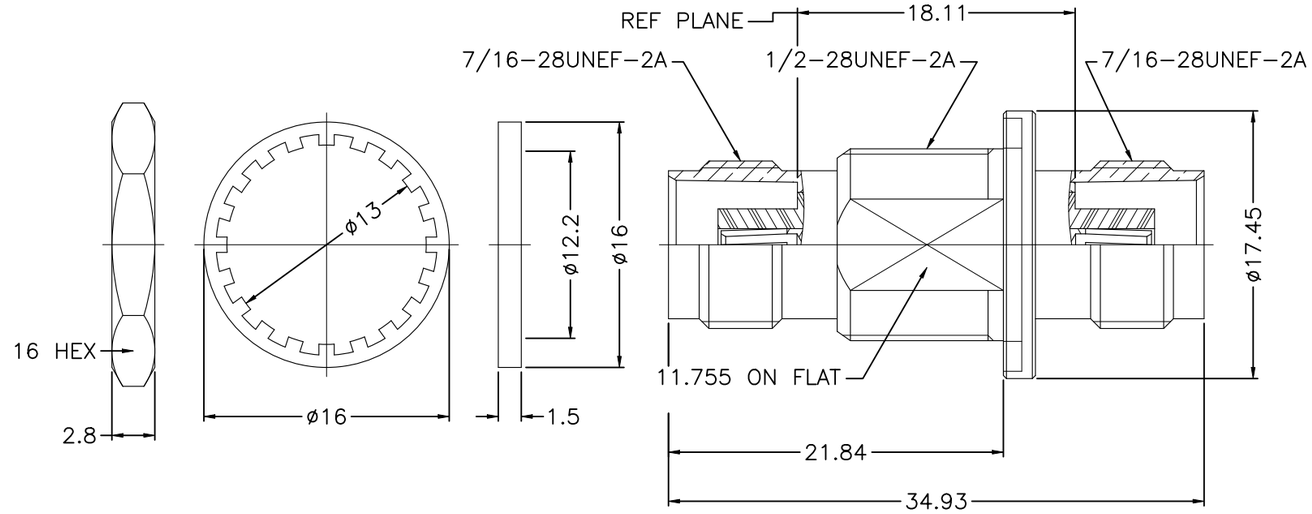

NOTES:
FINISH (PLATING THICKNESS IN MICRO-INCHES)

1 100 MICROINCHES MIN ELECTROLESS NICEKL PLATED.
2 100 MICROINCHES MIN GOLD PLATED,
100 MICROINCHES MIN OVER ELECTROLESS NICKEL UNDERPLATED.
3 30 MICROINCHES MIN GOLD PLATED,
100 MICROINCHES MIN OVER ELECTROLESS NICKEL UNDERPLATED.

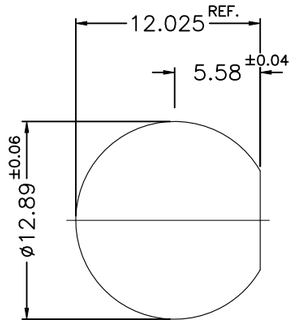

PANEL THICKNESS=4.19 ±2.79 mm

RECOMMENDED MOUNTING HOLE

	1	NOTE 1	BRASS	HEX NUT	7
	1	NOTE 1	BRASS	LOCK WASHER	6
	1	RED	SILICONE RUBBER	GASKET	5
	1	NOTE 3	BERYLLIUM-COP	CONTACT PIN	4
	1	NUTURAL	PTFE	INSULATOR	3
	1	NOTE 1	BRASS	INNER BODY	2
	1	NOTE 2	KOVAR (IRON-NICKEL-COBALT)	SUB-ASSEMBLY	1
	1	NOTE 2	KOVAR (IRON-NICKEL-COBALT)		
	1	GREEN	GLASS(Neg BH-14G/K)		
	1	NOTE 1	BRASS		
	2503386-1	FINISH/PLATING	MATERIAL	DESCRIPTION	ITEM
QUANTITY PER ASSY		PARTS LIST			

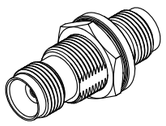

THIS DRAWING IS A CONTROLLED DOCUMENT.

DIMENSIONS: mm

TOLERANCES UNLESS OTHERWISE SPECIFIED:
0 PLC ± 0.3
1 PLC ± 0.2
2 PLC ± 0.1
3 PLC ± 0.05
4 PLC ± –
ANGLES ± 5

MATERIAL: SEE TABLE

FINISH: –

DWN	TP	06FEB2025
CHK	TP	06FEB2025
APVD	WK	06FEB2025
PRODUCT SPEC	—	
APPLICATION SPEC	—	
WEIGHT	21.05 g	

TE Connectivity

NAME: TNC JACK TO JACK STR BHD HERMETIC SEAL
–
–

SIZE	CAGE CODE	DRAWING NO	RESTRICTED TO
A3	00779	C-2503386	—

CUSTOMER DRAWING

SCALE	SHEET	REV
1:1	1 OF 1	A1