PART NUMBER	X	TOLERANCE
515-1049-0400F	.400"[10,16]	±.010"
515-1049-0500F	.500"[12,17]	±.010"
515-1049-0600F	.600"[15,24]	±.010"
515-1049-0700F	.700"[17,78]	±.010"
515-1049-0800F	.800"[20,32]	±.010"
515-1049-0900F	.900"[22,86]	±.010"
515-1049-1000F	1.000"[25,4]	±.010"
515-1049-1200F	1.200"[30,48]	±.015"
515-1049-1500F	1.500"[38,1]	±.015"
515-1049-2000F	2.000"[50,8]	±.015"
515-1049-2500F	2.500"[63,5]	±.015"
515-1049-3000F	3.000"[76,2]	±.015"
515-1049-3500F	3.500"[88,9]	±.015"
515-1049-4000F	4.000"[101,6]	±.015"

RoHS COMPLIANT 515-1049-XXXXF

Part Numbers with the "F" suffix ending are RoHS Compliant. Packaging is marked with "RoHS Compliant" label or equivalent markings.

REV	ECN NO	REVISIONS	DRN	CKD	APP	QA	CM	DATE
A	133069	NEW RELEASE	LD	CS				8-19-25

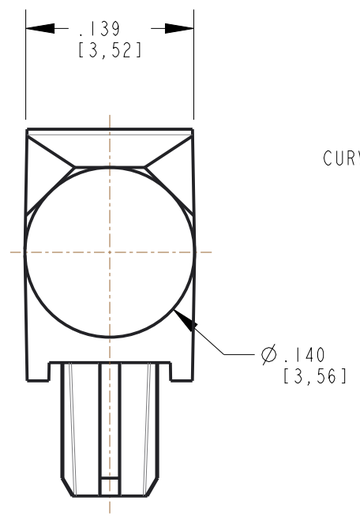

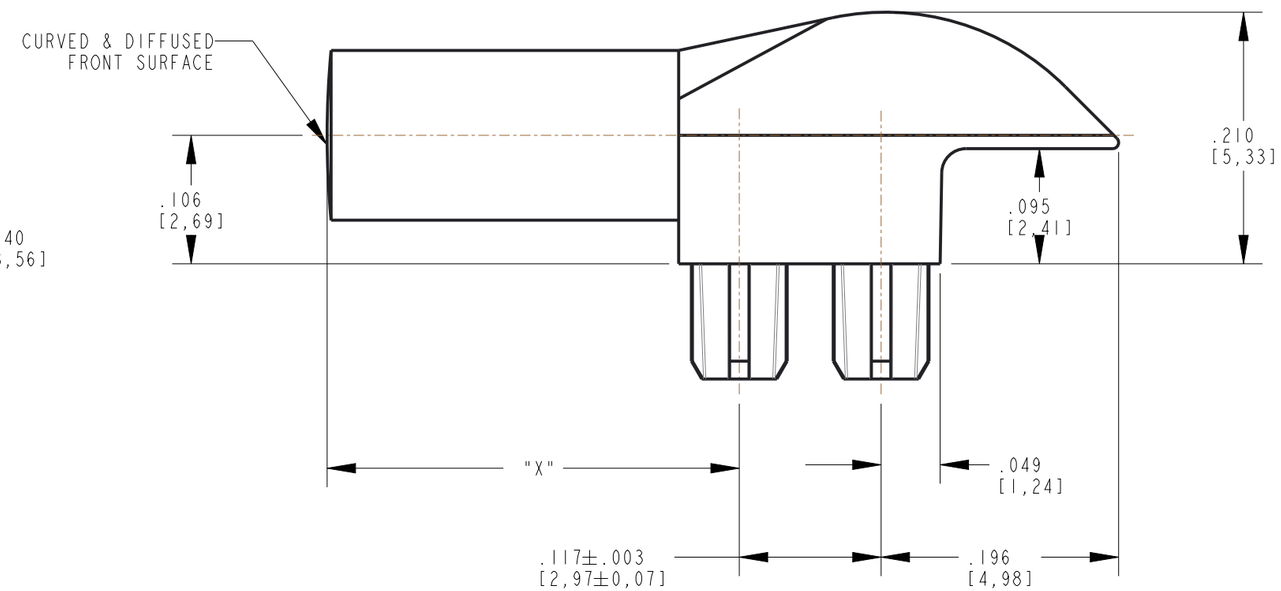

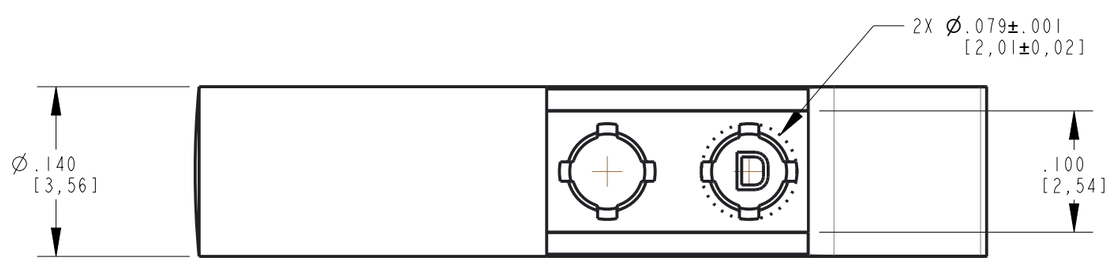

SOLDER PAD/HOLES LAYOUT

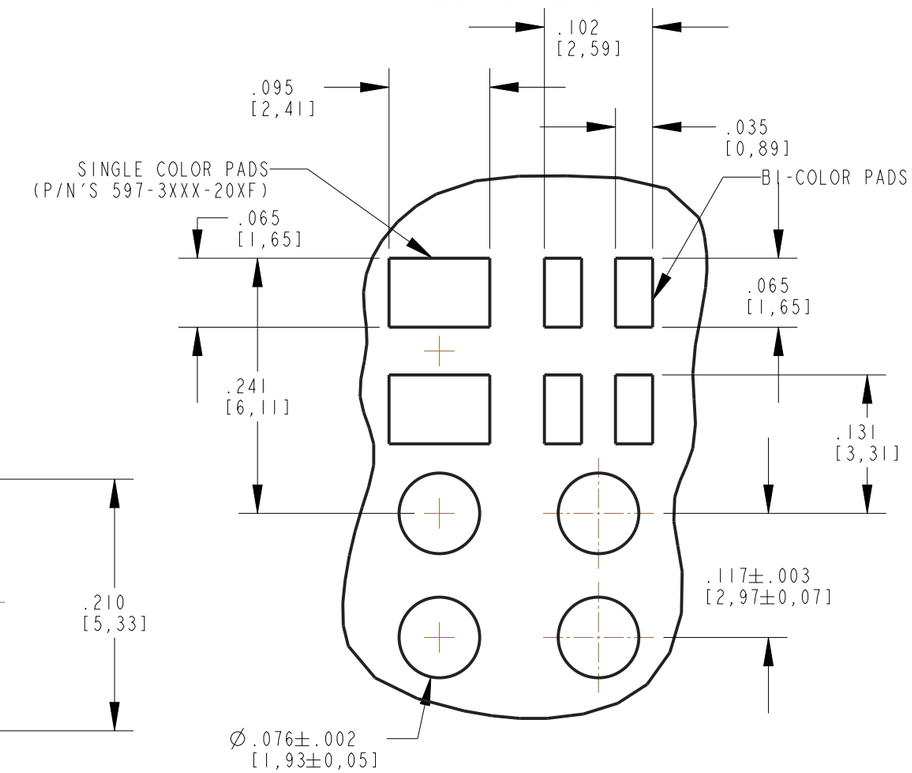

NOTES:

1. COMPONENTS TO BE MOLDED IN A CLEAR TRANSMISSIVE POLYCARBONATE (UL 94V-0 FLAMMABILITY).
2. COMPONENTS DESIGNED TO BE PRESSED INTO P.C. BOARD.
3. OPERATING/STORAGE TEMPERATURE: -30°C TO +100°C
4. RECOMMENDED LIGHT SOURCES: SINGLE OR BI-COLOR SMT LEDS (DIALIGHT P/N'S: 597-3XXX-20XF, 597-77X1-20XF)
5. DIALIGHT PART NUMBER: 515-1049-XXXXF

THIS DRAWING AND THE CONTENTS HEREIN ARE CONFIDENTIAL AND THE SOLE PROPERTY OF DIALIGHT CORP. REPRODUCTION OF THIS DRAWING OR CONSTRUCTION OF ANY PARTS WITHIN THIS DRAWING ARE FORBIDDEN WITHOUT THE WRITTEN CONSENT OF DIALIGHT CORP.

DIALIGHT CORP INTERNAL REFERENCE ONLY = 3D MODEL : 5151049XXXXF-A.11

SCALE: 8.000

ALL DIM's: INCH (mm)

TOLERANCES:
UNLESS OTHERWISE SPECIFIED
FRACTIONS: ±1/64
DECIMALS (.XX): ±.01
DECIMALS (.XXX): ±.005
DECIMALS (.XXXX): ±.0005
ANGLES: ±1°

FINISH

FSCM 83330

DRAWING NUMBER: C-18813

REV: A

TITLE: VARIABLE LIGHT PIPE

MATERIAL

Dialight
1501 ROUTE 34 SOUTH
FARMINGDALE, NJ 07727
(732) 919-3119
www.dialight.com

SHEET 1 OF 1

FAMILY TABLE: