DRAWING MADE IN THIRD ANGLE PROJECTION

THIS DRAWING IS UNPUBLISHED. RELEASED FOR PUBLICATION .19 .

© COPYRIGHT 19 BY AMP INCORPORATED. ALL INTERNATIONAL RIGHTS RESERVED.

PROD CODE	LOC	DIST	P	F
S064	DF	DO		

REVISIONS

ZONE	LTR	DESCRIPTION	DATE	APPD
	N	REV & REDWN PER DF-3808	BR	

WHEN ORDERING CONTACT ON TAPE, ORDER BY THE TAPE NUMBER PLUS THE PACKAGEING CODE AS FOLLOWS:

2. FOR USE WITH AMP TAPETRONIC, PNEUMATIC TOOL-
   A. 1000 PARTS TO A BOX ADD PACKAGING CODE: 1MBOX
3. FOR USE WITH 4/8 INDENT STRIPPER CRIMPER-
   A. 1000 PARTS TO A REEL ADD PACKAGING CODE: 1MREEL
   B. 5000 PARTS TO A REEL ADD PACKAGING CODE: 5MREEL

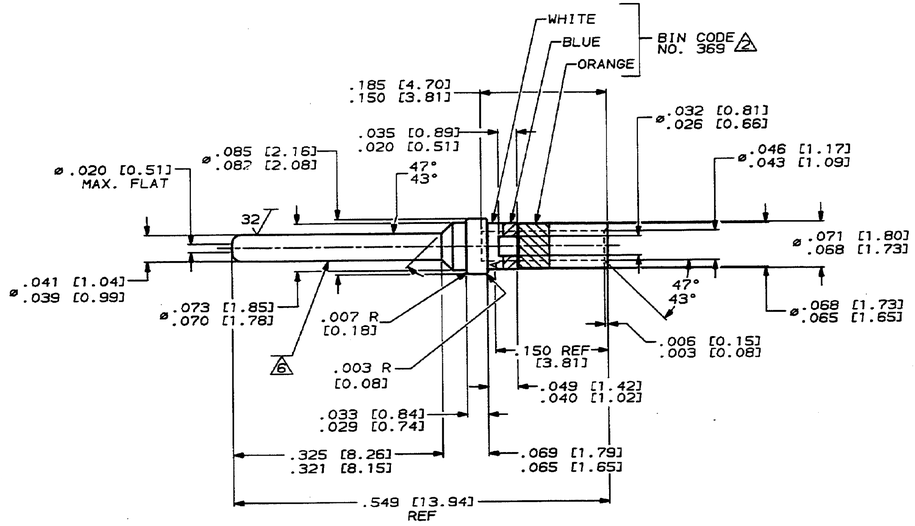

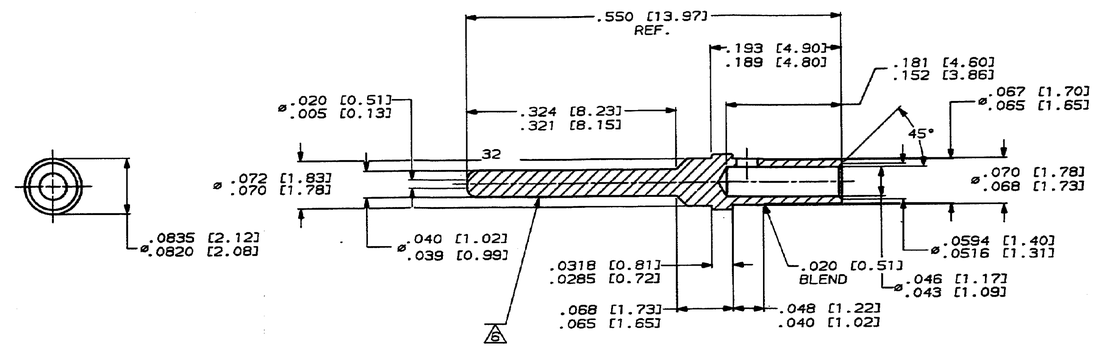

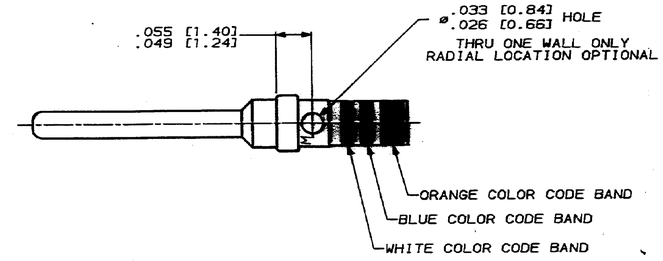

ALTERNATE CONFIGURATION

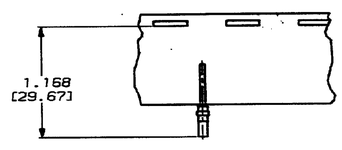

1. ALL DIMENSIONS APPLY AFTER PLATING.
2. THIS DRAWING COMPLIES WITH SPECIFICATION MIL-C-39029/64 & M24308/11-1.
3. ALL DIAMETERS CONCENTRIC WITH EACH OTHER WITHIN .004 T.I.R.
4. PIN MATES WITH SOCKET 205090 (MIL-C-39029/63).
5. ALL SURFACES HAVE 63 OR BETTER FINISH, UNLESS SHOWN.
6. POINT OF PLATING MEASUREMENT .188 [4.78] FROM TIP OF PIN.
7. PLATING: GOLD PER MIL-G-45204 (TYPE II) OVER NICKEL PER QQ-N-290. QQ-N-290.
8. PLATING: GOLD PER MIL-G-45204 (TYPE II) OVER COPPER PER MIL-C-14550, CLASS 4.

DESCRIPTION	PLATING	PART NO.
WITHOUT COLOR CODE	(8)	205089-4
CONTACTS ON TAPE	SAME AS -1	205089-2
AS SHOWN	(7)	205089-1

DO NOT SCALE PRINT.
UNLESS SPECIFIED
DIMENSIONS IN mm [INCHES]
TOLERANCES ON :
2 PLC DEC ± -
3 PLC DEC ± -
ANGLES ± -

MATERIAL: COPPER ALLOY NO. 187

FINISH: --

DR 10-11-90 R. RINEHART
CHK 10-15-90
APPD 10-15-90
APPD 10-15-90
PRODUCT SPEC -
APPLICATION SPEC -
WEIGHT -

AMP Incorporated
Harrisburg, PA 17105-3608

NAME: PIN-SIZE #20 CONTACT, AMPLIMITE

SIZE D | CAGE CODE 00779 | DRAWING NO 205089

SCALE 10:1 | SHEET 1 OF 1

CUSTOMER DRAWING