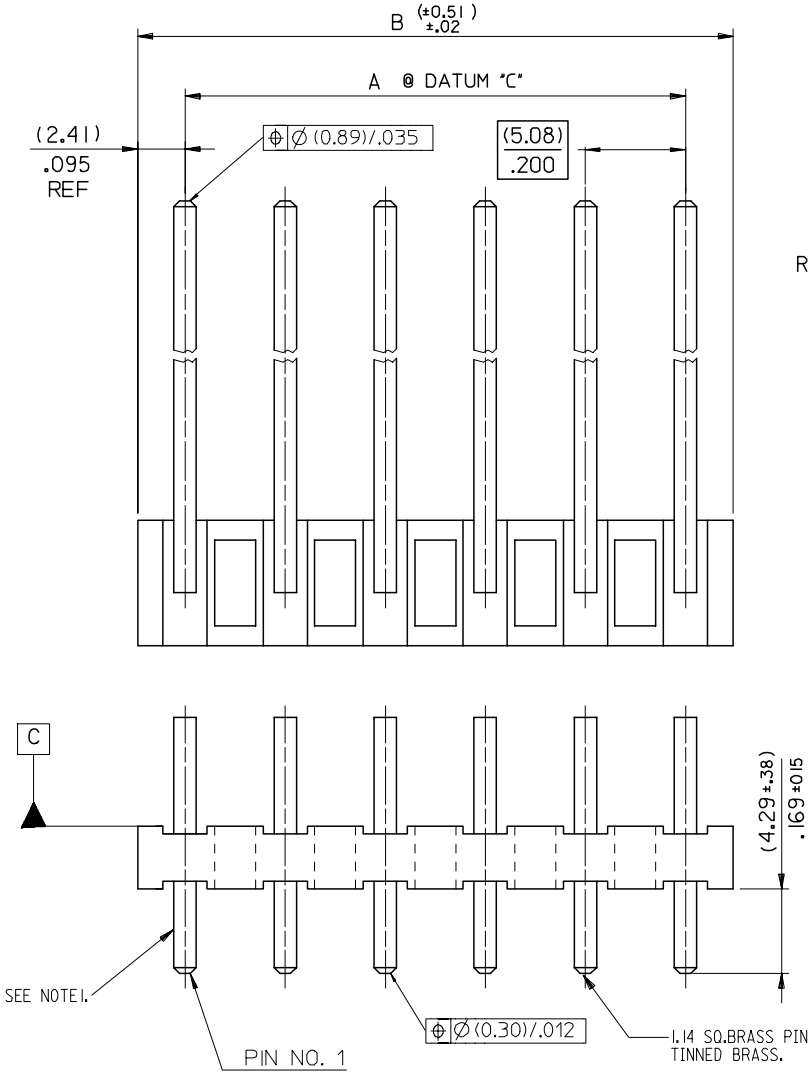


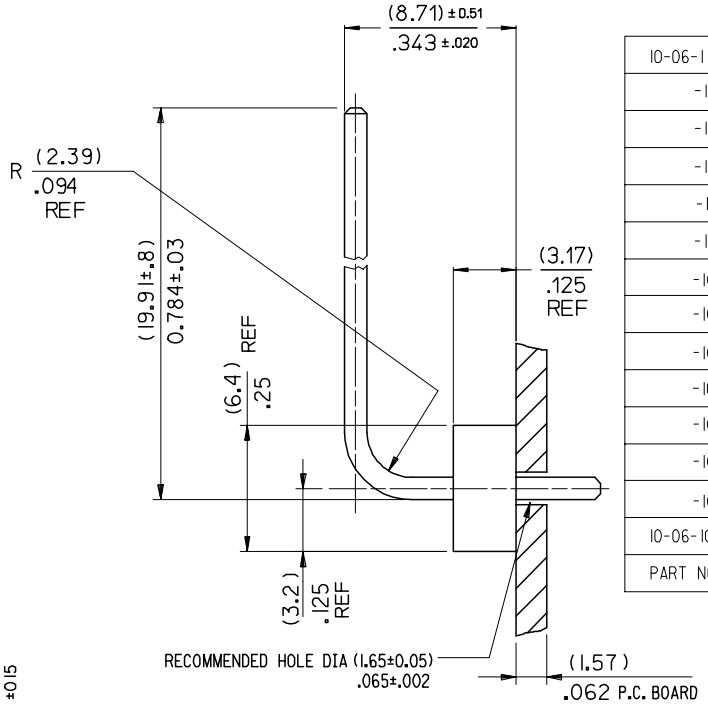


| PART NO. | ENG NO. | NO. CKTS | DIM "A" | DIM "B" |
|---|---|---|---|---|
| 10-06-1155 | E-3061-15B | 15 | (71.12) 2.800 | (75.96) 2.990 |
| -1145 | -14B | 14 | (66.04) 2.600 | (70.87) 2.790 |
| -1135 | -13B | 13 | (60.96) 2.400 | (65.79) 2.590 |
| -1125 | -12B | 12 | (55.88) 2.200 | (60.71) 2.390 |
| -1115 | -11B | 11 | (50.80) 2.000 | (55.63) 2.190 |
| -1105 | -10B | 10 | (45.72) 1.800 | (50.55) 1.990 |
| -1095 | - 9B | 9 | (40.64) 1.600 | (45.47) 1.790 |
| -1085 | - 8B | 8 | (35.56) 1.400 | (40.39) 1.590 |
| -1075 | - 7B | 7 | (30.48) 1.200 | (35.31) 1.390 |
| -1065 | - 6B | 6 | (25.40) 1.000 | (30.23) 1.190 |
| -1055 | - 5B | 5 | (20.32) 0.800 | (25.15) 0.990 |
| -1045 | - 4B | 4 | (15.24) 0.600 | (20.07) 0.790 |
| -1035 | - 3B | 3 | (10.16) 0.400 | (14.99) 0.590 |
| 10-06-1025 | E-3061-2B | 2 | (5.08) 0.200 | (9.91) 0.390 |

WAFERS WITH VOIDS:

| PART NO. | ENG. NO. | NO. OF CKTS | VOID CKT. LOCATION | DIM "A" | DIM "B" |
|---|---|---|---|---|---|
| 10-06-1046 | E-3061-4B-51 | 4 | 2 , 3 | (15.24) 0.600 | (20.07) 0.790 |

3061-NB-51

BASE NO:
NO. OF CKTS:
VERSION:
VOID CODE:

NOTES:

1. PIN PUSH OUT FORCE: 1.36 KG MIN.
2. PIN MUST CONFORM TO MOLEX SOLDERABILITY SPEC. NO. 152 AFTER PLATING.
3. THIS PART CONFORMS TO PROD. SPEC. 99020-0087

WAFER MAT'L: NYLON 6/6, 94V-2

MOD DIMS & TOLS
EC NO: E2007-0996
DRWN: JDENNEHY 2007/06/13
CHKD: DMORIARTY 2007/06/13
APPR: JDENNEHY 2007/06/22
DESCRIPTION
REV

QUALITY SYMBOLS
▼=0
(C)=0

GENERAL TOLERANCES (UNLESS SPECIFIED)

| | mm | INCH |
|---|---|---|
| 4 PLACES | ± --- | ± --- |
| 3 PLACES | ± --- | ± .010 |
| 2 PLACES | ± 0.25 | ± .014 |
| 1 PLACE | ± 0.35 | ± --- |
| ANGULAR ±1/2° | | |

DRAFT WHERE APPLICABLE MUST REMAIN WITHIN DIMENSIONS

DIMENSION STYLE: MM/IN
SCALE: 4:1
DESIGN UNITS: METRIC
THIRD ANGLE PROJECTION

DRAWN BY: J.A.B DATE: 1976/11/11
CHECKED BY: T.MAHON DATE: 1999/04/02
APPROVED BY: MWILHITE DATE: 1999/04/02
MATERIAL NO.: SEE CHART

TITLE: RIGHT ANGLE WAFER ASSEMBLY

molex MOLEX INCORPORATED

DOCUMENT NO.: SDAE-3061-NB
SHEET NO.: 1 OF 1
SIZE: A3

THIS DRAWING CONTAINS INFORMATION THAT IS PROPRIETARY TO MOLEX INCORPORATED AND SHOULD NOT BE USED WITHOUT WRITTEN PERMISSION