MICRO SWITCH
FREEPORT, ILLINOIS, U.S.A.
A DIVISION OF HONEYWELL
FED. MFG. CODE 91929

SWITCH–ENCLOSED

CATALOG LISTING
18CX SERIES
CHART 1

CONVERSION CHART	
7,25	.285
7,92	.312
8,5	.33
9,4	.37
18,3	.72
20,3	.80
22,3±1,5	.880±.059
25,4	1.00
32,0	1.26
40,0	1.57
50,8	2.00
80,0	3.15
96,0	3.78
98,0	3.86
101,6	4.00
104,0	4.09
1,25 Nm	.922 PF

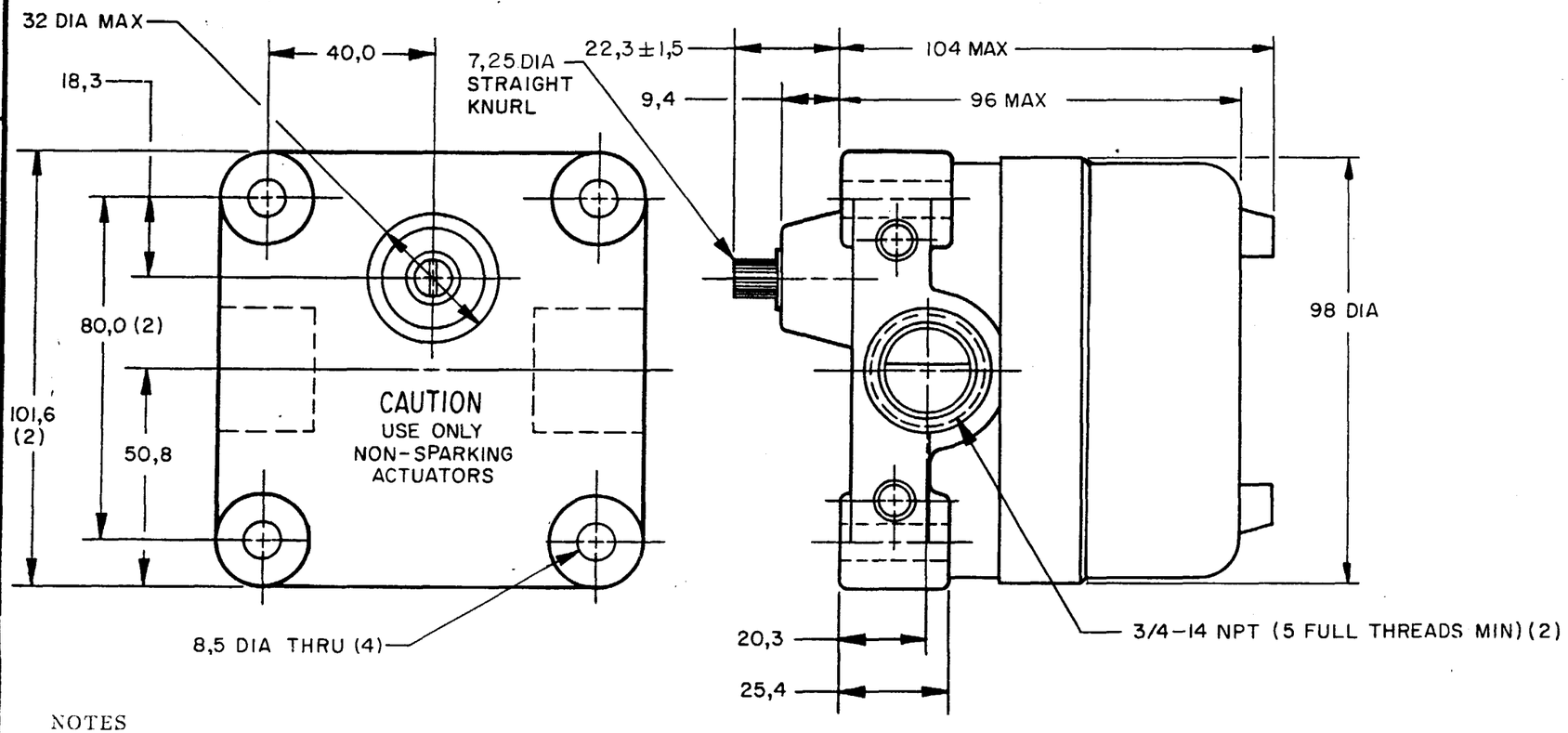

NOTES
1 - EXPLOSION PROOF-UNDERWRITERS LAB INC LISTING FOR HAZARDOUS LOCATIONS CLASS I, GROUPS B, C AND D; CLASS II, GROUPS E, F AND G
2 - ALUMINUM ENCLOSURE FINISHED WITH BLUE AND BLACK EPOXY PAINT
3 - 4-20 ma ANALOG OUTPUT, ADJUSTABLE CW OR CCW FOR 15° TO 90° SPANS
4 - FOR USE IN TEMPERATURES UP TO 85°C
5 - SEE (M) 7CX CHARTS 1 & 2 FOR LEVER ACTUATORS
6 - UNIT PROVIDES NO SHAFT RESTORING FORCE, THE ACTUATING DEVICE MUST CONTROL MOVEMENT OF SHAFT

CAT. LIST 5	DESCRIPTION 3	ELECTRICAL DATA
6 18CX10	ANALOG OUTPUT ONLY	UL LISTED-FILE E 68247 ANALOG OUTPUT: 4-20 ma VOLTAGE RANGE: 12.5 TO 40 VDC USE CLASS 2 POWER SUPPLY
18CX0	ANALOG OUTPUT ONLY	

THIS DRAWING COVERS A PROPRIETARY ITEM AND IS THE PROPERTY OF MICRO SWITCH, A DIVISION OF HONEYWELL. THIS DRAWING IS NOT TO BE COPIED OR USED WITHOUT THE APPROVAL OF MICRO SWITCH.

THIRD ANGLE PROJECTION

SCALE 3/4 TO 1
DO NOT SCALE PRINT

TOLERANCES
APPLY TO DESIGN UNITS. CONVERSIONS ARE ONLY FOR REFERENCE. UNLESS NOTED, TOLERANCES ARE ±

	DIM. mm	TOL. mm/m	DIM. in	TOL. in/in
NO PLACES	X	1/.04		
ONE PLACE	X.X	0.4/.016	X.X	0.02/.00
TWO PLACES	X.XX	0.16/.006	X.XX	0.38/.015
THREE PLACES			X.XXX	0.13/.005
ANGLES				

DESIGN UNITS: SI METRIC ■ US CUSTOMARY □

RAW MATERIAL–COMMERCIAL STANDARD
MICRO SWITCH STANDARDS APPLY
DIMENSIONS ARE TO BE MET BEFORE PROTECTIVE COATINGS ARE APPLIED

WEIGHT 1,13 Kg APPROX

CHARACTERISTICS 15CX

OPERATING FORCE	0,50 Nm MAX	
FULL OVERTRAVEL	90° MAX	

CONTACT ARRANGEMENT

18CX SERIES CHART 1
PAGE 1 OF 1
RELEASE NO. PR-15591
REPLACES
DRAWING NUMBER M
ISSUE 4

REVISIONS
A C063549 TSK 9 MAY 88
B PR18756 TSM 17 NOV 90
C C095241 JAF 21 JUL 99

DRAWN TAD 10 JUN 87
CHECK
FORMTEK FO-52851-A