S

MICRO SWITCH
FREEPORT ILLINOIS, U.S.A
A DIVISION OF HONEYWELL
FED. MFG. CODE 91929

ACTUATOR-SWITCH

CATALOG LISTING
JS-152

JS-152

REPLACES

RELEASE NO. PR-1925

DRAWING NUMBER M

ISSUE 7

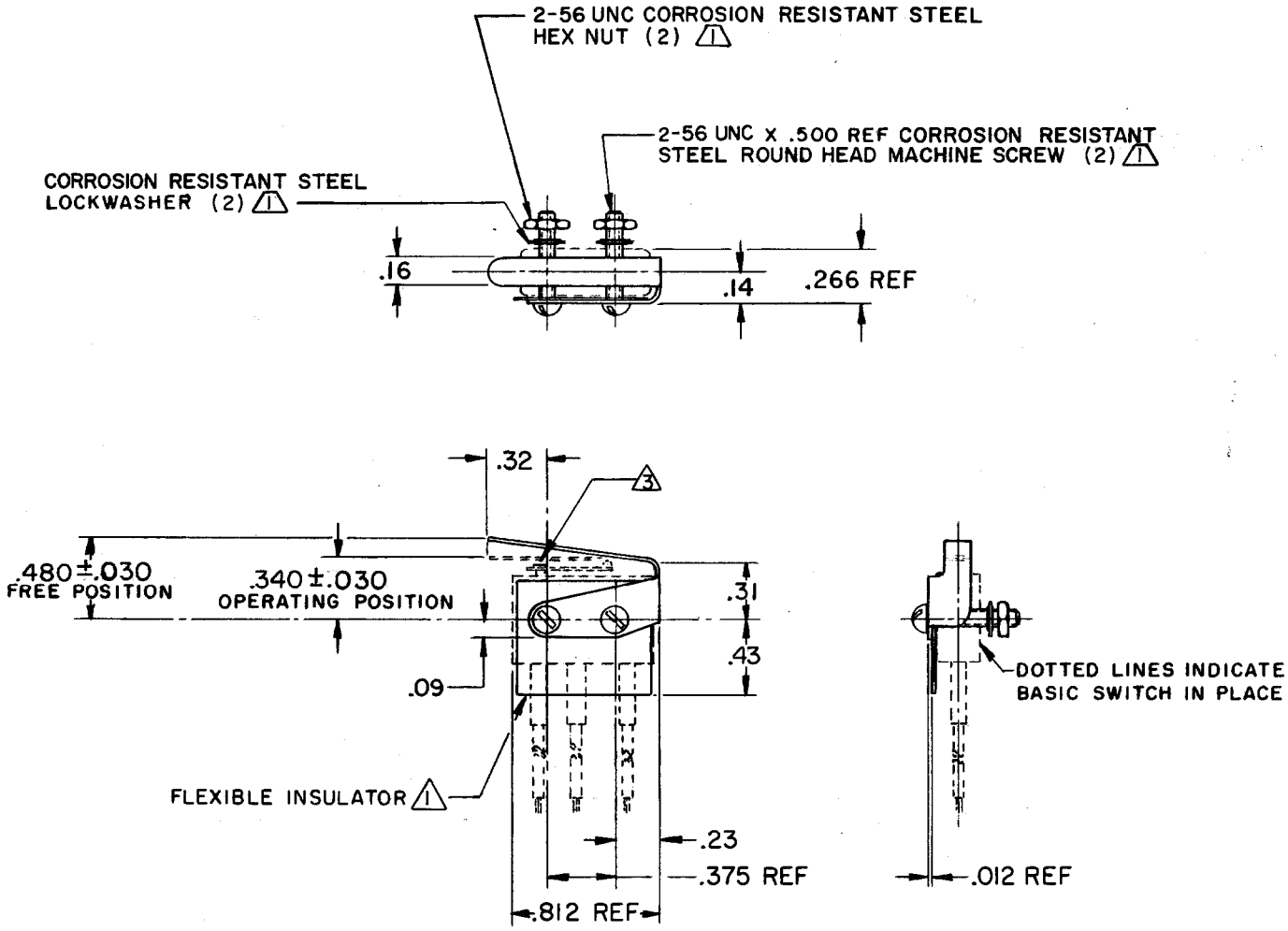

NOTE—
1. FURNISHED UNASSEMBLED
2. CHARACTERISTICS WITH 6HM1-1 BASIC SWITCH INSTALLED ACTUATED .06 FROM END OF LEVER
3. ADJUSTMENT CAUTION: DO NOT ALLOW ACTUATOR LEAF TO COME IN CONTACT WITH HM LEVER TO PREVENT SWITCH SEAL DAMAGE

REVISIONS

A	C029325	LSD 28 AUG 71	23 JUL 71
B	C029487	SRH 13 JAN 72	
C	C066329	TSM 15 MAR 91	
D	OBS CO 73449	CSL 11 NOV 92	CHECK
E	RE INST CO 74625	JWB 18 FEB 93	23 JUL 71
F	C079303	DLT 8 MAR 95	LSD

CHECK

THIS DRAWING COVERS A PROPRIETARY ITEM AND IS THE PROPERTY OF MICRO SWITCH, A DIVISION OF HONEYWELL. THIS DRAWING IS NOT TO BE COPIED OR USED WITHOUT THE APPROVAL OF MICRO SWITCH.

CHARACTERISTICS 2

OPERATING FORCE — — — — — — — 9 OZ MAX

RELEASE FORCE — — — — — — — — — 2 OZ MIN

DIFFERENTIAL TRAVEL — — — — — .030 MAX

OVERTRAVEL — — — — — — — — — .030 MIN

ELECTRICAL DATA

CONTACT ARRANGEMENT

SCALE FULL

DO NOT SCALE PRINT

UNLESS OTHERWISE NOTED
DIMENSIONS ARE IN INCHES

TOLERANCES ARE:

ONE PLACE	(.0)	±.030
TWO PLACE	(.00)	±.015
THREE PLACE	(.000)	±.005
ANGLES		±

WEIGHT

DRAWN OMW 15 JUL 71

FO-50378-1A