REVISIONS				
REV. SYM.	ECO NO.	DESCRIPTION	BY DATE	APP'D DATE
A		ORIG. RELEASE		

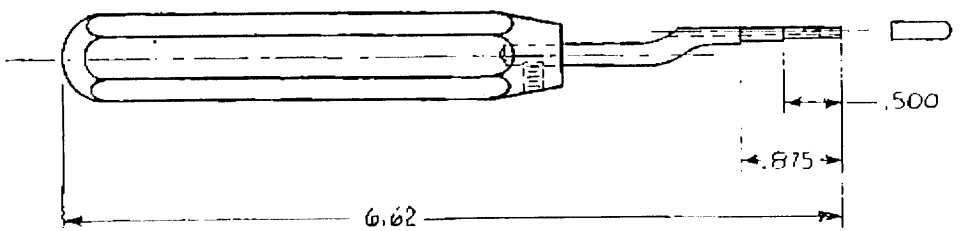

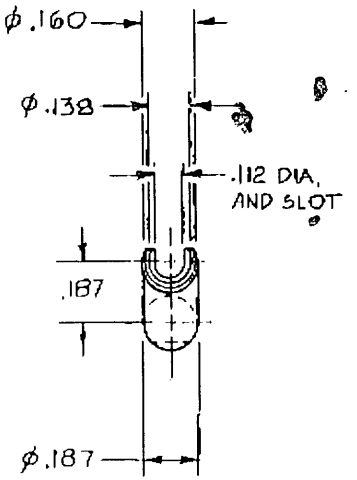

UNCONTROLLED DOCUMENT
WILL NOT BE UPDATED

3585669

MAT'L/HEAT TREAT	ITEM	PART NUMBER	REQ'D	DESCRIPTION/NOMENCLATURE
FINISH	DRN	DATE	DMC DANIELS MANUFACTURING CORP. ORLANDO, FLORIDA CAGE 11851	
	CHK'D	DATE	TITLE ENVELOPE DRAWING INSTALLING TOOL	
	APP'D	DATE		

RESTRICTED & CONFIDENTIAL

CONFIDENTIAL INFORMATION, PROPERTY OF DANIELS MFG. CORP. NOT TO BE DISCLOSED TO OTHERS, REPRODUCED OR USED FOR ANY OTHER PURPOSE, EXCEPT AS AUTHORIZED IN WRITING BY DANIELS MFG. CORP. MUST BE RETURNED TO DANIELS MFG. CORP. ON COMPLETION OF CONTRACT OR FOR OTHER PURPOSE FOR WHICH LENT.

TOLERANCE: UNLESS OTHERWISE SPECIFIED FRACTIONS ±1/32 ANGLES ±1/2° DECIMALS: .0 ±.030 .00 ±.010 .000 ±.005 .0000 ±.0005 REMOVE BURRS & BREAK SHARP EDGES .005-.015

WHERE USED:

SIZE	SCALE	SUPERSEDES	DATE
B	NTS		
POSTING		PART NO. DAK32-ENV	REV. A