~~THIS DRAWING IS UNPUBLISHED.~~ RELEASED FOR PUBLICATION 2004

© COPYRIGHT 2004 BY TYCO ELECTRONICS CORPORATION. ALL RIGHTS RESERVED.

LOC	DIST
1	-

REVISIONS

P	LTR	DESCRIPTION	DATE	DWN	APVD
	A2	REVISED DRAFT, REDRAWN	04 JUL 2005	HY	GT
	B	RELEASED, ECR-05-007275	21 JUL 2005	HY	GT
	B1	RELEASED, ECR-05-018697	13 JAN 2006	HY	GT
	B2	OLD TYCO LOGO REPLACED WITH TE LOGO	28 JUN 2010	PKS	TK

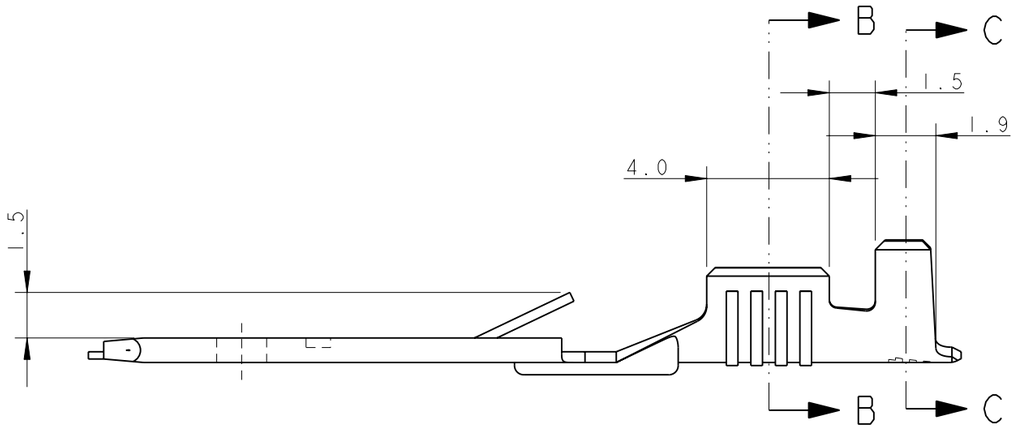

SECTION B-B

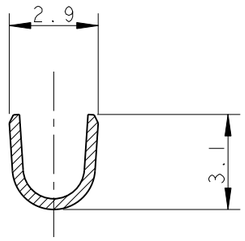

SECTION C-C

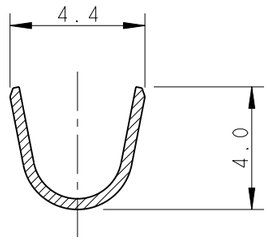

SECTION A-A

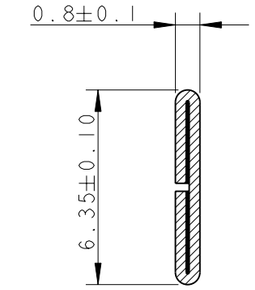

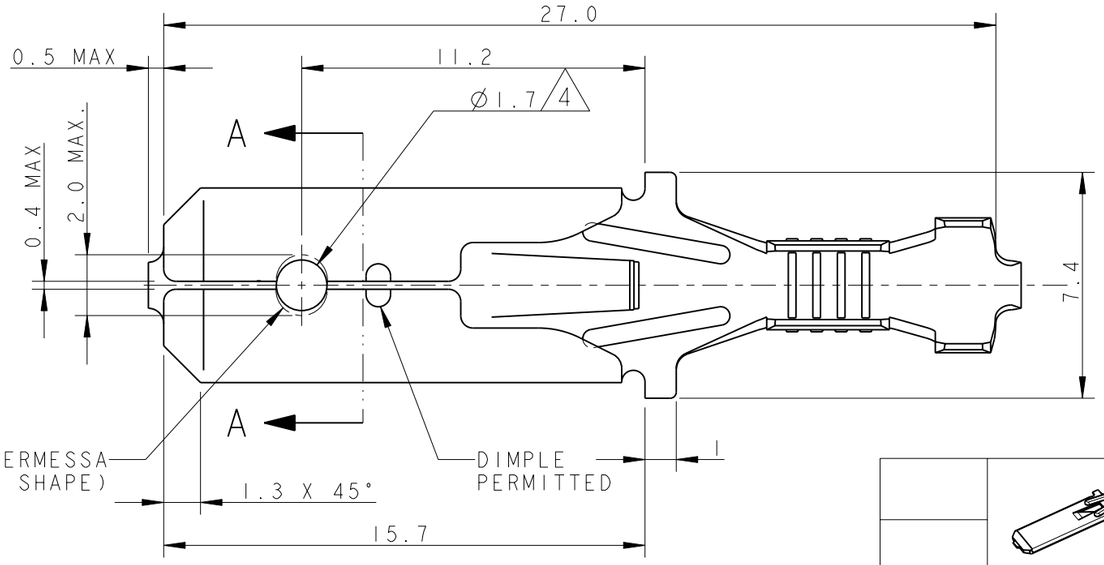

1) STATO DI FORNITURA (SCALE 1:1)
(SUPPLY CONDITION, Scala 1:1)

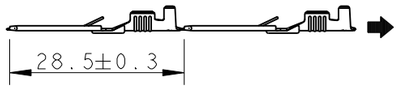

SENSO DI USCITA DEL TERMINALE DALLA BOBINA
(DIRECTION OFF TOP OF REEL)

2) BOBINATO SU BOBINA 12" CON CARTA INTERPOSTA
(REELED ON 12" CARTON TYPE REEL WITH INTERLEAVE PAPER STRIP)

3) SPLICING STRIP PRODUCT BY SPOT WELDING PERMITTED

4 VERSIONI CON FORO (VERSION WITH HOLE)

NOTE (NOTES)	VERSIONI (VERSIONS)	FINITURA (FINISH)	MATERIALE (MATERIAL)	NUMERO (TE P/N)	REV.
		PRE-STAGNATO (PRE-TINNED)	OTTONE (BRASS)	1-293041-2	B
		NUDO (PLAIN)	OTTONE (BRASS)	1-293041-1	B
	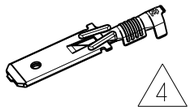 4	PRE-STAGNATO (PRE-TINNED)	OTTONE (BRASS)	0-293041-2	B
		NUDO (PLAIN)	OTTONE (BRASS)	0-293041-1	B

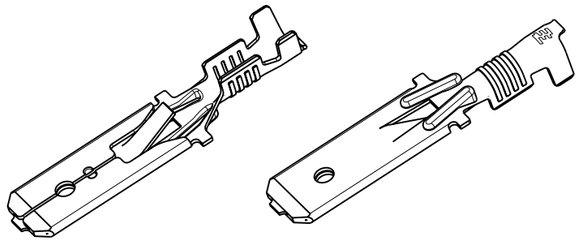

SCALE 2:1

DIAM. ISOLANTE
(INS. DIA. RANGE)
Ø2.3 mm MAX

RANGO FILO
(WIRE RANGE)
0.35-1.00 mm^2

THIS DRAWING IS A CONTROLLED DOCUMENT FOR TYCO ELECTRONICS CORPORATION. IT IS SUBJECT TO CHANGE AND THE CONTROLLING ENGINEERING ORGANIZATION SHOULD BE CONTACTED FOR THE LATEST REVISION.

DIMENSIONS: mm

TOLERANCES UNLESS OTHERWISE SPECIFIED:

0 PLC	±
1 PLC	±0.3
2 PLC	±
3 PLC	±
4 PLC	±
ANGLES	±2°

MATERIAL SEE TABLE

FINISH SEE TABLE

DWN 04 JUL 2005 H. Yaali

CHK G. Turco

APVD

PRODUCT SPEC 108-20020

APPLICATION SPEC 114-20119

WEIGHT -

CUSTOMER DRAWING

Tyco Electronics

Tyco Electronics AMP Italia S.p.A.
10093 Collegno TO

NAME FASTIN-FASTON* Connector, 6.3 mm SR. TAB CONTACT

SIZE	CAGE CODE	DRAWING NO	RESTRICTED TO
A3	00779	C-293041	

SCALE 5:1 SHEET 1 OF 1 REV B2

AMP 1470-19 REV 31MAR2000

Pro/ENGINEER DRAWING