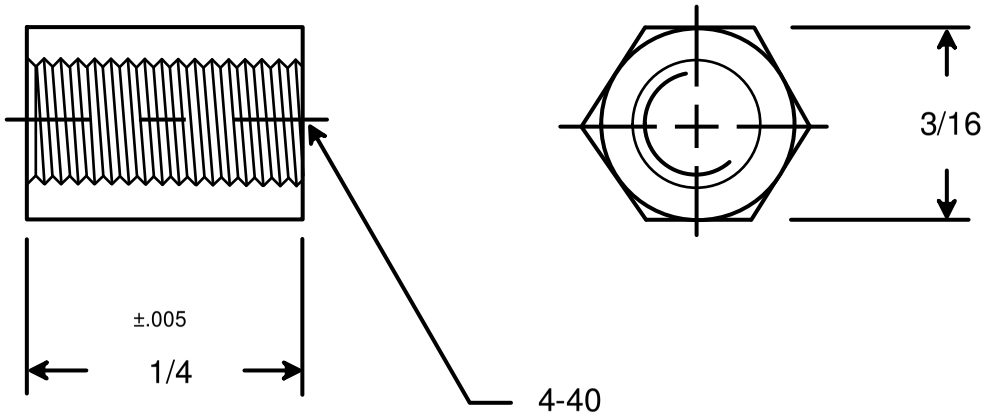

RAF ELECTRONIC HARDWARE
95 SILVERMINE RD. SEYMOUR, CT. 06483
TEL: ***{ 203 } 888-2133***
FAX: ***{ 203 } 888-9860***
WEB: http://www.rafhdwe.com
a Division of **MW Industries** ,Inc.

DRAWING NOT TO SCALE

RoHS COMPLIANT

DRAWN BY : **GARY HUPPRICH**	DATE 09/22/09	TOLERANCES { EXCEPT AS NOTED }	TITLE **HEX FEMALE STANDOFF**
CHECKED BY :	DATE	FRACTION ±.005	
MATERIAL **STAINLESS STEEL**		DECIMAL ±.005	PART NO. **2053-440-SS**
FINISH			