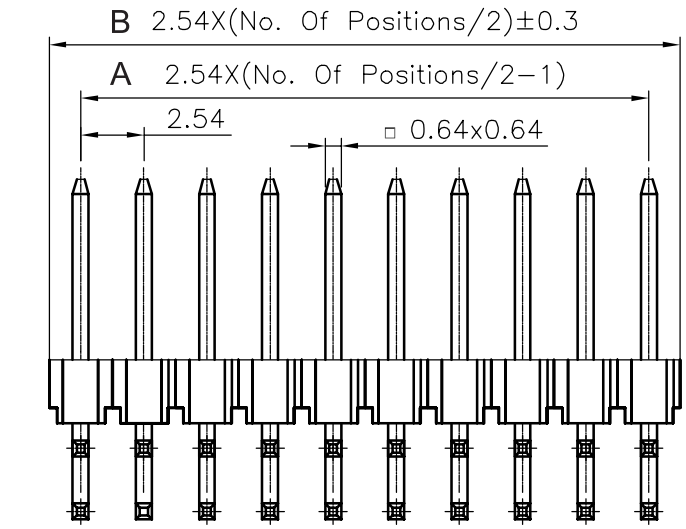

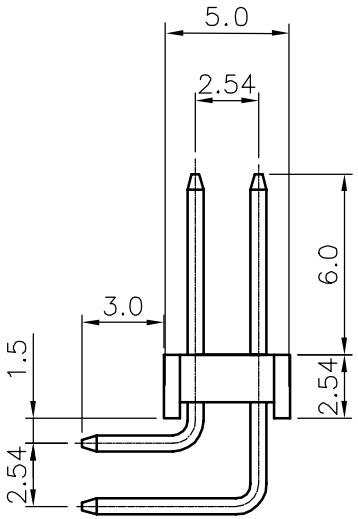

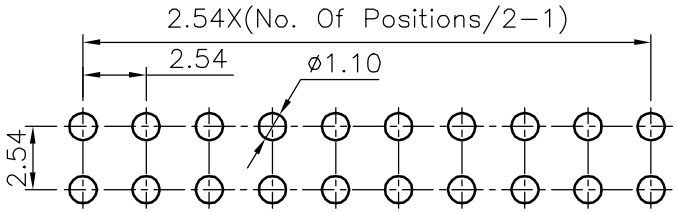

TECHNICAL CHARACTERISTICS

MATERIAL
INSULATOR: PBT
COLOR: BLACK
CONTACT MATERIAL: COPPER ALLOY
CONTACT TYPE: STAMPED
CONTACT PLATING: GOLD
QUALITY CLASS: 3 AS PER CECC 75 301-802
PITCH: 2.54MM

ENVIRONMENTAL
OPERATING TEMPERATURE: -40 UP TO 125°C
FLAMABILITY RATING: UL94-V0
COMPLIANCE: LEAD FREE AND ROHS

ELECTRICAL
CURRENT RATING: 3A
WORKING VOLTAGE: 250V AC
INSULATOR RESISTANCE: >1000 MOHM
DIELECTRIC WITHSTANDING VOLTAGE: 500V AC/MN
CONTACT RESISTANCE: 20 mOHM MAX

SOLDERING
WAVE PROCESS ONLY

PACKAGING
BAG

DIMENSION
A = 2.54 x (NB. PIN / 2 - 1)
B = 2.54x (NB. PIN / 2)

RoHS Compliant

REV	DATE	FILE	BY
G	12-JUL-10	UPDATE	JC
F	08-JUL-10	PACKAGING	JC
E	23-NOV-07	MODIFICATIONS	EC
D	07-DEC-06	DRAW	EC
C	29-MAR-04	LEAD FREE	JP
B	15-MAR-04		JP
A	03-MAY-99	PDF	JP

PROJECTION:

APPROVAL: RJ

GENERAL TOLERANCE
.X = +/- 0.2
.XX = +/- 0.15

UNIT: MM
SCALE:
SHEET: 1/2
DRAW: PEARL

WÜRTH ELEKTRONIK

DESCRIPTION: 2.54MM ANGLED DUAL PIN HEADER

WERI PART NO: 6130xx 21021

SIZE
A4

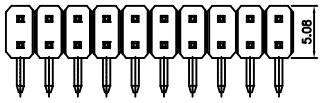

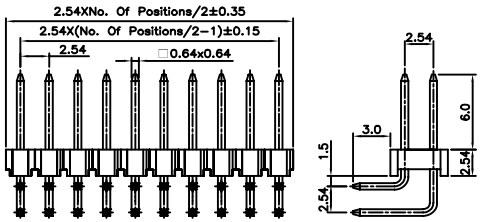

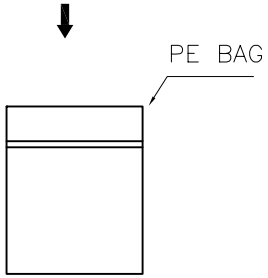

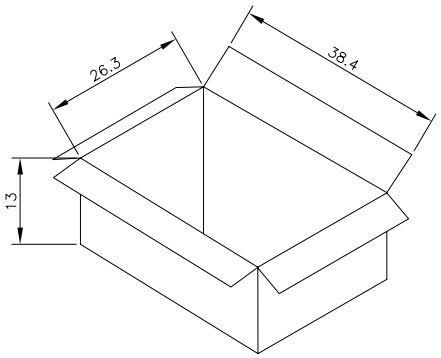

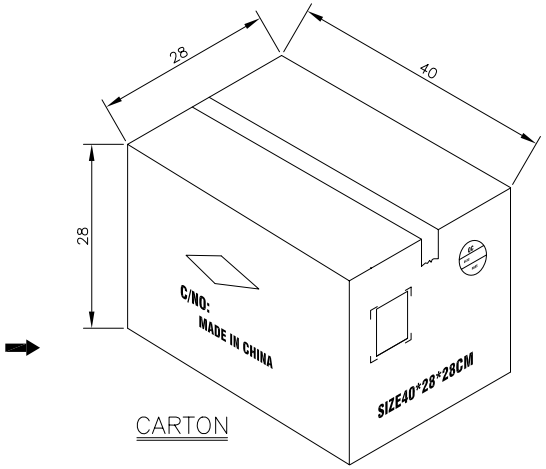

CARTON

Note:

1.Dimension

Inner Carton Size:38.4*26.3*13(CM)

Carton SIze:40*28*28(CM)

2.Quantity:

2 Inner Carton/Carton

Pin	Pcs/Bag	Pcs/Inner Carton	Pcs/Carton	Pin	Pcs/Bag	Pcs/Inner Carton	Pcs/Carton
4	2000	20000	40000	44	100	2000	4000
6	2000	20000	40000	46	100	2000	4000
8	1000	10000	20000	48	100	2000	4000
10	1000	10000	20000	50	100	2000	4000
12	500	5000	10000	52	100	2000	4000
14	500	5000	10000	54	100	2000	4000
16	500	5000	10000	56	100	2000	4000
18	500	5000	10000	58	100	2000	4000
20	500	5000	10000	60	100	2000	4000
22	500	5000	10000	62	100	2000	4000
24	300	3000	6000	64	100	2000	4000
26	300	3000	6000	66	100	2000	4000
28	300	3000	6000	68	100	2000	4000
30	300	3000	6000	70	100	2000	4000
32	300	3000	6000	72	100	2000	4000
34	300	3000	6000	74	100	2000	4000
36	300	3000	6000	76	100	2000	4000
38	300	3000	6000	78	100	2000	4000
40	100	2000	4000	80	100	2000	4000
42	100	2000	4000				

RoHS Compliant

REV	DATE	FILE	BY
G			
F			
E□			
D□			
C□			
B□			
A□			

PROJECTION:

GENERAL TOLERANCE

.X = +/_ 0.2

.XX = +/_ 0.15

WÜRTH ELEKTRONIK

APPROVAL: RJ

UNIT: MM

SCALE:

SHEET: 2/2

DRAW: PEARL

DESCRIPTION: 2.54MM ANGLED DUAL PIN HEADER

WERI PART NO: 6130xx 21021_TPK

SIZE

A4