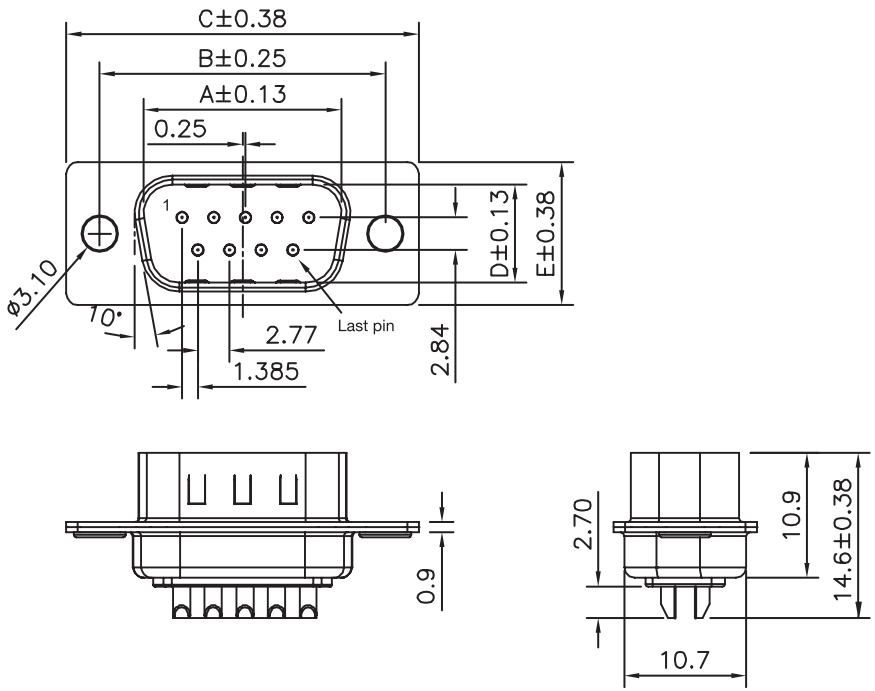

TECHNICAL CHARACTERISTICS

MATERIAL
INSULATOR: PBT
FLAMABILITY RATING: UL94-V0
COLOR: WHITE
CONTACT MATERIAL: COPPER ALLOY
CONTACT TYPE: STAMPED
CONTACT PLATING: SELECTIVE GOLD
SHIELDING: STEEL NICKEL PLATED
QUALITY CLASS: 3 AS PER IEC60 603-13

ENVIRONMENTAL
OPERATING TEMPERATURE: -40 UP TO 105°C
COMPLIANCE: LEAD FREE AND ROHS

ELECTRICAL
CURRENT RATING: 3A
WORKING VOLTAGE: 125V AC
INSULATOR RESISTANCE: >5000 MOHM
DIELECTRIC WITHSTANDING VOLTAGE: 1000V AC/MN
CONTACT RESISTANCE: 30 mOHM MAX

STANDARD
CERTIFIED: E323964 / MODEL NUMBER 618-24M

PACKAGING
TRAY

DIMENSION

PINS	A	B	C	D	E
9	16.92	24.99	30.81	8.38	12.50
15	25.25	33.32	39.14	8.38	12.50
25	38.96	47.04	53.04	8.38	12.50
37	55.42	63.50	69.32	8.38	12.50

RoHS Compliant

REV	DATE	FILE	BY
G	26-OCT-10	SHIELDING	GG
F	07-DEC-09	WORKING VOLT.	JP
E	19-NOV-09	STANDARD	JP
D	01-OCT-09	NEW DRAW	JP
C	10-FEB-09	DRAW	JP
B	20-FEB-07	DRAW	EC
A	01-MAR-06	PDF	JP

PROJECTION:

APPROVAL: RJ

GENERAL TOLERANCE
.X = +/- 0.2
.XX = +/- 0.15

UNIT: MM
SCALE:
SHEET: 1/1
DRAW: MIKE

WÜRTH ELEKTRONIK

DESCRIPTION: MALE SOLDER BUCKET

WERI PART NO: 618 0xx 248 23

SIZE
A4