MICRO SWITCH
a Honeywell Division
FED. MFG. CODE 91929

INTERFACE MODULE RAILWAY

CATALOG LISTING
RDS-DIN1-PA-D1

THIS DRAWING COVERS A PROPRIETARY ITEM AND IS THE PROPERTY OF MICRO SWITCH. A DIVISION OF HONEYWELL. THIS DRAWING IS NOT TO BE COPIED OR USED WITHOUT THE APPROVAL OF MICRO SWITCH

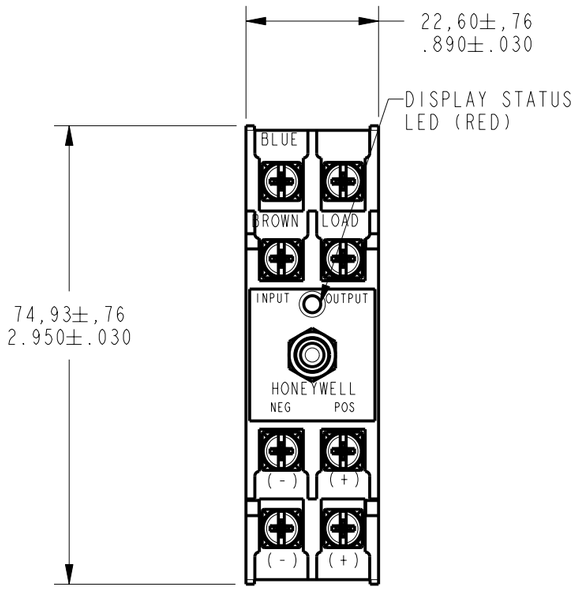

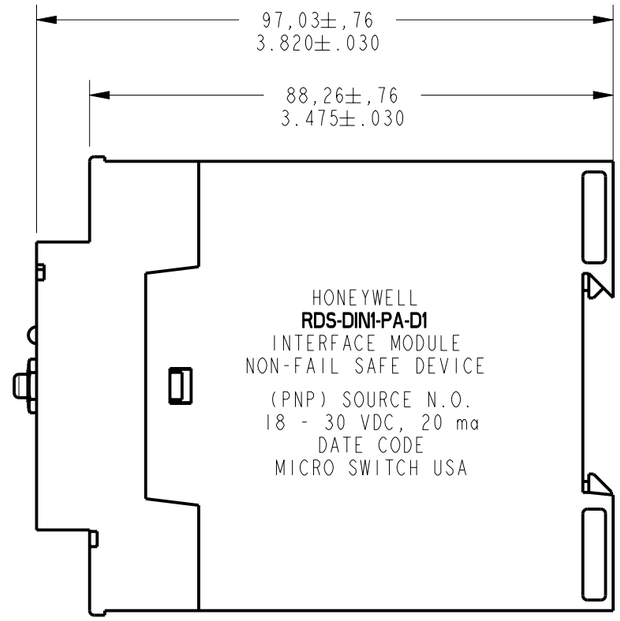

ELECTRICAL SPECIFICATION:
SUPPLY VOLTAGE : 18-30 VDC
OUTPUT TYPE : N.O. CURRENT SOURCE (PNP)
SATURATION VOLTAGE : 6.5 V MAX 20 mA
LOAD CURRENT : 20 mA MAX
LEAKAGE CURRENT : 50 uA MAX
POWER UP DELAY TIME 50 mSEC MAX
ENVIROMENTAL:
TEMPERATURE RANGE: -40° C TO 70° C
SHOCK : 6G, 11 mSEC, HALF SINE WAVE
VIBRATION : 10G / .060 INCH AMPLITUDE 10 TO 500 Hz
HUMIDITY : 10 DAYS 95% MIN
FEATURES :
REVERSE POLARITY PROTECTION
SHORT CIRCUIT PROTECTION
RADIATED ELECTRIC FIELD IMMUNITY
IEC801-3, LEVEL 3, 10 VOLTS / METER
FREQUENCY RANGE : 27 MHz TO 50 MHz
TRANSIENT IMMUNITY : IEC 801-4, LEVEL 4, 2000 VOLTS
SURGE IMMUNITY : IEC 801-5, LEVEL 2 2000 VOLTS, 1/50 uSEC 12 OHMS
NOMINAL DELAY : 100 uSEC

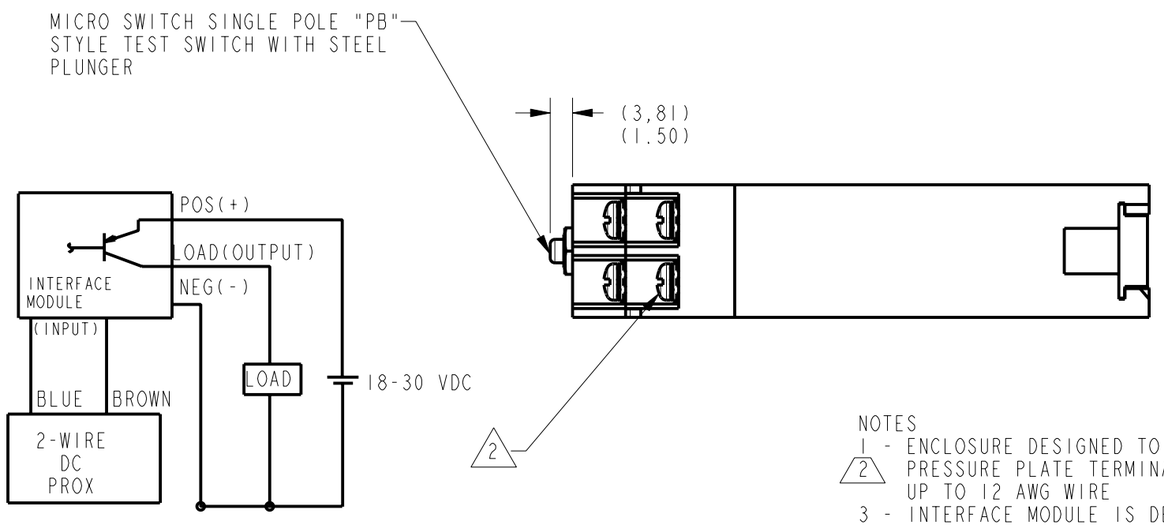

NOTES
1 - ENCLOSURE DESIGNED TO BE MOUNTED ON 35mm DIN RAIL
2 PRESSURE PLATE TERMINALS ARE DESIGNED TO ACCOMMODATE UP TO 12 AWG WIRE
3 - INTERFACE MODULE IS DESIGNED TO BE USED WITH THE HONEYWELL 926FS SERIES RAILWHEEL PROXIMITY SWITCH
4 - LED AND OUTPUT IS "ON" WHEN TARGET IS SENSED BY PROXIMITY SWITCH
5 - 2 - WIRE, DC OUTPUT OF PROXIMITY SWITCH IS CONVERTED TO 3 - WIRE, DC TYPE OUTPUT

THIRD ANGLE PROJECTION

SCALE FULL

DO NOT SCALE PRINT

TOLERANCES
APPLY TO DESIGN UNITS. CONVERSIONS ARE ONLY FOR REFERENCE. UNLESS NOTED, TOLERANCES ARE ±

	DIM. mm	TOL mm/in	DIM. in	TOL mm/in
NO PLACES	X	1/.04		
ONE PLACE	X.X	0.4/.016	X.X	0.8/.03
TWO PLACES	X.XX	0.15/.006	X.XX	0.38/.015
THREE PLACES			X.XXX	0.13/.005
ANGLES				

DESIGN UNITS SI METRIC [X] US CUSTOMARY [ ]

WEIGHT

ANSI Y14.5M-1982 APPLIES

CATALOG LISTING RDS-DIN1-PA-D1
PAGE 1 OF 1
ISSUE 2
REPLACES -
RELEASE NO. PR-23716

REVISIONS		
A	204312	JLH 7NOV01

DRAWN	LJK	9 NOV 98
CHECK		9 NOV 98
SAV		
CHECK		
CHECK		
CHECK		

PTC/CAD