HANDHELD ENCLOSURE

HH-097 (160x94x25MM)

- Produced in ABS Material
- Available in Black

1 HH-097 BASE

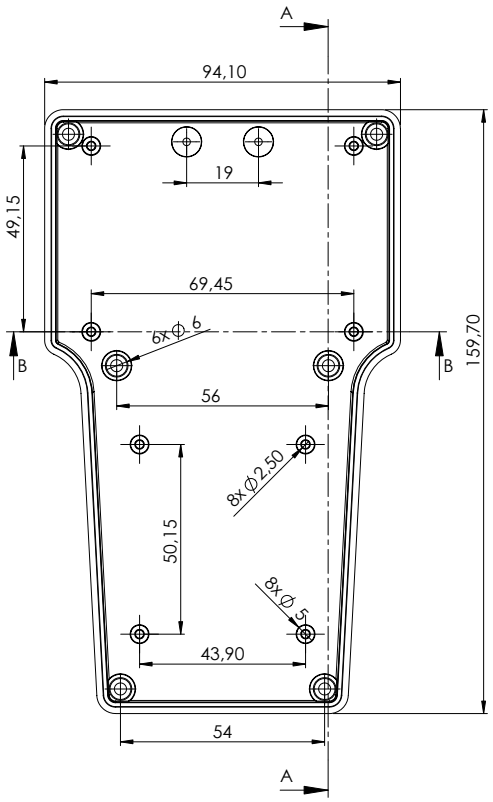

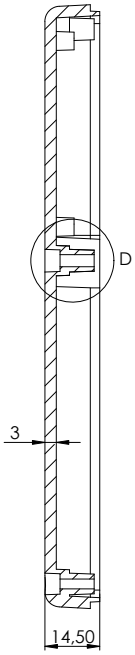

A-A

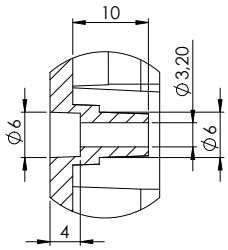

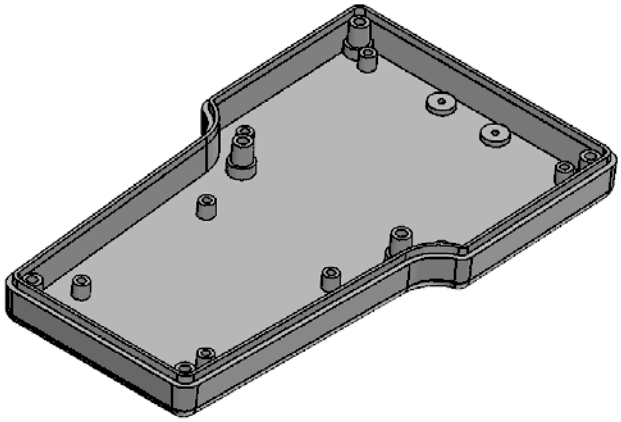

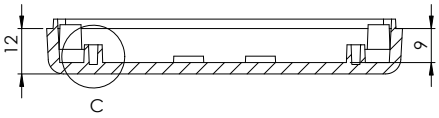

B-B

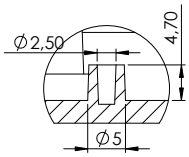

Hitaltech reserve the right to make changes without prior notice. Revision: 1 Date: 14/02/2011

2 HH-097 COVER

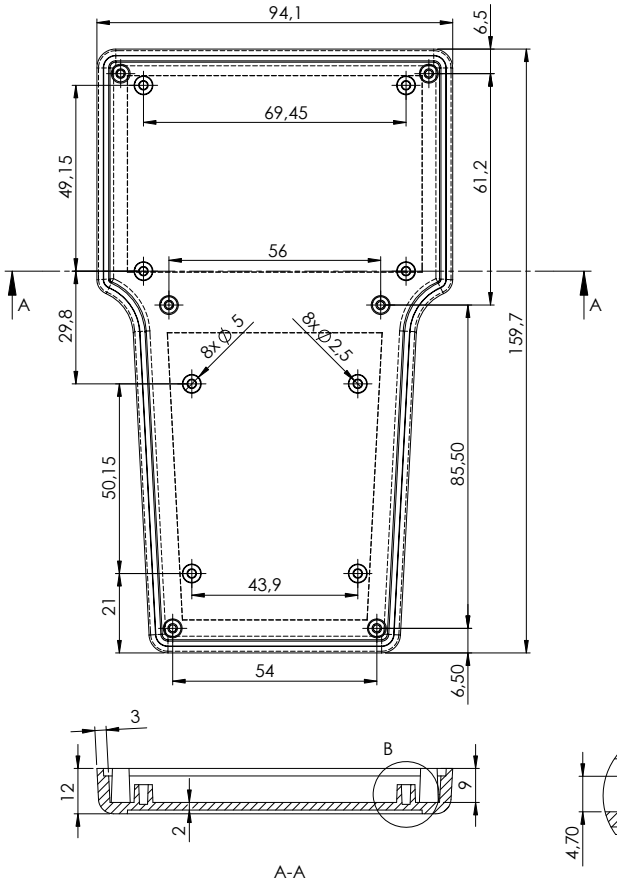

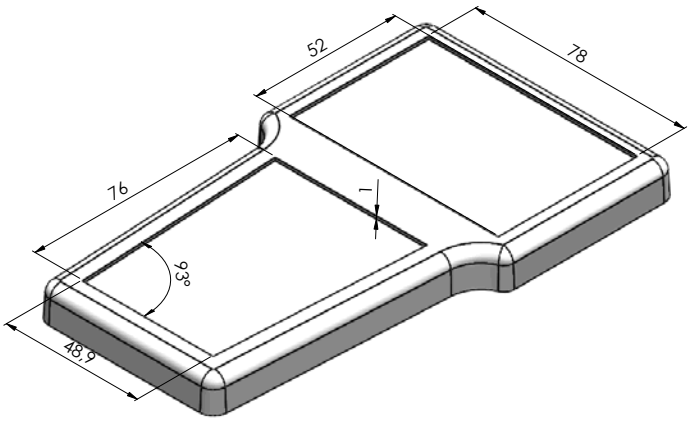

3 HH-097 PCB

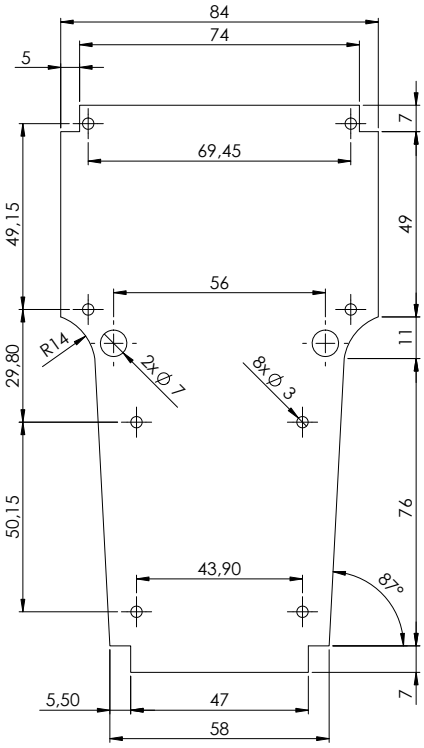

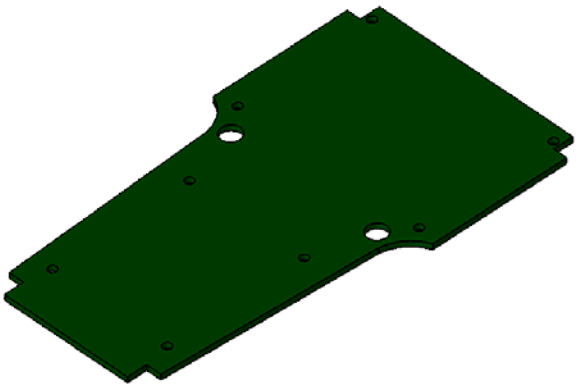

Hitaltech SA/NV
(Sales Benelux, France & Italy)
T: +32 2725 2075
E: europe-sales@hitaltech.com

Hitaltech UK Ltd
(Sales UK & Eire)
T: +44 (0) 1253 899910
E: uksales@hitaltech.com

Hitaltech Gmbh
(Sales Germany)
T: +49 (0) 351 65 57 39 10
E: de-verkauf@hitaltech.com

Hitaltech Corp. Japan
(Sales Asia)
T: +81 (0)467 23 81 00
E: japan-sales@hitaltech.com

Hitaltech Headquarters
(Sales for the Rest of the World)
T: +32 2725 2075
E: europe-sales@hitaltech.com