# TYPE - CFStraightIP65

| | | | | NPT | Threaded | Fittings |
|---|---|---|---|---|---|---|
| Cat # | US Trade Size | MM | NW | Thread Size | Unit Pack | Part # |
| CF-140 | 1/4" | 10 | 7 | PG-7 | 25 | 90197 |
| CF-516 | 5/16" | 12 | 10 | PG-9 | 25 | 90172 |
| CF-10 | 3/8" | 16 | 12 | 1/2" NPT | 25 | 90201 |
| CF-11 | 1/2" | 20 | 17 | 1/2" NPT | 25 | 90221 |
| CF-12 | 3/4" | 25 | 23 | 3/4" NPT | 25 | 90241 |
| CF-13 | 1" | 32 | 29 | 1" NPT | 10 | 90261 |
| CF-14 | 1-1/4" | 40 | 36 | 1-1/4" NPT | 5 | 90281 |
| CF-15 | 1-1/2' | 50 | 48 | 1-1/2" NPT | 2 | 90301 |

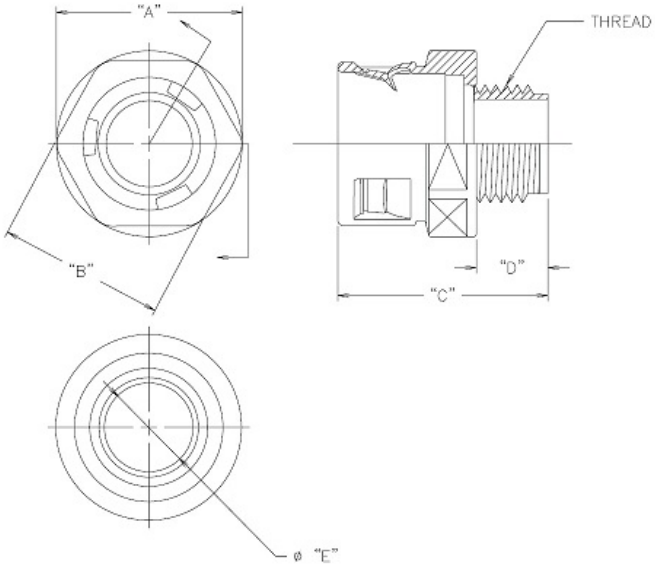


| Cat # | U.S. Trade Size | Thread Size | A | B | C | D | E |
|---|---|---|---|---|---|---|---|
| CF-140 | 1/4" | PG-7 | | | | | |
| CF-516 | 5/16" | PG-9 | | | | | |
| CF-10 | 3/8" | 1/2" NPT | .985 | .815 | 1.380 | .500 | .495 |
| CF-11 | 1/2" | 1/2" NPT | 1.155 | 1.060 | 1.510 | .500 | .585 |
| CF-12 | 3/4" | 3/4" NPT | 1.525 | 1.410 | 1.680 | .540 | .745 |
| CF-13 | 1" | 1" NPT | 1.730 | 1.565 | 1.780 | .540 | 1.030 |
| CF-14 | 1-1/4" | 1-1/4" NPT | 2.070 | 1.975 | 2.225 | .730 | 1.325 |
| CF-15 | 1-1/2" | 1-1/2" NPT | 2.675 | 2.565 | 2.350 | .700 | 1.545 |

**TYPE - CFStraightIP65**
IP 65 is the equivalent to NEMA 4 and can witshstand spraying water from entering.

**Plastic Used:** NYLON See the Chemical Resistance Guide

| High Mech. Strength | Listed For Direct Burial | Halogen Free | Low Fire Hazard | Accepts Standard Liquidtight Fittings | Self Extinquish | EMI/RFI Shielding | Oil Resistance | Acid Resistance |
|---|---|---|---|---|---|---|---|---|
| | | | | | | | | |