PROFIBUS DP/V1 Fieldbus Coupler

12 Mbaud; digital and analog signals

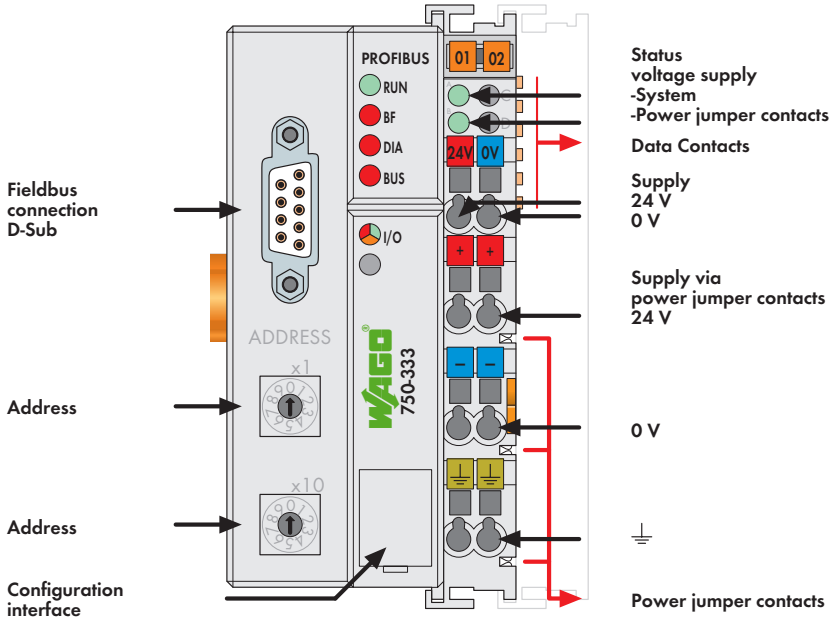

This buscoupler interfaces the I/O modules of the WAGO-I/O-SYSTEM to PROFIBUS DP.

When initializing, the buscoupler determines the module structure of the node, to create the process image in PROFIBUS. In order to optimize addresses, the I/O modules with a bit width smaller than 8 are grouped in one byte.

It is furthermore possible to deactive I/O modules and to modify the image of the node according to the connected signals without having to modify the existing application.

The diagnosis concept is based on diagnostics according to the EN 50170 standard. Therefore the programming of modules is not necessary to interpret the diagnostic information from each manufacturer.

Notice: GSD files required

Description	Item No.	Pack. Unit
PROFIBUS DP/V1 12MBd	**750-333**	1
PROFIBUS DP/V1/T	**750-333/025-000**	1
Operating temperature -20 °C ... +60 °C		

Accessories		Item No.	Pack. Unit
GSD files	Download: www.wago.com		
Miniature WSB Quick marking system			
	plain	**248-501**	5
	with marking	see pages 304 ... 305	

Standards and Approvals	(Approvals for product variations upon request)
Standard	EN 50170
Conformity marking	CE
UL 508	
ANSI/ISA 12.12.01	Class I, Div. 2, Grp. ABCD, T4
EN 60079-15	I M2 / II 3 GD Ex nA nL IIC T4
	BR-Ex nA II T4
Shipbuilding	see "Approvals Overview" in section 1

System Data	
No. of couplers connected to Master	96 with repeater
Max. no. of I/O points	approx. 6000 (depends on master)
Transmission medium	Cu cable acc. to EN 50170
Max. length of fieldbus segment	100 m ... 1200 m (depends on baud rate/cable)
Baud rate	9.6 Kbaud ... 12 Mbaud
Transmission time	typ. 1 ms (10 couplers; 32 digital I/Os per coupler at 12 Mbaud) max. 3.3 ms
Buscoupler connection	1 x D-Sub 9; socket

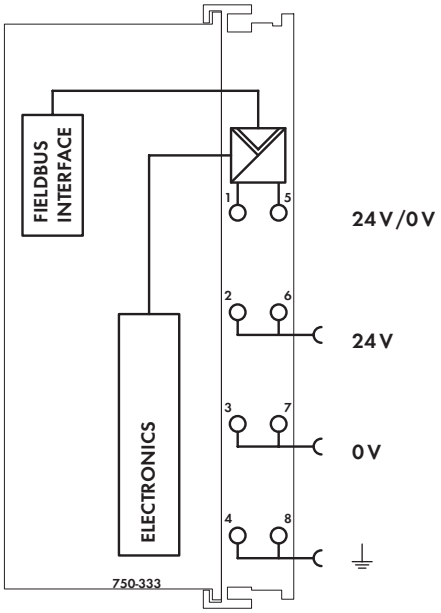

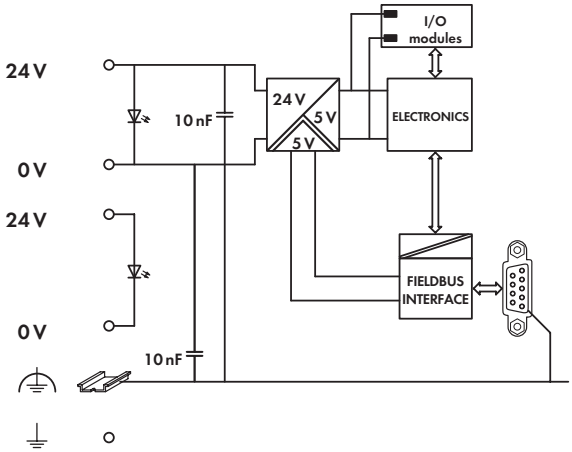

Technical Data

Number of I/O modules	63
Fieldbus	
Max. input process image	244 bytes
Max. output process image	244 bytes
Configuration	via PC or PLC
Voltage supply	24 V DC (-25 % ... +30 %)
Max. input current (24 V)	500 mA
Efficiency of the power supply	87 %
Internal current consumption (5 V)	200 mA
Total current for I/O modules (5 V)	1800 mA
Isolation	500 V system/supply
Voltage via power jumper contacts	24 V DC (-25 % ... +30 %)
Current via power jumper contacts (max.)	10 A DC

General Specifications

Operating temperature	0 °C ... +55 °C
Wire connection	CAGE CLAMP®
Cross sections	0.08 mm² ... 2.5 mm² / AWG 28 ... 14
Stripped lengths	8 ... 9 mm / 0.33 in
Dimensions (mm) W x H x L	51 x 65 x 100
	Height from upper-edge of DIN 35 rail
Weight	182 g
Storage temperature	-25 °C ... +85 °C
Relative air humidity (no condensation)	95 %
Vibration resistance	acc. to IEC 60068-2-6
Shock resistance	acc. to IEC 60068-2-27
Degree of protection	IP20
EMC CE-Immunity to interference	acc. to EN 61000-6-2 (2005)
EMC CE-Emission of interference	acc. to EN 61000-6-4 (2007)
EMC marine applications - Immunity to interference	acc. to Germanischer Lloyd (2003)
EMC marine applications - Emission of interference	acc. to Germanischer Lloyd (2003)