Part Number: 35725-2411

Status: Active

Description: Quick Disconnect, Female, for 14-18 AWG (2.00 - 0.80mm²) Wire, Metal Strip, Tab 6.35 x 0.81mm, Slip-On Type with Slot, Post Tin Plating, High Tension Type

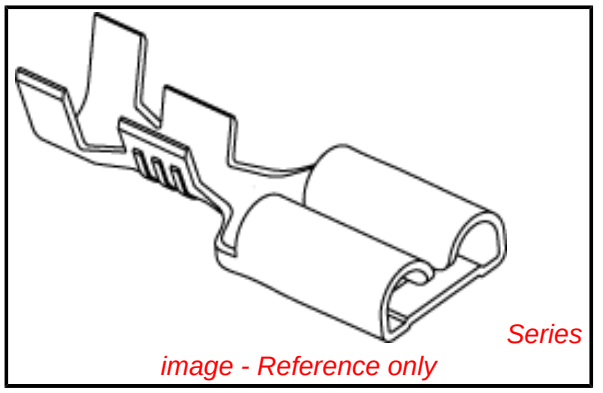

Documents:

Drawing (PDF)
Product Specification PS-35703-001 (PDF)
Packaging Specification PK-35725-012 (PDF)
RoHS Certificate of Compliance (PDF)

Agency Certification

UL	E92853

General

Product Family	Quick Disconnects
Series	35725
Crimp Quality Equipment	Yes
Product Name	N/A
Type	Quick Disconnect

Physical

Barrel Type	Open
Gender	Female
Glow-Wire Compliant	No
Insulation	None
Lock to Mating Part	Yes
Material - Metal	Brass
Orientation	Straight
Packaging Type	Reel
Polarized to Mating Part	No
Tab Thickness	0.81mm
Tab Width	6.35mm
Temperature Range - Operating	-40°C to +120°C
Wire Insulation Diameter	3.81mm max.
Wire Size AWG	14, 16, 18
Wire Size mm²	0.80 - 2.00

Electrical

Voltage - Maximum	300V

Material Info

Reference - Drawing Numbers

Packaging Specification	PK-35725-012
Product Specification	PS-35703-001
Sales Drawing	SD-35725-002

EU RoHS
ELV and RoHS Compliant
REACH SVHC
Contains SVHC: No
Low-Halogen Status
Low-Halogen

China RoHS

Need more information on product environmental compliance?

Email productcompliance@molex.com
For a multiple part number RoHS Certificate of Compliance, click here

Please visit the Contact Us section for any non-product compliance questions.

Search Parts in this Series
35725Series

Use With
6.35mm Tab