Honeywell

SMALL PRECISION LIMIT SWITCH

CATALOGUE LISTING

14CE SERIES

CHART MTG-CE-86

SWITCH TYPE	ISSUE	RELEASE NUMBER	OPTIONS	DIFF. TRAVEL (MAX.)	OPERATING FORCE (MAX) NEWTONS	OPERATING FORCE (MAX) GMF	RELEASE FORCE (MIN) NEWTONS	RELEASE FORCE (MIN) GMF	OPERATING POSITION	MAX FREE LENGTH
14CE1			A, D, G, P, H, L, V	0.1	11.8	1200	4.4	450	15.7±1.0	54
			K, V	0.1	22.5	2300				
14CE2 14CE3			A, G, P	0.1	11.8	1200	4.4	450	28.5±1.0	67
			K, V.	0.1	22.5	2300				
14CE18			A, D, G, H, L, P	0.1	22.5	2300	4.4	450	24.9±1.0	63
14CE19			A, D, G, H, L, P	0.1	11.8	1800	4.4	450	ADJUSTABLE 32 TO 39	77.4
14CE22			A, D, G, H, L, P	0.1	9	920	3	300	27.4 MAX	64.1
14CE27			A, D, G, H, L, P	0.1	11.8	1200	4.4	450	29.3±1.0	67.2
14CE28 14CE29	1 1	MS 11680 MS 11463	A, D, G, H, L, P	0.1	11.8	1200	4.4	450	42.5±1.0	81
14CE31 14CE55			A, D, G, H, L, P	0.1	17.5	1800	4.4	450	34.4±1.0	73
14CE66			A, D, G, H, L, P	0.1	11.8	1200	4.4	450	24.4±1.0	63

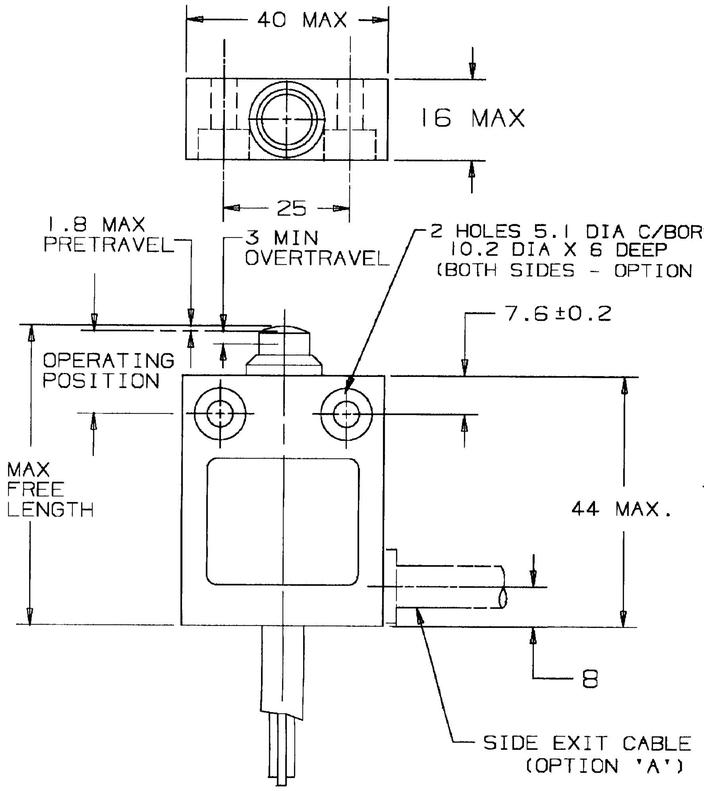

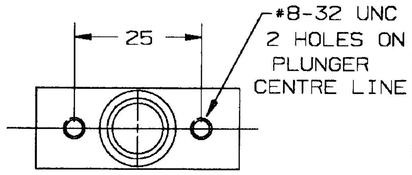

TOP MOUNTING-(OPTION 'P')

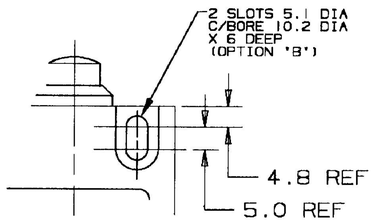

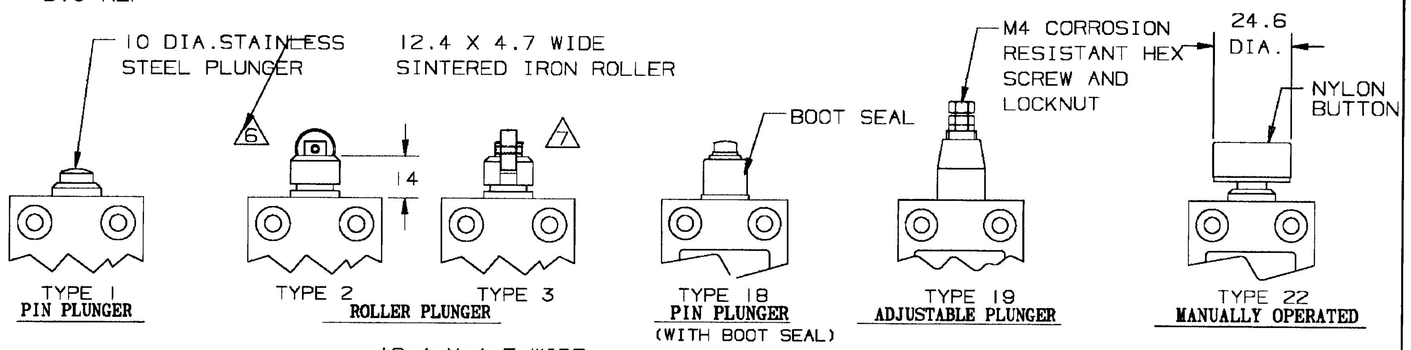

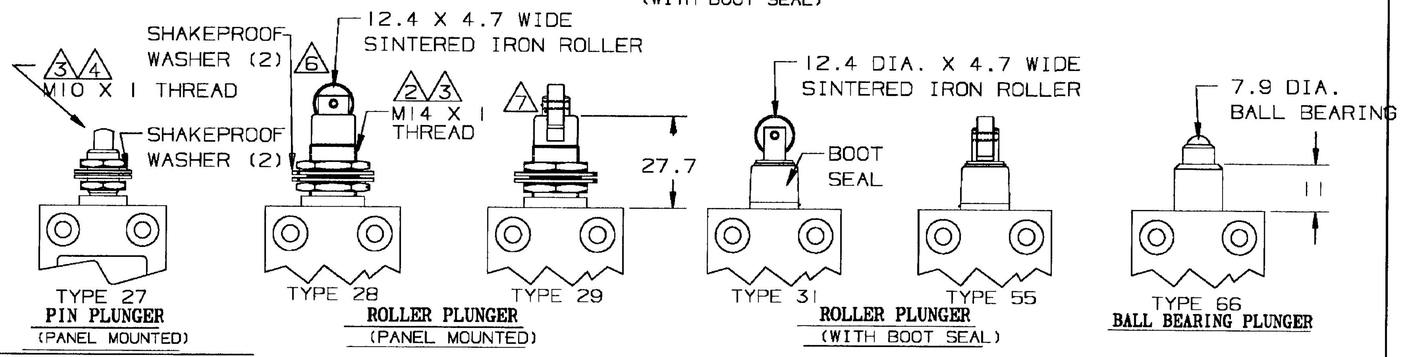

CATALOGUE LISTING CONVENTION

OPTIONS CAN BE COMBINED WITHIN LOGICAL LIMITS (EG 14CE2-1AK)

8 14CE □ — □ □

ACTUATOR TYPE

1, 2, 3, 18, 19, 22, 27
28, 29, 31, 55 OR 66

CABLE LENGTH

LENGTH IN METRES

OPTIONS

A - SIDE ENTRY
B - ELONGATED MOUNTING HOLES
C - DOUBLE BREAK BASIC
D - HALOGEN FREE CABLE
F - BIFURCATED GOLD CONTACTS
G - GOLD CONTACTS
H - HIGH TEMPERATURE (150°C)
K - 'O' RING SEALED PLUNGER (NITRILE)
L - LOW TEMPERATURE. (-40°C)
L1 -LOW TEMPERATURE. (-40°C) CABLE NOT SUITABLE FOR FLEXING
P - TOP MOUNTING
V - VITON 'O' RING SEALED PLUNGER

NOTES:-

1 : DIE CAST HOUSING FINISHED IN GREY PAINT
2 : SWITCH MOUNTS THROUGH A 14,5 DIA HOLE
3 : MAXIMUM PANEL THICKNESS = 4,2
4 : SWITCH MOUNTS THROUGH 10.5 DIA HOLE
5 : TEMPERATURE RANGE : 0°C TO +70°C (STANDARD)
6 : ROLLER PARALLEL WITHIN 3° TO MOUNTING FACE
7 : ROLLER PERPENDICULAR WITHIN 3° TO MOUNTING FACE
8 : ALL LOGICAL LISTINGS ARE IEC 947-5-1 APPROVED EXCEPT: OPTIONS C, F, G.
9 : LISTINGS CAN BE SUFFIXED WITH R.S (e.g 14CE1-1KRS)

BASIC SWITCH	ELECTRICAL RATINGS		CIRCUIT DIAGRAM	CABLE
STANDARD SILVER CONTACTS	5A - 250VAC (STANDARD)	IEC 947-5-1 EN60947-5-1 AC14 D300 DC13 R300	S.P.D.T. BROWN 2 BLUE 1 3 BLACK GREEN/YELLOW	4 X 0.75 MM HARMONISED CENELEC CABLE.
GOLD CONTACTS - OPTION 'G'	1A 125VAC 30VDC			

THE COPYRIGHT OF THIS DRAWING IS THE PROPERTY OF HONEYWELL LTD. THE DRAWING IS SUPPLIED IN CONFIDENCE AND MUST NOT BE USED FOR ANY PURPOSE OTHER THAN THAT FOR WHICH IT IS SUPPLIED

THIRD ANGLE PROJECTION

PLOT SCALE 1/1

14 CE SERIES CHART MTG-CE-86

M | DRAWING NUMBER | 4 | ISSUE | RELEASE NUMBER MS 11463 | REPLACES

REVISIONS
2 10.2.92 MS-11680
3 23.8.95 CN-16516
4 21.12.95 CN-16536

DRAWN ML 23.4.90 | CHECK | TRACED