Honeywell

LIMIT SWITCH

CATALOGUE LISTING
GLS

CHART NO.
MTG-GL-169

MTG-GL-169

REPLACES

DRAWING NUMBER A018-170

ISSUE 14

RELEASE NUMBER

REVISIONS

6	9/96	A018-275
7	12/96	A018-293
8	7/97	CO-000083
9	8/97	CO-000106
10	CO/395	I WEIR 6/98
11	PR/921	M LOCH 5/01
12	CO*2667	M LOCH 02/03
13	0007574	KSR 29SEP04
14	0037216	BS 07FEB08

MODIFY ON CAD SYSTEM ONLY

DRAWN	M. LOCH	3/93
CHECK	I. WEIR	3/93
DESIGN	J. BOYD	3/93
AUTHOR'N	P. TRICKETT	3/93

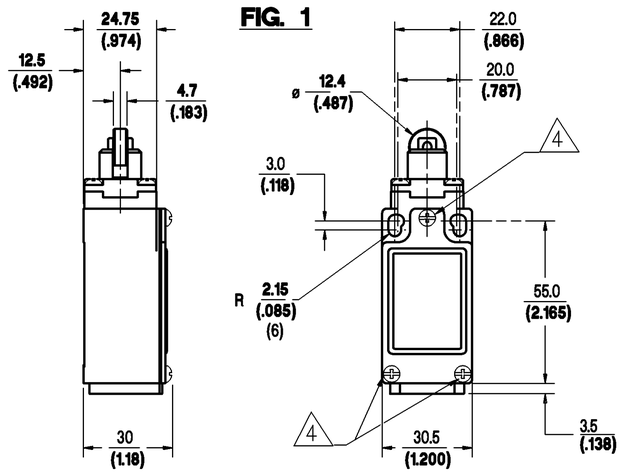

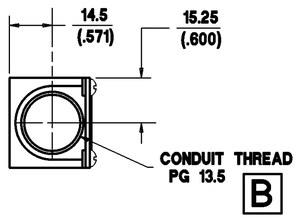

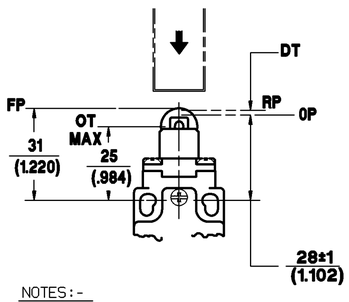

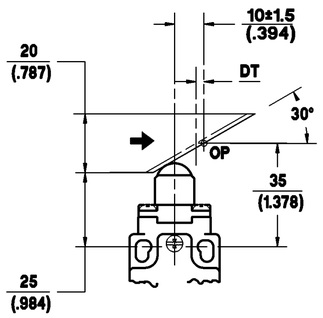

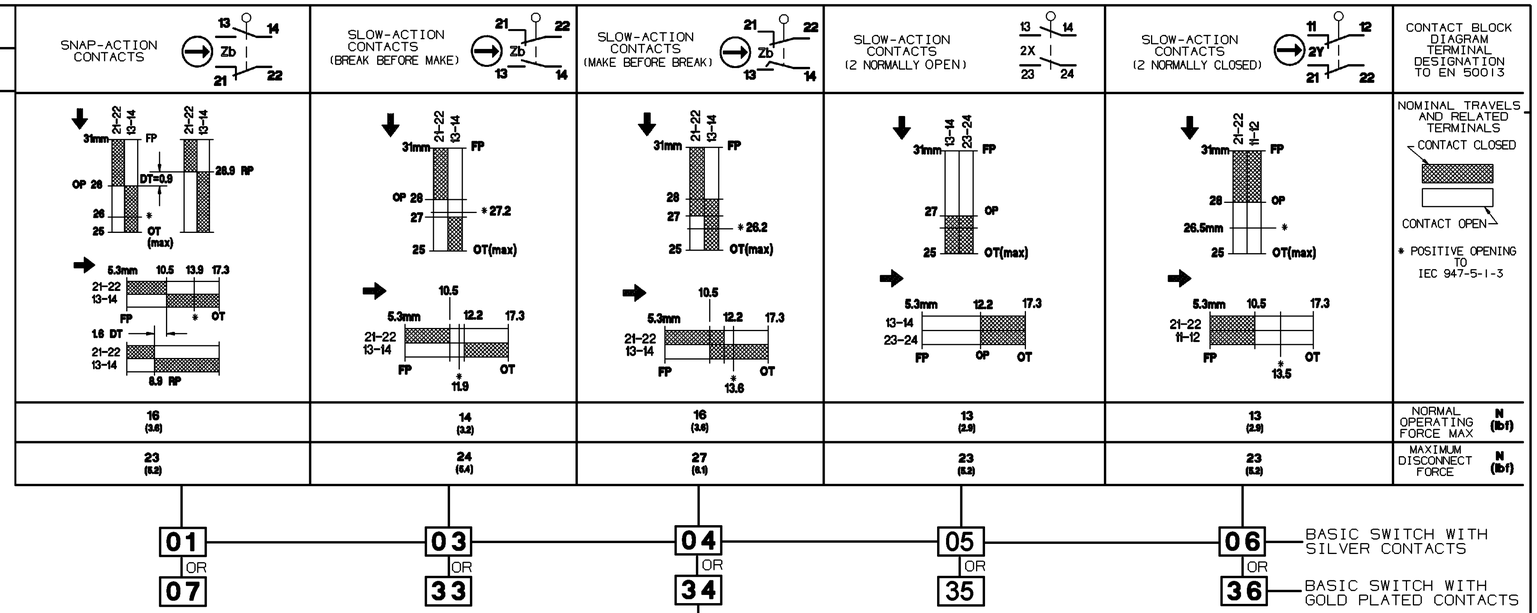

BASIC SWITCH

CONDUIT THREAD (SEE FIGS.1 & 2)

TOP ROLLER ACTUATOR (SEE FIG.1)

ROLLER ORIENTATION (SEE FIG.3)

EN50047 BODY TYPE (SEE FIG. 1) — **GLC** [X] [XX] [C] – [X] [XXXX] — MODIFICATION CODE

CONDUIT THREAD	X
1/2" NPT X 14 CONDUIT THREAD	A
PG 13.5 CONDUIT THREAD	B
M20 X 1.5 CONDUIT THREAD	C
PF 1/2 CONDUIT THREAD	D

XX
01
03
04
05
06
07
33
34
35
36

X
6

XXXX	
C021	CABLE 5 WIRE, WITH GROUND, LAST CHARACTER IS CABLE LENGTH 1 = 1MTR. CABLE LENGTHS ARE FROM 1 TO 9 METRES. ONLY AVAILABLE WITH CONDUIT THREAD TYPE 'B' .
Q01	CONNECTOR , 4 PIN MICRO. ONLY AVAILABLE WITH CONDUIT THREAD TYPE 'B' .
Q02	CONNECTOR , 5 PIN MICRO TWIN KEYWAY. ONLY AVAILABLE WITH CONDUIT THREAD TYPE 'B' .
Q03	CONNECTOR , 4 PIN MINI. ONLY AVAILABLE WITH CONDUIT THREAD TYPE 'B' .
Q04	CONNECTOR , 5 PIN MINI. ONLY AVAILABLE WITH CONDUIT THREAD TYPE 'B' .
Q07	CONNECTOR , 5 PIN MICRO. ONLY AVAILABLE WITH CONDUIT THREAD TYPE 'B' .

NOTE:-
ANY STANDARD LISTING WITH SUFFIX 'RS' OR 'FE' IS PERMITTED.

NOTES:-

1. ZINC DIECAST BODY AND HEAD WITH STEEL COVER. BODY AND COVER FINISHED IN MICRO SWITCH BLUE EPOXY PAINT. HEAD FINISHED IN BLACK EPOXY PAINT.
2. MINIMUM OPERATING VELOCITY (Vmin) = 1.0 MM/S
   MAXIMUM OPERATING VELOCITY (Vmax) = 100 MM/S
   MAXIMUM OPERATING FREQUENCY (Fmax) = 250 OPS/MIN
   (THESE LIMITS APPLY TO CAM OPERATION AS SHOWN IN THE ABOVE DIAGRAMS ONLY)
3. FREE POSITION (FP), OPERATING POINT (OP), OVERTRAVEL (OT) AND PRETRAVEL (PT) ALL TO EN50047.
4. MAXIMUM TIGHTENING TORQUE FOR FIXING SCREW = 0.5Nm (4.4in.LB)
5. STANDARD GLC TYPE LISTINGS WITH SUFFIX 'N100' INDICATES A CABLE GLAND & SEAL IS SUPPLIED WITH PRODUCT IN BOX.
6. **CABLED PRODUCTS TEMP RANGE -25°C TO 85°C -3°F TO 185°F**

NO CHANGES CAN BE MADE TO THIS DRAWING WITHOUT JOINT NEWHOUSE/FREEPORT APPROVAL

STANDARD SILVER CONTACTS		GOLD PLATED CONTACTS	ENVIRONMENTAL	APPROVALS
ELECTRICAL RATING		ELECTRICAL RATING		
AC: A300 AC15 Ue Ie	DC: Q300 DC13 Ue Ie	I_{th} = 10A	IP66 NEMA 1, 4, 12, 13	UL, CSA
VOLTS AMPS: 120 6; 240 3	VOLTS AMPS: 125 0.55; 250 0.27	1V 10µA MIN. 50V 100mA MAX.	TEMP RANGE : -40°C TO 85°C; -40°F TO 185°F (6)	
			STORAGE : -40°C TO 85°C; -40°F TO 185°F	
			SHOCK : 50G PER IEC 68-2-27	IEC 947-5-1
			VIBRATION : 10G PER IEC 68-2-6	EN50047

THE COPYRIGHT OF THIS DRAWING IS THE PROPERTY OF HONEYWELL LTD. THE DRAWING IS SUPPLIED IN CONFIDENCE AND MUST NOT BE USED FOR ANY PURPOSE OTHER THAN THAT FOR WHICH IT IS SUPPLIED.

THIRD ANGLE PROJECTION

SCALE 1:1

DIMENSIONS ARE IN MM/INCHES.

FIG. 2

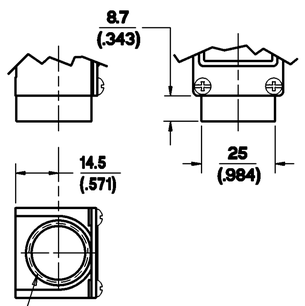

1/2" NPT X 14 CONDUIT THREAD

A

FIG. 3

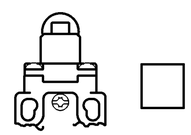

BLANK = STANDARD HEAD ORIENTATION WITH HEAD PARALLEL TO MOUNTING SURFACE

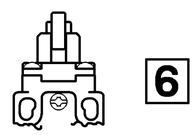

6

HEAD ORIENTATION WITH ROLLER PERPENDICULAR TO MOUNTING SURFACE

NOTE
FOR CONNECTION DIAGRAMS AND ADDITIONAL ELECTRICAL, ENVIRONMENTAL & DIMENSIONAL INFORMATION SEE DRAWING GL-49212