DRAWN	TRACED	CHECK	REVISIONS	ISSUE	DRAWING NUMBER			RELEASE No	REPLACES
R.D. 5·5·64	A.J. 9·7·64		2 AMEND R.F. (I.J.) 14·10·64 RD 11 3 ADDED B.H. (J.M.) 11·8·65 2 AMEND R.F. (I.J.) 14·9·64 RD 11 6 40064 R.M.N. (J.B.) 22·5·69 7 40744-B R.M.N. (J.M.) 9·5·75 8 R.A.L. 2.2.86 MS20440	7 8	M	BZE7-2RN2. SERIES CHART 1.		1916-042-5	

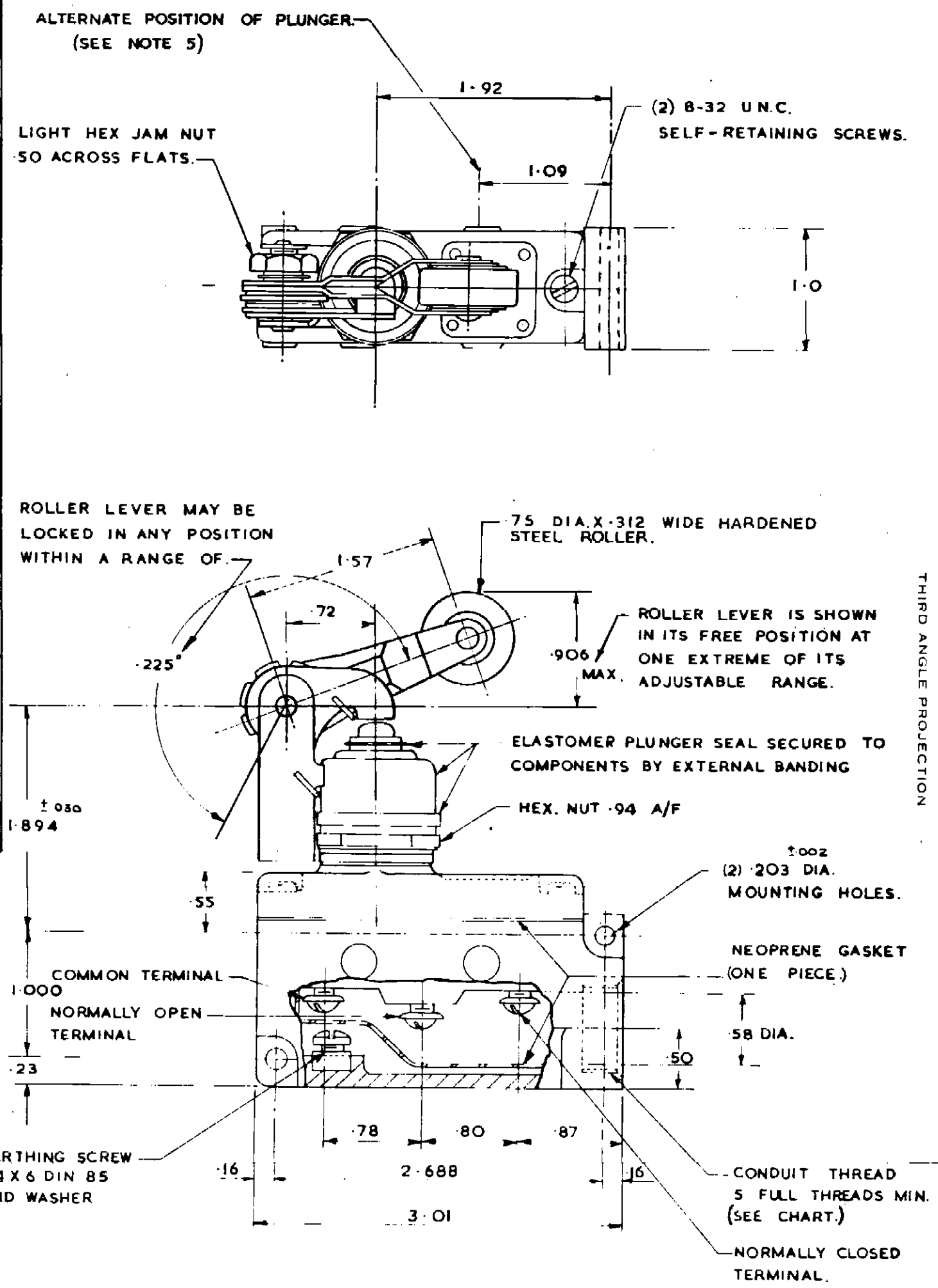

CHARACTERISTICS	
OPERATING FORCE	10 20 OZ.
DIFFERENTIAL FORCE	
RELEASE FORCE	6 OZ MIN.
PRETRAVEL	·188 MAX.
DIFFERENTIAL TRAVEL	·006 MAX.
OVERTRAVEL	·219 MIN.
FREE POSITION	
SWITCH BASIC REPLACEMENT	BZ-2RN702.

ELECTRICAL DATA	
CONTACT ARRANGEMENT	S.P.D.T.
BREAK DISTANCE	·020 MIN.
15A - 25,250 OR 480 VAC 1/2 A - 25 VDC, 1/4 A - 250 VDC	

SCALE — DO NOT SCALE PRINT

UNLESS OTHERWISE SPECIFIED DIMENSIONS ARE IN INCHES

TOLERANCES ARE: ONE PLACE (·0) ±·030; TWO PLACES (·00) ±·015; THREE PLACES (·000) ±·005; ANGLES ±1°

WEIGHT

HONEYWELL CONTROLS LTD., BRENTFORD, MIDDLESEX & NEWHOUSE, LANARKSHIRE

Honeywell MICRO

SWITCH-ENCLOSED.

CATALOGUE LISTING BZE7-2RN2. SERIES CHART 1.

THIRD ANGLE PROJECTION

NOTE

1 – ALUMINIUM ENCLOSURE FINISHED WITH GRAY PAINT.
2 – 6-32 U N C X ·219 REF. TERMINAL SCREWS AND CUPWASHERS.
3 – ROLLER LEVER BRACKET ASSEMBLY MAY BE LOCKED IN ANY POSITION AROUND AXIS OF PLUNGER.
4 – COVER, LEVER AND BASIC SWITCH MAY BE REMOVED AS A UNIT AND MOUNTED OPPOSITE HAND TO THAT SHOWN.

CATALOGUE LISTING.	ISSUE	CHECK BY	RELEASE NO.	CONDUIT THREAD	REMARKS
BZE7-2RN234-C	1		MS-20440	20MM TO BS4568	PLUNGER SEAL MATERIAL IS SILICONE RUBBER
BZE7 — 2 RN2 — P.G.	5		1916-042-5	P.G. 13,5	
BZE7 — 2RN2 — P.G. 11	4		MS-1522	P.G. 11	
BZE7 - 2RN2 - C	1		CN-40744-B	20 MM. TO BS. 4568	

FORM NO. 1611