To our customers,

Old Company Name in Catalogs and Other Documents

On April 1st, 2010, NEC Electronics Corporation merged with Renesas Technology Corporation, and Renesas Electronics Corporation took over all the business of both companies. Therefore, although the old company name remains in this document, it is a valid Renesas Electronics document. We appreciate your understanding.

Renesas Electronics website: http://www.renesas.com

April 1st, 2010
Renesas Electronics Corporation

Issued by: Renesas Electronics Corporation (http://www.renesas.com)

Send any inquiries to http://www.renesas.com/inquiry.

RENESAS

Notice

1. All information included in this document is current as of the date this document is issued. Such information, however, is subject to change without any prior notice. Before purchasing or using any Renesas Electronics products listed herein, please confirm the latest product information with a Renesas Electronics sales office. Also, please pay regular and careful attention to additional and different information to be disclosed by Renesas Electronics such as that disclosed through our website.
2. Renesas Electronics does not assume any liability for infringement of patents, copyrights, or other intellectual property rights of third parties by or arising from the use of Renesas Electronics products or technical information described in this document. No license, express, implied or otherwise, is granted hereby under any patents, copyrights or other intellectual property rights of Renesas Electronics or others.
3. You should not alter, modify, copy, or otherwise misappropriate any Renesas Electronics product, whether in whole or in part.
4. Descriptions of circuits, software and other related information in this document are provided only to illustrate the operation of semiconductor products and application examples. You are fully responsible for the incorporation of these circuits, software, and information in the design of your equipment. Renesas Electronics assumes no responsibility for any losses incurred by you or third parties arising from the use of these circuits, software, or information.
5. When exporting the products or technology described in this document, you should comply with the applicable export control laws and regulations and follow the procedures required by such laws and regulations. You should not use Renesas Electronics products or the technology described in this document for any purpose relating to military applications or use by the military, including but not limited to the development of weapons of mass destruction. Renesas Electronics products and technology may not be used for or incorporated into any products or systems whose manufacture, use, or sale is prohibited under any applicable domestic or foreign laws or regulations.
6. Renesas Electronics has used reasonable care in preparing the information included in this document, but Renesas Electronics does not warrant that such information is error free. Renesas Electronics assumes no liability whatsoever for any damages incurred by you resulting from errors in or omissions from the information included herein.
7. Renesas Electronics products are classified according to the following three quality grades: "Standard", "High Quality", and "Specific". The recommended applications for each Renesas Electronics product depends on the product's quality grade, as indicated below. You must check the quality grade of each Renesas Electronics product before using it in a particular application. You may not use any Renesas Electronics product for any application categorized as "Specific" without the prior written consent of Renesas Electronics. Further, you may not use any Renesas Electronics product for any application for which it is not intended without the prior written consent of Renesas Electronics. Renesas Electronics shall not be in any way liable for any damages or losses incurred by you or third parties arising from the use of any Renesas Electronics product for an application categorized as "Specific" or for which the product is not intended where you have failed to obtain the prior written consent of Renesas Electronics. The quality grade of each Renesas Electronics product is "Standard" unless otherwise expressly specified in a Renesas Electronics data sheets or data books, etc.

   "Standard": Computers; office equipment; communications equipment; test and measurement equipment; audio and visual equipment; home electronic appliances; machine tools; personal electronic equipment; and industrial robots.

   "High Quality": Transportation equipment (automobiles, trains, ships, etc.); traffic control systems; anti-disaster systems; anti-crime systems; safety equipment; and medical equipment not specifically designed for life support.

   "Specific": Aircraft; aerospace equipment; submersible repeaters; nuclear reactor control systems; medical equipment or systems for life support (e.g. artificial life support devices or systems), surgical implantations, or healthcare intervention (e.g. excision, etc.), and any other applications or purposes that pose a direct threat to human life.
8. You should use the Renesas Electronics products described in this document within the range specified by Renesas Electronics, especially with respect to the maximum rating, operating supply voltage range, movement power voltage range, heat radiation characteristics, installation and other product characteristics. Renesas Electronics shall have no liability for malfunctions or damages arising out of the use of Renesas Electronics products beyond such specified ranges.
9. Although Renesas Electronics endeavors to improve the quality and reliability of its products, semiconductor products have specific characteristics such as the occurrence of failure at a certain rate and malfunctions under certain use conditions. Further, Renesas Electronics products are not subject to radiation resistance design. Please be sure to implement safety measures to guard them against the possibility of physical injury, and injury or damage caused by fire in the event of the failure of a Renesas Electronics product, such as safety design for hardware and software including but not limited to redundancy, fire control and malfunction prevention, appropriate treatment for aging degradation or any other appropriate measures. Because the evaluation of microcomputer software alone is very difficult, please evaluate the safety of the final products or system manufactured by you.
10. Please contact a Renesas Electronics sales office for details as to environmental matters such as the environmental compatibility of each Renesas Electronics product. Please use Renesas Electronics products in compliance with all applicable laws and regulations that regulate the inclusion or use of controlled substances, including without limitation, the EU RoHS Directive. Renesas Electronics assumes no liability for damages or losses occurring as a result of your noncompliance with applicable laws and regulations.
11. This document may not be reproduced or duplicated, in any form, in whole or in part, without prior written consent of Renesas Electronics.
12. Please contact a Renesas Electronics sales office if you have any questions regarding the information contained in this document or Renesas Electronics products, or if you have any other inquiries.

(Note 1) "Renesas Electronics" as used in this document means Renesas Electronics Corporation and also includes its majority-owned subsidiaries.

(Note 2) "Renesas Electronics product(s)" means any product developed or manufactured by or for Renesas Electronics.

User's Manual

78K0R/Ix3

16-bit Single-Chip Microcontrollers

78K0R/IB3 : μPD78F1201, 78F1203
78K0R/IC3 : μPD78F1211, 78F1213, 78F1214, 78F1215
78K0R/ID3 : μPD78F1223, 78F1224, 78F1225
78K0R/IE3 : μPD78F1233, 78F1234, 78F1235

Document No. U19678EJ1V1UD00 (1st edition)
Date Published November 2009 NS

© NEC Electronics Corporation 2009
Printed in Japan

[MEMO]

NOTES FOR CMOS DEVICES

(1) VOLTAGE APPLICATION WAVEFORM AT INPUT PIN: Waveform distortion due to input noise or a reflected wave may cause malfunction. If the input of the CMOS device stays in the area between VIL (MAX) and VIH (MIN) due to noise, etc., the device may malfunction. Take care to prevent chattering noise from entering the device when the input level is fixed, and also in the transition period when the input level passes through the area between VIL (MAX) and VIH (MIN).

(2) HANDLING OF UNUSED INPUT PINS: Unconnected CMOS device inputs can be cause of malfunction. If an input pin is unconnected, it is possible that an internal input level may be generated due to noise, etc., causing malfunction. CMOS devices behave differently than Bipolar or NMOS devices. Input levels of CMOS devices must be fixed high or low by using pull-up or pull-down circuitry. Each unused pin should be connected to VDD or GND via a resistor if there is a possibility that it will be an output pin. All handling related to unused pins must be judged separately for each device and according to related specifications governing the device.

(3) PRECAUTION AGAINST ESD: A strong electric field, when exposed to a MOS device, can cause destruction of the gate oxide and ultimately degrade the device operation. Steps must be taken to stop generation of static electricity as much as possible, and quickly dissipate it when it has occurred. Environmental control must be adequate. When it is dry, a humidifier should be used. It is recommended to avoid using insulators that easily build up static electricity. Semiconductor devices must be stored and transported in an anti-static container, static shielding bag or conductive material. All test and measurement tools including work benches and floors should be grounded. The operator should be grounded using a wrist strap. Semiconductor devices must not be touched with bare hands. Similar precautions need to be taken for PW boards with mounted semiconductor devices.

(4) STATUS BEFORE INITIALIZATION: Power-on does not necessarily define the initial status of a MOS device. Immediately after the power source is turned ON, devices with reset functions have not yet been initialized. Hence, power-on does not guarantee output pin levels, I/O settings or contents of registers. A device is not initialized until the reset signal is received. A reset operation must be executed immediately after power-on for devices with reset functions.

(5) POWER ON/OFF SEQUENCE: In the case of a device that uses different power supplies for the internal operation and external interface, as a rule, switch on the external power supply after switching on the internal power supply. When switching the power supply off, as a rule, switch off the external power supply and then the internal power supply. Use of the reverse power on/off sequences may result in the application of an overvoltage to the internal elements of the device, causing malfunction and degradation of internal elements due to the passage of an abnormal current. The correct power on/off sequence must be judged separately for each device and according to related specifications governing the device.

(6) INPUT OF SIGNAL DURING POWER OFF STATE : Do not input signals or an I/O pull-up power supply while the device is not powered. The current injection that results from input of such a signal or I/O pull-up power supply may cause malfunction and the abnormal current that passes in the device at this time may cause degradation of internal elements. Input of signals during the power off state must be judged separately for each device and according to related specifications governing the device.

Windows and Windows NT are registered trademarks or trademarks of Microsoft Corporation in the United States and/or other countries.
PC/AT is a trademark of International Business Machines Corporation.
EEPROM is a trademark of NEC Electronics Corporation.
SuperFlash is a registered trademark of Silicon Storage Technology, Inc. in several countries including the United States and Japan.

Caution: This product uses SuperFlash® technology licensed from Silicon Storage Technology, Inc.

- The information in this document is current as of November, 2009. The information is subject to change without notice. For actual design-in, refer to the latest publications of NEC Electronics data sheets or data books, etc., for the most up-to-date specifications of NEC Electronics products. Not all products and/or types are available in every country. Please check with an NEC Electronics sales representative for availability and additional information.
- No part of this document may be copied or reproduced in any form or by any means without the prior written consent of NEC Electronics. NEC Electronics assumes no responsibility for any errors that may appear in this document.
- NEC Electronics does not assume any liability for infringement of patents, copyrights or other intellectual property rights of third parties by or arising from the use of NEC Electronics products listed in this document or any other liability arising from the use of such products. No license, express, implied or otherwise, is granted under any patents, copyrights or other intellectual property rights of NEC Electronics or others.
- Descriptions of circuits, software and other related information in this document are provided for illustrative purposes in semiconductor product operation and application examples. The incorporation of these circuits, software and information in the design of a customer's equipment shall be done under the full responsibility of the customer. NEC Electronics assumes no responsibility for any losses incurred by customers or third parties arising from the use of these circuits, software and information.
- While NEC Electronics endeavors to enhance the quality, reliability and safety of NEC Electronics products, customers agree and acknowledge that the possibility of defects thereof cannot be eliminated entirely. To minimize risks of damage to property or injury (including death) to persons arising from defects in NEC Electronics products, customers must incorporate sufficient safety measures in their design, such as redundancy, fire-containment and anti-failure features.
- NEC Electronics products are classified into the following three quality grades: "Standard", "Special" and "Specific". The "Specific" quality grade applies only to NEC Electronics products developed based on a customer-designated "quality assurance program" for a specific application. The recommended applications of an NEC Electronics product depend on its quality grade, as indicated below. Customers must check the quality grade of each NEC Electronics product before using it in a particular application.

  "Standard": Computers, office equipment, communications equipment, test and measurement equipment, audio and visual equipment, home electronic appliances, machine tools, personal electronic equipment and industrial robots.

  "Special": Transportation equipment (automobiles, trains, ships, etc.), traffic control systems, anti-disaster systems, anti-crime systems, safety equipment and medical equipment (not specifically designed for life support).

  "Specific": Aircraft, aerospace equipment, submersible repeaters, nuclear reactor control systems, life support systems and medical equipment for life support, etc.

  The quality grade of NEC Electronics products is "Standard" unless otherwise expressly specified in NEC Electronics data sheets or data books, etc. If customers wish to use NEC Electronics products in applications not intended by NEC Electronics, they must contact an NEC Electronics sales representative in advance to determine NEC Electronics' willingness to support a given application.

  (Note 1) "NEC Electronics" as used in this statement means NEC Electronics Corporation and also includes its majority-owned subsidiaries.

  (Note 2) "NEC Electronics products" means any product developed or manufactured by or for NEC Electronics (as defined above).

(M8E0909)

INTRODUCTION

Readers

This manual is intended for user engineers who wish to understand the functions of the 78K0R/Ix3 and design and develop application systems and programs for these devices. The target products are as follows.

- 78K0R/IB3: μPD78F1201, 78F1203
- 78K0R/IC3: μPD78F1211, 78F1213, 78F1214, 78F1215
- 78K0R/ID3: μPD78F1223, 78F1224, 78F1225
- 78K0R/IE3: μPD78F1233, 78F1234, 78F1235

Purpose

This manual is intended to give users an understanding of the functions described in the **Organization** below.

Organization

The 78K0R/Ix3 manual is separated into two parts: this manual and the instructions edition (common to the 78K0R Microcontroller).

78K0R/Ix3 User's Manual (This Manual)	**78K0R Microcontroller User's Manual Instructions**
• Pin functions • Internal block functions • Interrupts • Other on-chip peripheral functions • Electrical specifications	• CPU functions • Instruction set • Explanation of each instruction

How to Read This Manual

It is assumed that the readers of this manual have general knowledge of electrical engineering, logic circuits, and microcontrollers.

- To gain a general understanding of functions:
  → Read this manual in the order of the **CONTENTS**.
- How to interpret the register format:
  → For a bit number enclosed in angle brackets, the bit name is defined as a reserved word in the RA78K0R, and is defined as an sfr variable using the #pragma sfr directive in the CC78K0R.
- To know details of the 78K0R Series instructions:
  → Refer to the separate document **78K0R Microcontroller Instructions User's Manual (U17792E)**.

Conventions

Data significance:	Higher digits on the left and lower digits on the right	
Active low representations:	$\overline{\times\times\times}$ (overscore over pin and signal name)	
Note:	Footnote for item marked with **Note** in the text	
Caution:	Information requiring particular attention	
Remark:	Supplementary information	
Numerical representations:	Binary	···×××× or ××××B
	Decimal	···××××
	Hexadecimal	···××××H

Related Documents

The related documents indicated in this publication may include preliminary versions. However, preliminary versions are not marked as such.

Documents Related to Devices

Document Name	Document No.
78K0R/Ix3 User's Manual	This manual
78K0R Microcontroller Instructions User's Manual	U17792E

Documents Related to Development Tools (Software) (User's Manuals)

Document Name		Document No.
CC78K0R Ver. 2.00 C Compiler	Operation	U18549E
	Language	U18548E
RA78K0R Ver. 1.20 Assembler Package	Operation	U18547E
	Language	U18546E
SM+ System Simulator	Operation	U18601E
PM+ Ver. 6.30		U18416E
ID78K0R-QB Ver. 3.20 Integrated Debugger	Operation	U17839E

Documents Related to Development Tools (Hardware) (User's Manuals)

Document Name	Document No.
QB-MINI2 On-Chip Debug Emulator with Programming Function	U18371E
QB-78K0RIX3 In-Circuit Emulator	U19228E

Documents Related to Flash Memory Programming

Document Name	Document No.
PG-FP5 Flash Memory Programmer User's Manual	U18865E

Caution The related documents listed above are subject to change without notice. Be sure to use the latest version of each document when designing.

Other Documents

Document Name	Document No.
SEMICONDUCTOR SELECTION GUIDE – Products and Packages –	X13769X
Semiconductor Device Mount Manual	**Note**
Quality Grades on NEC Semiconductor Devices	C11531E
NEC Semiconductor Device Reliability/Quality Control System	C10983E
Guide to Prevent Damage for Semiconductor Devices by Electrostatic Discharge (ESD)	C11892E

Note See the "Semiconductor Device Mount Manual" website (http://www.necel.com/pkg/en/mount/index.html).

Caution The related documents listed above are subject to change without notice. Be sure to use the latest version of each document when designing.

CONTENTS

CHAPTER 1 OUTLINE 19

1.1 Features 20

1.2 Applications 21

1.3 Ordering Information 21

1.4 Pin Configuration (Top View) 22

1.4.1 78K0R/IB3 22

1.4.2 78K0R/IC3 23

1.4.3 78K0R/ID3 26

1.4.4 78K0R/IE3 27

1.5 Pin Identification 28

1.6 Block Diagram 29

1.6.1 78K0R/IB3 29

1.6.2 78K0R/IC3 30

1.6.3 78K0R/ID3 33

1.6.4 78K0R/IE3 34

1.7 Outline of Functions 35

CHAPTER 2 PIN FUNCTIONS 37

2.1 Pin Function List 37

2.1.1 78K0R/IB3 38

2.1.2 78K0R/IC3 41

2.1.3 78K0R/ID3 54

2.1.4 78K0R/IE3 59

2.2 Description of Pin Functions 64

2.2.1 P00, P01 (port 0) 64

2.2.2 P10 to P17 (port 1) 65

2.2.3 P20 to P27 (port 2) 66

2.2.4 P30 to P33 (port 3) 67

2.2.5 P40 to P43 (port 4) 68

2.2.6 P50 to P53 (port 5) 69

2.2.7 P60 and P61 (port 6) 70

2.2.8 P70 to P77 (port 7) 71

2.2.9 P80 to P83 (port 8) 72

2.2.10 P120 to P124 (port 12) 73

2.2.11 P140, P141 (port 14) 74

2.2.12 P150 to P153 (port 15) 75

2.2.13 AV_{REF} 75
2.2.14 AV_{SS} 75
2.2.15 $\overline{RESET}$ 75
2.2.16 REGC 76
2.2.17 V_{DD}, EV_{DD} 76
2.2.18 V_{SS}, EV_{SS} 76
2.2.19 FLMD0 77
2.3 Pin I/O Circuits and Recommended Connection of Unused Pins 78
2.3.1 78K0R/IB3 78
2.3.2 78K0R/IC3 80
2.3.3 78K0R/ID3 88
2.3.4 78K0R/IE3 91

CHAPTER 3 CPU ARCHITECTURE 97
3.1 Memory Space 97
3.1.1 Internal program memory space 103
3.1.2 Mirror area 107
3.1.3 Internal data memory space 108
3.1.4 Special function register (SFR) area 109
3.1.5 Extended special function register (2nd SFR: 2nd Special Function Register) area 109
3.1.6 Data memory addressing 110
3.2 Processor Registers 114
3.2.1 Control registers 114
3.2.2 General-purpose registers 116
3.2.3 ES and CS registers 118
3.2.4 Special function registers (SFRs) 119
3.2.5 Extended special function registers (2nd SFRs: 2nd Special Function Registers) 125
3.3 Instruction Address Addressing 132
3.3.1 Relative addressing 132
3.3.2 Immediate addressing 132
3.3.3 Table indirect addressing 133
3.3.4 Register direct addressing 134
3.4 Addressing for Processing Data Addresses 135
3.4.1 Implied addressing 135
3.4.2 Register addressing 135
3.4.3 Direct addressing 136
3.4.4 Short direct addressing 137
3.4.5 SFR addressing 138
3.4.6 Register indirect addressing 139
3.4.7 Based addressing 140

3.4.8 Based indexed addressing 143
3.4.9 Stack addressing 144

CHAPTER 4 PORT FUNCTIONS 145

4.1 Port Functions 145
4.2 Port Configuration 151
4.2.1 Port 0 153
4.2.2 Port 1 155
4.2.3 Port 2 157
4.2.4 Port 3 159
4.2.5 Port 4 163
4.2.6 Port 5 166
4.2.7 Port 6 170
4.2.8 Port 7 171
4.2.9 Port 8 179
4.2.10 Port 12 182
4.2.11 Port 14 187
4.2.12 Port 15 190
4.3 Registers Controlling Port Function 192
4.4 Port Function Operations 208
4.4.1 Writing to I/O port 208
4.4.2 Reading from I/O port 208
4.4.3 Operations on I/O port 208
4.4.4 Connecting to external device with different power potential (2.5 V, 3 V) 209
4.5 Settings of Port Mode Register and Output Latch When Using Alternate Function 211
4.6 Cautions on 1-bit Manipulation Instruction for Port Register n (Pn) 222

CHAPTER 5 CLOCK GENERATOR 223

5.1 Functions of Clock Generator 223
5.2 Configuration of Clock Generator 224
5.3 Registers Controlling Clock Generator 227
5.4 System Clock Oscillator 243
5.4.1 X1 oscillator 243
5.4.2 XT1 oscillator (products other than 78K0R/IB3) 243
5.4.3 Internal high-speed oscillator 247
5.4.4 Internal low-speed oscillator 247
5.4.5 Prescaler 247
5.5 Clock Generator Operation 248
5.6 Controlling Clock 251

5.6.1 Example of setting internal high-speed oscillator 251
5.6.2 Example of setting 40 MHz internal high-speed oscillator 251
5.6.3 Example of setting X1 oscillator 252
5.6.4 Example of setting XT1 oscillator (products other than 78K0R/IB3) 253
5.6.5 CPU clock status transition diagram 254
5.6.6 Condition before changing CPU clock and processing after changing CPU clock 262
5.6.7 Time required for switchover of CPU clock and main system clock 264
5.6.8 Conditions before clock oscillation is stopped 265

CHAPTER 6 TIMER ARRAY UNIT TAUS 266

6.1 Functions of Timer Array Unit TAUS 268
6.1.1 Independent channel operation function 268
6.1.2 Simultaneous channel operation function 269
6.1.3 LIN-bus supporting function 270
6.2 Configuration of Timer Array Unit TAUS 271
6.3 Registers Controlling Timer Array Unit TAUS 279
6.4 Basic Rules of Simultaneous Channel Operation Function 308
6.5 Channel Output (TOn pin) Control 310
6.5.1 TOn pin output circuit configuration (When the INVERTER CONTROL FUNCTIONS is not used)310
6.5.2 TOn pin output setting 311
6.5.3 Cautions on channel output operation 311
6.5.4 Collective manipulation of TOn bits 315
6.5.5 Timer interrupt and TOn pin output at operation start 316
6.6 Channel Input (TIn Pin) Control 317
6.6.1 TIn edge detection circuit 317
6.7 Operation of Timer Array Unit TAUS as Independent Channel 318
6.7.1 Operation as interval timer/square wave output 318
6.7.2 Operation as external event counter 324
6.7.3 Operation as frequency divider(44-pin and 48-pin products of 78K0R/IC3, 78K0R/ID3 and 78K0R/IE3 only.) 328
6.7.4 Operation as input pulse interval measurement 332
6.7.5 Operation as input signal high-/low-level width measurement 336
6.8 Simultaneous Channel Operation Function of Timer Array Unit TAUS 340
6.8.1 Operation as one-shot pulse output function 340
6.8.2 Operation as PWM function 347
6.8.3 Operation as multiple PWM output function 354

CHAPTER 7 INVERTER CONTROL FUNCTIONS 360

7.1 Outline of Functions 360

7.2 Configuration of Inverter Control Function 363

7.3 Registers Controlling Timer Array Unit TAUS and Inverter Control Function Block 367

7.4 Basic Rule of Real-time Output Function 383

7.5 Operation Using Inverter Control Function 385

7.5.1 Operation as real-time output function (type 1) 385

7.5.2 Operation as real-time output function (type 2) 392

7.5.3 Operation as 6-phase PWM output function 399

7.5.4 Operation as triangular wave PWM output function 406

7.5.5 Operation as triangular wave PWM output function with dead time 413

7.5.6 Operation as 6-phase triangular wave PWM output function 422

7.5.7 Interrupt signal thinning function 431

7.5.8 Operation as A/D conversion trigger output function (type 1) 437

7.5.9 Operation as A/D conversion trigger output function (type 2) 443

7.5.10 Operation as linked real-time output function (type 1) 451

7.5.11 Operation as linked real-time output function (type 2) 459

7.5.12 Operation as linked real-time output function (type 3) 467

7.5.13 Operation as non-complementary modulation output function (type 1) 476

7.5.14 Operation as non-complementary modulation output function (type 2) 487

7.5.15 Operation as complementary modulation output function 498

7.6 Overcurrent Detection Function 512

CHAPTER 8 COMPARATORS/ PROGRAMMABLE GAIN AMPLIFIERS 521

8.1 Functions of Comparator and Programmable Gain Amplifier 521

8.2 Configurations of Comparator and Programmable Gain Amplifier 525

8.3 Registers Controlling Comparators and Programmable Gain Amplifiers 525

8.4 Operations of Comparator and Programmable Gain Amplifier 533

8.4.1 Starting comparator and programmable gain amplifier operation 533

8.4.2 Stopping comparator and programmable gain amplifier operation 538

CHAPTER 9 REAL-TIME COUNTER 540

9.1 Functions of Real-Time Counter 540

9.2 Configuration of Real-Time Counter 540

9.3 Registers Controlling Real-Time Counter 542

9.4 Real-Time Counter Operation 557

9.4.1 Starting operation of real-time counter 557

9.4.2 Shifting to STOP mode after starting operation 558

9.4.3 Reading/writing real-time counter 559
9.4.4 Setting alarm of real-time counter 561

CHAPTER 10 WATCHDOG TIMER 562

10.1 Functions of Watchdog Timer 562
10.2 Configuration of Watchdog Timer 563
10.3 Register Controlling Watchdog Timer 564
10.4 Operation of Watchdog Timer 565
10.4.1 Controlling operation of watchdog timer 565
10.4.2 Setting overflow time of watchdog timer 566
10.4.3 Setting window open period of watchdog timer 567
10.4.4 Setting watchdog timer interval interrupt 568

CHAPTER 11 CLOCK OUTPUT/BUZZER OUTPUT CONTROLLER 569

11.1 Functions of Clock Output/Buzzer Output Controller 569
11.2 Configuration of Clock Output/Buzzer Output Controller 571
11.3 Registers Controlling Clock Output/Buzzer Output Controller 571
11.4 Operations of Clock Output/Buzzer Output Controller 574
11.4.1 Operation as output pin 574

CHAPTER 12 A/D CONVERTER 574

12.1 Function of A/D Converter 574
12.2 Configuration of A/D Converter 576
12.3 Registers Used in A/D Converter 578
12.4 A/D Converter Operations 590
12.4.1 Basic operations of A/D converter 590
12.4.2 Input voltage and conversion results 592
12.4.3 Trigger mode selection 593
12.4.4 A/D converter operation modes 594
12.5 How to Read A/D Converter Characteristics Table 597
12.6 Cautions for A/D Converter 599

CHAPTER 13 SERIAL ARRAY UNIT 603

13.1 Functions of Serial Array Unit 604
13.1.1 3-wire serial I/O (CSI00, CSI01, CSI10) 604
13.1.2 UART (UART0, UART1) 605
13.1.3 Simplified I^2C (IIC10) 606
13.2 Configuration of Serial Array Unit 607
13.3 Registers Controlling Serial Array Unit 613

13.4 Operation stop mode 637
13.4.1 Stopping the operation by units 638
13.4.2 Stopping the operation by channels 639
13.5 Operation of 3-Wire Serial I/O (CSI00, CSI01, CSI10) Communication 639
13.5.1 Master transmission 640
13.5.2 Master reception 650
13.5.3 Master transmission/reception 660
13.5.4 Slave transmission 670
13.5.5 Slave reception 680
13.5.6 Slave transmission/reception 687
13.5.7 Calculating transfer clock frequency 698
13.5.8 Procedure for processing errors that occurred during 3-wire serial I/O (CSI00, CSI01, CSI10) communication 700
13.6 Operation of UART (UART0, UART1) Communication 699
13.6.1 UART transmission 700
13.6.2 UART reception 710
13.6.3 LIN transmission 717
13.6.4 LIN reception 720
13.6.5 Calculating baud rate 727
13.6.6 Procedure for processing errors that occurred during UART (UART0, UART1) communication ... 731
13.7 Operation of Simplified I²C (IIC10) Communication 732
13.7.1 Address field transmission 733
13.7.2 Data transmission 739
13.7.3 Data reception 743
13.7.4 Stop condition generation 748
13.7.5 Calculating transfer rate 749
13.7.6 Procedure for processing errors that occurred during simplified I²C (IIC10) communication 752
13.8 Relationship Between Register Settings and Pins 753
13.8.1 Relationship Between Register Settings and Pins of Channel 0 753
13.8.2 Relationship Between Register Settings and Pins of Channel 1 755
13.8.3 Relationship Between Register Settings and Pins of Channel 2 757
13.8.4 Relationship Between Register Settings and Pins of Channel 3 760

CHAPTER 14 SERIAL INTERFACE IICA 760

14.1 Functions of Serial Interface IICA 760
14.2 Configuration of Serial Interface IICA 763
14.3 Registers Controlling Serial Interface IICA 766
14.4 I²C Bus Mode Functions 780
14.4.1 Pin configuration 780
14.4.2 Setting transfer clock by using IICWL and IICWH registers 781

14.5 I²C Bus Definitions and Control Methods 782
14.5.1 Start conditions 782
14.5.2 Addresses 783
14.5.3 Transfer direction specification 783
14.5.4 Acknowledge ($\overline{ACK}$) 784
14.5.5 Stop condition 785
14.5.6 Wait 786
14.5.7 Canceling wait 788
14.5.8 Interrupt request (INTIICA) generation timing and wait control 789
14.5.9 Address match detection method 790
14.5.10 Error detection 790
14.5.11 Extension code 790
14.5.12 Arbitration 791
14.5.13 Wakeup function 793
14.5.14 Communication reservation 796
14.5.15 Cautions 800
14.5.16 Communication operations 801
14.5.17 Timing of I²C interrupt request (INTIICA) occurrence 809
14.6 Timing Charts 830

CHAPTER 15 MULTIPLIER/DIVIDER 837

15.1 Functions of Multiplier/Divider 837
15.2 Configuration of Multiplier/Divider 837
15.3 Register Controlling Multiplier/Divider 842
15.4 Operations of Multiplier/Divider 843
15.4.1 Multiplication operation 843
15.4.2 Division operation 844

CHAPTER 16 DMA CONTROLLER 846

16.1 Functions of DMA Controller 846
16.2 Configuration of DMA Controller 847
16.3 Registers to Controlling DMA Controller 850
16.4 Operation of DMA Controller 853
16.4.1 Operation procedure 853
16.4.2 Transfer mode 854
16.4.3 Termination of DMA transfer 854
16.5 Example of Setting of DMA Controller 855
16.5.1 CSI consecutive transmission 855
16.5.2 Consecutive capturing of A/D conversion results 857

16.5.3 UART consecutive reception + ACK transmission 859
16.5.4 Holding DMA transfer pending by DWAITn 861
16.5.5 Forced termination by software 862
16.6 Cautions on Using DMA Controller 864

CHAPTER 17 INTERRUPT FUNCTIONS 866

17.1 Interrupt Function Types 866
17.2 Interrupt Sources and Configuration 866
17.3 Registers Controlling Interrupt Functions 873
17.4 Interrupt Servicing Operations 890
17.4.1 Maskable interrupt acknowledgment 890
17.4.2 Software interrupt request acknowledgment 893
17.4.3 Multiple interrupt servicing 893
17.4.4 Interrupt request hold 897

CHAPTER 18 STANDBY FUNCTION 895

18.1 Standby Function and Configuration 895
18.1.1 Standby function 895
18.1.2 Registers controlling standby function 896
18.2 Standby Function Operation 900
18.2.1 HALT mode 900
18.2.2 STOP mode 906

CHAPTER 19 RESET FUNCTION 911

19.1 Register for Confirming Reset Source 921

CHAPTER 20 POWER-ON-CLEAR CIRCUIT 922

20.1 Functions of Power-on-Clear Circuit 922
20.2 Configuration of Power-on-Clear Circuit 923
20.3 Operation of Power-on-Clear Circuit 923
20.4 Cautions for Power-on-Clear Circuit 925

CHAPTER 21 LOW-VOLTAGE DETECTOR 927

21.1 Functions of Low-Voltage Detector 927
21.2 Configuration of Low-Voltage Detector 928
21.3 Registers Controlling Low-Voltage Detector 928
21.4 Operation of Low-Voltage Detector 932
21.4.1 When used as reset 932
21.4.2 When used as interrupt 937

21.5 Cautions for Low-Voltage Detector 941

CHAPTER 22 REGULATOR 945

22.1 Regulator Overview 945
22.2 Registers Controlling Regulator 945

CHAPTER 23 OPTION BYTE 947

23.1 Functions of Option Bytes 947
23.1.1 User option byte (000C0H to 000C2H/010C0H to 010C2H) 947
23.1.2 On-chip debug option byte (000C3H/ 010C3H) 948
23.2 Format of User Option Byte 948
23.3 Format of On-chip Debug Option Byte 950
23.4 Setting of Option Byte 951

CHAPTER 24 FLASH MEMORY 952

24.1 Writing with Flash Memory Programmer 952
24.2 Programming Environment 960
24.3 Communication Mode 960
24.4 Connection of Pins on Board 961
24.4.1 FLMD0 pin 961
24.4.2 TOOL0 pin 962
24.4.3 $\overline{\text{RESET}}$ pin 962
24.4.4 Port pins 963
24.4.5 REGC pin 963
24.4.6 X1 and X2 pins 963
24.4.7 Power supply 963
24.5 Registers that Control Flash Memory 963
24.6 Programming Method 964
24.6.1 Controlling flash memory 964
24.6.2 Flash memory programming mode 964
24.6.3 Selecting communication mode 965
24.6.4 Communication commands 965
24.7 Security Settings 967
24.8 Flash Memory Programming by Self-Programming 969
24.8.1 Boot swap function 971
24.8.2 Flash shield window function 973

CHAPTER 25 ON-CHIP DEBUG FUNCTION **974**

25.1 Connecting QB-MINI2 to 78K0R/Ix3 ..... **974**
25.2 On-Chip Debug Security ID **975**
25.3 Securing of User Resources **975**

CHAPTER 26 BCD CORRECTION CIRCUIT **977**

26.1 BCD Correction Circuit Function **977**
26.2 Registers Used by BCD Correction Circuit **977**
26.3 BCD Correction Circuit Operation **978**

CHAPTER 27 INSTRUCTION SET **980**

27.1 Conventions Used in Operation List **981**
27.1.1 Operand identifiers and specification methods 981
27.1.2 Description of operation column 982
27.1.3 Description of flag operation column 983
27.1.4 PREFIX instruction 983
27.2 Operation List **984**

CHAPTER 28 ELECTRICAL SPECIFICATIONS **1001**

CHAPTER 29 PACKAGE DRAWINGS **1049**

29.1 78K0R/IB3 ..... **1049**
29.2 78K0R/IC3 ..... **1050**
29.3 78K0R/ID3 ..... **1053**
29.4 78K0R/IE3 ..... **1054**

APPENDIX A DEVELOPMENT TOOLS **1056**

A.1 Software Package **1059**
A.2 Language Processing Software **1059**
A.3 Control Software **1060**
A.4 Flash Memory Programming Tools **1060**
A.4.1 When using flash memory programmers PG-FP5 and FL-PR5 1060
A.4.2 When using on-chip debug emulator with programming function QB-MINI2 1061
A.5 Debugging Tools (Hardware) **1062**
A.5.1 When using in-circuit emulator QB-78K0RIX3 1062
A.5.2 When using on-chip debug emulator with programming function QB-MINI2 1064
A.6 Debugging Tools (Software) **1064**

CHAPTER 1 OUTLINE

The 78K0R/Ix3 is a 16-bit single-chip microcontroller that uses a 78K0R CPU core and incorporates peripheral functions, such as ROM/RAM, a multi-function timer, a multi-function serial interface, an A/D converter, a programmable gain amplifier (PGA), a comparator, a real-time counter, and a watchdog timer.

This product has been developed for inverter control applications that are enabled to control system easily by using one chip. The 78K0R/Ix3 includes a multifunction timer (timer array unit TAUS) that can generate various PWM schemes to enable use in a variety of sets and that operates at a maximum resolution of 40 MHz. This timer is provided with several functions, such as a PWM (complementary PWM × 2 channels) output function with dead time, a 6-phase PWM output function with dead time, and a DC inverter real-time output function. The timer can also perform inverter control. The 78K0R/Ix3 also incorporates a fail-safe function whereby the multi-function timer links with a comparator to set the PWM output pins (TO02 to TO07) to high impedance.

Moreover, because the 78K0R/Ix3 includes an internal high-speed oscillator (CPU clock: 20 MHz, timer: 40 MHz), it can be used with confidence in applications in which the resonator might come loose.

The 78K0R/Ix3 provides high cost performance in various situations.

Remark The functions mounted depend on the product. See **1.6 Block Diagram** and **1.7 Outline of Functions**.

1.1 Features

- Minimum instruction execution time can be changed from high speed (0.05 μs: @ 20 MHz operation with high-speed system clock) to ultra low-speed (61 μs: @ 32.768 kHz operation with subsystem clock)
- General-purpose register: 8 bits × 32 registers (8 bits × 8 registers × 4 banks)
- ROM, RAM capacities

Flash ROM	RAM	78K0R/IB3	78K0R/IC3			78K0R/ID3	78K0R/IE3
		30-pin	38-pin	44-pin	48-pin	52-pin	64-pin
64 KB	3 KB Note	–	–	–	μPD78F1215	μPD78F1225	μPD78F1235
48 KB	2 KB	–	–	–	μPD78F1214	μPD78F1224	μPD78F1234
32 KB	1.5 KB	μPD78F1203	μPD78F1213	μPD78F1213	μPD78F1213	μPD78F1223	μPD78F1233
16 KB	1 KB	μPD78F1201	μPD78F1211	μPD78F1211	–	–	–

Note This is 2 KB when the self-programming function is used.

- On-chip internal high-speed oscillation clocks
  - 40 MHz internal high-speed oscillation clock: 40 MHz (TYP.) (TIMER ARRAY UNIT)
    : 20 MHz (TYP.) (Peripheral functions other than CPU and TIMER ARRAY UNIT)
  - 8 MHz internal high-speed oscillation clock: 8 MHz (TYP.)
- On-chip single-power-supply flash memory (with prohibition of chip erase/block erase/writing function)
- Self-programming (with boot swap function/flash shield window function)
- On-chip debug function
- On-chip power-on-clear (POC) circuit and low-voltage detector (LVI)
- On-chip watchdog timer (operable with the dedicated internal low-speed oscillation clock)
- On-chip multiplier/divider (16 bits × 16 bits, 32 bits ÷ 32 bits)
- On-chip clock output/buzzer output controller
- On-chip BCD adjustment
- I/O ports: 23 to 55 (N-ch open drain: 2)
- Timer
  - 16-bit timer
  - Watchdog timer
  - Real-time counter
  - On-chip motor control option unit
- On-chip comparator/programmable gain amplifier function
- Serial interface
  - CSI
  - UART/UART (LIN-bus supported)
  - Simplified I^2C
  - I^2C
- 10-bit resolution A/D converter (AV_{REF} = 2.7 to 5.5 V): 6 to 12 channels
- Power supply voltage: V_{DD} = 2.7 to 5.5 V
- Operating ambient temperature: T_A = –40 to +85°C

Remark The functions mounted depend on the product. See **1.6 Block Diagram** and **1.7 Outline of Functions**.

1.2 Applications

○ Home appliances
- Air cleaners
- Air conditioners
- Refrigerators
- Dishwashers

○ Electric bicycles

1.3 Ordering Information

- **Flash memory version (lead-free product)**

78K0R/Ix3 Microcontroller	Package	Part Number
78K0R/IB3	30-pin plastic SSOP (7.62 mm (300))	μPD78F1201MC-CAB-AX, 78F1203MC-CAB-AX
78K0R/IC3	38-pin plastic SSOP (7.62 mm (300))	μPD78F1211MC-GAA-AX, 78F1213MC-GAA-AX
	44-pin plastic LQFP (10 × 10)	μPD78F1211GB-GAF-AX, 78F1213GB-GAF-AX
	48-pin plastic TQFP (fine pitch) (7 × 7)	μPD78F1213GA-HAA-AX, 78F1214GA-HAA-AX, 78F1215GA-HAA-AX
78K0R/ID3	52-pin plastic LQFP (10 × 10)	μPD78F1223GB-GAG-AX, 78F1224GB-GAG-AX, 78F1225GB-GAG-AX
78K0R/IE3	64-pin plastic LQFP (12 × 12)	μPD78F1233GK-GAJ-AX, 78F1234GK-GAJ-AX, 78F1235GK-GAJ-AX
	64-pin plastic LQFP (fine pitch) (10 × 10)	μPD78F1233GB-GAH-AX, 78F1234GB-GAH-AX, 78F1235GB-GAH-AX

Caution The 78K0R/Ix3 has an on-chip debug function, which is provided for development and evaluation. Do not use the on-chip debug function in products designated for mass production, because the guaranteed number of rewritable times of the flash memory may be exceeded when this function is used, and product reliability therefore cannot be guaranteed. NEC Electronics is not liable for problems occurring when the on-chip debug function is used.

1.4 Pin Configuration (Top View)

1.4.1 78K0R/IB3

- 30-pin plastic SSOP (7.62 mm (300))

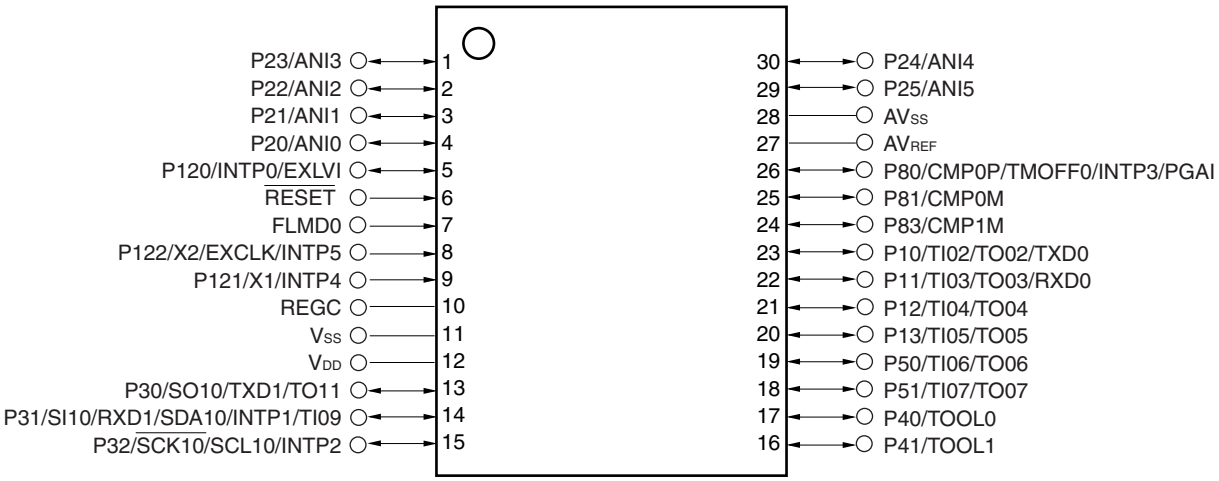

Cautions 1. Make AVSS the same potential as VSS.

2. Connect the REGC pin to VSS via a capacitor (0.47 to 1 μF).

3. P20/ANI0 to P25/ANI5 are set as analog inputs in the order of P25/ANI5, P24/ANI4, …, P20/ANI0 by the A/D port configuration register (ADPC). When using P20/ANI0 to P25/ANI5 as analog inputs, start designing from P25/ANI5 (see 12.3 (7) A/D port configuration register (ADPC) for details).

Remark For pin identification, see **1.5 Pin Identification**.

1.4.2 78K0R/IC3

- 38-pin plastic SSOP (7.62 mm (300))

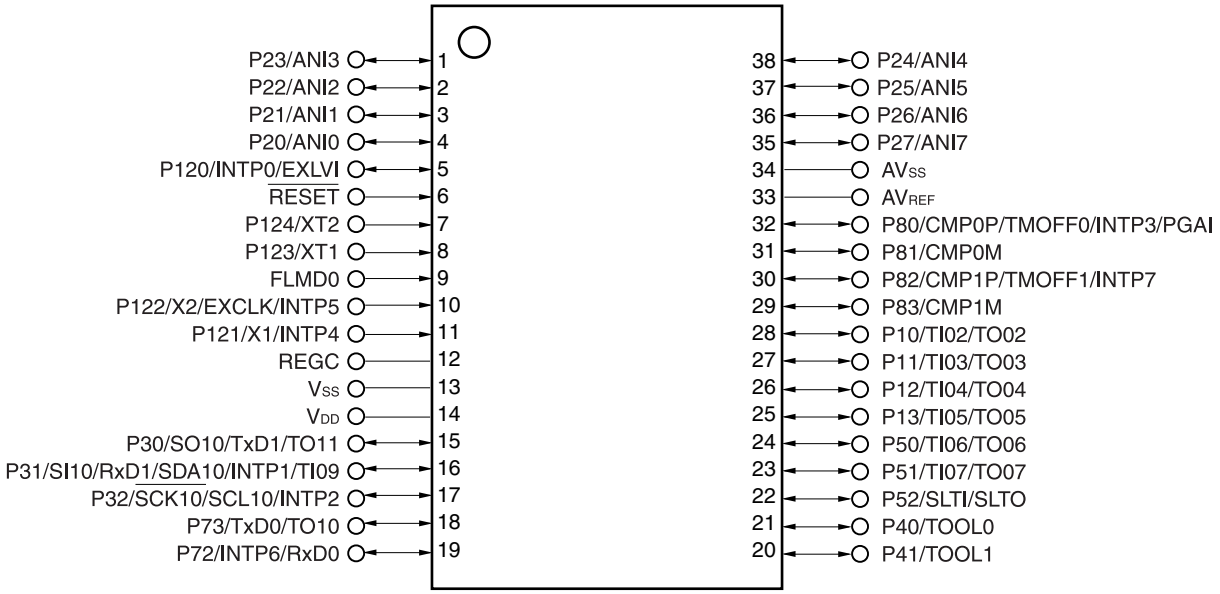

Cautions 1. Make AVSS the same potential as VSS.

2. Connect the REGC pin to VSS via a capacitor (0.47 to 1 μF).

3. P20/ANI0 to P27/ANI7 are set as analog inputs in the order of P27/ANI7 and P26/ANI6, …, P20/ANI0 by the A/D port configuration register (ADPC). When using P20/ANI0 to P27/ANI7 as analog inputs, start designing from P127/ANI7 (see 12.3 (7) A/D port configuration register (ADPC) for details).

Remark For pin identification, see **1.5 Pin Identification**.

- 44-pin plastic LQFP (10 × 10)

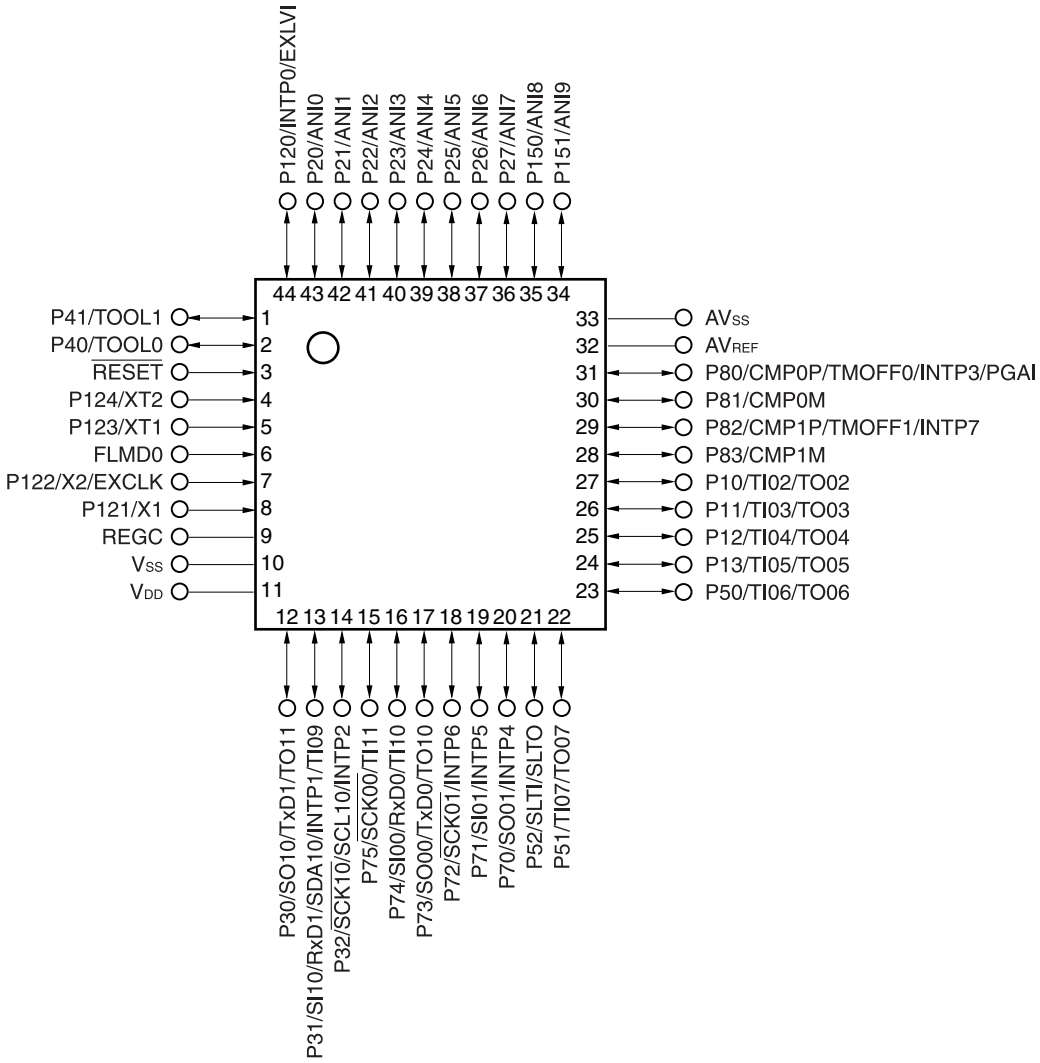

Cautions 1. Make AVSS the same potential as VSS.

2. Connect the REGC pin to VSS via a capacitor (0.47 to 1 μF).

3. P20/ANI0 to P27/ANI7, P150/ANI8 and P151/ANI9 are set as analog inputs in the order of P151/ANI9, P150/ANI8 and P27/ANI7, …, P20/ANI0 by the A/D port configuration register (ADPC). When using P20/ANI0 to P27/ANI7, P150/ANI8 and P151/ANI9 as analog inputs, start designing from P151/ANI9 (see 12.3 (7) A/D port configuration register (ADPC) for details).

Remark For pin identification, see **1.5 Pin Identification**.

- 48-pin plastic TQFP (fine pitch) (7 × 7)

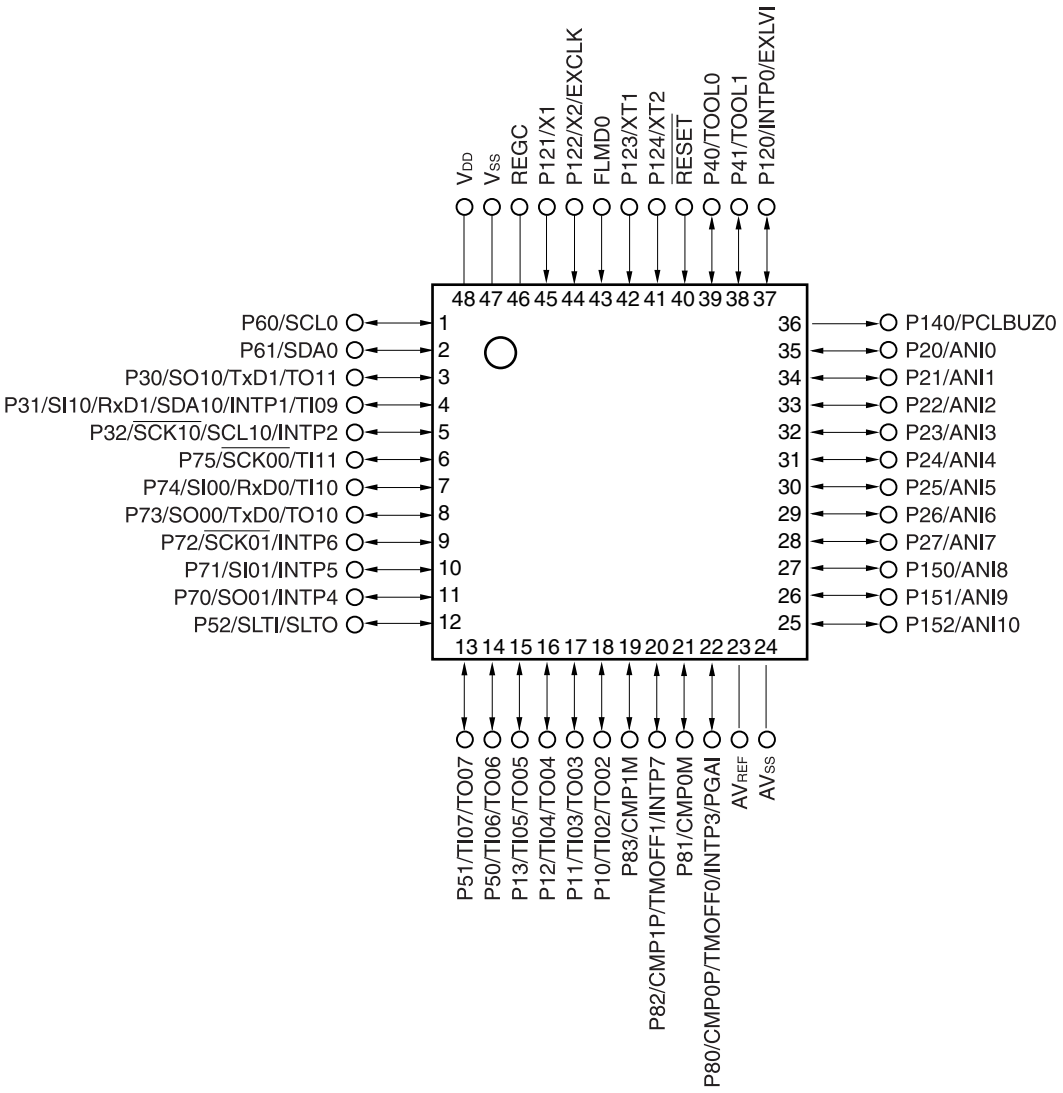

Cautions 1. Make AVSS the same potential as VSS.

2. Connect the REGC pin to VSS via a capacitor (0.47 to 1 μF).

3. P20/ANI0 to P27/ANI7 and P150/ANI8 to P152/ANI10 are set as analog inputs in the order of P152/ANI10 to P150/ANI8 and P27/ANI7, …, P20/ANI0 by the A/D port configuration register (ADPC). When using P20/ANI0 to P27/ANI7 and P150/ANI8 to P152/ANI10 as analog inputs, start designing from P152/ANI10 (see 12.3 (7) A/D port configuration register (ADPC) for details).

Remark For pin identification, see **1.5 Pin Identification**.

1.4.3 78K0R/ID3

- 52-pin plastic LQFP (10 × 10)

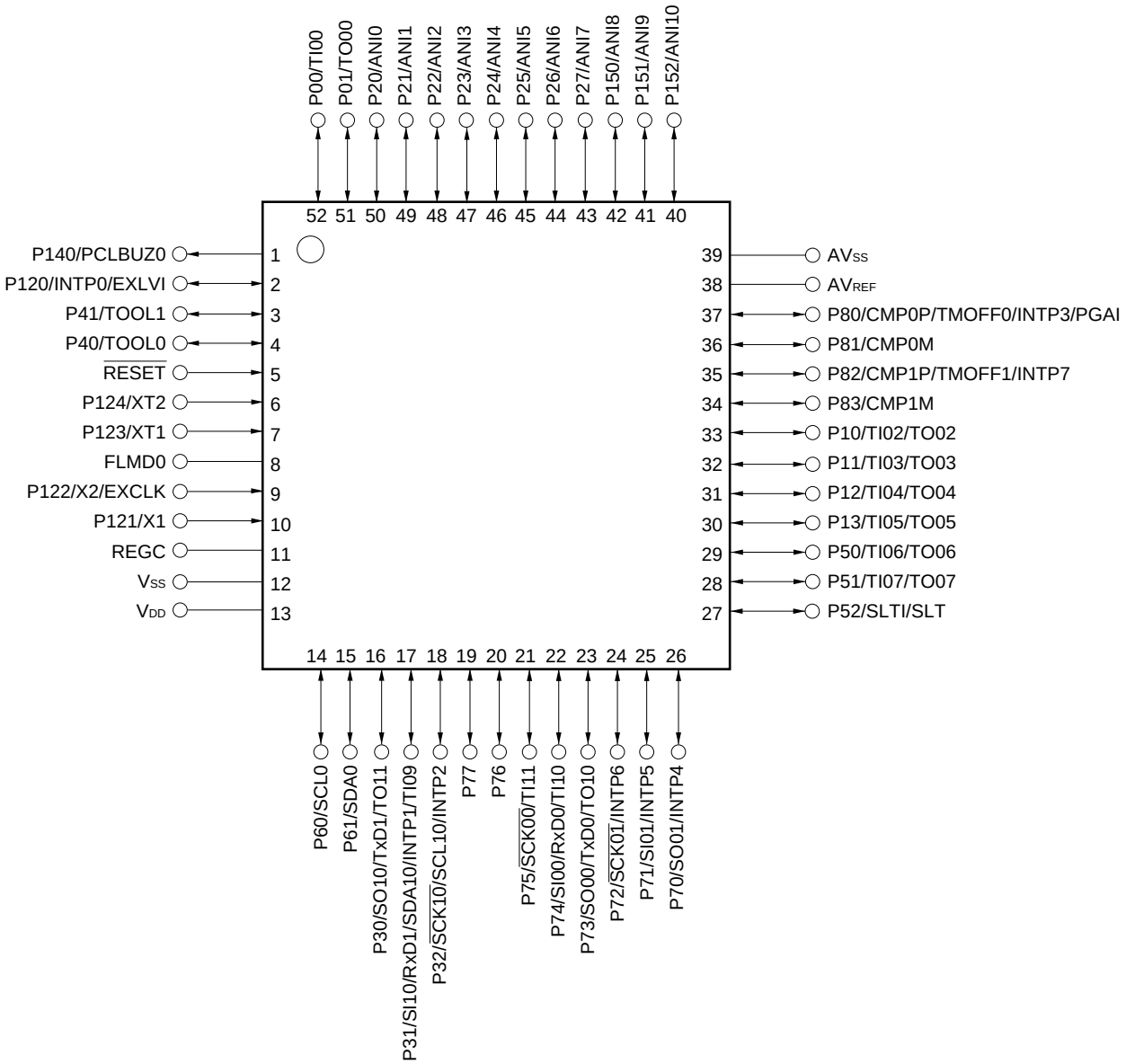

Cautions 1. Make AVSS the same potential as VSS.

2. Connect the REGC pin to VSS via a capacitor (0.47 to 1 μF).

3. P20/ANI0 to P27/ANI7 and P150/ANI8 to P152/ANI10 are set as analog inputs in the order of P152/ANI10 to P150/ANI8 and P27/ANI7, …, P20/ANI0 by the A/D port configuration register (ADPC). When using P20/ANI0 to P27/ANI7 and P150/ANI8 to P152/ANI10 as analog inputs, start designing from P152/ANI10 (see 12.3 (7) A/D port configuration register (ADPC) for details).

Remark For pin identification, see **1.5 Pin Identification**.

1.4.4 78K0R/IE3

- 64-pin plastic LQFP (12 × 12)
- 64-pin plastic LQFP (fine pitch) (10 × 10)

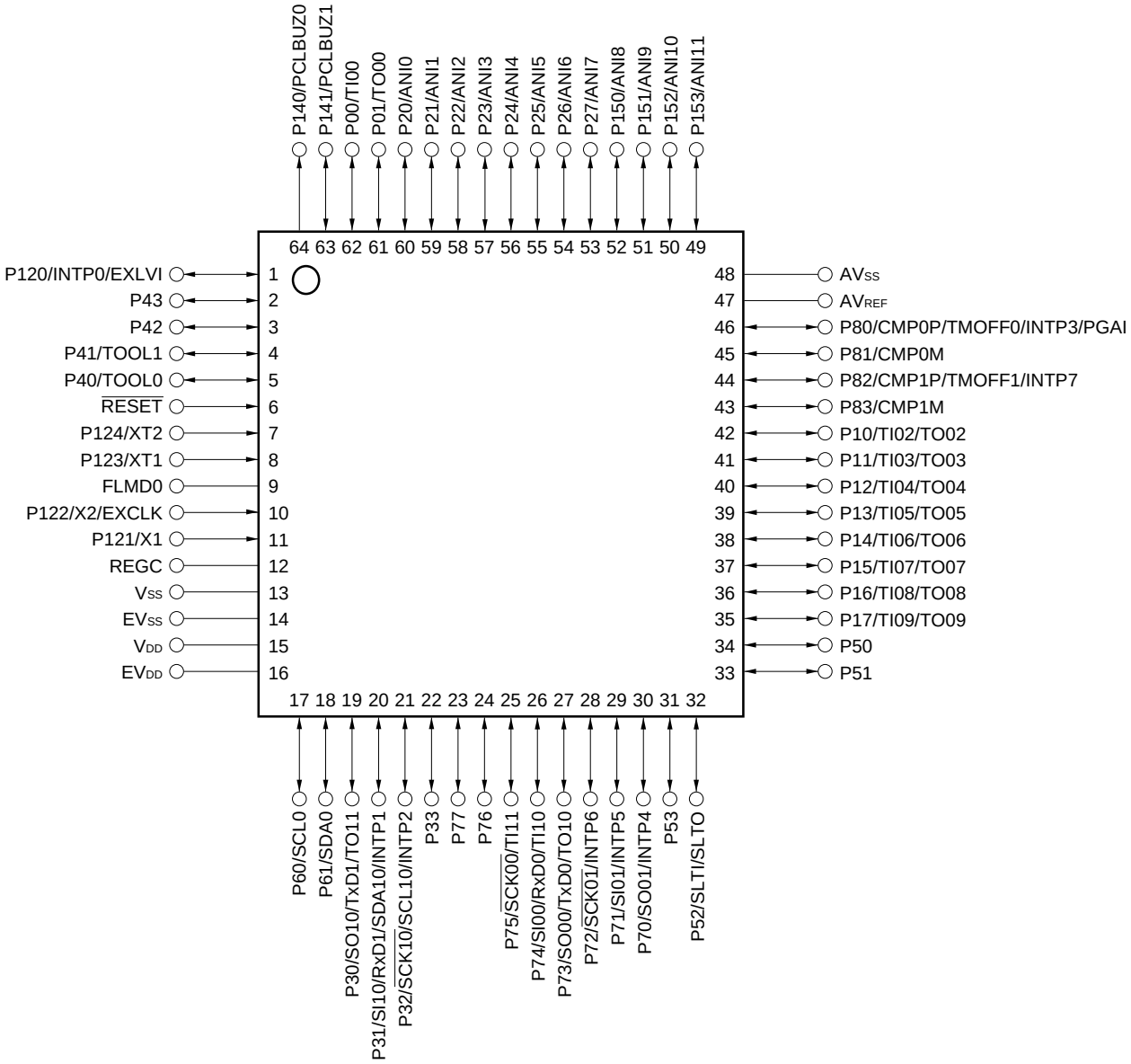

Cautions 1. Make AVSS and EVSS the same potential as VSS.

2. Make EVDD and VDD the same potential as VDD.

3. Connect the REGC pin to VSS via a capacitor (0.47 to 1 μF).

4. P20/ANI0 to P27/ANI7 and P150/ANI8 to P153/ANI11 are set as analog inputs in the order of P153/ANI11, …, P150/ANI8, P27/ANI7, …, P20/ANI0 by the A/D port configuration register (ADPC). When using P20/ANI0 to P27/ANI7 and P150/ANI8 to P153/ANI11 as analog inputs, start designing from P153/ANI11 (see 12.3 (7) A/D port configuration register (ADPC) for details).

Remark For pin identification, see **1.5 Pin Identification**.

1.5 Pin Identification

ANI0 to ANI11:	Analog Input
AV_{REF}:	Analog Reference Voltage
AV_{SS}:	Analog Ground
CMP0M, CMP1M:	Comparator Input (Minus)
CMP0P, CMP1P:	Comparator Input (Plus)
EV_{DD}:	Power Supply for Port
EV_{SS}:	Ground for Port
EXCLK:	External Clock Input (Main System Clock)
EXLVI:	External potential Input for Low-voltage detector
FLMD0:	Flash Programming Mode
INTP0 to INTP7:	External Interrupt Input
P00, P01:	Port 0
P10 to P17:	Port 1
P20 to P27:	Port 2
P30 to P33:	Port 3
P40 to P43:	Port 4
P50 to P53:	Port 5
P60, P61:	Port 6
P70 to P77:	Port 7
P80 to P83:	Port 8
P120 to P124:	Port 12
P140, P141:	Port 14
P150 to P153:	Port 15
PCLBUZ0, PCLBUZ1:	Programmable Clock Output/ Buzzer Output
PGAI:	Programmable Gain Amplifier Input
REGC:	Regulator Capacitance
$\overline{RESET}$:	Reset
RxD0, RxD1:	Receive Data
$\overline{SCK00}$, $\overline{SCK01}$, $\overline{SCK10}$:	Serial Clock Input/Output
SCL0, SCL10:	Serial Clock Input/Output
SDA0, SDA10:	Serial Data Input/Output
SI00, SI01, SI10:	Serial Data Input
SLTI:	Selectable Timer Input
SLTO:	Selectable Timer Output
SO00, SO01, SO10:	Serial Data Output
TI00, TI02 to TI11:	Timer Input
TMOFF0, TMOFF1:	Timer Hi-Z control Input
TO00, TO02 to TO11:	Timer Output
TOOL0:	Data Input/Output for Tool
TOOL1:	Clock Output for Tool
TxD0, TxD1:	Transmit Data
V_{DD}:	Power Supply
V_{SS}:	Ground
X1, X2:	Crystal Oscillator (Main System Clock)
XT1, XT2:	Crystal Oscillator (Subsystem Clock)

1.6 Block Diagram

1.6.1 78K0R/IB3

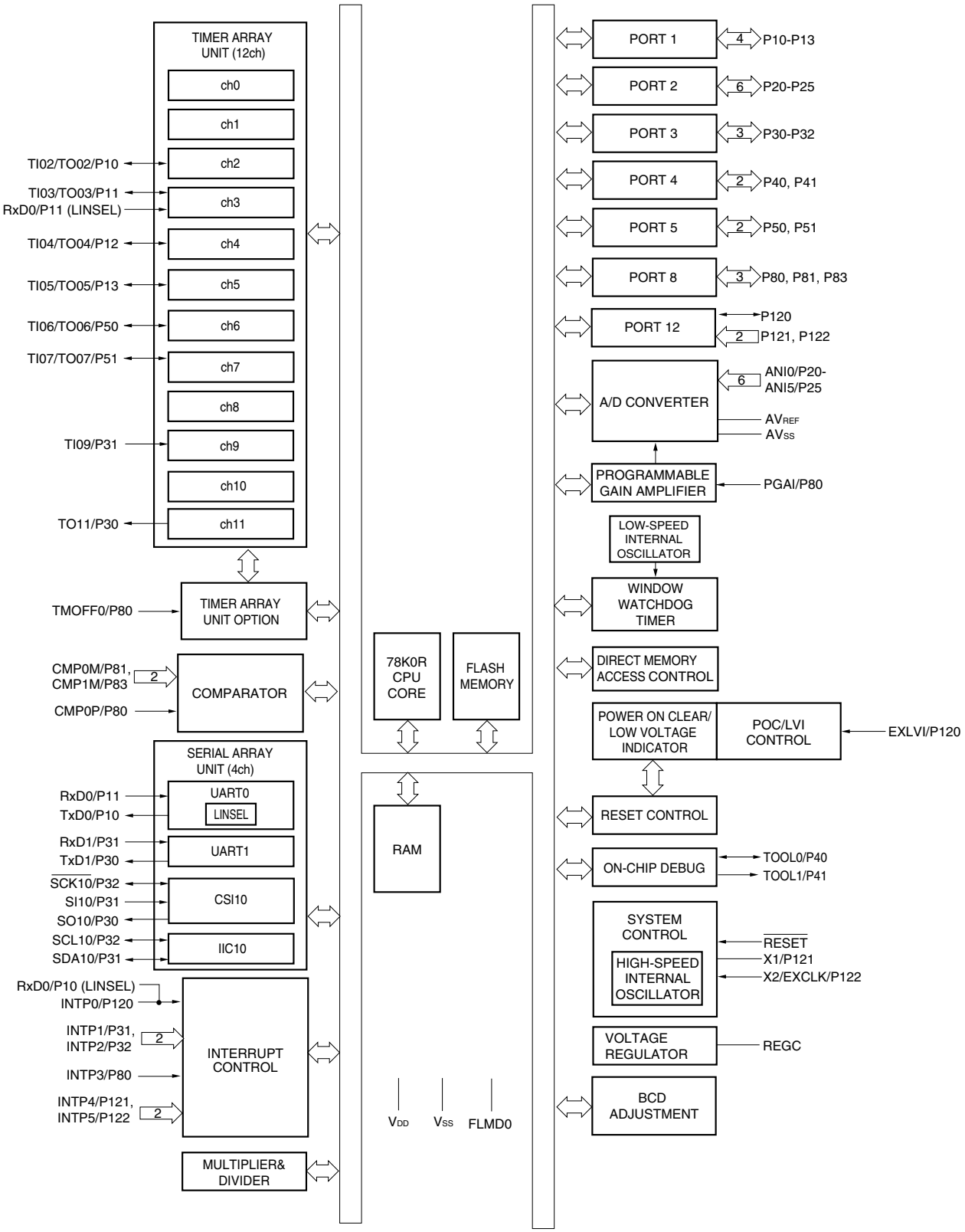

1.6.2 78K0R/IC3

- 38-pin products

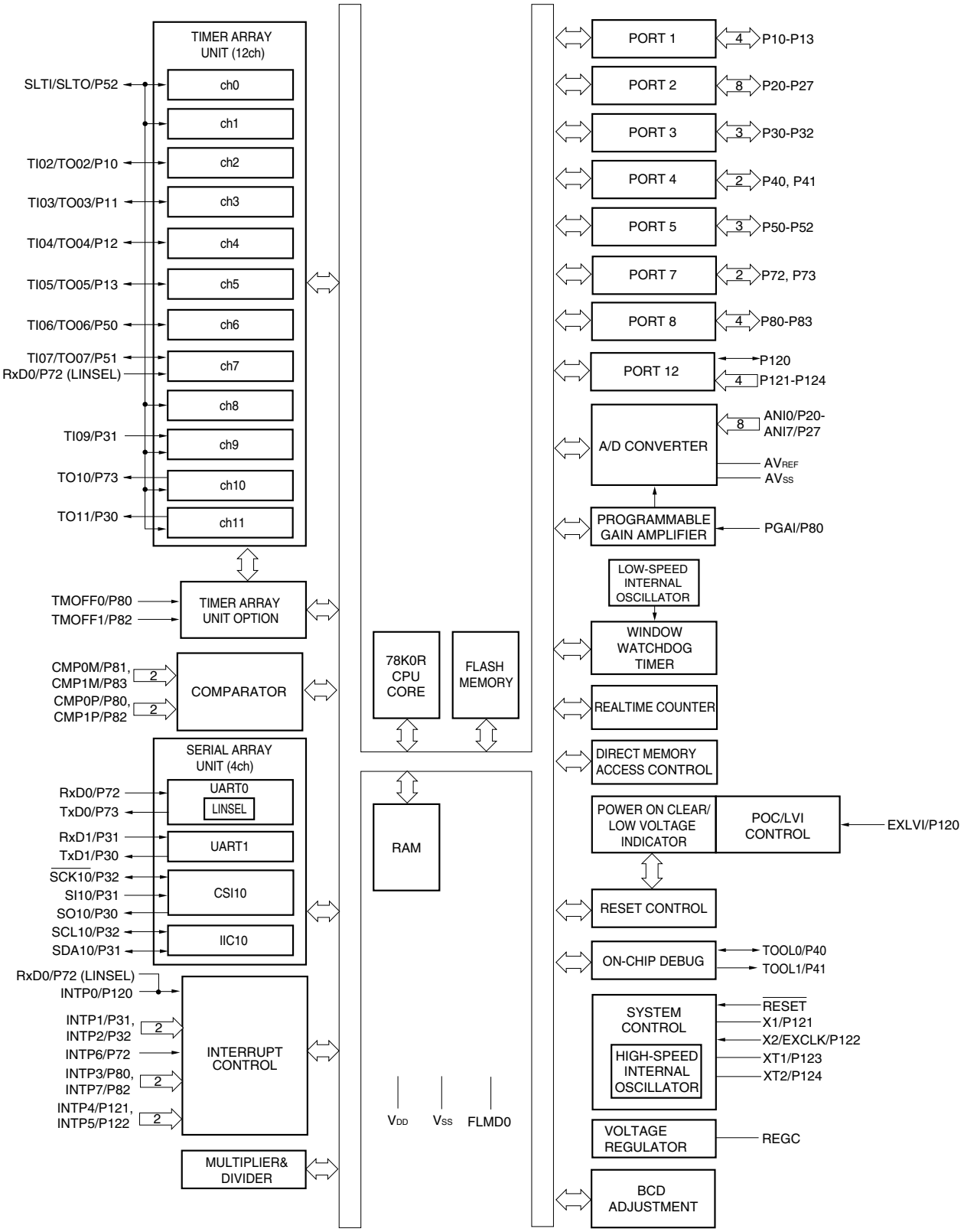

- 44-pin products

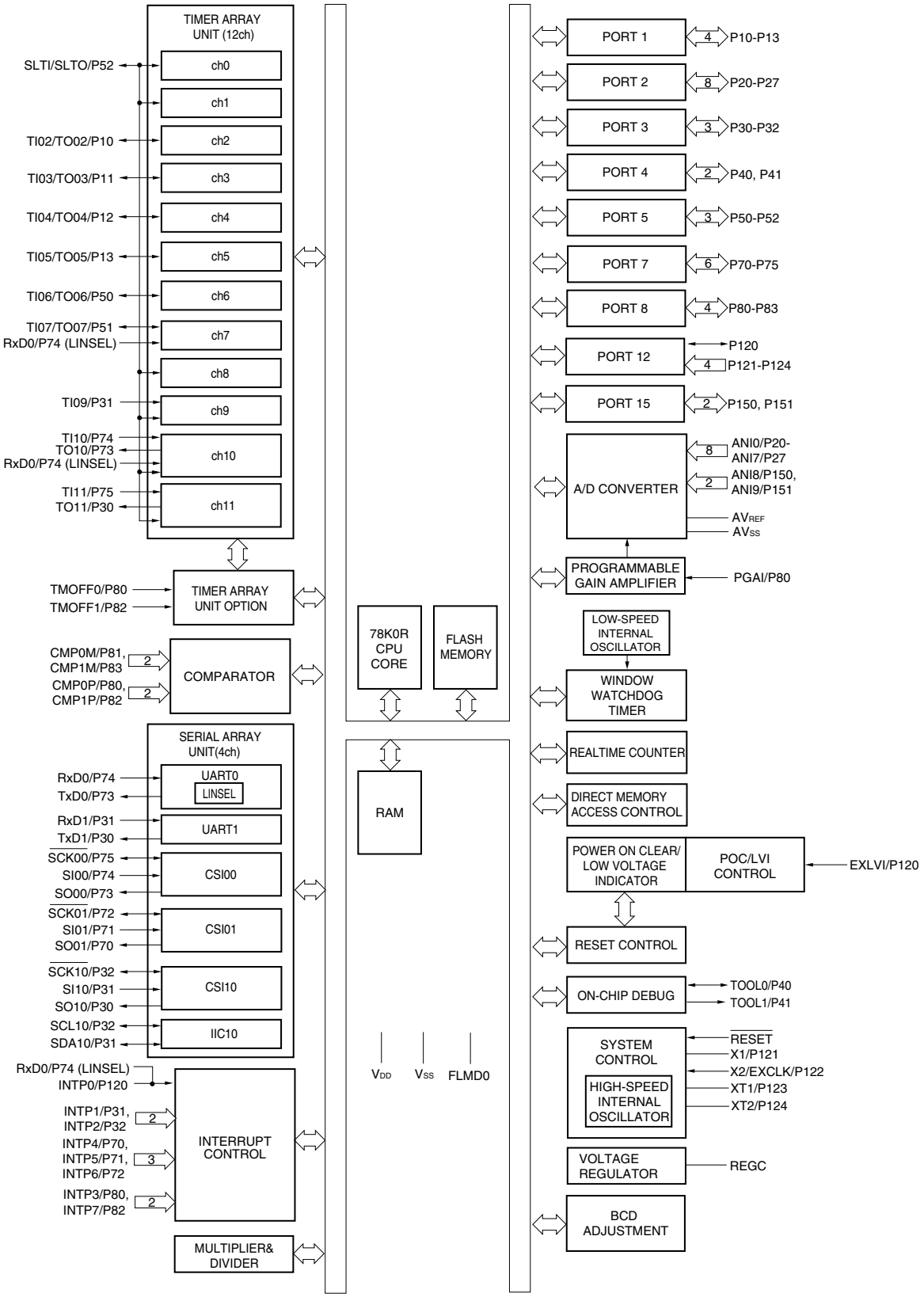

- 48-pin products

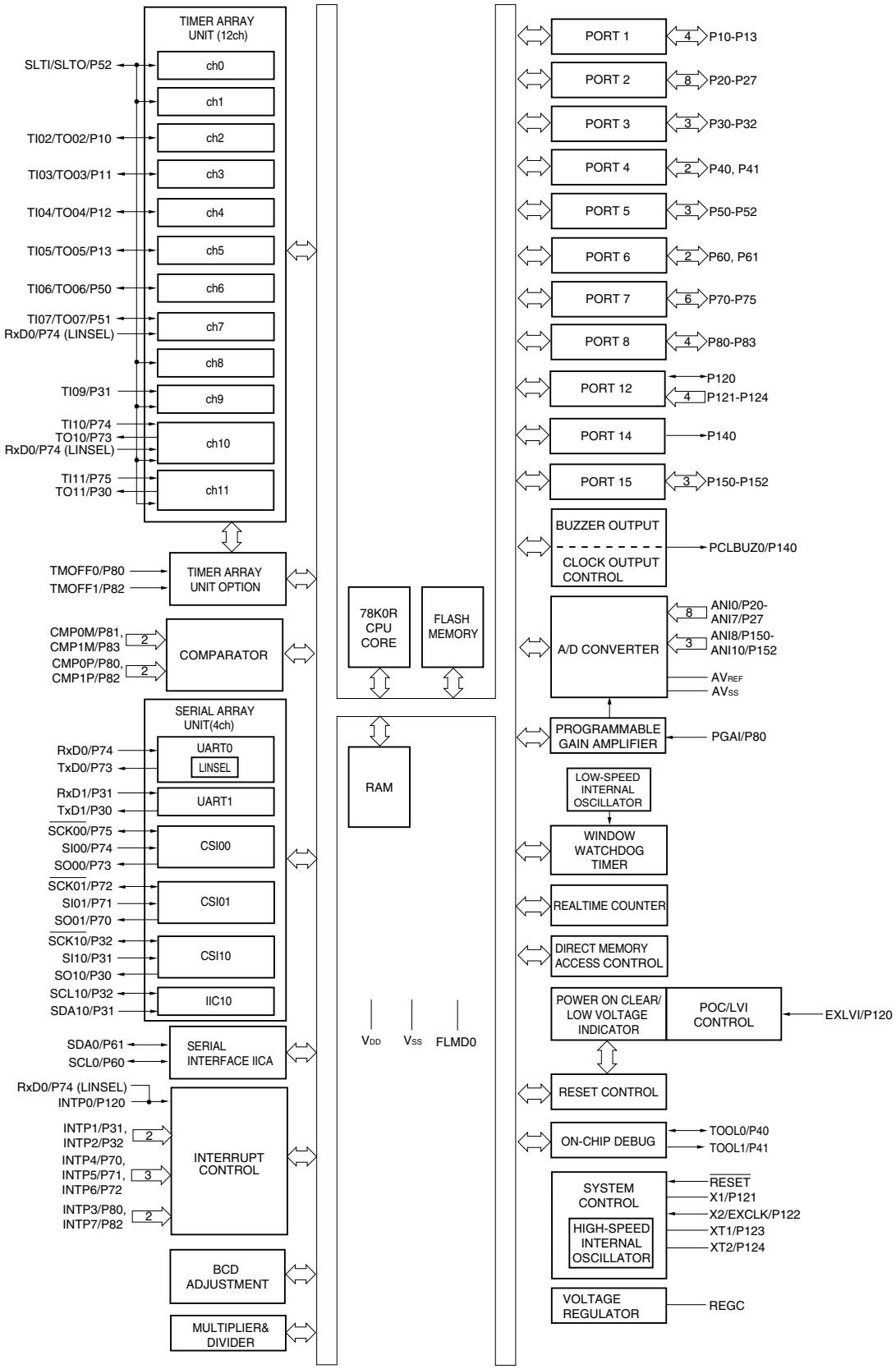

1.6.3 78K0R/ID3

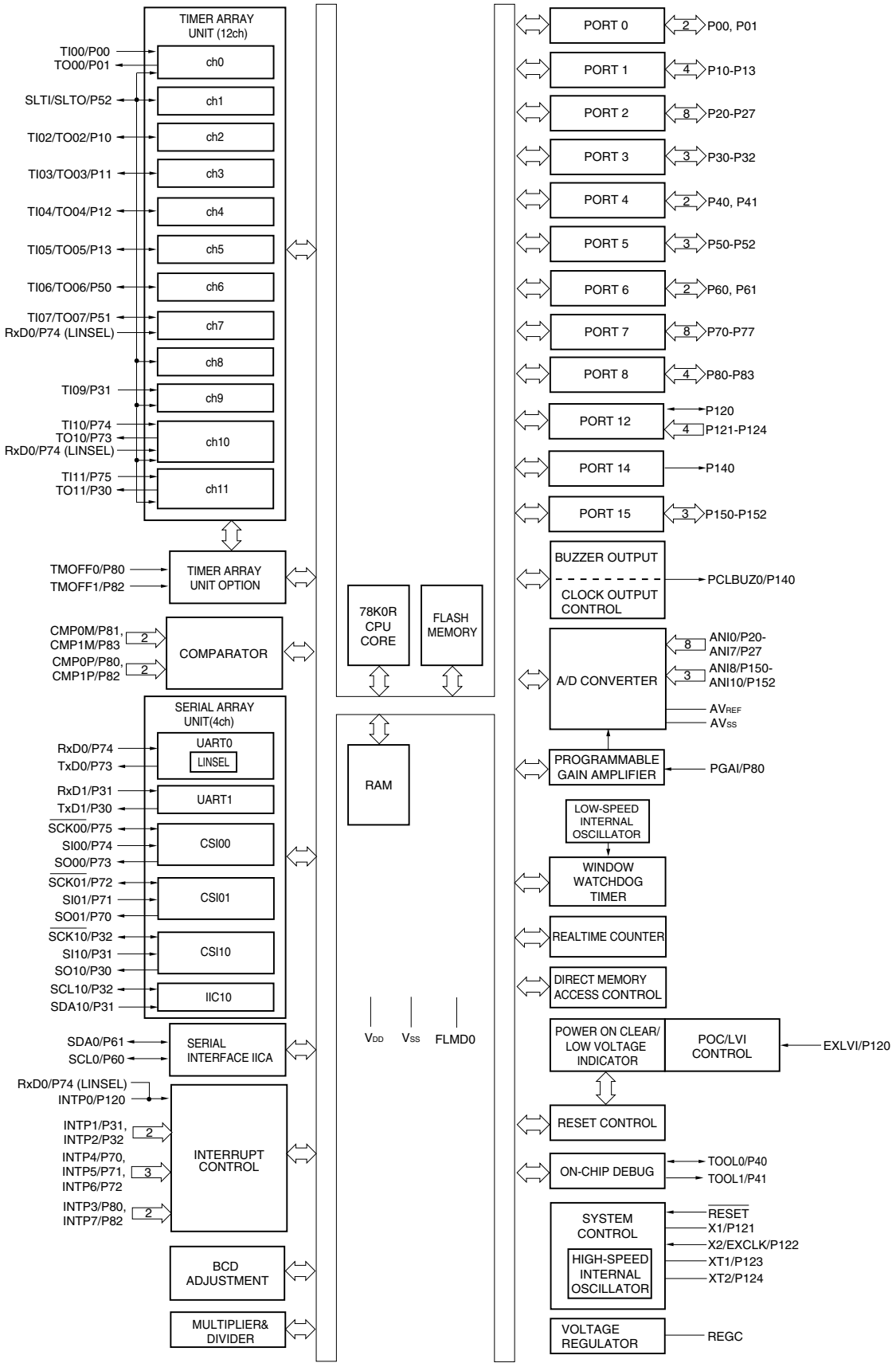

1.6.4 78K0R/IE3

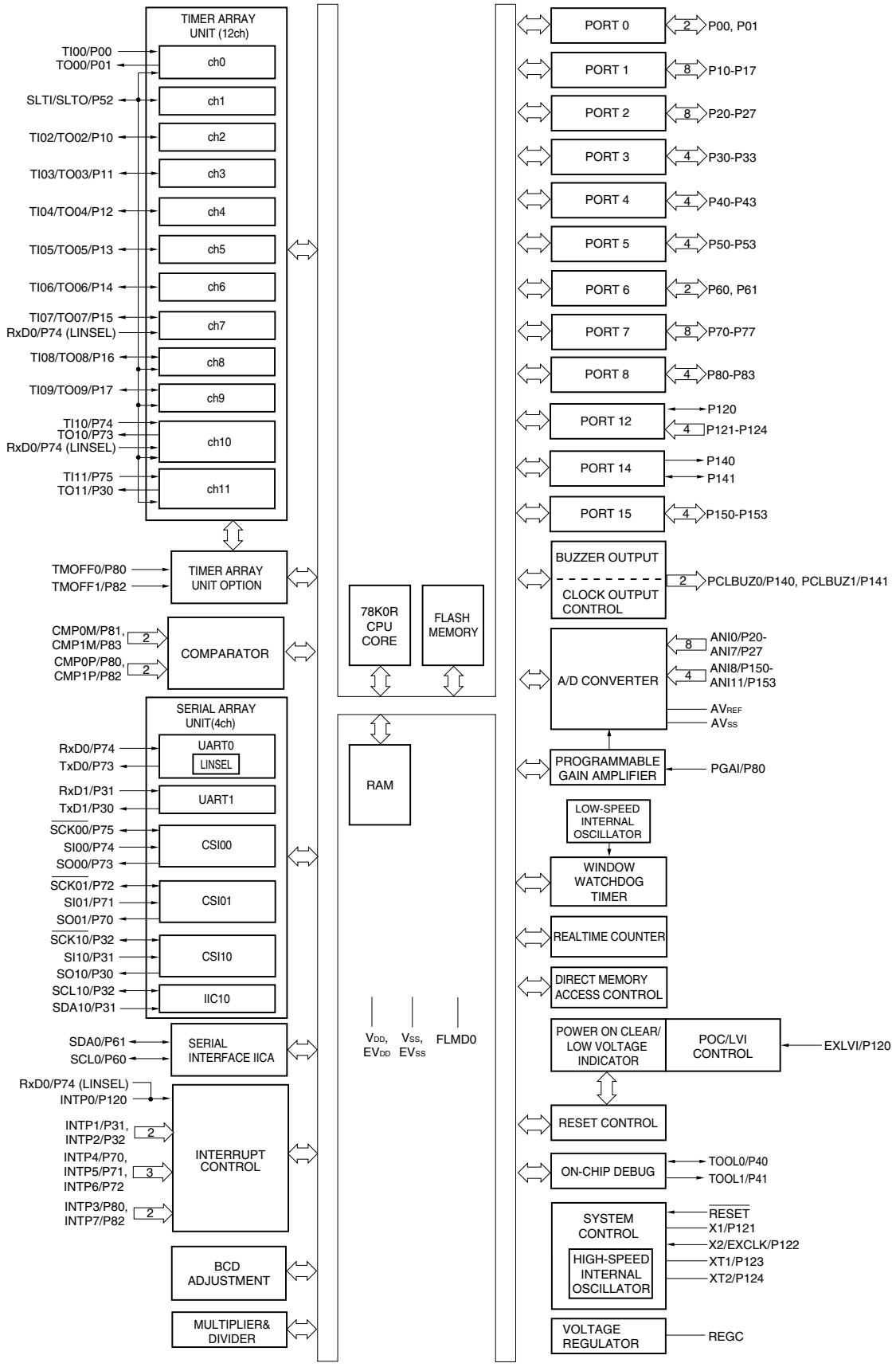

1.7 Outline of Functions

(1/2)

Item		78K0R/IB3		78K0R/IC3							78K0R/ID3			78K0R/IE3		
				38-pin		44-pin		48-pin								
Part Number		μPD78F1201	μPD78F1203	μPD78F1211	μPD78F1213	μPD78F1211	μPD78F1213	μPD78F1213	μPD78F1214	μPD78F1215	μPD78F1223	μPD78F1224	μPD78F1225	μPD78F1233	μPD78F1234	μPD78F1235
Internal memory	Flash memory (self-programming supported) (KB)	16	32	16	32	16	32	32	48	64	32	48	64	32	48	64
	RAM (KB)	1	1.5	1	1.5	1	1.5	1.5	2	3 Note 1	1.5	2	3 Note 1	1.5	2	3 Note 1
Memory space		1 MB														
Main system clock (Oscillation frequency)	High-speed system clock	X1 (crystal/ceramic) oscillation, external main system clock input (EXCLK) 2 to 20 MHz: V_{DD} = 2.7 to 5.5 V														
	Internal high-speed oscillation clock	Internal oscillation 8 MHz (TYP.): V_{DD} = 2.7 to 5.5 V														
	40 MHz internal high-speed oscillation clock	Internal oscillation 40 MHz (TYP.): V_{DD} = 2.7 to 5.5 V														
Subsystem clock (Oscillation frequency)		–		XT1 (crystal) oscillation 32.768 kHz (TYP.): V_{DD} = 2.7 to 5.5 V												
Internal low-speed oscillation clock (dedicated to WDT)		Internal oscillation 30 kHz (TYP.): V_{DD} = 2.7 to 5.5 V														
General-purpose register		8 bits × 32 registers (8 bits × 8 registers × 4 banks)														
Minimum instruction execution time		0.05 μs (High-speed system clock: f_{MX} = 20 MHz operation)														
		0.125 μs (Internal high-speed oscillation clock: f_{IH} = 8 MHz (TYP.) operation)														
		–		61 μs (Subsystem clock: f_{SUB} = 32.768 kHz operation)												
Instruction set		• 8-bit operation, 16-bit operation • Multiply (8 bits × 8 bits) • Bit manipulation (Set, reset, test, and Boolean operation), etc.														
I/O port	Total	23		31		37		41			45			55		
	CMOS I/O	21		27		33		34			38			48		
	CMOS input	2		4		4		4			4			4		
	CMOS output	–		–		–		1			1			1		
	N-ch open-drain I/O (6 V tolerance)	–		–		–		2			2			2		
Timer	16-bit timer	12 channels														
	Watchdog timer	1 channel														
	Real-time counter	–		1 channel												
	Timer outputs (PWM output Note 2)	7 (7)		9 (9)							10 (9)			12 (11)		

Notes 1. This is 2 KB when the self-programming function is used.

2. The number of outputs varies, depending on the setting.

(2/2)

Item		78K0R/IB3		78K0R/IC3							78K0R/ID3			78K0R/IE3		
				38-pin		44-pin		48-pin								
Part Number		μPD78F1201	μPD78F1203	μPD78F1211	μPD78F1213	μPD78F1211	μPD78F1213	μPD78F1213	μPD78F1214	μPD78F1215	μPD78F1223	μPD78F1224	μPD78F1225	μPD78F1233	μPD78F1234	μPD78F1235
Clock output/buzzer output		–						1						2		
								• 2.44 kHz, 4.88 kHz, 9.76 kHz, 1.25 MHz, 2.5 MHz 5 MHz, 10 MHz (peripheral hardware clock: f_{MAIN} = 20 MHz operation) • 256 Hz, 512 Hz, 1.024 kHz, 2.048 kHz 4.096 kHz, 8.192 kHz, 16.384 kHz, 32.768 kHz (Subsystem clock: f_{SUB} = 32.768 kHz operation)								
10-bit resolution A/D converter (AV_{REF} = 2.7 to 5.5 V)		6 channels		8 channels		10 channels		11 channels						12 channels		
Serial interface		**78K0R/IB3, 78K0R/IC3 (38-pins)** • UART (LIN-bus supported): 1 channel • CSI: 1 channel/UART: 1 channel/simplified I²C: 1 channel **78K0R/IC3 (44-pins)** • CSI: 2 channel/ UART (LIN-bus supported): 1 channel • CSI: 1 channel/UART: 1 channel/simplified I²C: 1 channel **78K0R/IC3 (48-pins), 78K0R/ID3, 78K0R/IE3** • CSI: 2 channel/ UART (LIN-bus supported): 1 channel • CSI: 1 channel/UART: 1 channel/simplified I²C: 1 channel • I²C: 1 channel														
Multiplier/divider		• 16 bits × 16 bits = 32 bits (multiplication) • 32 bits ÷ 32 bits = 32 bits (division)														
DMA controller		2 channels														
Vectored interrupt sources	Internal	31		33		33		34			34			34		
	External	6		8		8		8			8			8		
Reset		• Reset by $\overline{\text{RESET}}$ pin • Internal reset by watchdog timer • Internal reset by power-on-clear • Internal reset by low-voltage detector • Internal reset by illegal instruction execution Note • Internal reset by a reset processing check error														
Power-on-clear circuit		• Power-on-reset: 1.61 ±0.09 V • Power-down-reset: 1.59 ±0.09 V														
Low-voltage detector		2.84 V to 4.22 V (10 stages)														
On-chip debug function		Provided														
Power supply voltage		V_{DD} = 2.7 to 5.5 V														
Operating ambient temperature		T_A = –40 to +85 °C														

Note The illegal instruction is generated when instruction code FFH is executed.
Reset by the illegal instruction execution not issued by emulation with the in-circuit emulator or on-chip debug emulator.

CHAPTER 2 PIN FUNCTIONS

2.1 Pin Function List

There are three types of pin I/O buffer power supplies: AV_{REF}, EV_{DD}, and V_{DD}. The relationship between these power supplies and the pins is shown below.

Table 2-1. Pin I/O Buffer Power Supplies (78K0R/IB3)

- 30-pin plastic SSOP (7.62 mm (300))

Power Supply	Corresponding Pins
AV_{REF}	P20 to P25, P80, P81, P83
V_{DD}	• Port pins other than P20 to P25, P80, P81, P83 • Pins other than port pins

Table 2-2. Pin I/O Buffer Power Supplies (78K0R/IC3)

- 38-pin plastic SSOP (7.62 mm (300))
- 44-pin plastic LQFP (10x10)
- 48-pin plastic TQFP (fine pitch) (7x7)

Power Supply	Corresponding Pins
AV_{REF}	P20 to P27, P150 , P151 (44-pin products), P150 to P152 (48-pin products), P80 to P83
V_{DD}	• Port pins other than P20 to P27, P150 to P152, P80 to P83 • Pins other than port pins

Table 2-3. Pin I/O Buffer Power Supplies (78K0R/ID3)

- 52-pin plastic LQFP (10x10)

Power Supply	Corresponding Pins
AV_{REF}	P20 to P27, P150 to P152, P80 to P83
V_{DD}	• Port pins other than P20 to P27, P150 to P152, P80 to P83 • Pins other than port pins

Table 2-4. Pin I/O Buffer Power Supplies (78K0R/IE3)

- 64-pin plastic LQFP (12x12)
- 64-pin plastic LQFP (fine pitch) (10x10)

Power Supply	Corresponding Pins
AV_{REF}	P20 to P27, P150 to P153, P80 to P83
EV_{DD}	• Port pins other than P20 to P27, P150 to P153, P80 to P83, P121 to P124 • The $\overline{RESET}$ pin and FLMD0 pin
V_{DD}	• P121 to P124 • Pins other than port pins (other than the $\overline{RESET}$ pin and FLMD0 pin)

2.1.1 78K0R/IB3

(1) Port functions : 78K0R/IB3

Function Name	I/O	Function	After Reset	Alternate Function
P10	I/O	Port 1. 4-bit I/O port. Input/output can be specified in 1-bit units. Use of an on-chip pull-up resistor can be specified by a software setting.	Input port	TI02/TO02/TxD0
P11				TI03/TO03/RxD0
P12				TI04/TO04
P13				TI05/TO05
P20 to P25	I/O	Port 2. 6-bit I/O port. Input/output can be specified in 1-bit units.	Digital input port	ANI0 to ANI5
P30	I/O	Port 3. 3-bit I/O port. Input of P31 and P32 can be set to TTL buffer. Output of P30 to P32 can be set to N-ch open-drain output (V_{DD} tolerance). Input/output can be specified in 1-bit units. Use of an on-chip pull-up resistor can be specified by a software setting.	Input port	SO10/TxD1/TO11
P31				SI10/RxD1/SDA10/ INTP1/TI09
P32				$\overline{\text{SCK10}}$/SCL10/ INTP2
P40[Note]	I/O	Port 4. 2-bit I/O port. Input/output can be specified in 1-bit units. Use of an on-chip pull-up resistor can be specified by a software setting.	Input port	TOOL0
P41				TOOL1
P50	I/O	Port 5. 2-bit I/O port. Input/output can be specified in 1-bit units. Use of an on-chip pull-up resistor can be specified by a software setting.	Input port	TI06/TO06
P51				TI07/TO07
P80	I/O	Port 8. 3-bit I/O port. Inputs/output can be specified in 1-bit units. Inputs of P80, P81 and P83 can be set as comparator inputs or programmable gain amplifier inputs.	Analog input	CMP0P/TMOFF0/ INTP3/PGAI
P81				CMP0M
P83				CMP1M
P120	I/O	Port 12. 1-bit I/O port and 2-bit input port. For only P120, input/output can be specified in 1-bit units. For only P120, use of an on-chip pull-up resistor can be specified by a software setting.	Input port	INTP0/EXLVI
P121	Input			X1/INTP4
P122				X2/EXCLK/INTP5

Note If on-chip debugging is enabled by using an option byte, be sure to pull up the P40/TOOL0 pin externally (see **Caution** in **2.2.5 P40 to P43 (port 4)**).

(2) Non-port functions (1/2): 78K0R/IB3

Function Name	I/O	Function	After Reset	Alternate Function
ANI0 to ANI5	Input	A/D converter analog input	Digital input port	P20 to P25
CMP0M	Input	Input voltage on the (–) side of comparator 0	Analog input	P81
CMP0P	Input	Input voltage on the (+) side of comparator 0		P80/TMOFF0/ INTP3/PGAI
CMP1M	Input	Input voltage on the (–) side of comparator 1		P83
EXLVI	Input	Potential input for external low-voltage detection	Input port	P120/INTP0
INTP0	Input	External interrupt request input for which the valid edge (rising edge, falling edge, or both rising and falling edges) can be specified	Input port	P120/EXLVI
INTP1				P31/SI10/RxD1/ SDA10/TI09
INTP2				P32/$\overline{\text{SCK10}}$/SCL10
INTP3			Analog input	P80/CMP0P/ TMOFF0/PGAI
INTP4			Input port	P122/X1
INTP5				P122/X2/EXCLK
PGAI	Input	Programmable gain amplifier input	Analog input	P80/CMP0P/ TMFOFF0/INTP3
REGC	–	Connecting regulator output stabilization capacitance for internal operation. Connect to V_{SS} via a capacitor (0.47 to 1 μF).	–	–
$\overline{\text{RESET}}$	Input	System reset input	–	–
RxD0	Input	Serial data input to UART0	Input port	P11/TI03/TO03
RxD1		Serial data input to UART1		P31/SI10/SDA10/ INTP1/TI09
$\overline{\text{SCK10}}$	I/O	Clock input/output for CSI10	Input port	P32/SCL10/INTP2
SCL10	I/O	Clock input/output for simplified I^2C	Input port	P32/$\overline{\text{SCK10}}$/INTP2
SDA10	I/O	Serial data I/O for simplified I^2C	Input port	P31/SI10/RxD1/ INTP1/TI09
SI10	Input	Serial data input to CSI10	Input port	P31/RxD1/SDA10/ INTP1/TI09
SO10	Output	Serial data output from CSI10	Input port	P30/TxD1/TO11

(2) Non-port functions (2/2): 78K0R/IB3

Function Name	I/O	Function	After Reset	Alternate Function
TI02	Input	External count clock input to 16-bit timer 02	Input port	P10/TO02/TxD0
TI03		External count clock input to 16-bit timer 03		P11/TO03/RxD0
TI04		External count clock input to 16-bit timer 04		P12/TO04
TI05		External count clock input to 16-bit timer 05		P13/TO05
TI06		External count clock input to 16-bit timer 06		P50/TO06
TI07		External count clock input to 16-bit timer 07		P51/TO07
TI09		External count clock input to 16-bit timer 09		P31/SI10/RxD1/ SDA10/INTP1
TMOFF0	Input	Timer output pin (TO02 to TO07) Hi-Z control input	Analog input	P80/CMP0P/INTP3/ PGAI
TO02	Output	16-bit timer 02 output	Input port	P10/TI02/TxD0
TO03		16-bit timer 03 output		P11/TI03/RxD0
TO04		16-bit timer 04 output		P12/TI04
TO05		16-bit timer 05 output		P13/TI05
TO06		16-bit timer 06 output		P50/TI06
TO07		16-bit timer 07 output		P51/TI07
TO11		16-bit timer 11 output		P30/SO10/TO11
TxD0	Output	Serial data output from UART0	Input port	P10/TI02/TO02
TxD1	Output	Serial data output from UART1	Input port	P30/SO10/TO11
X1	–	Resonator connection for main system clock	Input port	P121/INTP4
X2	–		Input port	P122/EXCLK/ INTP5
EXCLK	Input	External clock input for main system clock	Input port	P122/X2/INTP5
V_{DD}	–	Positive power supply (Port pins other than P20 to P25, P80, P81, P83 and other than ports)	–	–
AV_{REF}	–	• A/D converter and comparator reference voltage input • Positive power supply for P20 to P25, P80, P81, P83, A/D converter, programmable gain amplifier, and comparator	–	–
V_{SS}	–	Ground potential (Port pins other than P20 to P25, P80, P81, P83, and other than ports)	–	–
AV_{SS}	–	Ground potential for A/D converter, programmable gain amplifier, comparator, P20 to P25, P80, P81, P83	–	–
FLMD0	–	Flash memory programming mode setting	–	–
TOOL0	I/O	Data I/O for flash memory programmer/debugger	Input port	P40
TOOL1	Output	Clock output for debugger	Input port	P41

2.1.2 78K0R/IC3

(1) 38-pin products

(a) Port functions (1/2): 78K0R/IC3 38-pin products

Function Name	I/O	Function	After Reset	Alternate Function
P10	I/O	Port 1. 4-bit I/O port. Input/output can be specified in 1-bit units. Use of an on-chip pull-up resistor can be specified by a software setting.	Input port	TI02/TO02
P11				TI03/TO03
P12				TI04/TO04
P13				TI05/TO05
P20 to P27	I/O	Port 2. 8-bit I/O port. Input/output can be specified in 1-bit units.	Digital input port	ANI0 to ANI7
P30	I/O	Port 3. 3-bit I/O port. Input of P31 and P32 can be set to TTL buffer. Output of P30 to P32 can be set to N-ch open-drain output (V_{DD} tolerance). Input/output can be specified in 1-bit units. Use of an on-chip pull-up resistor can be specified by a software setting.	Input port	SO10/TxD1/TO11
P31				SI10/RxD1/SDA10/ INTP1/TI09
P32				$\overline{\text{SCK10}}$/SCL10/ INTP2
P40[Note]	I/O	Port 4. 2-bit I/O port. Input/output can be specified in 1-bit units. Use of an on-chip pull-up resistor can be specified by a software setting.	Input port	TOOL0
P41				TOOL1
P50	I/O	Port 5. 3-bit I/O port. Input/output can be specified in 1-bit units. Use of an on-chip pull-up resistor can be specified by a software setting.	Input port	TI06/TO06
P51				TI07/TO07
P52				SLTI/SLTO
P72	I/O	Port 7. 2-bit I/O port. Input of P72 can be set to TTL buffer. Output of P73 can be set to N-ch open-drain output (V_{DD} tolerance). Input/output can be specified in 1-bit units. Use of an on-chip pull-up resistor can be specified by a software setting.	Input port	INTP6/RxD0
P73				TxD0/TO10
P80	I/O	Port 8. 4-bit I/O port. Inputs/output can be specified in 1-bit units. Inputs of P80 to P83 can be set as comparator inputs or programmable gain amplifier inputs.	Analog input	CMP0P/TMOFF0/ INTP3/PGAI
P81				CMP0M
P82				CMP1P/TMOFF1/ INTP7
P83				CMP1M

Note If on-chip debugging is enabled by using an option byte, be sure to pull up the P40/TOOL0 pin externally (see **Caution** in **2.2.5 P40 to P43 (port 4)**).

(a) Port functions (2/2): 78K0R/IC3 38-pin products

Function Name	I/O	Function	After Reset	Alternate Function
P120	I/O	Port 12. 1-bit I/O port and 4-bit input port. For only P120, input/output can be specified in 1-bit units. For only P120, use of an on-chip pull-up resistor can be specified by a software setting.	Input port	INTP0/EXLVI
P121	Input			X1/INTP4
P122				X2/EXCLK /INTP5
P123				XT1
P124				XT2

(b) Non-port functions (1/2): 78K0R/IC3 38-pin products

Function Name	I/O	Function	After Reset	Alternate Function
ANI0 to ANI7	Input	A/D converter analog input	Digital input port	P20 to P27
CMP0M	Input	Input voltage on the (–) side of comparator 0	Analog input	P81
CMP0P	Input	Input voltage on the (+) side of comparator 0		P80/TMOFF0/ INTP3/PGAI
CMP1M	Input	Input voltage on the (–) side of comparator 1		P83
CMP1P	Input	Input voltage on the (+) side of comparator 1		P82/TMOFF1/ INTP7
EXLVI	Input	Potential input for external low-voltage detection	Input port	P120/INTP0
INTP0	Input	External interrupt request input for which the valid edge (rising edge, falling edge, or both rising and falling edges) can be specified	Input port	P120/EXLVI
INTP1				P31/SI10/RxD1/ SDA10/TI09
INTP2				P32/$\overline{\text{SCK10}}$/SCL10
INTP3			Analog input	P80/CMP0P/ TMOFF0/PGAI
INTP4			Input port	P121/X1
INTP5				P122/X2/EXCLK
INTP6				P72/RxD0
INTP7			Analog input	P82/CMP1P/ TMOFF1
PGAI	Input	Programmable gain amplifier input	Analog input	P80/CMP0P/ TMOFF0/INTP3
REGC	–	Connecting regulator output stabilization capacitance for internal operation. Connect to V_{SS} via a capacitor (0.47 to 1 μF).	–	–
$\overline{\text{RESET}}$	Input	System reset input	–	–
RxD0	Input	Serial data input to UART0	Input port	P72/INTP6
RxD1		Serial data input to UART1		P31/SI10/SDA10/ INTP1/TI09
$\overline{\text{SCK10}}$	I/O	Clock input/output for CSI10	Input port	P32/SCL10/INTP2
SCL10	I/O	Clock input/output for simplified I^2C	Input port	P32/$\overline{\text{SCK10}}$/INTP2
SDA10	I/O	Serial data I/O for simplified I^2C	Input port	P31/SI10/RxD1/ INTP1/TI09
SI10	Input	Serial data input to CSI10	Input port	P31/RxD1/SDA10/ INTP1/TI09
SLTI	Input	16-bit timer 00, 01, 08, 09, 10, 11 input	Input port	P52/SLTO
SLTO	Output	16-bit timer 00, 01, 08, 09, 10, 11 output	Input port	P52/SLTI
SO10	Output	Serial data output from CSI10	Input port	P30/TxD1/TO11

(b) Non-port functions (2/2): 78K0R/IC3 38-pin products

Function Name	I/O	Function	After Reset	Alternate Function
TI02	Input	External count clock input to 16-bit timer 02	Input port	P10/TO02
TI03		External count clock input to 16-bit timer 03		P11/TO03
TI04		External count clock input to 16-bit timer 04		P12/TO04
TI05		External count clock input to 16-bit timer 05		P13/TO05
TI06		External count clock input to 16-bit timer 06		P50/TO06
TI07		External count clock input to 16-bit timer 07		P51/TO07
TI09		External count clock input to 16-bit timer 09		P31/SI10/RxD1/ SDA10/INTP1
TMOFF0	Input	Timer output pin (TO02 to TO07) Hi-Z control input	Analog input	P80/CMP0P/INTP3/ PGAI
TMOFF1				P82/CMP1P/INTP7
TO02	Output	16-bit timer 02 output	Input port	P10/TI02
TO03		16-bit timer 03 output		P11/TI03
TO04		16-bit timer 04 output		P12/TI04
TO05		16-bit timer 05 output		P13/TI05
TO06		16-bit timer 06 output		P50/TI06
TO07		16-bit timer 07 output		P51/TI07
TO10		16-bit timer 10 output		P73/TxD0
TO11		16-bit timer 11 output		P30/SO10/TxD1
TxD0	Output	Serial data output from UART0	Input port	P73/SO00
TxD1		Serial data output from UART1		P30/SO10/TO11
X1	–	Resonator connection for main system clock	Input port	P121/ITNP4
X2	–		Input port	P122/EXCLK/ INTP5
EXCLK	Input	External clock input for main system clock	Input port	P122/X2/INTP5
XT1	–	Resonator connection for subsystem clock	Input port	P123
XT2	–		Input port	P124
V_{DD}	–	Positive power supply (Port pins other than P20 to P27, P80 to P83 and other than ports)	–	–
AV_{REF}	–	• A/D converter and comparator reference voltage input • Positive power supply for P20 to P27, P80 to P83, A/D converter, programmable gain amplifier, and comparator	–	–
V_{SS}	–	Ground potential (Port pins other than P20 to P27, P80 to P83 and other than ports)	–	–
AV_{SS}	–	Ground potential for A/D converter, programmable gain amplifier, comparator, P20 to P27 and P80 to P83	–	–
FLMD0	–	Flash memory programming mode setting	–	–
TOOL0	I/O	Data I/O for flash memory programmer/debugger	Input port	P40
TOOL1	Output	Clock output for debugger	Input port	P41

(2) 44-pin products

(a) Port functions (1/2): 78K0R/IC3 44-pin products

Function Name	I/O	Function	After Reset	Alternate Function
P10	I/O	Port 1. 4-bit I/O port. Input/output can be specified in 1-bit units. Use of an on-chip pull-up resistor can be specified by a software setting.	Input port	TI02/TO02
P11				TI03/TO03
P12				TI04/TO04
P13				TI05/TO05
P20 to P27	I/O	Port 2. 8-bit I/O port. Input/output can be specified in 1-bit units.	Digital input port	ANI0 to ANI7
P30	I/O	Port 3. 3-bit I/O port. Input of P31 and P32 can be set to TTL buffer. Output of P30 to P32 can be set to N-ch open-drain output (V_{DD} tolerance). Input/output can be specified in 1-bit units. Use of an on-chip pull-up resistor can be specified by a software setting.	Input port	SO10/TxD1/TO11
P31				SI10/RxD1/SDA10/ INTP1/TI09
P32				$\overline{\text{SCK10}}$/SCL10/ INTP2
P40[Note]	I/O	Port 4. 2-bit I/O port. Input/output can be specified in 1-bit units. Use of an on-chip pull-up resistor can be specified by a software setting.	Input port	TOOL0
P41				TOOL1
P50	I/O	Port 5. 3-bit I/O port. Input/output can be specified in 1-bit units. Use of an on-chip pull-up resistor can be specified by a software setting.	Input port	TI06/TO06
P51				TI07/TO07
P52				SLTI/SLTO
P70	I/O	Port 7. 6-bit I/O port. Input of P71, P72, P74, and P75 can be set to TTL buffer. Output of P70, P72, P73, and P75 can be set to N-ch open-drain output (V_{DD} tolerance). Input/output can be specified in 1-bit units. Use of an on-chip pull-up resistor can be specified by a software setting.	Input port	SO01/INTP4
P71				SI01/INTP5
P72				$\overline{\text{SCK01}}$/INTP6
P73				SO00/TxD0/TO10
P74				SI00/RxD0/TI10
P75				$\overline{\text{SCK00}}$/TI11
P80	I/O	Port 8. 4-bit I/O port. Input/output can be specified in 1-bit units. Inputs of P80 to P83 can be set as comparator inputs or programmable gain amplifier inputs.	Analog input	CMP0P/TMOFF0/ INTP3/PGAI
P81				CMP0M
P82				CMP1P/TMOFF1/ INTP7
P83				CMP1M

Note If on-chip debugging is enabled by using an option byte, be sure to pull up the P40/TOOL0 pin externally (see **Caution** in **2.2.5 P40 to P43 (port 4)**).

(a) Port functions (2/2): 78K0R/IC3 44-pin products

Function Name	I/O	Function	After Reset	Alternate Function
P120	I/O	Port 12. 1-bit I/O port and 4-bit input port. For only P120, input/output can be specified in 1-bit units. For only P120, use of an on-chip pull-up resistor can be specified by a software setting.	Input port	INTP0/EXLVI
P121	Input			X1
P122				X2/EXCLK
P123				XT1
P124				XT2
P150, P151	I/O	Port 15. 2-bit I/O port. Input/output can be specified in 1-bit units.	Digital input port	ANI8, ANI9

(b) Non-Port functions (1/2): 78K0R/IC3 44-pin products

Function Name	I/O	Function	After Reset	Alternate Function
ANI0 to ANI7	Input	A/D converter analog input	Digital input port	P20 to P27
ANI8, ANI9				P150, P151
CMP0M	Input	Input voltage on the (–) side of comparator 0	Analog input	P81
CMP0P	Input	Input voltage on the (+) side of comparator 0		P80/TMOFF0/ INTP3/PGAI
CMP1M	Input	Input voltage on the (–) side of comparator 1		P83
CMP1P	Input	Input voltage on the (+) side of comparator 1		P82/TMOFF1/ INTP7
EXLVI	Input	Potential input for external low-voltage detection	Input port	P120/INTP0
INTP0	Input	External interrupt request input for which the valid edge (rising edge, falling edge, or both rising and falling edges) can be specified	Input port	P120/EXLVI
INTP1				P31/SI10/RxD1/ SDA10/TI09
INTP2				P32/$\overline{\text{SCK10}}$/SCL10
INTP3			Analog input	P80/CMP0P/ TMOFF0/PGAI
INTP4			Input port	P70/SO01
INTP5				P71/SI01
INTP6				P72/$\overline{\text{SCK01}}$
INTP7			Analog input	P82/CMP1P/ TMOFF1
PGAI	Input	Programmable gain amplifier input	Analog input	P80/CMP0P/ TMOFF0/INTP3
REGC	–	Connecting regulator output stabilization capacitance for internal operation. Connect to V_{SS} via a capacitor (0.47 to 1 μF).	–	–
$\overline{\text{RESET}}$	Input	System reset input	–	–
RxD0	Input	Serial data input to UART0	Input port	P74/SI00/TI00
RxD1		Serial data input to UART1		P31/SI10/SDA10/ INTP1/TI09
$\overline{\text{SCK00}}$	I/O	Clock input/output for CSI00, CSI01, and CSI10	Input port	P75/TI11
$\overline{\text{SCK01}}$				P72/INTP6
$\overline{\text{SCK10}}$				P32/SCL10/INTP2
SCL10	I/O	Clock input/output for simplified I^2C	Input port	P32/$\overline{\text{SCK10}}$/INTP2
SDA10	I/O	Serial data I/O for simplified I^2C	Input port	P31/SI10/RxD1/ INTP1/TI09
SI00	Input	Serial data input to CSI00, CSI01, and CSI10	Input port	P74/RxD0/TI10
SI01				P71/INTP5
SI10				P31/RxD1/SDA10/ INTP1/TI09
SLTI	Input	16-bit timer 00, 01, 08, 09, 10, 11 input	Input port	P52/SLTO
SLTO	Output	16-bit timer 00, 01, 08, 09, 10, 11 output	Input port	P52/SLTI

(b) Non-Port functions (2/2): 78K0R/IC3 44-pin products

Function Name	I/O	Function	After Reset	Alternate Function
SO00	Output	Serial data output from CSI00, CSI01, and CSI10	Input port	P73/TxD0/TO10
SO01				P70/INTP4
SO10				P30/TxD1/TO11
TI02	Input	External count clock input to 16-bit timer 02	Input port	P10/TO02
TI03		External count clock input to 16-bit timer 03		P11/TO03
TI04		External count clock input to 16-bit timer 04		P12/TO04
TI05		External count clock input to 16-bit timer 05		P13/TO05
TI06		External count clock input to 16-bit timer 06		P50/TO06
TI07		External count clock input to 16-bit timer 07		P51/TO07
TI09		External count clock input to 16-bit timer 09		P31/SI10/RxD1/ SDA10/INTP1
TI10		External count clock input to 16-bit timer 10		P74/SI00/RxD0
TI11		External count clock input to 16-bit timer 11		P75/$\overline{\text{SCK00}}$
TMOFF0	Input	Timer output pin (TO02 to TO07) Hi-Z control input	Analog input	P80/CMP0P/INTP3/ PGAI
TMOFF1				P82/CMP1P/INTP7
TO02	Output	16-bit timer 02 output	Input port	P10/TI02
TO03		16-bit timer 03 output		P11/TI03
TO04		16-bit timer 04 output		P12/TI04
TO05		16-bit timer 05 output		P13/TI05
TO06		16-bit timer 06 output		P14/TI06
TO07		16-bit timer 07 output		P15/TI07
TO10		16-bit timer 10 output		P73/SO00/TxD0
TO11		16-bit timer 11 output		P30/SO10/TxD1
TxD0	Output	Serial data output from UART0	Input port	P73/SO00/TO10
TxD1		Serial data output from UART1		P30/SO10/TO11
X1	–	Resonator connection for main system clock	Input port	P121
X2	–		Input port	P122/EXCLK
EXCLK	Input	External clock input for main system clock	Input port	P122/X2
XT1	–	Resonator connection for subsystem clock	Input port	P123
XT2	–		Input port	P124
V_{DD}	–	Positive power supply (P20 to P27, P80 to P83, P150, P151 and other than ports	–	–
AV_{REF}	–	• A/D converter and comparator reference voltage input • Positive power supply for P20 to P27, P80 to P83, P150, P151, A/D converter, programmable gain amplifier, and comparator	–	–
V_{SS}	–	Ground potential (P20 to P27, P80 to P83, P150, P151 and other than ports	–	–
AV_{SS}	–	Ground potential for A/D converter, programmable gain amplifier, comparator, P20 to P27, P80 to P83, P150, P151	–	–
FLMD0	–	Flash memory programming mode setting	–	–
TOOL0	I/O	Data I/O for flash memory programmer/debugger	Input port	P40
TOOL1	Output	Clock output for debugger	Input port	P41

(3) 48-pin products

(a) Port functions (1/2): 78K0R/IC3 48-pin products

Function Name	I/O	Function	After Reset	Alternate Function
P10	I/O	Port 1. 4-bit I/O port. Input/output can be specified in 1-bit units. Use of an on-chip pull-up resistor can be specified by a software setting.	Input port	TI02/TO02
P11				TI03/TO03
P12				TI04/TO04
P13				TI05/TO05
P20 to P27	I/O	Port 2. 8-bit I/O port. Input/output can be specified in 1-bit units.	Digital input port	ANI0 to ANI7
P30	I/O	Port 3. 3-bit I/O port. Input of P31 and P32 can be set to TTL buffer. Output of P30 to P32 can be set to N-ch open-drain output (V_{DD} tolerance). Input/output can be specified in 1-bit units. Use of an on-chip pull-up resistor can be specified by a software setting.	Input port	SO10/TxD1/TO11
P31				SI10/RxD1/SDA10/ INTP1/TI09
P32				$\overline{\text{SCK10}}$/SCL10/ INTP2
P40[Note]	I/O	Port 4. 2-bit I/O port. Input/output can be specified in 1-bit units. Use of an on-chip pull-up resistor can be specified by a software setting.	Input port	TOOL0
P41				TOOL1
P50	I/O	Port 5. 3-bit I/O port. Input/output can be specified in 1-bit units. Use of an on-chip pull-up resistor can be specified by a software setting.	Input port	TI06/TO06
P51				TI07/TO07
P52				SLTI/SLTO
P60	I/O	Port 6. 2-bit I/O port. Output of P60 and P61 is N-ch open-drain output (6 V tolerance). Input/output can be specified in 1-bit units.	Input port	SCL0
P61				SDA0
P70	I/O	Port 7. 6-bit I/O port. Input of P71, P72, P74, and P75 can be set to TTL buffer. Output of P70, P72, P73, and P75 can be set to N-ch open-drain output (V_{DD} tolerance). Input/output can be specified in 1-bit units. Use of an on-chip pull-up resistor can be specified by a software setting.	Input port	SO01/INTP4
P71				SI01/INTP5
P72				$\overline{\text{SCK01}}$/INTP6
P73				SO00/TxD0/TO10
P74				SI00/RxD0/TI10
P75				$\overline{\text{SCK00}}$/TI11
P80	I/O	Port 8. 4-bit I/O port. Inputs/output can be specified in 1-bit units. Inputs of P80 to P83 can be set as comparator inputs or programmable gain amplifier inputs.	Analog input	CMP0P/TMOFF0/ INTP3/PGAI
P81				CMP0M
P82				CMP1P/TMFF1/ INTP7
P83				CMP1M

Note If on-chip debugging is enabled by using an option byte, be sure to pull up the P40/TOOL0 pin externally (see **Caution** in **2.2.5 P40 to P43 (port 4)**).

(a) Port functions (2/2): 78K0R/IC3 48-pin products

Function Name	I/O	Function	After Reset	Alternate Function
P120	I/O	Port 12. 1-bit I/O port and 4-bit input port. For only P120, input/output can be specified in 1-bit units. For only P120, use of an on-chip pull-up resistor can be specified by a software setting.	Input port	INTP0/EXLVI
P121	Input			X1
P122				X2/EXCLK
P123				XT1
P124				XT2
P140	Output	Port 14. 1-bit I/O output port.	Output port	PCLBUZ0
P150 to P152	I/O	Port 15. 3-bit I/O port. Input/output can be specified in 1-bit units.	Digital input port	ANI8 to ANI11

(b) Non-Port functions (1/3): 78K0R/IC3 48-pin products

Function Name	I/O	Function	After Reset	Alternate Function
ANI0 to ANI7	Input	A/D converter analog input	Digital input port	P20 to P27
ANI8 to ANI10				P150 to P152
CMP0M	Input	Input voltage on the (–) side of comparator 0	Analog input	P81
CMP0P	Input	Input voltage on the (+) side of comparator 0		P80/TMOFF0/ INTP3/PGAI
CMP1M	Input	Input voltage on the (–) side of comparator 1		P83
CMP1P	Input	Input voltage on the (+) side of comparator 1		P82/TMOFF1/ INTP7
EXLVI	Input	Potential input for external low-voltage detection	Input port	P120/INTP0
INTP0	Input	External interrupt request input for which the valid edge (rising edge, falling edge, or both rising and falling edges) can be specified	Input port	P120/EXLVI
INTP1				P31/SI10/RxD1/ SDA10/TI09
INTP2				P32/$\overline{\text{SCK10}}$/SCL10
INTP3			Analog input	P80/CMP0P/ TMOFF0/PGAI
INTP4			Input port	P70/ SO01
INTP5				P71/ SI01
INTP6				P72/ $\overline{\text{SCK01}}$
INTP7			Analog input	P82/CMP1P/ TMOFF1
PCLBUZ0	Output	Clock output/buzzer output	Output port	P140
PGAI	Input	Programmable gain amplifier input	Analog input	P80/CMP0P/ TMOFF0/INTP3
REGC	–	Connecting regulator output stabilization capacitance for internal operation. Connect to V_{SS} via a capacitor (0.47 to 1 μF).	–	–
$\overline{\text{RESET}}$	Input	System reset input	–	–
RxD0	Input	Serial data input to UART0	Input port	P74/SI00/TI00
RxD1		Serial data input to UART1		P31/SI10/SDA10/ INTP1/TI09
$\overline{\text{SCK00}}$	I/O	Clock input/output for CSI00, CSI01, and CSI10	Input port	P75/TI11
$\overline{\text{SCK01}}$				P72/INTP6
$\overline{\text{SCK10}}$				P32/SCL10/INTP2
SCL0	I/O	Clock input/output for I^2C	Input port	P60
SCL10	I/O	Clock input/output for simplified I^2C	Input port	P32/$\overline{\text{SCK10}}$/INTP2
SDA0	I/O	Serial data I/O for I^2C	Input port	P61
SDA10		Serial data I/O for simplified I^2C		P31/SI10/RxD1/ INTP1/TI09
SI00	Input	Serial data input to CSI00, CSI01, and CSI10	Input port	P74/RxD0/TI10
SI01				P71/INTP5
SI10				P31/RxD1/SDA10/ INTP1/TI09
SLTI	Input	16-bit timer 00, 01, 08, 09, 10, 11 input	Input port	P52/SLTO

(b) Non-Port functions (2/3): 78K0R/IC3 48-pin products

Function Name	I/O	Function	After Reset	Alternate Function
SLTO	Output	16-bit timer 00, 01, 08, 09, 10, 11 output	Input port	P52/SLTI
SO00	Output	Serial data output to CSI00, CSI01, and CSI10	Input port	P73/TxD0/TO10
SO01				P70/INTP4
SO10				P30/TxD1/TO11
TI02	Input	External count clock input to 16-bit timer 02	Input port	P10/TO02
TI03		External count clock input to 16-bit timer 03		P11/TO03
TI04		External count clock input to 16-bit timer 04		P12/TO04
TI05		External count clock input to 16-bit timer 05		P13/TO05
TI06		External count clock input to 16-bit timer 06		P14/TO06
TI07		External count clock input to 16-bit timer 07		P15/TO07
TI09		External count clock input to 16-bit timer 09		P31/SI10/RxD1/ SDA10/INTP1
TI10		External count clock input to 16-bit timer 10		P74/SI00/RxD0
TI11		External count clock input to 16-bit timer 11		P75/$\overline{\text{SCK00}}$
TMOFF0	Input	Timer output pin (TO02 to TO07) Hi-Z control input	Analog input	P80/CMP0P/INTP3/ PGAI
TMOFF1				P82/CMP1P/INTP7
TO02	Output	16-bit timer 02 output	Input port	P10/TI02
TO03		16-bit timer 03 output		P11/TI03
TO04		16-bit timer 04 output		P12/TI04
TO05		16-bit timer 05 output		P13/TI05
TO06		16-bit timer 06 output		P50/TI06
TO07		16-bit timer 07 output		P51/TI07
TO10		16-bit timer 10 output		P73/SO00/TxD0
TO11		16-bit timer 11 output		P30/SO10/TxD1
TxD0	Output	Serial data output from UART0	Input port	P73/SO00/TO10
TxD1		Serial data output from UART1		P30/SO10/TO11
X1	–	Resonator connection for main system clock	Input port	P121
X2	–		Input port	P122/EXCLK
EXCLK	Input	External clock input for main system clock	Input port	P122/X2
XT1	–	Resonator connection for subsystem clock	Input port	P123
XT2	–		Input port	P124

(b) Non-Port functions (3/3): 78K0R/IC3 48-pin products

Function Name	I/O	Function	After Reset	Alternate Function
V_{DD}	–	Positive power supply (P20 to P27, P80 to P83, P150 to P152 and other than ports	–	–
AV_{REF}	–	• A/D converter and comparator reference voltage input • Positive power supply for P20 to P27, P80 to P83, P150 to P152, A/D converter, programmable gain amplifier, and comparator	–	–
V_{SS}	–	Ground potential (P20 to P27, P80 to P83, P150 to P152 and other than ports	–	–
AV_{SS}	–	Ground potential for A/D converter, programmable gain amplifier, comparator, P20 to P27, P80 to P83, P150 to P152	–	–
FLMD0	–	Flash memory programming mode setting	–	–
TOOL0	I/O	Data I/O for flash memory programmer/debugger	Input port	P40
TOOL1	Output	Clock output for debugger	Input port	P41

2.1.3 78K0R/ID3

(1) Port functions (1/2): 78K0R/ID3

Function Name	I/O	Function	After Reset	Alternate Function
P00	I/O	Port 0. 2-bit I/O port. Input/output can be specified in 1-bit units. Use of an on-chip pull-up resistor can be specified by a software setting.	Input port	TI00
P01				TO00
P10	I/O	Port 1. 4-bit I/O port. Input/output can be specified in 1-bit units. Use of an on-chip pull-up resistor can be specified by a software setting.	Input port	TI02/TO02
P11				TI03/TO03
P12				TI04/TO04
P13				TI05/TO05
P20 to P27	I/O	Port 2. 8-bit I/O port. Input/output can be specified in 1-bit units.	Digital input port	ANI0 to ANI7
P30	I/O	Port 3. 3-bit I/O port. Input of P31 and P32 can be set to TTL buffer. Output of P30 to P32 can be set to N-ch open-drain output (V_{DD} tolerance). Input/output can be specified in 1-bit units. Use of an on-chip pull-up resistor can be specified by a software setting.	Input port	SO10/TxD1/TO11
P31				SI10/RxD1/SDA10/INTP1/TI09
P32				$\overline{\text{SCK10}}$/SCL10/INTP2
P40 [Note]	I/O	Port 4. 2-bit I/O port. Input/output can be specified in 1-bit units. Use of an on-chip pull-up resistor can be specified by a software setting.	Input port	TOOL0
P41				TOOL1
P50	I/O	Port 5. 3-bit I/O port. Input/output can be specified in 1-bit units. Use of an on-chip pull-up resistor can be specified by a software setting.	Input port	TI06/TO06
P51				TI07/TO07
P52				SLTI/SLTO
P60	I/O	Port 6. 2-bit I/O port. Output of P60 and P61 is N-ch open-drain output (6 V tolerance). Input/output can be specified in 1-bit units.	Input port	SCL0
P61				SDA0
P70	I/O	Port 7. 8-bit I/O port. Input of P71, P72, P74, and P75 can be set to TTL buffer. Output of P70, P72, P73, and P75 can be set to N-ch open-drain output (V_{DD} tolerance). Input/output can be specified in 1-bit units. Use of an on-chip pull-up resistor can be specified by a software setting.	Input port	SO01/INTP4
P71				SI01/INTP5
P72				$\overline{\text{SCK01}}$/INTP6
P73				SO00/TxD0/TO10
P74				SI00/RxD0/TI10
P75				$\overline{\text{SCK00}}$/TI11
P76				–
P77				–

Note If on-chip debugging is enabled by using an option byte, be sure to pull up the P40/TOOL0 pin externally (see **Caution** in **2.2.5 P40-P43 (port 4)**).

(1) Port functions (2/2): 78K0R/ID3

Function Name	I/O	Function	After Reset	Alternate Function
P80	I/O	Port 8. 4-bit I/O port. Inputs/output can be specified in 1-bit units. Inputs of P80 to P83 can be set as comparator inputs or programmable gain amplifier inputs.	Analog input	CMP0P/TMOFF0/ INTP3/PGAI
P81				CMP0M
P82				CMP1P/TMOFF1/ INTP7
P83				CMP1M
P120	I/O	Port 12. 1-bit I/O port and 4-bit input port. For only P120, input/output can be specified in 1-bit units. For only P120, use of an on-chip pull-up resistor can be specified by a software setting.	Input port	INTP0/EXLVI
P121	Input			X1
P122				X2/EXCLK
P123				XT1
P124				XT2
P140	Output	Port 14. 1-bit output port.	Output port	PCLBUZ0
P150 to P152	I/O	Port 15. 3-bit I/O port. Input/output can be specified in 1-bit units.	Digital input port	ANI8 to ANI10

(2) Non-port functions (1/3): 78K0R/ID3

Function Name	I/O	Function	After Reset	Alternate Function
ANI0 to ANI7	Input	A/D converter analog input	Digital input port	P20 to P27
ANI8 to ANI10				P150 to P152
CMP0M	Input	Input voltage on the (–) side of comparator 0	Analog input	P81
CMP0P	Input	Input voltage on the (+) side of comparator 0		P80/TMOFF0/ INTP3/PGAI
CMP1M	Input	Input voltage on the (–) side of comparator 1		P83
CMP1P	Input	Input voltage on the (+) side of comparator 1		P82/TMOFF1/INTP7
EXLVI	Input	Potential input for external low-voltage detection	Input port	P120/INTP0
INTP0	Input	External interrupt request input for which the valid edge (rising edge, falling edge, or both rising and falling edges) can be specified	Input port	P120/EXLVI
INTP1				P31/SI10/RxD1/ SDA10/TI09
INTP2				P32/$\overline{\text{SCK10}}$/SCL10
INTP3			Analog input	P80/CMP0P/ TMOFF0/PGAI
INTP4			Input port	P70/SO01
INTP5				P71/SI01
INTP6				P72/$\overline{\text{SCK01}}$
INTP7			Analog input	P82/CMP1P/TMOFF1
PCLBUZ0	Output	Clock output/buzzer output	Output port	P140
PGAI	Input	Programmable gain amplifier input	Input port	P80/CMP0P/ TMOFF0/INTP3
REGC	–	Connecting regulator output stabilization capacitance for internal operation. Connect to V_{SS} via a capacitor (0.47 to 1 μF).	–	–
$\overline{\text{RESET}}$	Input	System reset input	–	–
RxD0	Input	Serial data input to UART0	Input port	P74/SI00/TI10
RxD1		Serial data input to UART1		P31/SI10/SDA10/ INTP1/TI09
$\overline{\text{SCK00}}$	Input	Clock input/output for CSI00, CSI01, and CSI10	Input port	P75/TI11
$\overline{\text{SCK01}}$				P72/INTP6
$\overline{\text{SCK10}}$				P32/SCL10/INTP2
SCL0	I/O	Clock input/output for I^2C	Input port	P60
SCL10	I/O	Clock input/output for simplified I^2C	Input port	P32/$\overline{\text{SCK10}}$/INTP2
SDA0	I/O	Serial data I/O for I^2C	Input port	P61
SDA10		Serial data I/O for simplified I^2C	Input port	P31/SI10/RxD1/ INTP1/TI09
SI00	Input	Serial data input to CSI00, CSI01, and CSI10	Input port	P74/RxD0/TI10
SI01				P71/INTP5
SI10				P31/RxD1/SDA10/ INTP1/TI09

(2) Non-port functions (2/3): 78K0R/ID3

Function Name	I/O	Function	After Reset	Alternate Function
SLTI	Input	16-bit timer 00, 01, 08, 09, 10, 11 input	Input port	P52/SLTO
SLTO	Output	16-bit timer 00, 01, 08, 09, 10, 11 output	Input port	P52/SLTI
SO00	Output	Serial data output from CSI00, CSI01, and CSI10	Input port	P73/TxD0/TO10
SO01				P70/INTP4
SO10				P30/TxD1/TO11
TI00	Input	External input to 16-bit timer 00	Input port	P00
TI02		External input to 16-bit timer 02		P10/TO02
TI03		External input to 16-bit timer 03		P11/TO03
TI04		External input to 16-bit timer 04		P12/TO04
TI05		External input to 16-bit timer 05		P13/TO05
TI06		External input to 16-bit timer 06		P50/TO06
TI07		External input to 16-bit timer 07		P51/TO07
TI09		External input to 16-bit timer 09		P31/RxD1/SDA10/INTP1
TI10		External input to 16-bit timer 10		P74/SI00/RxD0
TI11		External input to 16-bit timer 11		P75/$\overline{\text{SCK00}}$
TMOFF0	Input	Timer output pin (TO02 to TO07) Hi-Z control input	Analog input	P80/CMP0P/INTP3/PGAI
TMOFF1				P82/CMP1P/INTP7
TO00	Output	16-bit timer 00 output	Input port	P01
TO02		16-bit timer 02 output		P10/TI02
TO03		16-bit timer 03 output		P11/TI03
TO04		16-bit timer 04 output		P12/TI04
TO05		16-bit timer 05 output		P13/TI05
TO06		16-bit timer 06 output		P50/TI06
TO07		16-bit timer 07 output		P51/TI07
TO10		16-bit timer 10 output		P73/SO00/TxD0
TO11		16-bit timer 11 output		P30/SO10/TxD1
TxD0	Output	Serial data output from UART0	Input port	P73/SO00/TO10
TxD1		Serial data output from UART1		P30/SO10/TO11
X1	–	Resonator connection for main system clock	Input port	P121
X2	–		Input port	P122/EXCLK
EXCLK	Input	External clock input for main system clock	Input port	P122/X2
XT1	–	Resonator connection for subsystem clock	Input port	P123
XT2	–		Input port	P124

(2) Non-port functions (3/3): 78K0R/ID3

Function Name	I/O	Function	After Reset	Alternate Function
V_{DD}	–	Positive power supply (P20 to P27, P80 to P83, P150 to P152 and other than ports	–	–
AV_{REF}	–	• A/D converter and comparator reference voltage input • Positive power supply for P20 to P27, P80 to P83, P150 to P152, A/D converter, programmable gain amplifier, and comparator	–	–
V_{SS}	–	Ground potential (P20 to P27, P80 to P83, P150 to P152 and other than ports)	–	–
AV_{SS}	–	Ground potential for A/D converter, programmable gain amplifier, comparator, P20 to P27, P80 to P83, P150 to P152.	–	–
FLMD0	–	Flash memory programming mode setting	–	–
TOOL0	I/O	Data I/O for flash memory programmer/debugger	Input port	P40
TOOL1	Output	Clock output for debugger	Input port	P41

2.1.4 78K0R/IE3

(1) Port functions (1/2): 78K0R/IE3

Function Name	I/O	Function	After Reset	Alternate Function
P00	I/O	Port 0. 2-bit I/O port. Input/output can be specified in 1-bit units. Use of an on-chip pull-up resistor can be specified by a software setting.	Input port	TI00
P01				TO00
P10	I/O	Port 1. 8-bit I/O port. Input/output can be specified in 1-bit units. Use of an on-chip pull-up resistor can be specified by a software setting.	Input port	TI02/TO02
P11				TI03/TO03
P12				TI04/TO04
P13				TI05/TO05
P14				TI06/TO06
P15				TI07/TO07
P16				TI08/TO08
P17				TI09/TO09
P20 to P27	I/O	Port 2. 8-bit I/O port. Input/output can be specified in 1-bit units.	Digital input port	ANI0 to ANI7
P30	I/O	Port 3. 4-bit I/O port. Input of P31 and P32 can be set to TTL buffer. Output of P30 to P32 can be set to N-ch open-drain output (V_{DD} tolerance). Input/output can be specified in 1-bit units. Use of an on-chip pull-up resistor can be specified by a software setting.	Input port	SO10/TxD1/TO11
P31				SI10/RxD1/SDA10/INTP1
P32				$\overline{\text{SCK10}}$/SCL10/INTP2
P33				–
P40[Note]	I/O	Port 4. 4-bit I/O port. Input/output can be specified in 1-bit units. Use of an on-chip pull-up resistor can be specified by a software setting.	Input port	TOOL0
P41				TOOL1
P42				–
P43				–
P50	I/O	Port 5. 4-bit I/O port. Input/output can be specified in 1-bit units. Use of an on-chip pull-up resistor can be specified by a software setting.	Input port	–
P51				–
P52				SLTI/SLTO
P53				–
P60	I/O	Port 6. 2-bit I/O port. Output of P60 and P61 is N-ch open-drain output (6 V tolerance). Input/output can be specified in 1-bit units.	Input port	SCL0
P61				SDA0

Note If on-chip debugging is enabled by using an option byte, be sure to pull up the P40/TOOL0 pin externally (see **Caution** in **2.2.5 P40-P43 (port 4)**).

(1) Port functions (2/2): 78K0R/IE3

Function Name	I/O	Function	After Reset	Alternate Function
P70	I/O	Port 7. 8-bit I/O port. Input of P71, P72, P74, and P75 can be set to TTL buffer. Output of P70, P72, P73, and P75 can be set to N-ch open-drain output (V_{DD} tolerance). Input/output can be specified in 1-bit units. Use of an on-chip pull-up resistor can be specified by a software setting.	Input port	SO01/INTP4
P71				SI01/INTP5
P72				$\overline{\text{SCK01}}$/INTP6
P73				SO00/TxD0/TO10
P74				SI00/RxD0/TI10
P75				$\overline{\text{SCK00}}$/TI11
P76				–
P77				–
P80	I/O	Port 8. 4-bit I/O port. Inputs/output can be specified in 1-bit units. Inputs of P80 to P83 can be set as comparator inputs or programmable gain amplifier inputs.	Analog input	CMP0P/TMOFF0/ INTP3/PGAI
P81				CMP0M
P82				CMP1P/TMOFF1/ INTP7
P83				CMP1M
P120	I/O	Port 12. 1-bit I/O port and 4-bit input port. For only P120, input/output can be specified in 1-bit units. For only P120, use of an on-chip pull-up resistor can be specified by a software setting.	Input port	INTP0/EXLVI
P121	Input			X1
P122				X2/EXCLK
P123				XT1
P124				XT2
P140	Output	Port 14. 1-bit output port and 1-bit I/O port. For only P141, input/output can be specified in 1-bit units. For only P141, use of an on-chip pull-up resistor can be specified by a software setting.	Output port	PCLBUZ0
P141	I/O		Input port	PCLBUZ1
P150 to P153	I/O	Port 15. 4-bit I/O port. Input/output can be specified in 1-bit units.	Digital input port	ANI8 to ANI11

(2) Non-Port functions (1/3): 78K0R/IE3

Function Name	I/O	Function	After Reset	Alternate Function
ANI0 to ANI7	Input	A/D converter analog input	Digital input port	P20 to P27
ANI8 to ANI11				P150 to P153
CMP0M	Input	Input voltage on the (–) side of comparator 0	Analog input	P81
CMP0P	Input	Input voltage on the (+) side of comparator 0		P80/TMOFF0/ INTP3/PGAI
CMP1M	Input	Input voltage on the (–) side of comparator 1		P83
CMP1P	Input	Input voltage on the (+) side of comparator 1		P82/TMOFF1/INTP7
EXLVI	Input	Potential input for external low-voltage detection	Input port	P120/INTP0
INTP0	Input	External interrupt request input for which the valid edge (rising edge, falling edge, or both rising and falling edges) can be specified	Input port	P120/EXLVI
INTP1				P31/SI10/RxD1/ SDA10
INTP2				P32/$\overline{\text{SCK10}}$/SCL10
INTP3			Analog input	P80/CMP0P/ TMOFF0/PGAI
INTP4			Input port	P70/SO01
INTP5				P71/SI01
INTP6				P72/$\overline{\text{SCK01}}$
INTP7			Analog input	P82/CMP1P/TMOFF1
PCLBUZ0	Output	Clock output/buzzer output	Output port	P140
PCLBUZ1			Input port	P141
PGAI	Input	Programmable gain amplifier input	Input port	P80/CMP0P/ TMOFF0/INTP3
REGC	–	Connecting regulator output stabilization capacitance for internal operation. Connect to V_{SS} via a capacitor (0.47 to 1 μF).	–	–
$\overline{\text{RESET}}$	Input	System reset input	–	–
RxD0	Input	Serial data input to UART0	Input port	P74/SI00/TI10
RxD1		Serial data input to UART1		P31/SI10/SDA10/ INTP1
$\overline{\text{SCK00}}$	Input	Clock input/output for CSI00, CSI01, and CSI10	Input port	P75/TI11
$\overline{\text{SCK01}}$				P72/INTP6
$\overline{\text{SCK10}}$				P32/SCL10/INTP2
SCL0	Input	Clock input/output for I^2C	Input port	P60
SCL10	Input	Clock input/output for simplified I^2C	Input port	P32/$\overline{\text{SCK10}}$/INTP2
SDA0	Input	Serial data I/O for I^2C	Input port	P61
SDA10		Serial data I/O for simplified I^2C	Input port	P31/SI10/RxD1/ INTP1
SI00	Input	Serial data input to CSI00, CSI01, and CSI10	Input port	P74/RxD0/TI10
SI01				P71/INTP5
SI10				P31/RxD1/SDA10/ INTP1

(2) Non-Port functions (2/3): 78K0R/IE3

Function Name	I/O	Function	After Reset	Alternate Function
SLTI	Input	16-bit timer 00, 01, 08, 09, 10, 11 input	Input port	P52/SLTO
SLTO	Output	16-bit timer 00, 01, 08, 09, 10, 11 output	Input port	P52/SLTI
SO00	Output	Serial data output from CSI00, CSI01, and CSI10	Input port	P73/TxD0/TO10
SO01				P70/INTP4
SO10				P30/TxD1/TO11
TI00	Input	External input to 16-bit timer 00	Input port	P00
TI02		External input to 16-bit timer 02		P10/TO02
TI03		External input to 16-bit timer 03		P11/TO03
TI04		External input to 16-bit timer 04		P12/TO04
TI05		External input to 16-bit timer 05		P13/TO05
TI06		External input to 16-bit timer 06		P14/TO06
TI07		External input to 16-bit timer 07		P15/TO07
TI08		External input to 16-bit timer 08		P16/TO08
TI09		External input to 16-bit timer 09		P17/TO09
TI10		External input to 16-bit timer 10		P74/SI00/RxD0
TI11		External input to 16-bit timer 11		P75/$\overline{\text{SCK00}}$
TMOFF0	Input	Timer output pin (TO02 to TO07) Hi-Z control input	Analog input	P80/CMP0P/INTP3/PGAI
TMOFF1				P82/CMP1P/INTP7
TO00	Output	16-bit timer 00 output	Input port	P01
TO02		16-bit timer 02 output		P10/TI02
TO03		16-bit timer 03 output		P11/TI03
TO04		16-bit timer 04 output		P12/TI04
TO05		16-bit timer 05 output		P13/TI05
TO06		16-bit timer 06 output		P14/TI06
TO07		16-bit timer 07 output		P15/TI07
TO08		16-bit timer 08 output		P16/TI08
TO09		16-bit timer 09 output		P17/TI09
TO10		16-bit timer 10 output		P73/SO00/TxD0
TO11		16-bit timer 11 output		P30/SO10/TxD1
TxD0	Output	Serial data output from UART0	Input port	P73/SO00/TO10
TxD1		Serial data output from UART1		P30/SO10/TO11
X1	–	Resonator connection for main system clock	Input port	P121
X2	–		Input port	P122/EXCLK
EXCLK	Input	External clock input for main system clock	Input port	P122/X2
XT1	–	Resonator connection for subsystem clock	Input port	P123
XT2	–		Input port	P124
V_{DD}	–	Positive power supply (P121 to P124 and other than ports (excluding RESET pin and FLMD0 pin))	–	–
EV_{DD}	–	Positive power supply for ports (other than P20 to P27, P80 to P83, P150 to P153, and P121 to P124), $\overline{\text{RESET}}$ pin, and FLMD0 pin	–	–

(2) Non-Port functions (3/3): 78K0R/IE3

Function Name	I/O	Function	After Reset	Alternate Function
AV_{REF}	–	• A/D converter and comparator reference voltage input • Positive power supply for P20 to P27, P80 to P83, P150 to P153, A/D converter, programmable gain amplifier, and comparator	–	–
V_{SS}	–	Ground potential (P121 to P124 and other than ports (excluding RESET and FLMD0 pins))	–	–
EV_{SS}	–	Ground potential for ports (other than P20 to P27, P80 to P83, P150 to P153, and P121 to P124), RESET pin, and FLMD0 pin	–	–
AV_{SS}	–	Ground potential for A/D converter, programmable gain amplifier, comparator, P20 to P27, P80 to P83, and P150 to P153. Make AV_{SS} the same potential as EV_{SS} and V_{SS}.	–	–
FLMD0	–	Flash memory programming mode setting	–	–
TOOL0	I/O	Data I/O for flash memory programmer/debugger	Input port	P40
TOOL1	Output	Clock output for debugger	Input port	P41

2.2 Description of Pin Functions

Remark The pins mounted depend on the product. See **1.4 Pin Configuration (Top View)** and **2.1 Pin Function List**.

2.2.1 P00, P01 (port 0)

P00 and P01 function as I/O port. These pins also function as timer I/O.

	78K0R/IB3	78K0R/IC3			78K0R/ID3	78K0R/IE3
		(38-pin)	(44-pin)	(48-pin)		
P00/TI00	–	–	–	–	√	√
P01/TO00	–	–	–	–	√	√

The following operation modes can be specified in 1-bit units.

(1) Port mode

P00 and P01 function as I/O port. P00 and P01 can be set to input or output port in 1-bit units using port mode register 0 (PM0). Use of an on-chip pull-up resistor can be specified by pull-up resistor option register 0 (PU0).

(2) Control mode

P00 and P01 function as timer I/O.

(a) TI00

This is the pin for inputting an external count clock/capture trigger to 16-bit timer 00.

(b) TO00

This is the timer output pin of 16-bit timer 00.

2.2.2 P10 to P17 (port 1)

P10 to P17 function as I/O port. These pins also function as timer I/O.

	78K0R/IB3	78K0R/IC3			78K0R/ID3	78K0R/IE3
		(38-pin)	(44-pin)	(48-pin)		
P10/TI02/TO02/ TxD0	√	P10/TI02/TO02 Note 1	P10/TI02/TO02 Note 1	P10/TI02/TO02 Note 1	P10/TI02/TO02 Note 1	P10/TI02/TO02 Note 1
P11/TI03/TO03/ RxD0	√	P11/TI03/TO03 Note 1	P11/TI03/TO03 Note 1	P11/TI03/TO03 Note 1	P11/TI03/TO03 Note 1	P11/TI03/TO03 Note 1
P12/TI04/TO04	√	√	√	√	√	√
P13/TI05/TO05	√	√	√	√	√	√
P14/TI06/TO06	– Note 2	– Note 2	– Note 2	– Note 2	– Note 2	√
P15/TI07/TO07	– Note 2	– Note 2	– Note 2	– Note 2	– Note 2	√
P16/TI08/TO08	–	–	–	–	–	√
P17/TI09/TO09	– Note 3	– Note 3	– Note 3	– Note 3	– Note 3	√

Notes 1. In the 38-pin products of the 78K0R/IC3, TxD0 and RxD0 are shared with P73 and P72, respectively. In the 44-pin products of the 78K0R/IC3 and in the 78K0R/ID3 and 78K0R/IE3, TxD0 and RxD0 are shared with P73 and P74, respectively.

2. TI06/TO06 and TI07/TO07 are shared with P50 and P51, respectively, in products other than the 78K0R/IE3.

3. TI09 is shared with P31, in products other than the 78K0R/IE3.

The following operation modes can be specified in 1-bit units.

(1) Port mode

P10 to P17 function as 8-bit I/O port. P10 to P17 can be set to input or output port in 1-bit units using port mode register 1 (PM1). Use of an on-chip pull-up resistor can be specified by pull-up resistor option register 1 (PU1).

(2) Control mode

P10 to P17 function as timer I/O and serial interface data I/O.

(a) TI02 to TI09

These are the pins for inputting an external count clock/capture trigger to 16-bit timers 02 to 09.

(b) TO02 to TO09

These are the timer output pins of 16-bit timers 02 to 09.

(c) TxD0

This is a serial data output pin of serial interface UART0.

(d) RxD0

This is a serial data input pin of serial interface UART0.

2.2.3 P20 to P27 (port 2)

P20 to P27 function as an 8-bit I/O port. These pins also function as A/D converter analog input.

	78K0R/IB3	78K0R/IC3			78K0R/ID3	78K0R/IE3
		(38-pin)	(44-pin)	(48-pin)		
P20/ANI0	√	√	√	√	√	√
P21/ANI1	√	√	√	√	√	√
P22/ANI2	√	√	√	√	√	√
P23/ANI3	√	√	√	√	√	√
P24/ANI4	√	√	√	√	√	√
P25/ANI5	√	√	√	√	√	√
P26/ANI6	–	√	√	√	√	√
P27/ANI7	–	√	√	√	√	√

The following operation modes can be specified in 1-bit units.

(1) Port mode

P20 to P27 function as I/O port. P20 to P27 can be set to input or output port in 1-bit units using port mode register 2 (PM2).

(2) Control mode

P20 to P27 function as A/D converter analog input pins (ANI0 to ANI7). When using these pins as analog input pins, see **12.6 (5) ANI0/P20 to ANI7/P27, ANI8/P150 to ANI11/P153**.

Caution ANI0/P20 to ANI7/P27 are set in the digital input (general-purpose port) mode after release of reset.

2.2.4 P30 to P33 (port 3)

P30 to P33 function as I/O port. These pins also function as serial interface data I/O, clock I/O, external interrupt request input, and timer I/O.

Input to the P30 and P31 pins can be specified through a normal input buffer or a TTL input buffer in 1-bit units, using port input mode register 3 (PIM3).

Output from the P30 to P32 pins can be specified as normal CMOS output or N-ch open-drain output (V_{DD} tolerance) in 1-bit units, using port output mode register 3 (POM3).

	78K0R/IB3	78K0R/IC3			78K0R/ID3	78K0R/IE3
		(38-pin)	(44-pin)	(48-pin)		
P30/SO10/TxD1/TO11	√	√	√	√	√	√
P31/SI10/RxD1/SDA10/INTP1/TI09	√	√	√	√	√	P31/SI10/RxD1/SDA10/INTP1 Note
P32/$\overline{\text{SCK10}}$/SCL10/INTP2	√	√	√	√	√	√
P33	–	–	–	–	–	√

Note TI09 is shared with P17, in the 78K0R/IE3.

The following operation modes can be specified in 1-bit units.

(1) Port mode

P30 to P33 function as I/O port. P30 to P33 can be set to input or output port in 1-bit units using port mode register 3 (PM3). Use of an on-chip pull-up resistor can be specified by pull-up resistor option register 3 (PU3).

(2) Control mode

P30 to P32 function as serial interface data I/O, clock I/O, external interrupt request input, and timer I/O.

(a) SI10

This is a serial data input pin of serial interface CSI10.

(b) SO10

This is a serial data output pin of serial interface CSI10.

(c) $\overline{\text{SCK10}}$

This is a serial clock I/O pin of serial interface CSI10.

(d) TxD1

This is a serial data output pin of serial interface UART1.

(e) RxD1

This is a serial data input pin of serial interface UART1.

(f) SDA10

This is a serial data I/O pin of serial interface for simplified I^2C.

(g) SCL10

This is a serial clock I/O pin of serial interface for simplified I^2C.

(h) INTP1, INTP2

These are the external interrupt request input pins for which the valid edge (rising edge, falling edge, or both rising and falling edges) can be specified.

(i) TO11

This is a timer output pin of 16-bit timer 11.

(j) TI09

There is the pin for inputting an external count clock/capture trigger to 16-bit timers 09.

2.2.5 P40 to P43 (port 4)

P40 to P43 function as I/O port. These pins also function as data I/O for a flash memory programmer/debugger and clock output.

	78K0R/IB3	78K0R/IC3			78K0R/ID3	78K0R/IE3
		(38-pin)	(44-pin)	(48-pin)		
P40/TOOL0	√	√	√	√	√	√
P41/TOOL1	√	√	√	√	√	√
P42	–	–	–	–	–	√
P43	–	–	–	–	–	√

The following operation modes can be specified in 1-bit units.

(1) Port mode

P40 to P43 function as I/O port. P40 to P43 can be set to input or output port in 1-bit units using port mode register 4 (PM4). Use of an on-chip pull-up resistor can be specified by pull-up resistor option register 4 (PU4).

Be sure to connect an external pull-up resistor to P40 when on-chip debugging is enabled (by using an option byte).

(2) Control mode

P40 and P41 function as data I/O for a flash memory programmer/debugger and clock output.

(a) TOOL0

This is a data I/O pin for a flash memory programmer/debugger.

Be sure to pull up this pin externally when on-chip debugging is enabled (pulling it down is prohibited).

(b) TOOL1

This is a clock output pin for a debugger.

When the on-chip debug function is used, P41/TOOL1 pin can be used as follows by the mode setting on the debugger.

1-line mode: can be used as a port (P41).

2-line mode: used as a TOOL1 pin and cannot be used as a port (P41).

Caution The function of the P40/TOOL0 pin varies as described in (a) to (c) below.
In the case of (b) or (c), make the specified connection.

(a) In normal operation mode and when on-chip debugging is disabled (OCDENSET = 0) by an option byte (000C3H)
=> Use this pin as a port pin (P40).

(b) In normal operation mode and when on-chip debugging is enabled (OCDENSET = 1) by an option byte (000C3H)
=> Connect this pin to V_{DD} via an external resistor, and always input a high level to the pin before reset release.

(c) When on-chip debug function is used, or in write mode of flash memory programmer
=> Use this pin as TOOL0.
Directly connect this pin to the on-chip debug emulator or a flash memory programmer, or pull it up by connecting it to V_{DD} via an external resistor.

2.2.6 P50 to P53 (port 5)

P50 to P53 function as I/O port. These pins also function as timer I/O.

	78K0R/IB3	78K0R/IC3			78K0R/ID3	78K0R/IE3
		(38-pin)	(44-pin)	(48-pin)		
P50/TI06/TO06	√	√	√	√	√	P50 Note
P51/TI07/TO07	√	√	√	√	√	P51 Note
P52/SLTI/SLTO	–	√	√	√	√	√
P53	–	–	–	–	–	√

Note TI06/TO06 and TI07/TO07 are shared with P14 and P15, in the 78K0R/IE3.

(1) Port mode

P50 to P53 function as I/O port. P50 to P53 can be set to input or output port in 1-bit units using port mode register 5 (PM5). Use of an on-chip pull-up resistor can be specified by pull-up resistor option register 5 (PU5).

(2) Control mode

P52 functions as timer I/O.

(a) TI06, TI07

These are the pins for inputting an external count clock/capture trigger to 16-bit timers 06 and 07.

(b) TO06, TO07

These are the timer output pins of 16-bit timers 06 and 07.

(c) SLTI

This is used as a pin for inputting an external count clock or a capture trigger to 16-bit timers 00, 01, 08, 09, 10, and 11, by setting the input switching control register (ISC).

(d) SLTO

This is used as a timer output pin of 16-bit timers 00, 01, 08, 09, 10, and 11, by setting the input switching control register (ISC).

2.2.7 P60 and P61 (port 6)

P60 and P61 function as I/O port. These pins also function as serial interface data I/O and clock I/O.

	78K0R/IB3	78K0R/IC3			78K0R/ID3	78K0R/IE3
		(38-pin)	(44-pin)	(48-pin)		
P60/SCL0	–	–	–	√	√	√
P61/SDA0	–	–	–	√	√	√

The following operation modes can be specified in 1-bit units.

(1) Port mode

P60 and P61 function as I/O port. P60 and P61 can be set to input port or output port in 1-bit units using port mode register 6 (PM6).

Output of P60 and P61 is N-ch open-drain output (6 V tolerance).

(2) Control mode

P60 and P61 function as serial interface data I/O and clock I/O.

(a) SDA0

This is a serial data I/O pin of serial interface IICA.

(b) SCL0

This is a serial clock I/O pin of serial interface IICA.

2.2.8 P70 to P77 (port 7)

P70 to P77 function as I/O port. These pins also function as serial interface data I/O, clock I/O, external interrupt request input, and timer I/O.

Input to the P71, P72, P74, and P75 pins can be specified through a normal input buffer or a TTL input buffer in 1-bit units, using port input mode register 7 (PIM7).

Output from the P70, P72, P73, and P75 pins can be specified as normal CMOS output or N-ch open-drain output (V_{DD} tolerance) in 1-bit units, using port output mode register 7 (POM7).

	78K0R/IB3	78K0R/IC3			78K0R/ID3	78K0R/IE3
		(38-pin)	(44-pin)	(48-pin)		
P70/SO01/INTP4	– Note 1	– Note 1	√	√	√	√
P71/SI01/INTP5	– Note 1	– Note 1	√	√	√	√
P72/$\overline{\text{SCK01}}$/INTP6	–	P72/INTP6/RxD0	√	√	√	√
P73/SO00/TxD0/TO10	– Note 2	P73/TxD0/TO10	√	√	√	√
P74/SI00/RxD0/TI10	– Note 2	– Note 3	√	√	√	√
P75/$\overline{\text{SCK00}}$/TI11	–	–	√	√	√	√
P76	–	–	–	–	√	√
P77	–	–	–	–	√	√

Notes 1. In the 78K0R/IB3 and the 38-pin products of the 78K0R/IC3, INTP4 and INTP5 are shared with P121 and P122, respectively.
2. In the 78K0R/IB3, TxD0 and RxD0 are shared with P10 and P11, respectively.
3. In the 38-pin products of the 78K0R/IC3, RxD0 is shared with P72.

The following operation modes can be specified in 1-bit units.

(1) Port mode

P70 to P77 function as I/O port. P70 to P77 can be set to input or output port in 1-bit units using port mode register 7 (PM7). Use of an on-chip pull-up resistor can be specified by pull-up resistor option register 7 (PU7).

(2) Control mode

P70 to P75 function as serial interface data I/O, clock I/O, external interrupt request input, and timer I/O.

(a) TI10, TI11

These are the pins for inputting an external count clock/capture trigger to 16-bit timers 10 and 11.

(b) TO10

This is a timer output pin of 16-bit timer 10.

(c) SI00, SI01

These are the serial data input pin of serial interface CSI00 and CSI01.

(d) SO00, SO01

These are the serial data output pin of serial interface CSI00 and CSI01.

(e) $\overline{\text{SCK00}}$, $\overline{\text{SCK01}}$

These are the serial clock I/O pins of serial interface CSI00 and CSI01.

(f) TxD0

This is a serial data output pin of serial interface UART0.

(g) RxD0

This is a serial data input pin of serial interface UART0.

(h) INTP4 to INTP6

These are the external interrupt request input pin for which the valid edge (rising edge, falling edge, or both rising and falling edges) can be specified.

2.2.9 P80 to P83 (port 8)

P80 to P83 function as I/O port. These pins also function as input voltages on the (+) side of comparators 0 and 1, input voltages on the (–) side of comparators 0 and 1, timer pin Hi-Z control inputs, external interrupt request inputs, and programmable gain amplifier inputs.

Inputs to the P80 to P83 pins must be enabled or disabled in 1-bit units using port input mode register 8 (PIM8).

	78K0R/IB3	78K0R/IC3			78K0R/ID3	78K0R/IE3
		(38-pin)	(44-pin)	(48-pin)		
P80/CMP0P/ TMOFF0/ INTP3/PGAI	√	√	√	√	√	√
P81/CMP0M	√	√	√	√	√	√
P82/CMP1P/ TMOFF1/INTP7	–	√	√	√	√	√
P83/CMP1M	√	√	√	√	√	√

The following operation modes can be specified in 1-bit units.

(1) Port mode

P80 to P83 function as I/O port. P80 to P83 can be set to input port or output port in 1-bit units using port mode register 8 (PM8).

(2) Control mode

P80 to P83 function as input voltages on the (+) side of comparators 0 and 1, input voltages on the (–) side of comparators 0 and 1, timer pin Hi-Z control inputs, external interrupt request inputs, and programmable gain amplifier inputs.

(a) CMP0P, CMP1P

These are the input voltage pins on the (+) sides of comparators 0 and 1.

(b) CMP0M, CMP1M

These are the input voltage pins on the (–) sides of comparators 0 and 1.

(c) TMOFF0, TMOFF1

These are the timer output pin (TO02 to TO07) Hi-Z control input pins.

(d) INTP3, INTP7

These are the external interrupt request input pin for which the valid edge (rising edge, falling edge, or both rising and falling edges) can be specified.

(e) PGAI

This is an programmable gain amplifier input pin.

2.2.10 P120 to P124 (port 12)

P120 functions as a 1-bit I/O port. P121 to P124 function as a 4-bit input port. These pins also function as external interrupt request input, potential input for external low-voltage detection, connecting resonator for main system clock, connecting resonator for subsystem clock, and external clock input for main system clock.

	78K0R/IB3	78K0R/IC3			78K0R/ID3	78K0R/IE3
		(38-pin)	(44-pin)	(48-pin)		
P120/INTP0/ EXLVI	√	√	√	√	√	√
P121/X1/INTP4	√	√	P121/X1 Note	P121/X1 Note	P121/X1 Note	P121/X1 Note
P122/X2/ EXCLK/INTP5	√	√	P122/X2/EXCLK Note	P122/X2/EXCLK Note	P122/X2/EXCLK Note	P122/X2/EXCLK Note
P123/XT1	–	√	√	√	√	√
P124/XT2	–	√	√	√	√	√

Note In products other than the 78K0R/IB3 and the 38-pin products of the 78K0R/IC3, INTP4 and INTP5 are shared with P70 and P71, respectively.

The following operation modes can be specified in 1-bit units.

(1) Port mode

P120 functions as a 1-bit I/O port. P120 can be set to input or output port using port mode register 12 (PM12). Use of an on-chip pull-up resistor can be specified by pull-up resistor option register 12 (PU12).

P121 to P124 function as a 4-bit input port.

(2) Control mode

P120 to P124 function as external interrupt request input, potential input for external low-voltage detection, connecting resonator for main system clock, connecting resonator for subsystem clock, and external clock input for main system clock.

(a) INTP0, INTP4, INTP5

This is an external interrupt request input pin for which the valid edge (rising edge, falling edge, or both rising and falling edges) can be specified.

(b) EXLVI

This is a potential input pin for external low-voltage detection.

(c) X1, X2

These are the pins for connecting a resonator for main system clock.

(d) XT1, XT2

These are the pins for connecting a resonator for subsystem clock.

(e) EXCLK

This is an external clock input pin for main system clock.

2.2.11 P140, P141 (port 14)

P140 functions as a 1-bit output port. P141 functions as a 1-bit I/O port. These pins also function as clock/buzzer output.

	78K0R/IB3	78K0R/IC3			78K0R/ID3	78K0R/IE3
		(38-pin)	(44-pin)	(48-pin)		
P140/PCLBUZ0	–	–	–	√	√	√
P141/PCLBUZ1	–	–	–	–	–	√

The following operation modes can be specified in 1-bit units.

(1) Port mode

P140 functions as a 1-bit output port.

P141 functions as a 1-bit I/O port. P141 can be set to input or output port in 1-bit units using port mode register 14 (PM14). Use of an on-chip pull-up resistor can be specified by pull-up resistor option register 14 (PU14).

(2) Control mode

P140 and P141 function as clock/buzzer output.

(a) PCLBUZ0, PCLBUZ1

These are the clock/buzzer output pins.

2.2.12 P150 to P153 (port 15)

P150 to P153 function as I/O port. These pins also function as A/D converter analog input.

	78K0R/IB3	78K0R/IC3			78K0R/ID3	78K0R/IE3
		(38-pin)	(44-pin)	(48-pin)		
P150/ANI8	–	–	√	√	√	√
P151/ANI9	–	–	√	√	√	√
P152/ANI10	–	–	–	√	√	√
P153/ANI11	–	–	–	–	–	√

The following operation modes can be specified in 1-bit units.

(1) Port mode

P150 to P153 function as I/O port. P150 to P153 can be set to input or output port in 1-bit units using port mode register 15 (PM15).

(2) Control mode

P150 to P153 function as A/D converter analog input pins (ANI8 to ANI11). When using these pins as analog input pins, see **12.6 (5) ANI0/P20 to ANI7/P27 and ANI8/P150 to ANI11/P153**.

Caution ANI8/P150 to ANI11/P153 are set in the digital input (general-purpose port) mode after release of reset.

2.2.13 AV_{REF}

This is the A/D converter and comparator reference voltage input pin and the positive power supply pin of P20 to P27, P150 to P153, P80 to P83, A/D converter, programmable gain amplifier, and comparator.

When all pins of port 2, port 15, and port 8 are used as the analog port pins, make the potential of AV_{REF} be such that $2.7\ V \leq AV_{REF} \leq V_{DD}$. When one or more of the pins of port 2, port 15, and port 8 are used as the digital port pins or when the A/D converter, programmable gain amplifier, and comparator are not used, make AV_{REF} the same potential as EV_{DD} and V_{DD}.

2.2.14 AV_{SS}

This is the ground potential pin of A/D converter, programmable gain amplifier, comparator, P20 to P27, P150 to P153, and P80 to P83. Even when the A/D converter, programmable gain amplifier, and comparator are not used, always use this pin with the same potential as EV_{SS} and V_{SS}.

2.2.15 $\overline{RESET}$

This is the active-low system reset input pin.

When the external reset pin is not used, connect this pin directly or via a resistor to EV_{DD}.

When the external reset pin is used, design the circuit based on V_{DD}.

2.2.16 REGC

This is the pin for connecting regulator output stabilization capacitance for internal operation. Connect this pin to V_{SS} via a capacitor (0.47 to 1 μF).

Also, use a capacitor with good characteristics, since it is used to stabilize internal voltage.

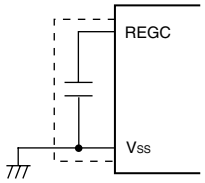

Caution Keep the wiring length as short as possible for the broken-line part in the above figure.

2.2.17 V_{DD}, EV_{DD}

V_{DD} is the positive power supply pin for P121 to P124 and other than ports (other than the $\overline{RESET}$ pin and FLMD0 pin) [Note].

EV_{DD} is the positive power supply pin for ports other than those of P20 to P27, P150 to P153, P80 to P83, and P121 to P124, as well as for the $\overline{RESET}$ pin and FLMD0 pin.

Note With products not provided with an EV_{DD} pin, use V_{DD} as the positive power supply pin for port pins other than P20 to P27, P150 to P153, and P80 to P83, as well as for pins other than those of ports.

2.2.18 V_{SS}, EV_{SS}

V_{SS} is the ground potential pin for P121 to P124 and other than ports (other than the $\overline{RESET}$ pin and FLMD0 pin) [Note].

EV_{SS} is the ground potential pin for ports other than those of P20 to P27, P150 to P153, P80 to P83, and P121 to P124, as well as for the $\overline{RESET}$ pin and FLMD0 pin.

Note With products not provided with an EV_{SS} pin, use V_{SS} as the ground potential pin for port pins other than P20 to P27, P150 to P153, and P80 to P83, as well as for pins other than those of ports.

2.2.19 FLMD0

This is a pin for setting flash memory programming mode.

Perform either of the following processing.

(a) In normal operation mode

It is recommended to leave this pin open during normal operation.

The FLMD0 pin must always be kept at the V_{SS} level before reset release but does not have to be pulled down externally because it is internally pulled down by reset. However, pulling it down must be kept selected (i.e., FLMDPUP = “0”, default value) by using bit 7 (FLMDPUP) of the background event control register (BECTL) (see **24.5 (1) Back ground event control register**). To pull it down externally, use a resistor of 200 kΩ or smaller.

Self programming and the rewriting of flash memory with the programmer can be prohibited using hardware, by directly connecting this pin to the V_{SS} pin.

(b) In self programming mode

It is recommended to leave this pin open when using the self programming function. To pull it down externally, use a resistor of 100 kΩ to 200 kΩ.

In the self programming mode, the setting is switched to pull up in the self programming library.

(c) In flash memory programming mode

Directly connect this pin to a flash memory programmer when data is written by the flash memory programmer. This supplies a writing voltage of the V_{DD} level to the FLMD0 pin.

The FLMD0 pin does not have to be pulled down externally because it is internally pulled down by reset. To pull it down externally, use a resistor of 1 kΩ to 200 kΩ.

2.3 Pin I/O Circuits and Recommended Connection of Unused Pins

2.3.1 78K0R/IB3

Table 2-5 shows the types of pin I/O circuits and the recommended connections of unused pins.

Table 2-5. Connection of Unused Pins(78K0R/IB3) (1/2)

Pin Name	I/O Circuit Type	I/O	Recommended Connection of Unused Pins
P10/TI02/TO02/TxD0	8-R	I/O	Input: Independently connect to V_{DD} or V_{SS} via a resistor. Output: Leave open.
P11/TI03/TO03/RxD0			
P12/TI04/TO04			
P13/TI05/TO05			
P20/ANI0 to P25/ANI5 Note 1	11-G		Input: Independently connect to AV_{REF} or AV_{SS} via a resistor. Output: Leave open.
P30/SO10/TxD1/TO11	5-AG		Input: Independently connect to V_{DD} or V_{SS} via a resistor. Output: Leave open.
P31/SI10/RxD1/SDA10/INTP1/TI09	5-AN		<When N-ch open-drain> Output • Set the port output latch to 0: Leave open. • Set the port output latch to 1: Independently connect to V_{DD} or V_{SS} via a resistor.
P32/$\overline{\text{SCK10}}$/SCL10/INTP2			
P40/TOOL0	8-R		<When on-chip debugging is enabled> Pull this pin up (pulling it down is prohibited). <When on-chip debugging is disabled> Input: Independently connect to V_{DD} or V_{SS} via a resistor. Output: Leave open.
P41/TOOL1			Input: Independently connect to V_{DD} or V_{SS} via a resistor. Output: Leave open.
P50/TI06/TO06			
P51/TI07/TO07			
P80/CMP0P/TMOFF0/INTP3/PGAI Note 2	11-J		Input: Independently connect to AV_{REF} or AV_{SS} via a resistor. Output: Leave open.
P81/CMP0M Note 2	11-H		
P83/CMP1M Note 2			
P120/INTP0/EXLVI	8-R		Input: Independently connect to V_{DD} or V_{SS} via a resistor. Output: Leave open.
P121/X1/INTP4 Note 3	37-C	Input	Independently connect to V_{DD} or V_{SS} via a resistor.
P122/X2/EXCLK/INTP5 Note 3			

Notes 1. P25/ANI0 to P25/ANI5 are set in the digital input port mode after release of reset.

2. P80/CMP0P/TMOFF0/INTP3/PGAI, P81/CMP0M and P83/CMP1M are set in the analog input port mode after release of reset.

3. Use recommended connection above in input port mode (see **Figure 5-3 Format of Clock Operation Mode Control Register (CMC)**) when these pins are not used.

Table 2-5. Connection of Unused Pins(78K0R/IB3) (2/2)

Pin Name	I/O Circuit Type	I/O	Recommended Connection of Unused Pins
AV_{REF}	–	–	<When one or more of P20 to P25, or P80, P81, P83 are set as a digital port> Make this pin the same potential as V_{DD}. <When all of P20 to P25, and P80, P81, P83 are set as analog ports> Make this pin to have a potential where 2.7 V ≤ AV_{REF} ≤ V_{DD}.
AV_{SS}	–	–	Make this pin the same potential as the V_{SS}.
FLMD0	2-W	–	Leave open or connect to V_{SS} via a resistor of 100 kΩ or more.
$\overline{RESET}$	2	Input	Connect directly to V_{DD} or via a resistor.
REGC	–	–	Connect to V_{SS} via capacitor (0.47 to 1 μF).

2.3.2 78K0R/IC3

Table 2-6 to 2-8 shows the types of pin I/O circuits and the recommended connections of unused pins.

(1) 38-pin products

Table 2-6. Connection of Unused Pins(78K0R/IC3 38-pin products) (1/2)

Pin Name	I/O Circuit Type	I/O	Recommended Connection of Unused Pins
P10/TI02/TO02	8-R	I/O	Input: Independently connect to V_{DD} or V_{SS} via a resistor. Output: Leave open.
P11/TI03/TO03			
P12/TI04/TO04			
P13/TI05/TO05			
P20/ANI0 to P27/ANI7 Note 1	11-G		Input: Independently connect to AV_{REF} or AV_{SS} via a resistor. Output: Leave open.
P30/SO10/TxD1/TO11	5-AG		Input: Independently connect to V_{DD} or V_{SS} via a resistor. Output: Leave open. <When N-ch open-drain> Output • Set the port output latch to 0: Leave open. • Set the port output latch to 1: Independently connect to V_{DD} or V_{SS} via a resistor.
P31/SI10/RxD1/SDA10/INTP1/TI09	5-AN		
P32/$\overline{\text{SCK10}}$/SCL10/INTP2			
P40/TOOL0	8-R		<When on-chip debugging is enabled> Pull this pin up (pulling it down is prohibited). <When on-chip debugging is disabled> Input: Independently connect to V_{DD} or V_{SS} via a resistor. Output: Leave open.
P41/TOOL1			Input: Independently connect to V_{DD} or V_{SS} via a resistor. Output: Leave open.
P50/TI06/TO06			
P51/TI07/TO07			
P52/SLTI/SLTO			
P72/INTP6/RxD0	5-AN		
P73/TxD0/TO10	8-R		Input: Independently connect to V_{DD} or V_{SS} via a resistor. Output: Leave open. <When N-ch open-drain> Output • Set the port output latch to 0: Leave open. • Set the port output latch to 1: Independently connect to V_{DD} or V_{SS} via a resistor.
P80/CMP0P/TMOFF0/INTP3/PGAI Note 2	11-J		Input: Independently connect to AV_{REF} or AV_{SS} via a resistor. Output: Leave open.
P81/CMP0M Note 2	11-H		
P82/CMP1P/TOMOFF1/INTP7 Note 2	11-I		
P83/CMP1M Note 2	11-H		

Notes 1. P20/ANI0 to P27/ANI7 are set in the digital input port mode after release of reset.

2. P80/CMP0P/TMOFF0/INTP3/PGAI, P81/CMP0M, P82/CMP1P/TMOFF1/INTP7, P83/CMP1M are set in the analog input port mode after release of reset.

Table 2-6. Connection of Unused Pins(78K0R/IC3 38-pin products) (2/2)

Pin Name	I/O Circuit Type	I/O	Recommended Connection of Unused Pins
P120/INTP0/EXLVI	8-R	I/O	Input: Independently connect to V_{DD} or V_{SS} via a resistor. Output: Leave open.
P121/X1/INTP4 Note	37-C	Input	Independently connect to V_{DD} or V_{SS} via a resistor.
P122/X2/EXCLK/INTP5 Note			
P123/XT1 Note	37-B		
P124/XT2 Note			
AV_{REF}	–	–	<When one or more of P20 to P27, or P80 to P83 are set as a digital port> Make this pin the same potential as V_{DD}. <When all of P20 to P27, and P80 to P83 are set as analog ports> Make this pin to have a potential where 2.7 V ≤ AV_{REF} ≤ V_{DD}.
AV_{SS}	–	–	Make this pin the same potential as the V_{SS}.
FLMD0	2-W	–	Leave open or connect to V_{SS} via a resistor of 100 kΩ or more.
$\overline{RESET}$	2	Input	Connect directly to V_{DD} or via a resistor.
REGC	–	–	Connect to V_{SS} via capacitor (0.47 to 1 μF).

Note Use recommended connection above in input port mode (see **Figure 5-3 Format of Clock Operation Mode Control Register (CMC)**) when these pins are not used.

(2) 44-pin products

Table 2-7. Connection of Unused Pins(78K0R/IC3 44-pin products) (1/3)

Pin Name	I/O Circuit Type	I/O	Recommended Connection of Unused Pins
P10/TI02/TO02	8-R	I/O	Input: Independently connect to V_{DD} or V_{SS} via a resistor. Output: Leave open.
P11/TI03/TO03			
P12/TI04/TO04			
P13/TI05/TO05			
P20/ANI0 to P27/ANI7 [Note]	11-G		Input: Independently connect to AV_{REF} or AV_{SS} via a resistor. Output: Leave open.
P30/SO10/TxD1/TO11	5-AG		Input: Independently connect to V_{DD} or V_{SS} via a resistor. Output: Leave open. <When N-ch open-drain> Output • Set the port output latch to 0: Leave open. • Set the port output latch to 1: Independently connect to V_{DD} or V_{SS} via a resistor.
P31/SI10/RxD1/SDA10/INTP1/TI09	5-AN		
P32/$\overline{\text{SCK10}}$/SCL10/INTP2			
P40/TOOL0	8-R		<When on-chip debugging is enabled> Pull this pin up (pulling it down is prohibited). <When on-chip debugging is disabled> Input: Independently connect to V_{DD} or V_{SS} via a resistor. Output: Leave open.
P41/TOOL1			Input: Independently connect to V_{DD} or V_{SS} via a resistor. Output: Leave open.
P50/TI06/TO06			
P51/TI07/TO07			
P52/SLTI/SLTO			
P70/SO01/INTP4	8-R		Input: Independently connect to V_{DD} or V_{SS} via a resistor. Output: Leave open. <When N-ch open-drain> Output • Set the port output latch to 0: Leave open. • Set the port output latch to 1: Independently connect to V_{DD} or V_{SS} via a resistor.

Note P20/ANI0 to P27/ANI7 are set in the digital input port mode after release of reset.

Table 2-7. Connection of Unused Pins(78K0R/IC3 44-pin products) (2/3)

Pin Name	I/O Circuit Type	I/O	Recommended Connection of Unused Pins
P71/SI01/INTP5	5-AN	I/O	Input: Independently connect to V_{DD} or V_{SS} via a resistor. Output: Leave open.
P72/$\overline{\text{SCK01}}$/INTP6			Input: Independently connect to V_{DD} or V_{SS} via a resistor. Output: Leave open. <When N-ch open-drain> Output • Set the port output latch to 0: Leave open. • Set the port output latch to 1: Independently connect to V_{DD} or V_{SS} via a resistor.
P73/SO00/TxD0/TO10	8-R		
P74/SI00/RxD0/TI10	5-AN		Input: Independently connect to V_{DD} or V_{SS} via a resistor. Output: Leave open.
P75/$\overline{\text{SCK00}}$/TI11			Input: Independently connect to V_{DD} or V_{SS} via a resistor. Output: Leave open. <When N-ch open-drain> Output • Set the port output latch to 0: Leave open. • Set the port output latch to 1: Independently connect to V_{DD} or V_{SS} via a resistor.
P80/CMP0P/TMOFF0/INTP3/PGAI [Note 1]	11-J		Input: Independently connect to AV_{REF} or AV_{SS} via a resistor. Output: Leave open.
P81/CMP0M [Note 1]	11-H		
P82/CMP1P/TOMOFF1/INTP7 [Note 1]	11-I		
P83/CMP1M [Note 1]	11-H		
P120/INTP0/EXLVI	8-R		Input: Independently connect to V_{DD} or V_{SS} via a resistor. Output: Leave open.
P121/X1 [Note 2]	37-C	Input	Independently connect to V_{DD} or V_{SS} via a resistor.
P122/X2/EXCLK [Note 2]			
P123/XT1 [Note 2]	37-B		
P124/XT2 [Note 2]			
P150/ANI8, P151/ANI9 [Note 3]	11-G	I/O	Input: Independently connect to AV_{REF} or AV_{SS} via a resistor. Output: Leave open.

Notes 1. P80/CMP0P/TMOFF0/INTP3/PGAI, P81/CMP0M, P82/CMP1P/TMOFF1/INTP7, P83/CMP1M are set in the analog input port mode after release of reset.

2. Use recommended connection above in input port mode (see **Figure 5-3 Format of Clock Operation Mode Control Register (CMC)**) when these pins are not used.

3. P150/ANI8 and P151/ANI9 are set in the digital input port mode after release of reset.

Table 2-7. Connection of Unused Pins(78K0R/IC3 44-pin products) (3/3)

Pin Name	I/O Circuit Type	I/O	Recommended Connection of Unused Pins
AV_{REF}	–	–	<When one or more of P20 to P27, P150, P151, or P80 to P83 are set as a digital port> Make this pin the same potential as V_{DD}. <When all of P20 to P27, P150, P151, and P80 to P83 are set as analog ports> Make this pin to have a potential where 2.7 V ≤ AV_{REF} ≤ V_{DD}.
AV_{SS}	–	–	Make this pin the same potential as the V_{SS}.
FLMD0	2-W	–	Leave open or connect to V_{SS} via a resistor of 100 kΩ or more.
$\overline{RESET}$	2	Input	Connect directly to V_{DD} or via a resistor.
REGC	–	–	Connect to V_{SS} via capacitor (0.47 to 1 μF).

(3) 48-pin products

Table 2-8. Connection of Unused Pins(78K0R/IC3 48-pin products) (1/3)

Pin Name	I/O Circuit Type	I/O	Recommended Connection of Unused Pins
P10/TI02/TO02	8-R	I/O	Input: Independently connect to V_{DD} or V_{SS} via a resistor. Output: Leave open.
P11/TI03/TO03			
P12/TI04/TO04			
P13/TI05/TO05			
P20/ANI0 to P27/ANI7 [Note]	11-G		Input: Independently connect to AV_{REF} or AV_{SS} via a resistor. Output: Leave open.
P30/SO10/TxD1/TO11	5-AG		Input: Independently connect to V_{DD} or V_{SS} via a resistor. Output: Leave open. <When N-ch open-drain> Output • Set the port output latch to 0: Leave open. • Set the port output latch to 1: Independently connect to V_{DD} or V_{SS} via a resistor.
P31/SI10/RxD1/SDA10/INTP1/TI09	5-AN		
P32/$\overline{\text{SCK10}}$/SCL10/INTP2			
P40/TOOL0	8-R		<When on-chip debugging is enabled> Pull this pin up (pulling it down is prohibited). <When on-chip debugging is disabled> Input: Independently connect to V_{DD} or V_{SS} via a resistor. Output: Leave open.
P41/TOOL1			Input: Independently connect to V_{DD} or V_{SS} via a resistor. Output: Leave open.
P50/TI06/TO06			
P51/TI07/TO07			
P52/SLTI/SLTO			
P60/SCL0	13-R		Input: Independently connect to V_{DD} or V_{SS} via a resistor. Output • Set the port output latch to 0: Leave open. • Set the port output latch to 1: Independently connect to V_{DD} or V_{SS} via a resistor.
P61/SDA0			
P70/SO01/INTP4	8-R		Input: Independently connect to V_{DD} or V_{SS} via a resistor. Output: Leave open. <When N-ch open-drain> Output • Set the port output latch to 0: Leave open. • Set the port output latch to 1: Independently connect to V_{DD} or V_{SS} via a resistor.

Note P20/ANI0 to P27/ANI7 are set in the digital input port mode after release of reset.

Table 2-8. Connection of Unused Pins(78K0R/IC3 48-pin products) (2/3)

Pin Name	I/O Circuit Type	I/O	Recommended Connection of Unused Pins
P71/SI01/INTP5	5-AN	I/O	Input: Independently connect to V_{DD} or V_{SS} via a resistor. Output: Leave open.
P72/$\overline{\text{SCK01}}$/INTP6			Input: Independently connect to V_{DD} or V_{SS} via a resistor. Output: Leave open. <When N-ch open-drain> Output • Set the port output latch to 0: Leave open. • Set the port output latch to 1: Independently connect to V_{DD} or V_{SS} via a resistor.
P73/SO00/TxD0/TO10	8-R		
P74/SI00/RxD0/TI10	5-AN		Input: Independently connect to V_{DD} or V_{SS} via a resistor. Output: Leave open.
P75/$\overline{\text{SCK00}}$/TI11			Input: Independently connect to V_{DD} or V_{SS} via a resistor. Output: Leave open. <When N-ch open-drain> Output • Set the port output latch to 0: Leave open. • Set the port output latch to 1: Independently connect to V_{DD} or V_{SS} via a resistor.
P80/CMP0P/TMOFF0/INTP3/PGAI Note 1	11-J		Input: Independently connect to AV_{REF} or AV_{SS} via a resistor. Output: Leave open.
P81/CMP0M Note 1	11-H		
P82/CMP1P/TMOFF1/INTP7 Note 1	11-I		
P83/CMP1M Note 1	11-H		
P120/INTP0/EXLVI	8-R		Input: Independently connect to V_{DD} or V_{SS} via a resistor. Output: Leave open.
P121/X1 Note 2	37-C	Input	Independently connect to V_{DD} or V_{SS} via a resistor.
P122/X2/EXCLK Note 2			
P123/XT1 Note 2	37-B		
P124/XT2 Note 2			
P140/PCLBUZ0	3-C	Output	Leave open.
P150/ANI8 to P152/ANI10 Note 3	11-G	I/O	Input: Independently connect to AV_{REF} or AV_{SS} via a resistor. Output: Leave open.

Notes 1. P80/CMP0P/TMOFF0/INTP3/PGAI, P81/CMP0M, P82/CMP1P/TMOFF1/INTP7, and P83/CMP1M are set in the analog input port mode after release of reset.

2. Use recommended connection above in input port mode (see **Figure 5-3 Format of Clock Operation Mode Control Register (CMC)**) when these pins are not used.

2. P150/ANI8 to P152/ANI10 are set in the digital input port mode after release of reset.

Table 2-8. Connection of Unused Pins(78K0R/IC3 48-pin products) (3/3)

Pin Name	I/O Circuit Type	I/O	Recommended Connection of Unused Pins
AV_{REF}	–	–	<When one or more of P20 to P27, P150 to P152, or P80 to P83 are set as a digital port> Make this pin the same potential as V_{DD}. <When all of P20 to P27, P150 to P152, and P80 to P83 are set as analog ports> Make this pin to have a potential where 2.7 V ≤ AV_{REF} ≤ V_{DD}.
AV_{SS}	–	–	Make this pin the same potential as the V_{SS}.
FLMD0	2-W	–	Leave open or connect to V_{SS} via a resistor of 100 kΩ or more.
$\overline{RESET}$	2	Input	Connect directly to V_{DD} or via a resistor.
REGC	–	–	Connect to V_{SS} via capacitor (0.47 to 1 μF).

2.3.3 78K0R/ID3

Table 2-9 show the types of pin I/O circuits and the recommended connections of unused pins.

Table 2-9. Connection of Unused Pins (78K0R/ID3) (1/3)

Pin Name	I/O Circuit Type	I/O	Recommended Connection of Unused Pins
P00/TI00	8-R	I/O	Input: Independently connect to V_{DD} or V_{SS} via a resistor. Output: Leave open.
P01/TO00	5-AG		
P10/TI02/TO02	8-R		
P11/TI03/TO03			
P12/TI04/TO04			
P13/TI05/TO05			
P20/ANI0 to P27/ANI7 [Note]	11-G		Input: Independently connect to AV_{REF} or AV_{SS} via a resistor. Output: Leave open.
P30/SO10/TxD1/TO11	5-AG		Input: Independently connect to V_{DD} or V_{SS} via a resistor. Output: Leave open.
P31/SI10/RxD1/SDA10/INTP1/TI09	5-AN		<When N-ch open-drain> Output • Set the port output latch to 0: Leave open. • Set the port output latch to 1: Independently connect to V_{DD} or V_{SS} via a resistor.
P32/$\overline{\text{SCK10}}$/SCL10/INTP2			
P40/TOOL0	8-R		<When on-chip debugging is enabled> Pull this pin up (pulling it down is prohibited). <When on-chip debugging is disabled> Input: Independently connect to V_{DD} or V_{SS} via a resistor. Output: Leave open.
P41/TOOL1			Input: Independently connect to V_{DD} or V_{SS} via a resistor. Output: Leave open.
P50/TI06/TO06			
P51/TI07/TO07			
P52/SLTI/SLTO			

Note P20/ANI0 to P27/ANI7 are set in the digital input port mode after release of reset.

Table 2-9. Connection of Unused Pins (78K0R/ID3) (2/3)

Pin Name	I/O Circuit Type	I/O	Recommended Connection of Unused Pins
P60/SCL0	13-R	I/O	Input: Independently connect to V_{DD} or V_{SS} via a resistor. Output • Set the port output latch to 0: Leave open. • Set the port output latch to 1: Independently connect to V_{DD} or V_{SS} via a resistor.
P61/SDA0			
P70/SO01/INTP4	8-R		Input: Independently connect to V_{DD} or V_{SS} via a resistor. Output: Leave open. <When N-ch open-drain> Output • Set the port output latch to 0: Leave open. • Set the port output latch to 1: Independently connect to V_{DD} or V_{SS} via a resistor.
P71/SI01/INTP5	5-AN		Input: Independently connect to V_{DD} or V_{SS} via a resistor. Output: Leave open.
P72/$\overline{\text{SCK01}}$/INTP6			Input: Independently connect to V_{DD} or V_{SS} via a resistor. Output: Leave open. <When N-ch open-drain> Output • Set the port output latch to 0: Leave open. • Set the port output latch to 1: Independently connect to V_{DD} or V_{SS} via a resistor.
P73/SO00/TxD0/TO10	8-R		
P74/SI00/RxD0/TI10	5-AN		Input: Independently connect to V_{DD} or V_{SS} via a resistor. Output: Leave open.
P75/$\overline{\text{SCK00}}$/TI11			Input: Independently connect to V_{DD} or V_{SS} via a resistor. Output: Leave open. <When N-ch open-drain> Output • Set the port output latch to 0: Leave open. • Set the port output latch to 1: Independently connect to V_{DD} or V_{SS} via a resistor.
P76	8-R		Input: Independently connect to V_{DD} or V_{SS} via a resistor. Output: Leave open.
P77			
P80/CMP0P/TMOFF0/INTP3/PGAI Note	11-J		Input: Independently connect to AV_{REF} or AV_{SS} via a resistor. Output: Leave open.
P81/CMP0M Note	11-H		
P82/CMP1P/TOMOFF1/INTP7 Note	11-I		
P83/CMP1M Note	11-H		
P120/INTP0/EXLVI	8-R		Input: Independently connect to V_{DD} or V_{SS} via a resistor. Output: Leave open.

Note P80/CMP0P/TMOFF0/INTP3/PGAI, P81/CMP0M, P82/CMP1P/TMOFF1/INTP7, and P83/CMP1M are set in the analog input port mode after release of reset.

Table 2-9. Connection of Unused Pins (78K0R/ID3) (3/3)

Pin Name	I/O Circuit Type	I/O	Recommended Connection of Unused Pins
P121/X1[Note 1]	37-C	Input	Independently connect to V_{DD} or V_{SS} via a resistor.
P122/X2/EXCLK[Note 1]			
P123/XT1[Note 1]	37-B		
P124/XT2[Note 1]			
P140/PCLBUZ0	3-C	Output	Leave open.
P150/ANI8 to P152/ANI10[Note 2]	11-G	I/O	Input: Independently connect to AV_{REF} or AV_{SS} via a resistor. Output: Leave open.
AV_{REF}	–	–	<When one or more of P20 to P27, P150 to P152, or P80 to P83 are set as a digital port> Make this pin the same potential as V_{DD}. <When all of P20 to P27, P150 to P152, and P80 to P83 are set as analog ports> Make this pin to have a potential where $2.7\ V \leq AV_{REF} \leq V_{DD}$.
AV_{SS}	–	–	Make this pin the same potential as the V_{SS}.
FLMD0	2-W	–	Leave open or connect to V_{SS} via a resistor of 100 kΩ or more.
$\overline{RESET}$	2	Input	Connect directly to V_{DD} or via a resistor.
REGC	–	–	Connect to V_{SS} via capacitor (0.47 to 1 μF).

Notes 1. Use recommended connection above in input port mode (see **Figure 5-3 Format of Clock Operation Mode Control Register (CMC)**) when these pins are not used.

2. P150/ANI8 to P152/ANI10 are set in the digital input port mode after release of reset.

2.3.4 78K0R/IE3

Table 2-10 show the types of pin I/O circuits and the recommended connections of unused pins.

Table 2-10. Connection of Unused Pins (78K0R/IE3) (1/3)

Pin Name	I/O Circuit Type	I/O	Recommended Connection of Unused Pins
P00/TI00	8-R	I/O	Input: Independently connect to EV_{DD} or EV_{SS} via a resistor. Output: Leave open.
P01/TO00	5-AG		
P10/TI02/TO02	8-R		
P11/TI03/TO03			
P12/TI04/TO04			
P13/TI05/TO05			
P14/TI06/TO06			
P15/TI07/TO07			
P16/TI08/TO08			
P17/TI09/TO09			
P20/ANI0 to P27/ANI7 Note	11-G		Input: Independently connect to AV_{REF} or AV_{SS} via a resistor. Output: Leave open.
P30/SO10/TxD1/TO11	5-AG		Input: Independently connect to EV_{DD} or EV_{SS} via a resistor. Output: Leave open. <When N-ch open-drain> Output • Set the port output latch to 0: Leave open. • Set the port output latch to 1: Independently connect to EV_{DD} or EV_{SS} via a resistor.
P31/SI10/RxD1/SDA10/INTP1	5-AN		
P32/$\overline{SCK10}$/SCL10/INTP2			
P33	5-AG		Input: Independently connect to EV_{DD} or EV_{SS} via a resistor. Output: Leave open.
P40/TOOL0	8-R		<When on-chip debugging is enabled> Pull this pin up (pulling it down is prohibited). <When on-chip debugging is disabled> Input: Independently connect to EV_{DD} or EV_{SS} via a resistor. Output: Leave open.
P41/TOOL1			Input: Independently connect to EV_{DD} or EV_{SS} via a resistor. Output: Leave open.
P42	5-AG		
P43			
P50	8-R		
P51			
P52/SLTI/SLTO			
P53	5-AG		
P60/SCL0	13-R		Input: Independently connect to EV_{DD} or EV_{SS} via a resistor. Output • Set the port output latch to 0: Leave open. • Set the port output latch to 1: Independently connect to EV_{DD} or EV_{SS} via a resistor.
P61/SDA0			

Note P20/ANI0 to P27/ANI7 are set in the digital input port mode after release of reset.

Table 2-10. Connection of Unused Pins (78K0R/IE3) (2/3)

Pin Name	I/O Circuit Type	I/O	Recommended Connection of Unused Pins
P70/SO01/INTP4	8-R	I/O	Input: Independently connect to EV_{DD} or EV_{SS} via a resistor. Output: Leave open. <When N-ch open-drain> Output • Set the port output latch to 0: Leave open. • Set the port output latch to 1: Independently connect to EV_{DD} or EV_{SS} via a resistor.
P71/SI01/INTP5	5-AN		Input: Independently connect to EV_{DD} or EV_{SS} via a resistor. Output: Leave open.
P72/$\overline{\text{SCK01}}$/INTP6			Input: Independently connect to EV_{DD} or EV_{SS} via a resistor. Output: Leave open. <When N-ch open-drain> Output • Set the port output latch to 0: Leave open. • Set the port output latch to 1: Independently connect to EV_{DD} or EV_{SS} via a resistor.
P73/SO00/TxD0/TO10	8-R		
P74/SI00/RxD0/TI10	5-AN		Input: Independently connect to EV_{DD} or EV_{SS} via a resistor. Output: Leave open.
P75/$\overline{\text{SCK00}}$/TI11			Input: Independently connect to EV_{DD} or EV_{SS} via a resistor. Output: Leave open. <When N-ch open-drain> Output • Set the port output latch to 0: Leave open. • Set the port output latch to 1: Independently connect to EV_{DD} or EV_{SS} via a resistor.
P76	8-R		Input: Independently connect to EV_{DD} or EV_{SS} via a resistor. Output: Leave open.
P77			
P80/CMP0P/TMOFF0/INTP3/PGAI[Note]	11-J		Input: Independently connect to AV_{REF} or AV_{SS} via a resistor. Output: Leave open.
P81/CMP0M[Note]	11-H		
P82/CMP1P/TOMOFF1/INTP7[Note]	11-I		
P83/CMP1M[Note]	11-H		
P120/INTP0/EXLVI	8-R		Input: Independently connect to V_{DD} or V_{SS} via a resistor. Output: Leave open.

Note P80/CMP0P/TMOFF0/INTP3/PGAI, P81/CMP0M, P82/CMP1P/TMOFF1/INTP7, and P83/CMP1M are set in the analog input port mode after release of reset.

Table 2-10. Connection of Unused Pins (78K0R/IE3) (3/3)

Pin Name	I/O Circuit Type	I/O	Recommended Connection of Unused Pins
P121/X1[Note 1]	37-C	Input	Independently connect to V_{DD} or V_{SS} via a resistor.
P122/X2/EXCLK[Note 1]			
P123/XT1[Note 1]	37-B		
P124/XT2[Note 1]			
P140/PCLBUZ0	3-C	Output	Leave open.
P141/PCLBUZ1	5-AG	I/O	Input: Independently connect to EV_{DD} or EV_{SS} via a resistor. Output: Leave open.
P150/ANI8 to 53/ANI11[Note 2]	11-G		Input: Independently connect to AV_{REF} or AV_{SS} via a resistor. Output: Leave open.
AV_{REF}	–	–	<When one or more of P20 to P27, P150 to P153, or P80 to P83 are set as a digital port> Make this pin the same potential as EV_{DD} and V_{DD}. <When all of P20 to P27, P150 to P153, and P80 to P83 are set as analog ports> Make this pin to have a potential where $2.7\ V \leq AV_{REF} \leq V_{DD}$.
AV_{SS}	–	–	Make this pin the same potential as the EV_{SS} and V_{SS}.
FLMD0	2-W	–	Leave open or connect to V_{SS} via a resistor of 100 kΩ or more.
$\overline{RESET}$	2	Input	Connect directly to EV_{DD} or via a resistor.
REGC	–	–	Connect to V_{SS} via capacitor (0.47 to 1 μF).

Notes 1. Use recommended connection above in input port mode (see **Figure 5-3 Format of Clock Operation Mode Control Register (CMC)**) when these pins are not used.

2. P150/ANI8 to P153/ANI11 are set in the digital input port mode after release of reset.

Figure 2-1. Pin I/O Circuit List (1/3)

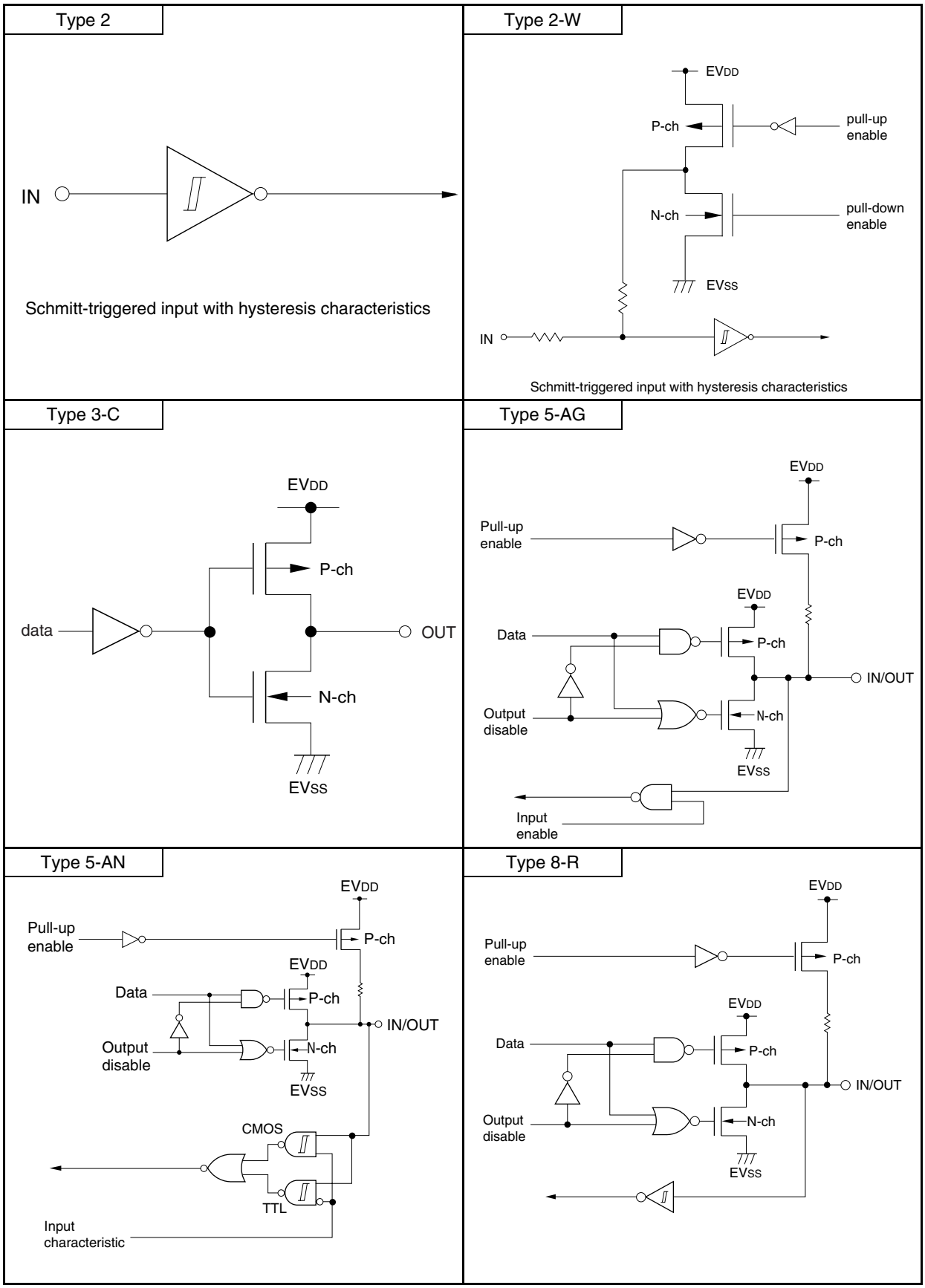

Remark With products not provided with an EV_{DD} or EV_{SS} pin, replace EV_{DD} with V_{DD}, or replace EV_{SS} with V_{SS}.

Figure 2-1. Pin I/O Circuit List (2/3)

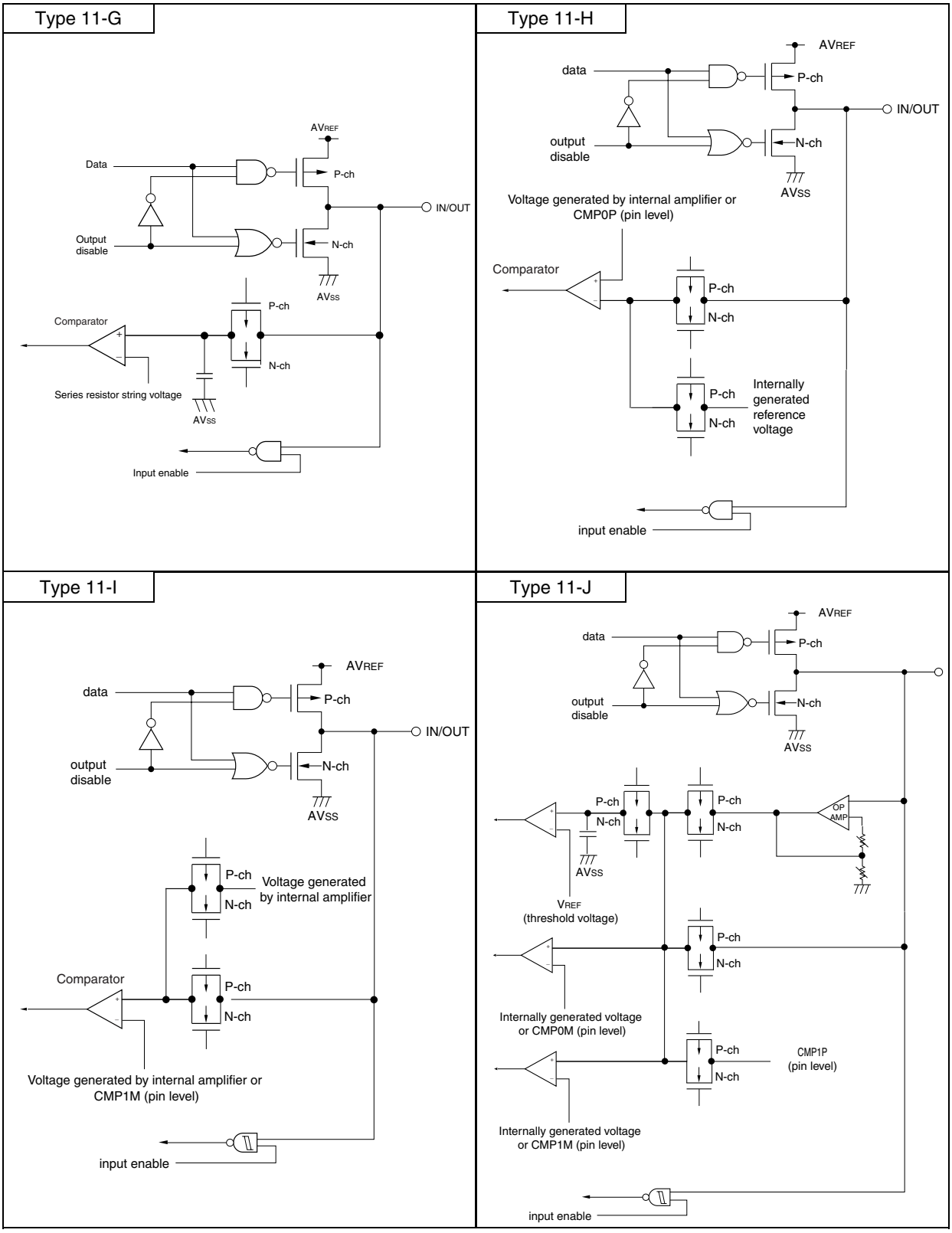

Figure 2-1. Pin I/O Circuit List (3/3)

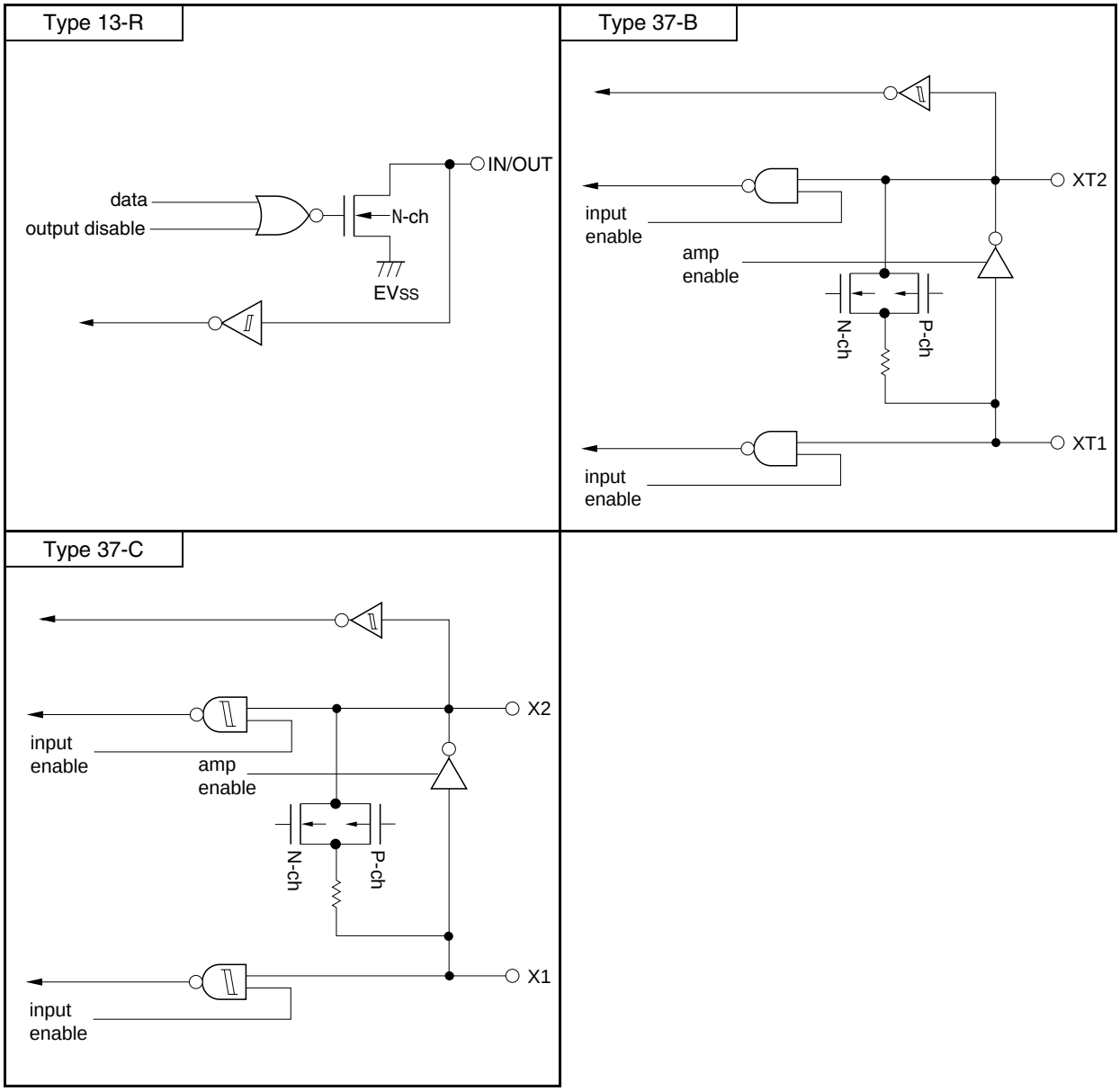

Remark With products not provided with an EV_{SS} pin, replace EV_{SS} with V_{SS}.

CHAPTER 3 CPU ARCHITECTURE

3.1 Memory Space

Products in the 78K0R/Ix3 can access a 1 MB memory space. Figures 3-1 to 3-4 show the memory maps.

Figure 3-1. Memory Map (μPD78F1201, 78F1211)

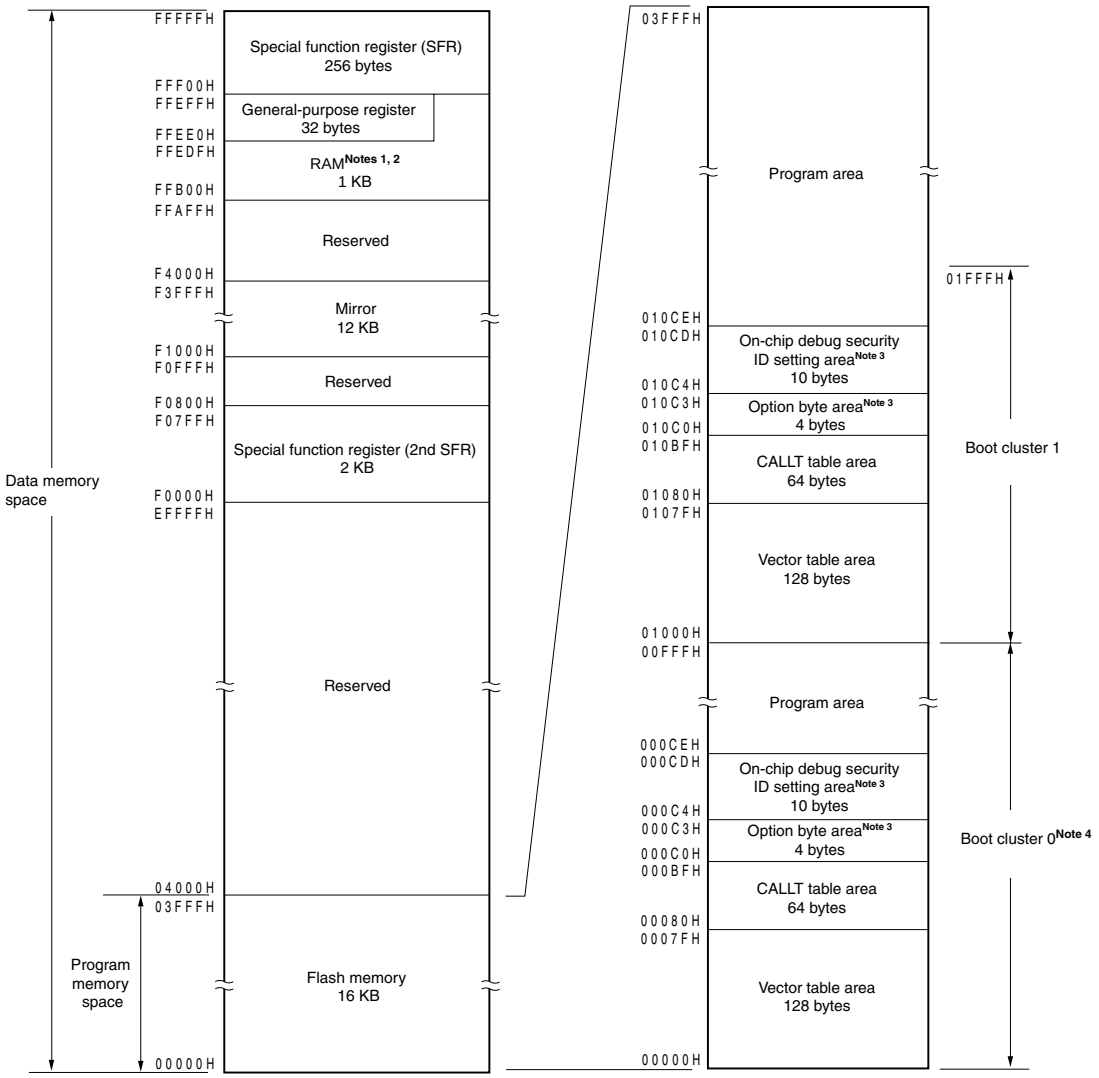

Notes 1. Use of the area FFE20H to FFEDFH is prohibited when using the self-programming function. Since this area is used for self-programming library.

2. Instructions can be executed from the RAM area excluding the general-purpose register area.

3. When boot swap is not used: Set the option bytes to 000C0H to 000C3H, and the on-chip debug security IDs to 000C4H to 000CDH.

When boot swap is used: Set the option bytes to 000C0H to 000C3H and 010C0H to 010C3H, and the on-chip debug security IDs to 000C4H to 000CDH and 010C4H to 010CDH.

4. Writing boot cluster 0 can be prohibited depending on the setting of security (see **24.7 Security Setting**).

Figure 3-2. Memory Map (μPD78F1203, 78F1213, 78F1223, 78F1233)

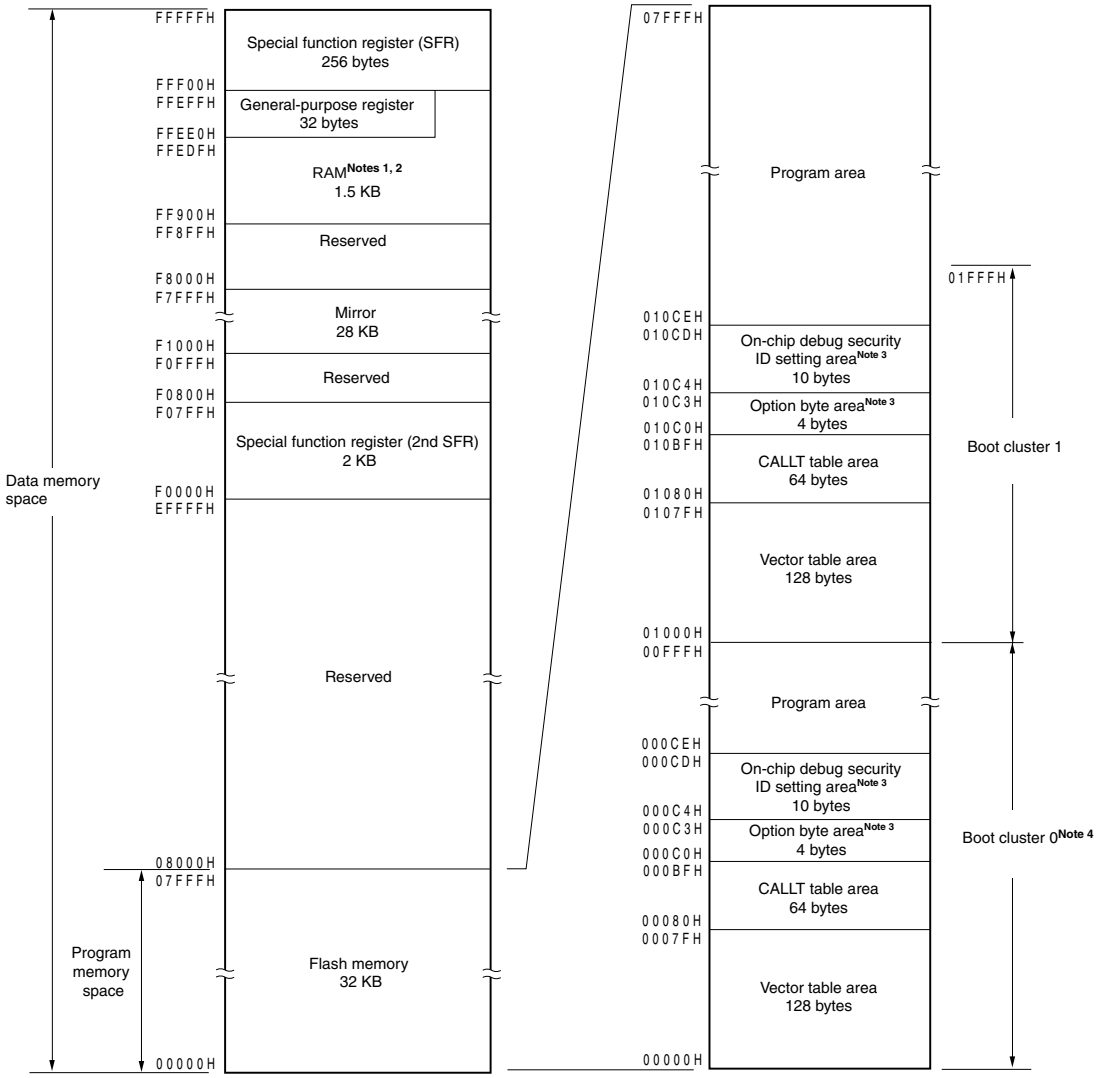

Notes 1. Use of the area FFE20H to FFEDFH is prohibited when using the self-programming function. Since this area is used for self-programming library.

2. Instructions can be executed from the RAM area excluding the general-purpose register area.

3. When boot swap is not used: Set the option bytes to 000C0H to 000C3H, and the on-chip debug security IDs to 000C4H to 000CDH.

When boot swap is used: Set the option bytes to 000C0H to 000C3H and 010C0H to 010C3H, and the on-chip debug security IDs to 000C4H to 000CDH and 010C4H to 010CDH.

4. Writing boot cluster 0 can be prohibited depending on the setting of security (see **24.7 Security Setting**).

Figure 3-3. Memory Map (μPD78F1214, 78F1224, 78F1234)

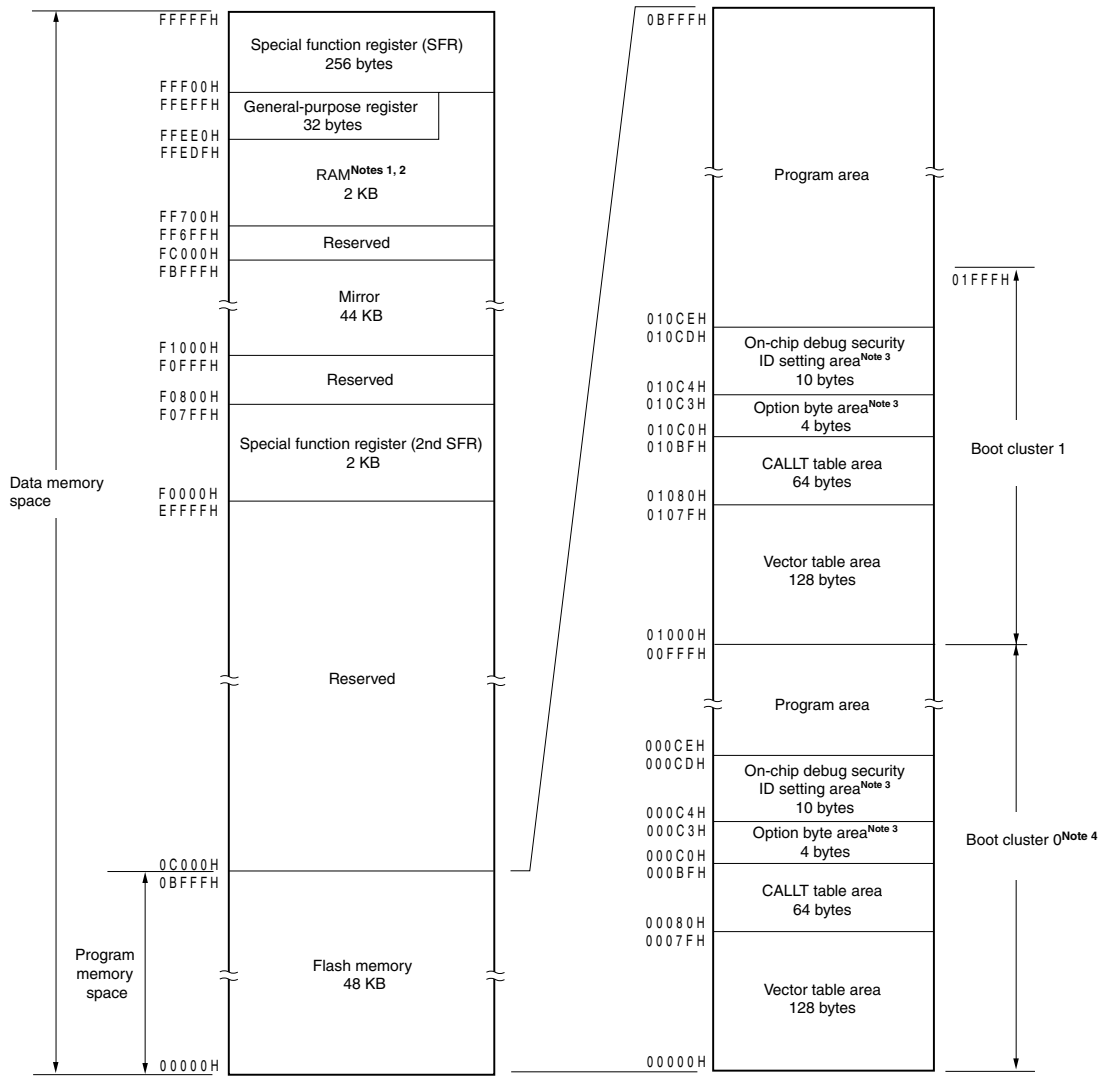

Notes 1. Use of the area FFE20H to FFEDFH is prohibited when using the self-programming function. Since this area is used for self-programming library.

2. Instructions can be executed from the RAM area excluding the general-purpose register area.

3. When boot swap is not used: Set the option bytes to 000C0H to 000C3H, and the on-chip debug security IDs to 000C4H to 000CDH.

When boot swap is used: Set the option bytes to 000C0H to 000C3H and 010C0H to 010C3H, and the on-chip debug security IDs to 000C4H to 000CDH and 010C4H to 010CDH.

4. Writing boot cluster 0 can be prohibited depending on the setting of security (see **24.7 Security Setting**).

Figure 3-4. Memory Map (μPD78F1215, 78F1225, 78F1235)

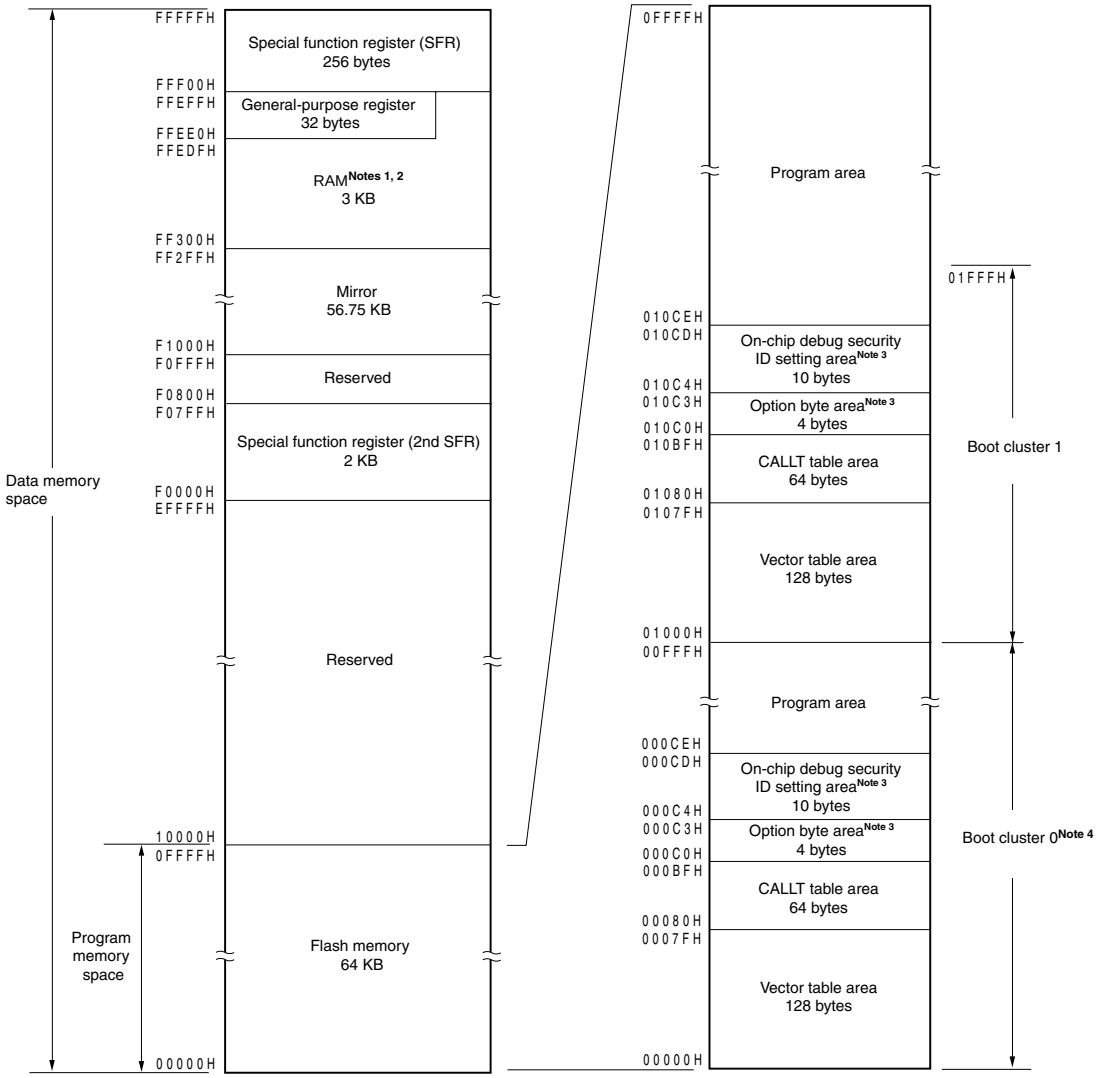

Notes 1. Use of the area FFE20H to FFEDFH and FF300H to FF6FFH are prohibited when using the self-programming function. Since this area is used for self-programming library.

2. Instructions can be executed from the RAM area excluding the general-purpose register area.

3. When boot swap is not used: Set the option bytes to 000C0H to 000C3H, and the on-chip debug security IDs to 000C4H to 000CDH.

When boot swap is used: Set the option bytes to 000C0H to 000C3H and 010C0H to 010C3H, and the on-chip debug security IDs to 000C4H to 000CDH and 010C4H to 010CDH.

4. Writing boot cluster 0 can be prohibited depending on the setting of security (see **24.7 Security Setting**).

Remark The flash memory is divided into blocks (one block = 1 KB). For the address values and block numbers, see **Table 3-1 Correspondence Between Address Values and Block Numbers in Flash Memory**.

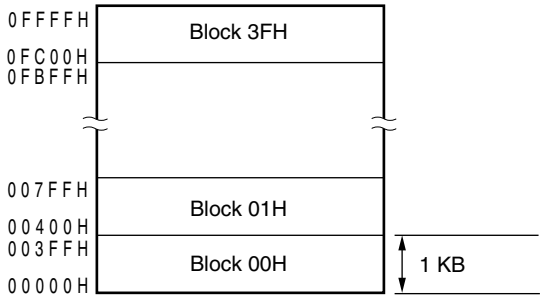

(In case of μPD78F1215, 78F1225, 78F1235)

Correspondence between the address values and block numbers in the flash memory are shown below.

Table 3-1. Correspondence Between Address Values and Block Numbers in Flash Memory

Address Value	Block Number	Address Value	Block Number	Address Value	Block Number	Address Value	Block Number
00000H to 003FFH	00H	04000H to 043FFH	10H	08000H to 083FFH	20H	0C000H to 0C3FFH	30H
00400H to 007FFH	01H	04400H to 047FFH	11H	08400H to 087FFH	21H	0C400H to 0C7FFH	31H
00800H to 00BFFH	02H	04800H to 04BFFH	12H	08800H to 08BFFH	22H	0C800H to 0CBFFH	32H
00C00H to 00FFFH	03H	04C00H to 04FFFH	13H	08C00H to 08FFFH	23H	0CC00H to 0CFFFH	33H
01000H to 013FFH	04H	05000H to 053FFH	14H	09000H to 093FFH	24H	0D000H to 0D3FFH	34H
01400H to 017FFH	05H	05400H to 057FFH	15H	09400H to 097FFH	25H	0D400H to 0D7FFH	35H
01800H to 01BFFH	06H	05800H to 05BFFH	16H	09800H to 09BFFH	26H	0D800H to 0DBFFH	36H
01C00H to 01FFFH	07H	05C00H to 05FFFH	17H	09C00H to 09FFFH	27H	0DC00H to 0DFFFH	37H
02000H to 023FFH	08H	06000H to 063FFH	18H	0A000H to 0A3FFH	28H	0E000H to 0E3FFH	38H
02400H to 027FFH	09H	06400H to 067FFH	19H	0A400H to 0A7FFH	29H	0E400H to 0E7FFH	39H
02800H to 02BFFH	0AH	06800H to 06BFFH	1AH	0A800H to 0ABFFH	2AH	0E800H to 0EBFFH	3AH
02C00H to 02FFFH	0BH	06C00H to 06FFFH	1BH	0AC00H to 0AFFFH	2BH	0EC00H to 0EFFFH	3BH
03000H to 033FFH	0CH	07000H to 073FFH	1CH	0B000H to 0B3FFH	2CH	0F000H to 0F3FFH	3CH
03400H to 037FFH	0DH	07400H to 077FFH	1DH	0B400H to 0B7FFH	2DH	0F400H to 0F7FFH	3DH
03800H to 03BFFH	0EH	07800H to 07BFFH	1EH	0B800H to 0BBFFH	2EH	0F800H to 0FBFFH	3EH
03C00H to 03FFFH	0FH	07C00H to 07FFFH	1FH	0BC00H to 0BFFFH	2FH	0FC00H to 0FFFFH	3FH

Remark μPD78F1201, 78F1211 : Block numbers 00H to 0FH
μPD78F1203, 78F1213, 78F1223, 78F1233 : Block numbers 00H to 1FH
μPD78F1214, 78F1224, 78F1234 : Block numbers 00H to 2FH
μPD78F1215, 78F1225, 78F1235 : Block numbers 00H to 3FH

3.1.1 Internal program memory space

The internal program memory space stores the program and table data.

The 78K0R/Ix3 products incorporate internal ROM (flash memory), as shown below.

Table 3-2. Internal ROM Capacity

Part Number	Internal ROM	
	Structure	Capacity
μPD78F1201, 78F1211	Flash memory	16384 × 8 bits (00000H to 03FFFH)
μPD78F1203, 78F1213, 78F1223, 78F1233		32768 × 8 bits (00000H to 07FFFH)
μPD78F1214, 78F1224, 78F1234		49152 × 8 bits (00000H to 0BFFFH)
μPD78F1215, 78F1225, 78F1235		65536 × 8 bits (00000H to 0FFFFH)

The internal program memory space is divided into the following areas.

(1) Vector table area

The 128-byte area 00000H to 0007FH is reserved as a vector table area. The program start addresses for branch upon reset or generation of each interrupt request are stored in the vector table area. Furthermore, the interrupt jump address is a 64 K address of 00000H to 0FFFFH, because the vector code is assumed to be 2 bytes.

Of the 16-bit address, the lower 8 bits are stored at even addresses and the higher 8 bits are stored at odd addresses.

Table 3-3. Vector Table (1/2)

Vector Table Address	Interrupt Source	IB3	IC3			ID3	IE3
			(38-pin)	(44-pin)	(48-pin)		
00000H	$\overline{\text{RESET}}$ input, POC, LVI, WDT, TRAP	√	√	√	√	√	√
		√	√	√	√	√	√
00004H	INTWDTI	√	√	√	√	√	√
00006H	INTLVI	√	√	√	√	√	√
00008H	INTP0	√	√	√	√	√	√
0000AH	INTP1	√	√	√	√	√	√
0000CH	INTP2	√	√	√	√	√	√
0000EH	INTP3/INTTMOFF0	√	√	√	√	√	√
00010H	INTP4	√	√	√	√	√	√
00012H	INTP5	√	√	√	√	√	√
00014H	INTTMAD	√	√	√	√	√	√
00016H	INTCMP0	√	√	√	√	√	√
00018H	INTCMP1	√	√	√	√	√	√
0001AH	INTDMA0	√	√	√	√	√	√
0001CH	INTDMA1	√	√	√	√	√	√
0001EH	INTST0/INTCSI00	√Note	√Note	√	√	√	√
00020H	INTSR0/INTCSI01	√Note	√Note	√	√	√	√
00022H	INTSRE0	√	√	√	√	√	√
00024H	INTST1/INTCSI10/INTIIC10	√	√	√	√	√	√
00026H	INTSR1	√	√	√	√	√	√
00028H	INTSRE1	√	√	√	√	√	√
0002AH	INTIICA	–	–	–	√	√	√
0002CH	INTTM00	√	√	√	√	√	√
0002EH	INTTM01	√	√	√	√	√	√
00030H	INTTM02	√	√	√	√	√	√
00032H	INTTM03	√	√	√	√	√	√
00034H	INTAD	√	√	√	√	√	√
00036H	INTRTC	–	√	√	√	√	√
00038H	INTRTCI	–	√	√	√	√	√
0003CH	INTTMM0	√	√	√	√	√	√
0003EH	INTTMV0	√	√	√	√	√	√
00040H	INTMD	√	√	√	√	√	√
00042H	INTTM04	√	√	√	√	√	√
00044H	INTTM05	√	√	√	√	√	√
00046H	INTTM06	√	√	√	√	√	√
00048H	INTTM07	√	√	√	√	√	√
0004AH	INTP6	–	√	√	√	√	√
0004CH	INTP7/INTTMOFF1	–	√	√	√	√	√

Note INTST0 and INTSR0 only.

Remark √ : Mounted, –: Not mounted

Table 3-3. Vector Table (1/2)

Vector Table Address	Interrupt Source	IB3	IC3			ID3	IE3
			(38-pin)	(44-pin)	(48-pin)		
0004EH	INTTMM1	√	√	√	√	√	√
00050H	INTTMV1	√	√	√	√	√	√
00052H	INTTM08	√	√	√	√	√	√
00054H	INTTM09	√	√	√	√	√	√
00056H	INTTM10	√	√	√	√	√	√
00058H	INTTM11	√	√	√	√	√	√

Remark √ : Mounted, −: Not mounted

(2) CALLT instruction table area

The 64-byte area 00080H to 000BFH can store the subroutine entry address of a 2-byte call instruction (CALLT). Set the subroutine entry address to a value in a range of 00000H to 0FFFFH (because an address code is of 2 bytes).

To use the boot swap function, set a CALLT instruction table also at 01080H to 010BFH.

(3) Option byte area

A 4-byte area of 000C0H to 000C3H can be used as an option byte area. Set the option byte at 010C0H to 010C3H when the boot swap is used. For details, see **CHAPTER 23 OPTION BYTE**.

(4) On-chip debug security ID setting area

A 10-byte area of 000C4H to 000CDH and 010C4H to 010CDH can be used as an on-chip debug security ID setting area. Set the on-chip debug security ID of 10 bytes at 000C4H to 000CDH when the boot swap is not used and at 000C4H to 000CDH and 010C4H to 010CDH when the boot swap is used. For details, see **CHAPTER 25 ON-CHIP DEBUG FUNCTION**.

3.1.2 Mirror area

The 78K0R/Ix3 mirrors the data flash area of 00000H to 0FFFFH, to F0000H to FFFFFH (set by the processor mode control register (PMC)).

By reading data from F0000H to FFFFFH, an instruction that does not have the ES registers as an operand can be used, and thus the contents of the data flash can be read with the shorter code. However, the data flash area is not mirrored to the SFR, extended SFR, RAM, and use prohibited areas.

See **3.1 Memory Space** for the mirror area of each product.

The mirror area can only be read and no instruction can be fetched from this area.

The following show examples.

Example μPD78F1215, 78F1225, 78F1235 (Flash memory: 64 KB, RAM: 3 KB)

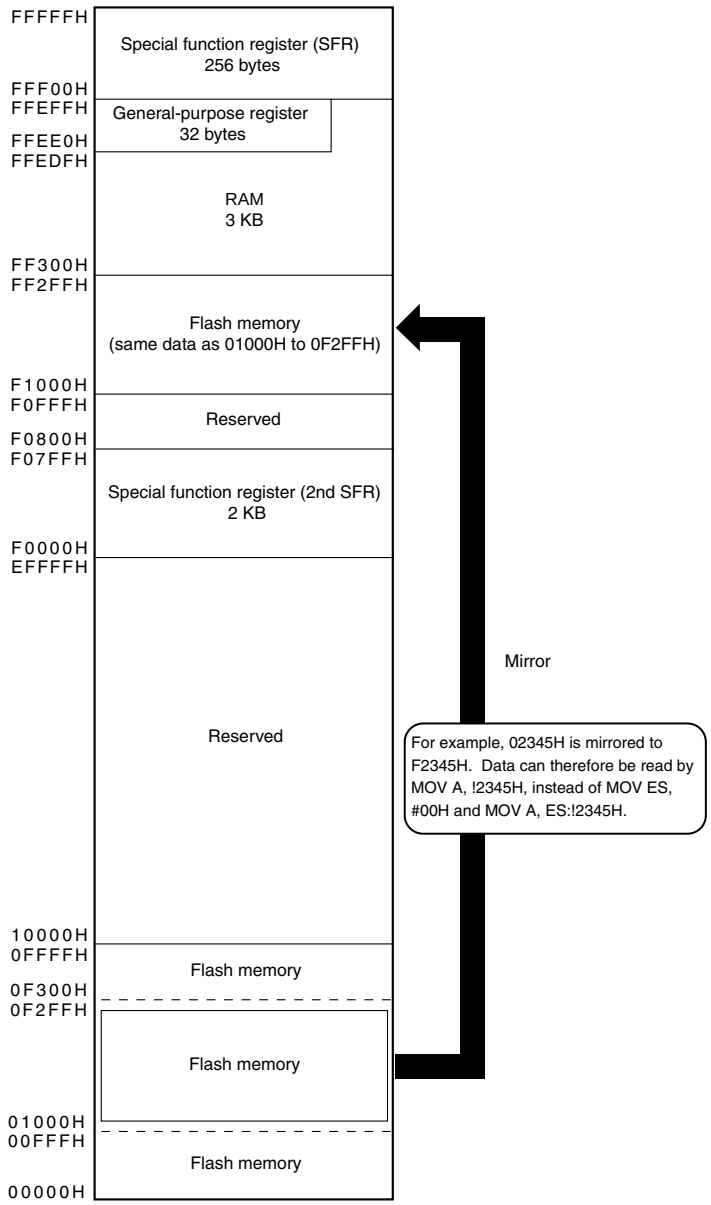

PMC register is described below.

- **Processor mode control register (PMC)**

This register selects the flash memory space for mirroring to area from F0000H to FFFFFH.

PMC can be set by a 1-bit or 8-bit memory manipulation instruction.

Reset signal generation sets this register to 00H.

Figure 3-5. Format of Configuration of Processor Mode Control Register (PMC)

Address: FFFFEH After reset: 00H R/W

Symbol	7	6	5	4	3	2	1	<0>
PMC	0	0	0	0	0	0	0	MAA

MAA	Selection of flash memory space for mirroring to area from F0000H to FFFFFH
0	00000H to 0FFFFH is mirrored to F0000H to FFFFFH
1	Setting prohibited

Cautions 1. Be sure to clear bit 0 (MAA) of this register to 0 (default value).

2. Set PMC register only once during the initial settings prior to operating the DMA controller. Rewriting PMC register other than during the initial settings is prohibited.

3. After setting PMC register, wait for at least one instruction and access the mirror area.

3.1.3 Internal data memory space

The 78K0R/Ix3 products incorporate the following RAMs.

Table 3-4. Internal RAM Capacity

Part Number	Internal RAM
μPD78F1201, 78F1211	1024 × 8 bits (FEB00H to FFEFFH)
μPD78F1203, 78F1213, 78F1223, 78F1233	1536 × 8 bits (FE900H to FFEFFH)
μPD78F1214, 78F1224, 78F1234	2048 × 8 bits (FE700H to FFEFFH)
μPD78F1215, 78F1225, 78F1235	3072 × 8 bits (FE300H to FFEFFH)

The internal RAM can be used as a data area and a program area where instructions are written and executed. Four general-purpose register banks consisting of eight 8-bit registers per bank are assigned to the 32-byte area of FFEE0H to FFEFFH of the internal RAM area. However, instructions cannot be executed by using general-purpose registers.

The internal RAM is used as a stack memory.

Cautions 1. It is prohibited to use the general-purpose register (FFEE0H to FFEFFH) space for fetching instructions or as a stack area.

2. While using the self-programming function, the area of FFE20H to FFEFFH cannot be used as a stack memory. Furthermore, the areas of FF300H to FF6FFH also cannot be used as stack memories with the μPD78F1215, 78F1225, 78F1235, respectively.

3.1.4 Special function register (SFR) area

On-chip peripheral hardware special function registers (SFRs) are allocated in the area FFF00H to FFFFFH (see **Table 3-5** in **3.2.4 Special function registers (SFRs)**).

Caution Do not access addresses to which SFRs are not assigned.

3.1.5 Extended special function register (2nd SFR: 2nd Special Function Register) area

On-chip peripheral hardware special function registers (2nd SFRs) are allocated in the area F0000H to F07FFH (see **Table 3-6** in **3.2.5 Extended Special function registers (2nd SFRs: 2nd Special Function Registers)**).

SFRs other than those in the SFR area (FFF00H to FFFFFH) are allocated to this area. An instruction that accesses the extended SFR area, however, is 1 byte longer than an instruction that accesses the SFR area.

Caution Do not access addresses to which extended SFRs are not assigned.

3.1.6 Data memory addressing

Addressing refers to the method of specifying the address of the instruction to be executed next or the address of the register or memory relevant to the execution of instructions.

Several addressing modes are provided for addressing the memory relevant to the execution of instructions for the 78K0R/Ix3, based on operability and other considerations. For areas containing data memory in particular, special addressing methods designed for the functions of special function registers (SFR) and general-purpose registers are available for use. Figures 3-6 to 3-9 show correspondence between data memory and addressing.

Figure 3-6. Correspondence Between Data Memory and Addressing (μPD78F1201, 78F1211)

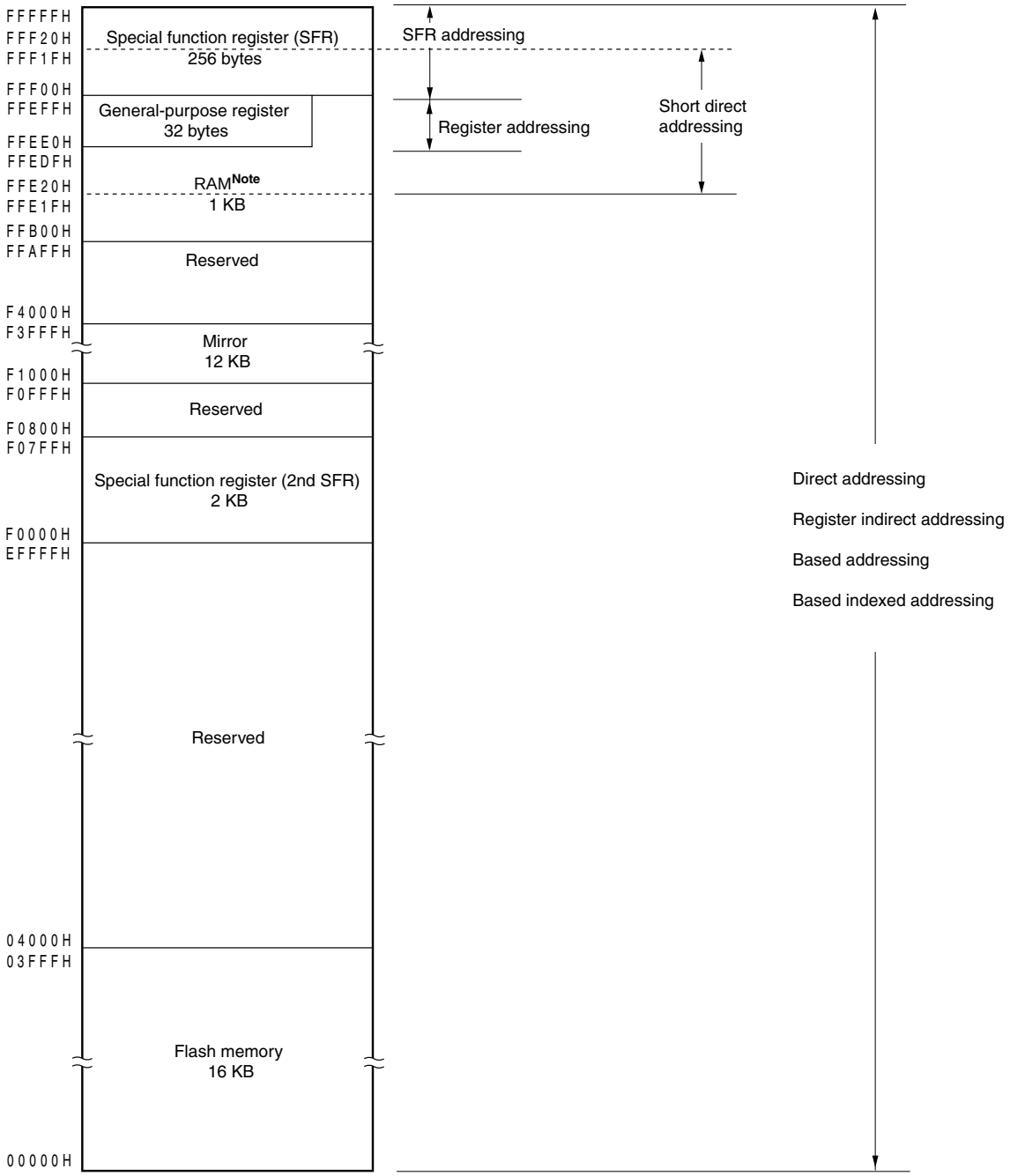

Note Use of the area FFE20H to FFEDFH is prohibited when using the self-programming function. Since this area is used for self-programming library.

Figure 3-7. Correspondence Between Data Memory and Addressing (μPD78F1203, 78F1213, 78F1223, 78F1233)

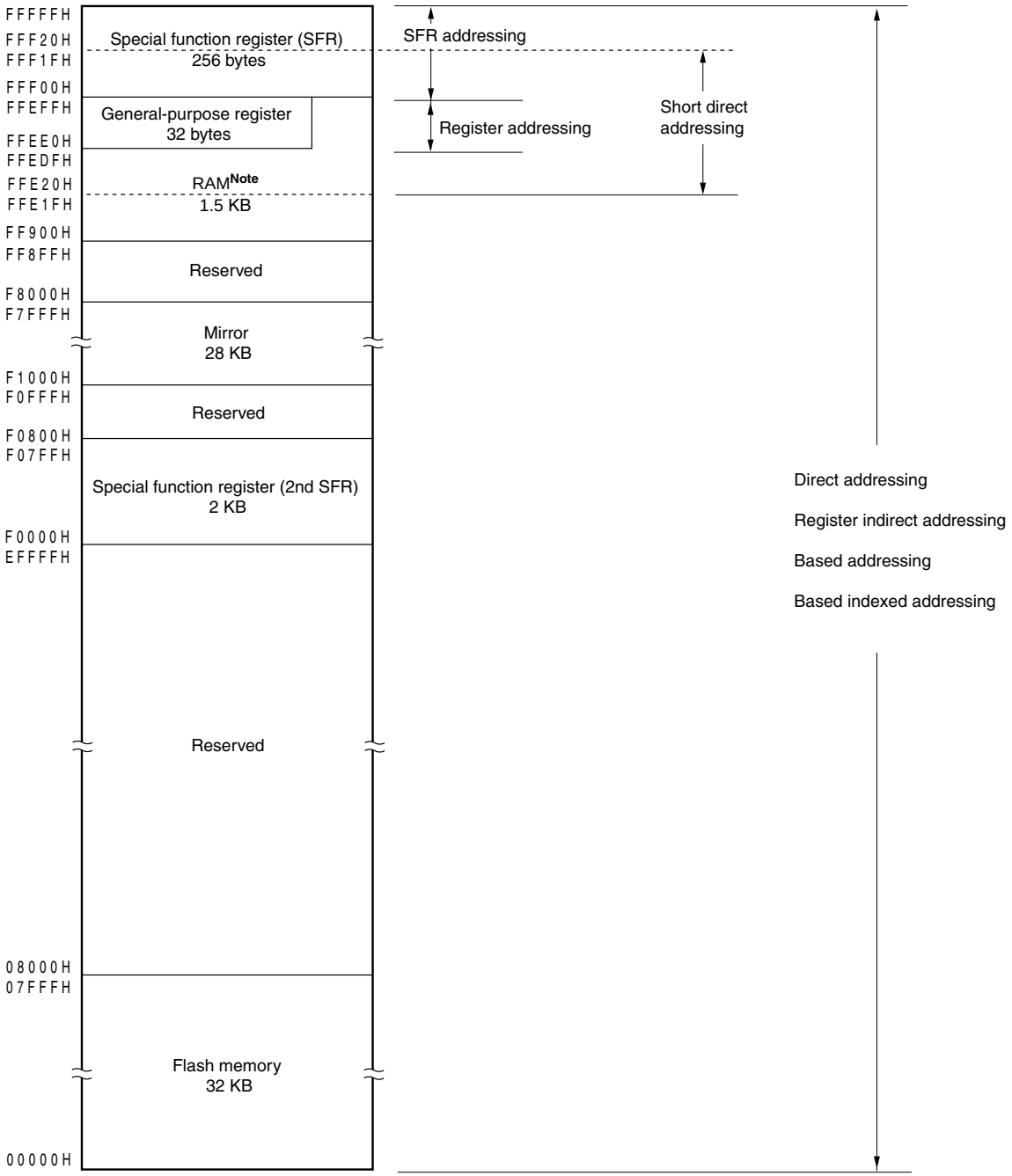

Note Use of the area FFE20H to FFEDFH is prohibited when using the self-programming function. Since this area is used for self-programming library.

Figure 3-8. Correspondence Between Data Memory and Addressing (μPD78F1214, 78F1224, 78F1234)

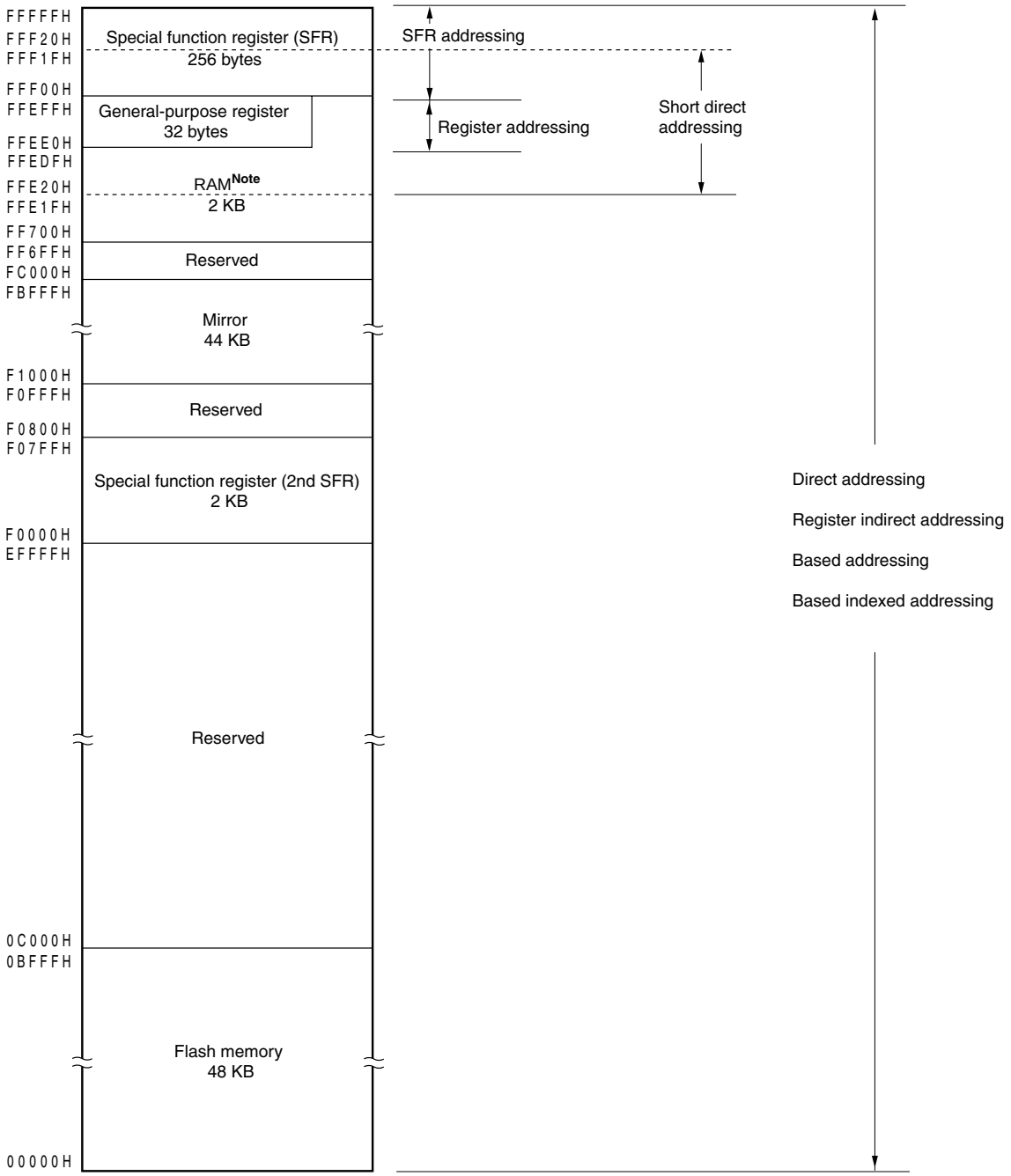

Note Use of the area FFE20H to FFEDFH is prohibited when using the self-programming function. Since this area is used for self-programming library.

Figure 3-9. Correspondence Between Data Memory and Addressing (μPD78F1215, 78F1225, 78F1235)

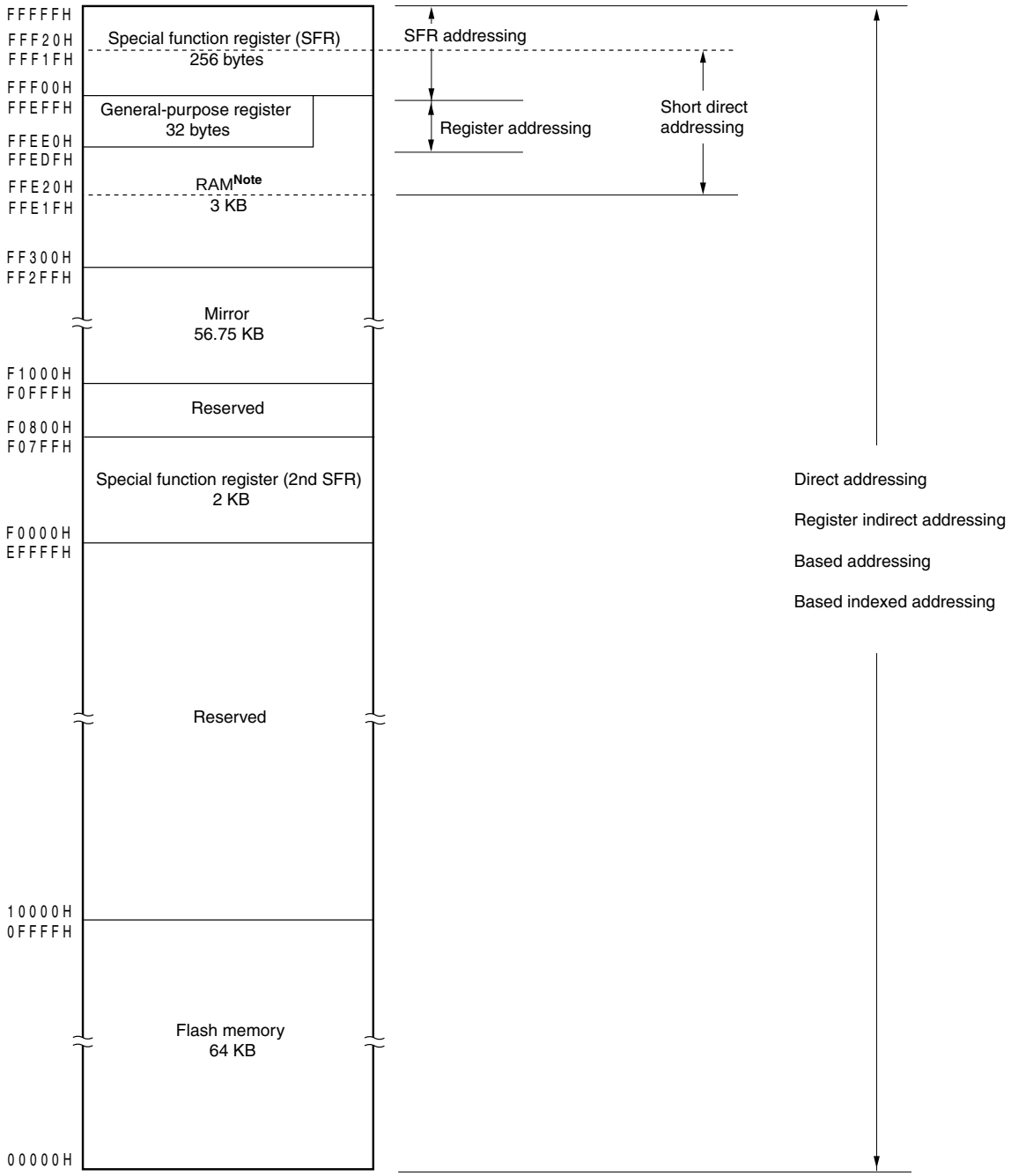

Note Use of the area FFE20H to FFEDFH and FF300H to FF6FFH are prohibited when using the self-programming function. Since this area is used for self-programming library.

3.2 Processor Registers

The 78K0R/Ix3 products incorporate the following processor registers.

3.2.1 Control registers

The control registers control the program sequence, statuses and stack memory. The control registers consist of a program counter (PC), a program status word (PSW) and a stack pointer (SP).

(1) Program counter (PC)

The program counter is a 20-bit register that holds the address information of the next program to be executed.

In normal operation, PC is automatically incremented according to the number of bytes of the instruction to be fetched. When a branch instruction is executed, immediate data and register contents are set.

Reset signal generation sets the reset vector table values at addresses 0000H and 0001H to the program counter.

Figure 3-10. Format of Program Counter

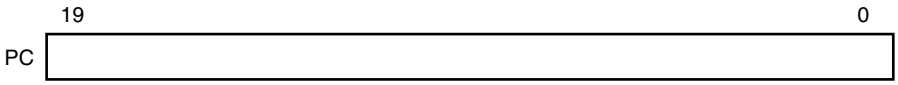

(2) Program status word (PSW)

The program status word is an 8-bit register consisting of various flags set/reset by instruction execution.

Program status word contents are stored in the stack area upon vector interrupt request acknowledgment or PUSH PSW instruction execution and are restored upon execution of the RETB, RETI and POP PSW instructions.

Reset signal generation sets PSW to 06H.

Figure 3-11. Format of Program Status Word

	7							0
PSW	IE	Z	RBS1	AC	RBS0	ISP1	ISP0	CY

(a) Interrupt enable flag (IE)

This flag controls the interrupt request acknowledge operations of the CPU.

When 0, the IE flag is set to the interrupt disabled (DI) state, and all maskable interrupt requests are disabled.

When 1, the IE flag is set to the interrupt enabled (EI) state and interrupt request acknowledgment is controlled with an in-service priority flag (ISP1, ISP0), an interrupt mask flag for various interrupt sources, and a priority specification flag.

The IE flag is reset (0) upon DI instruction execution or interrupt acknowledgment and is set (1) upon EI instruction execution.

(b) Zero flag (Z)

When the operation result is zero, this flag is set (1). It is reset (0) in all other cases.

(c) Register bank select flags (RBS0, RBS1)

These are 2-bit flags to select one of the four register banks.

In these flags, the 2-bit information that indicates the register bank selected by SEL RBn instruction execution is stored.

(d) Auxiliary carry flag (AC)

If the operation result has a carry from bit 3 or a borrow at bit 3, this flag is set (1). It is reset (0) in all other cases.

(e) In-service priority flags (ISP1, ISP0)

This flag manages the priority of acknowledgeable maskable vectored interrupts. Vectored interrupt requests specified lower than the value of ISP0 and ISP1 by a priority specification flag register (PRn0L, PRn0H, PRn1L, PRn1H, PRn2L, PRn2H) (see **17.3 (3)**) can not be acknowledged. Actual request acknowledgment is controlled by the interrupt enable flag (IE).

Remark n = 0, 1

(f) Carry flag (CY)

This flag stores overflow and underflow upon add/subtract instruction execution. It stores the shift-out value upon rotate instruction execution and functions as a bit accumulator during bit operation instruction execution.

(3) Stack pointer (SP)

This is a 16-bit register to hold the start address of the memory stack area. Only the internal RAM area can be set as the stack area.

Figure 3-12. Format of Stack Pointer

	15															0
SP	SP15	SP14	SP13	SP12	SP11	SP10	SP9	SP8	SP7	SP6	SP5	SP4	SP3	SP2	SP1	SP0

The SP is decremented ahead of write (save) to the stack memory and is incremented after read (restored) from the stack memory.

Each stack operation saves data as shown in Figure 3-13.

Cautions 1. Since reset signal generation makes the SP contents undefined, be sure to initialize the SP before using the stack.

2. It is prohibited to use the general-purpose register (FFEE0H to FFEFFH) space as a stack area.

3. While using the self-programming function, the area of FFE20H to FFEFFH cannot be used as a stack memory. Furthermore, the areas of FF300H to FF6FFH also cannot be used as stack memories with the μPD78F1215, 78F1225, 78F1235, respectively.

Figure 3-13. Data to Be Saved to Stack Memory

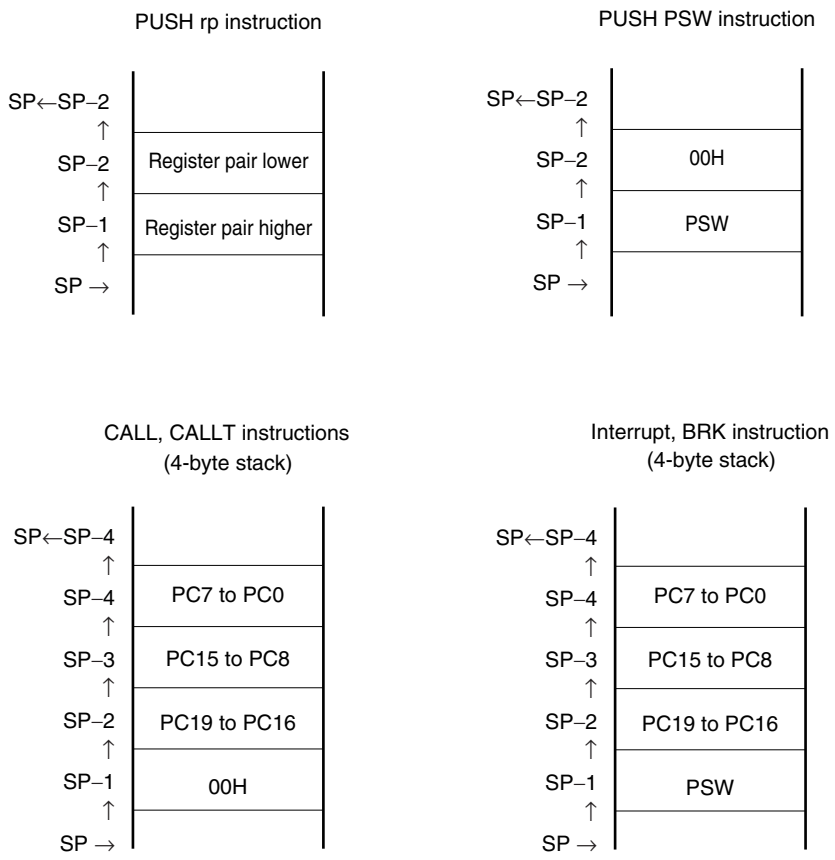

3.2.2 General-purpose registers

General-purpose registers are mapped at particular addresses (FFEE0H to FFEFFH) of the data memory. The general-purpose registers consists of 4 banks, each bank consisting of eight 8-bit registers (X, A, C, B, E, D, L, and H).

Each register can be used as an 8-bit register, and two 8-bit registers can also be used in a pair as a 16-bit register (AX, BC, DE, and HL).

These registers can be described in terms of function names (X, A, C, B, E, D, L, H, AX, BC, DE, and HL) and absolute names (R0 to R7 and RP0 to RP3).

Register banks to be used for instruction execution are set by the CPU control instruction (SEL RBn). Because of the 4-register bank configuration, an efficient program can be created by switching between a register for normal processing and a register for interrupts for each bank.

Caution It is prohibited to use the general-purpose register (FFEE0H to FFEFFH) space for fetching instructions or as a stack area.

Figure 3-14. Configuration of General-Purpose Registers

(a) Function name

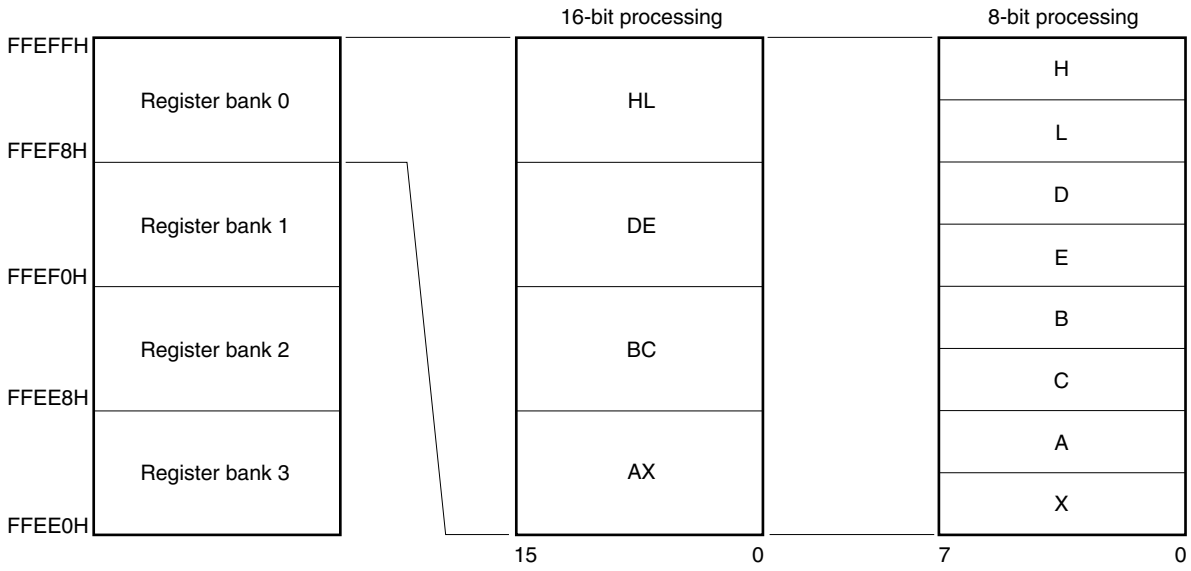

(b) Absolute name

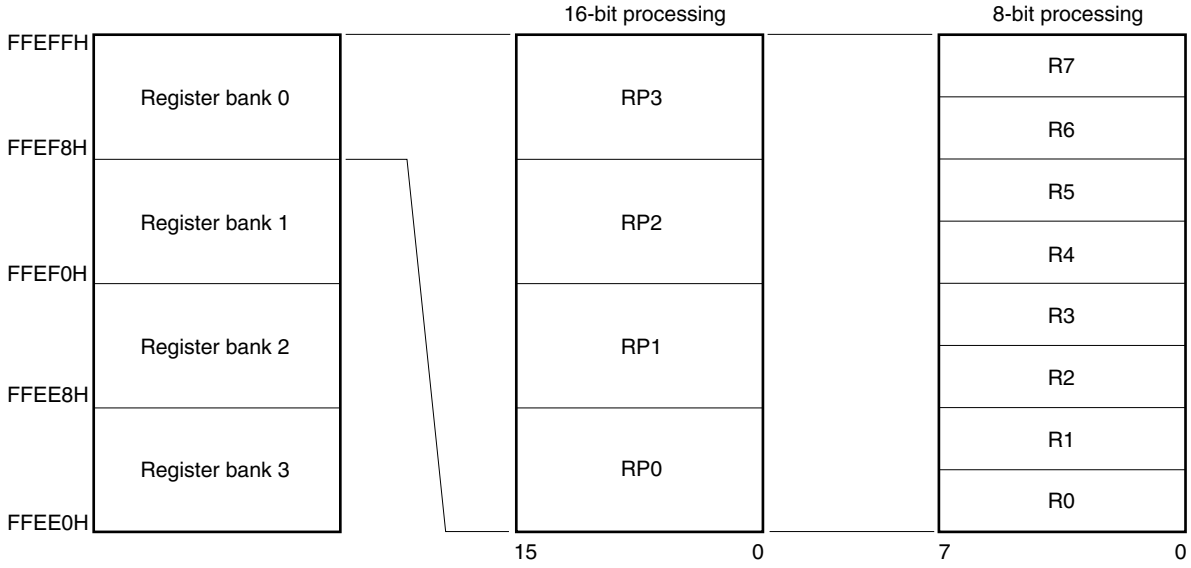

3.2.3 ES and CS registers

The ES register is used for data access and the CS register is used to specify the higher address when a branch instruction is executed.

The default value of the ES register after reset is 0FH, and that of the CS register is 00H.

Figure 3-15. Configuration of ES and CS Registers

	7	6	5	4	3	2	1	0
ES	0	0	0	0	ES3	ES2	ES1	ES0

	7	6	5	4	3	2	1	0
CS	0	0	0	0	CS3	CP2	CP1	CP0

3.2.4 Special function registers (SFRs)

Unlike a general-purpose register, each SFR has a special function.

SFRs are allocated to the FFF00H to FFFFFH area.

SFRs can be manipulated like general-purpose registers, using operation, transfer, and bit manipulation instructions. The manipulable bit units, 1, 8, and 16, depend on the SFR type.

Each manipulation bit unit can be specified as follows.

- 1-bit manipulation
  Describe the symbol reserved by the assembler for the 1-bit manipulation instruction operand (sfr.bit). This manipulation can also be specified with an address.
- 8-bit manipulation
  Describe the symbol reserved by the assembler for the 8-bit manipulation instruction operand (sfr). This manipulation can also be specified with an address.
- 16-bit manipulation
  Describe the symbol reserved by the assembler for the 16-bit manipulation instruction operand (sfrp). When specifying an address, describe an even address.

Table 3-5 gives a list of the SFRs. The meanings of items in the table are as follows.

- Symbol
  Symbol indicating the address of a special function register. It is a reserved word in the RA78K0R, and is defined as an sfr variable using the #pragma sfr directive in the CC78K0R. When using the RA78K0R, ID78K0R-QB, and SM+ for 78K0R, symbols can be written as an instruction operand.
- R/W
  Indicates whether the corresponding SFR can be read or written.
  R/W: Read/write enable
  R: Read only
  W: Write only
- Manipulable bit units
  "√" indicates the manipulable bit unit (1, 8, or 16). "–" indicates a bit unit for which manipulation is not possible.
- After reset
  Indicates each register status upon reset signal generation.

Caution Do not access addresses to which extended SFRs are not assigned.

Remark For extended SFRs (2nd SFRs), see **3.2.5 Extended special function registers (2nd SFRs: 2nd Special Function Registers)**.

Table 3-5. SFR List (1/5)

Address	Special Function Register (SFR) Name	Symbol		R/W	Manipulable Bit Range			After Reset	78K0R/IB3	78K0R/IC3 (38-pin)	78K0R/IC3 (44-pin)	78K0R/IC3 (48-pin)	78K0R/ID3	78K0R/IE3
					1-bit	8-bit	16-bit							
FFF00H	Port register 0	P0		R/W	√	√	–	00H	–	–	–	–	√	√
FFF01H	Port register 1	P1		R/W	√	√	–	00H	√	√	√	√	√	√
FFF02H	Port register 2	P2		R/W	√	√	–	00H	√	√	√	√	√	√
FFF03H	Port register 3	P3		R/W	√	√	–	00H	√	√	√	√	√	√
FFF04H	Port register 4	P4		R/W	√	√	–	00H	√	√	√	√	√	√
FFF05H	Port register 5	P5		R/W	√	√	–	00H	√	√	√	√	√	√
FFF06H	Port register 6	P6		R/W	√	√	–	00H	–	–	–	√	√	√
FFF07H	Port register 7	P7		R/W	√	√	–	00H	–	√	√	√	√	√
FFF08H	Port register 8	P8		R/W	√	√	–	00H	√	√	√	√	√	√
FFF0CH	Port register 12	P12		R/W	√	√	–	Undefined	√	√	√	√	√	√
FFF0EH	Port register 14	P14		R/W	√	√	–	00H	–	–	–	√	√	√
FFF0FH	Port register 15	P15		R/W	√	√	–	00H	–	–	√	√	√	√
FFF10H	Serial data register 00	TXD0/ SIO00	SDR00	R/W	–	√	√	0000H	√ Note	√ Note	√	√	√	√
FFF11H		–			–	–								
FFF12H	Serial data register 01	RXD0/ SIO01	SDR01	R/W	–	√	√	0000H	√ Note	√ Note	√	√	√	√
FFF13H		–			–	–								
FFF18H	Timer data register 00	TDR00		R/W	–	–	√	0000H	√	√	√	√	√	√
FFF19H														
FFF1AH	Timer data register 01	TDR01		R/W	–	–	√	0000H	√	√	√	√	√	√
FFF1BH														
FFF1EH	10-bit A/D conversion result register	ADCR		R	–	–	√	0000H	√	√	√	√	√	√
FFF1FH	8-bit A/D conversion result register	ADCRH		R	–	√	–	00H	√	√	√	√	√	√
FFF20H	Port mode register 1	PM0		R/W	√	√	–	FFH	–	–	–	–	√	√
FFF21H	Port mode register 2	PM1		R/W	√	√	–	FFH	√	√	√	√	√	√
FFF22H	Port mode register 3	PM2		R/W	√	√	–	FFH	√	√	√	√	√	√
FFF23H	Port mode register 4	PM3		R/W	√	√	–	FFH	√	√	√	√	√	√
FFF24H	Port mode register 5	PM4		R/W	√	√	–	FFH	√	√	√	√	√	√
FFF25H	Port mode register 6	PM5		R/W	√	√	–	FFH	√	√	√	√	√	√
FFF26H	Port mode register 7	PM6		R/W	√	√	–	FFH	–	–	–	√	√	√
FFF27H	Port mode register 8	PM7		R/W	√	√	–	FFH	–	√	√	√	√	√
FFF28H	Port mode register 12	PM8		R/W	√	√	–	FFH	√	√	√	√	√	√
FFF2CH	Port mode register 12	PM12		R/W	√	√	–	FFH	√	√	√	√	√	√
FFF2EH	Port mode register 14	PM14		R/W	√	√	–	FEH	–	–	–	–	–	√
FFF2FH	Port mode register 15	PM15		R/W	√	√	–	FFH	–	–	√	√	√	√
FFF30H	A/D converter mode register	ADM		R/W	√	√	–	00H	√	√	√	√	√	√

Note TXD0, RXD0 only.

Table 3-5. SFR List (2/5)

Address	Special Function Register (SFR) Name	Symbol		R/W	Manipulable Bit Range			After Reset	78K0R/IB3	78K0R/IC3 (38-pin)	78K0R/IC3 (44-pin)	78K0R/IC3 (48-pin)	78K0R/ID3	78K0R/IE3
					1-bit	8-bit	16-bit							
FFF31H	Analog input channel specification register	ADS		R/W	√	√	–	00H	√	√	√	√	√	√
FFF38H	External interrupt rising edge enable register 0	EGP0		R/W	√	√	–	00H	√	√	√	√	√	√
FFF39H	External interrupt falling edge enable register 0	EGN0		R/W	√	√	–	00H	√	√	√	√	√	√
FFF3CH	Input switch control register	ISC		R/W	√	√	–	00H	√	√	√	√	√	√
FFF3EH	Timer input select register 0	TIS0		R/W	√	√	–	00H	–	√	√	√	√	√
FFF42H	A/D converter mode register 1	ADM1		R/W	√	√	–	00H	√	√	√	√	√	√
FFF44H	Serial data register 02	TXD1/ SIO10	SDR02	R/W	–	√	√	0000H	√	√	√	√	√	√
FFF45H		–			–	–								
FFF46H	Serial data register 03	RXD1	SDR03	R/W	–	√	√	0000H	√	√	√	√	√	√
FFF47H		–			–	–								
FFF50H	IICA shift register	IICA		R/W	–	√	–	00H	–	–	–	√	√	√
FFF51H	IICA status register	IICS		R	√	√	–	00H	–	–	–	√	√	√
FFF52H	IICA flag register	IICF		R/W	√	√	–	00H	–	–	–	√	√	√
FFF64H	Timer data register 02	TDR02		R/W	–	–	√	0000H	√	√	√	√	√	√
FFF65H														
FFF66H	Timer data register 03	TDR03		R/W	–	–	√	0000H	√	√	√	√	√	√
FFF67H														
FFF68H	Timer data register 04	TDR04		R/W	–	–	√	0000H	√	√	√	√	√	√
FFF69H														
FFF6AH	Timer data register 05	TDR05		R/W	–	–	√	0000H	√	√	√	√	√	√
FFF6BH														
FFF6CH	Timer data register 06	TDR06		R/W	–	–	√	0000H	√	√	√	√	√	√
FFF6DH														
FFF6EH	Timer data register 07	TDR07		R/W	–	–	√	0000H	√	√	√	√	√	√
FFF6FH														
FFF70H	Timer data register 08	TDR08		R/W	–	–	√	0000H	√	√	√	√	√	√
FFF71H														
FFF72H	Timer data register 09	TDR09		R/W	–	–	√	0000H	√	√	√	√	√	√
FFF73H														
FFF74H	Timer data register 10	TDR10		R/W	–	–	√	0000H	√	√	√	√	√	√
FFF75H														
FFF76H	Timer data register 11	TDR11		R/W	–	–	√	0000H	√	√	√	√	√	√
FFF77H														

Table 3-5. SFR List (3/5)

Address	Special Function Register (SFR) Name	Symbol	R/W	Manipulable Bit Range			After Reset	78K0R/IB3	78K0R/IC3 (38-pin)	78K0R/IC3 (44-pin)	78K0R/IC3 (48-pin)	78K0R/ID3	78K0R/IE3
				1-bit	8-bit	16-bit							
FFF90H FFF91H	Sub-count register	RSUBC	R	–	–	√	0000H	–	√	√	√	√	√
FFF92H	Second count register	SEC	R/W	–	√	–	00H	–	√	√	√	√	√
FFF93H	Minute count register	MIN	R/W	–	√	–	00H	–	√	√	√	√	√
FFF94H	Hour count register	HOUR	R/W	–	√	–	12H Note 1	–	√	√	√	√	√
FFF95H	Week count register	WEEK	R/W	–	√	–	00H	–	√	√	√	√	√
FFF96H	Day count register	DAY	R/W	–	√	–	01H	–	√	√	√	√	√
FFF97H	Month count register	MONTH	R/W	–	√	–	01H	–	√	√	√	√	√
FFF98H	Year count register	YEAR	R/W	–	√	–	00H	–	√	√	√	√	√
FFF99H	Watch error correction register	SUBCUD	R/W	–	√	–	00H	–	√	√	√	√	√
FFF9AH	Alarm minute register	ALARMWM	R/W	–	√	–	00H	–	√	√	√	√	√
FFF9BH	Alarm hour register	ALARMWH	R/W	–	√	–	12H	–	√	√	√	√	√
FFF9CH	Alarm week register	ALARMWW	R/W	–	√	–	00H	–	√	√	√	√	√
FFF9DH	Real-time counter control register 0	RTCC0	R/W	√	√	–	00H	–	√	√	√	√	√
FFF9EH	Real-time counter control register 1	RTCC1	R/W	√	√	–	00H	–	√	√	√	√	√
FFF9FH	Real-time counter control register 2	RTCC2	R/W	√	√	–	00H	–	√	√	√	√	√
FFFA0H	Real-time counter control register 0	CMC	R/W	–	√	–	00H	√	√	√	√	√	√
FFFA1H	Real-time counter control register 1	CSC	R/W	√	√	–	C0H	√	√	√	√	√	√
FFFA2H	Real-time counter control register 2	OSTC	R	√	√	–	00H	√	√	√	√	√	√
FFFA3H	Clock operation mode control register	OSTS	R/W	–	√	–	07H	√	√	√	√	√	√
FFFA4H	Clock operation status control register	CKC	R/W	√	√	–	09H	√	√	√	√	√	√
FFFA5H	Oscillation stabilization time counter status register 0	CKS0	R/W	√	√	–	00H	–	–	–	√	√	√
FFFA6H	Oscillation stabilization time counter status register 1	CKS1	R/W	√	√	–	00H	–	–	–	–	–	√
FFFA8H	Reset control flag register	RESF	R	–	√	–	00H Note 2	√	√	√	√	√	√
FFFA9H	Low-voltage detection register	LVIM	R/W	√	√	–	00H Note 3	√	√	√	√	√	√
FFFAAH	Low-voltage detection level select register	LVIS	R/W	√	√	–	0EH Note 4	√	√	√	√	√	√
FFFABH	Watchdog timer enable register	WDTE	R/W	–	√	–	1A/9A Note 5	√	√	√	√	√	√
FFFB0H	DMA SFR address register 0	DSA0	R/W	–	√	–	00H	√	√	√	√	√	√
FFFB1H	DMA SFR address register 1	DSA1	R/W	–	√	–	00H	√	√	√	√	√	√

Notes
1. The value of this register is 00H if the AMPM bit (bit 3 of the RTCC0 register) is set to 1 after reset.
2. The reset value of RESF varies depending on the reset source.
3. The reset value of LVIM varies depending on the reset source and the setting of the option byte.
4. The reset value of LVIS varies depending on the reset source.
5. The reset value of WDTE is determined by the setting of the option byte.

Table 3-5. SFR List (4/5)

Address	Special Function Register (SFR) Name	Symbol		R/W	Manipulable Bit Range			After Reset	78K0R/IB3	78K0R/IC3 (38-pin)	78K0R/IC3 (44-pin)	78K0R/IC3 (48-pin)	78K0R/ID3	78K0R/IE3
					1-bit	8-bit	16-bit							
FFFB2H	DMA RAM address register 0L	DRA0L	DRA0	R/W	–	√	√	00H	√	√	√	√	√	√
FFFB3H	DMA RAM address register 0H	DRA0H		R/W	–	√		00H	√	√	√	√	√	√
FFFB4H	DMA RAM address register 1L	DRA1L	DRA1	R/W	–	√	√	00H	√	√	√	√	√	√
FFFB5H	DMA RAM address register 1H	DRA1H		R/W	–	√		00H	√	√	√	√	√	√
FFFB6H	DMA byte count register 0L	DBC0L	DBC0	R/W	–	√	√	00H	√	√	√	√	√	√
FFFB7H	DMA byte count register 0H	DBC0H		R/W	–	√		00H	√	√	√	√	√	√
FFFB8H	DMA byte count register 1L	DBC1L	DBC1	R/W	–	√	√	00H	√	√	√	√	√	√
FFFB9H	DMA byte count register 1H	DBC1H		R/W	–	√		00H	√	√	√	√	√	√
FFFBAH	DMA mode control register 0	DMC0		R/W	√	√	–	00H	√	√	√	√	√	√
FFFBBH	DMA mode control register 1	DMC1		R/W	√	√	–	00H	√	√	√	√	√	√
FFFBCH	DMA operation control register 0	DRC0		R/W	√	√	–	00H	√	√	√	√	√	√
FFFBDH	DMA operation control register 1	DRC1		R/W	√	√	–	00H	√	√	√	√	√	√
FFFBEH	Back ground event control register	BECTL		R/W	√	√	–	00H	√	√	√	√	√	√
FFFC0H	–	PFCMD Note		–	–	–	–	Undefined	√	√	√	√	√	√
FFFC2H	–	PFS Note		–	–	–	–	Undefined	√	√	√	√	√	√
FFFC4H	–	FLPMC Note		–	–	–	–	Undefined	√	√	√	√	√	√
FFFD0H	Interrupt request flag register 2L	IF2L	IF2	R/W	√	√	√	00H	√	√	√	√	√	√
FFFD1H	Interrupt request flag register 2H	IF2H		R/W	√	√		00H	√	√	√	√	√	√
FFFD4H	Interrupt mask flag register 2L	MK2L	MK2	R/W	√	√	√	FFH	√	√	√	√	√	√
FFFD5H	Interrupt mask flag register 2H	MK2H		R/W	√	√		FFH	√	√	√	√	√	√
FFFD8H	Priority specification flag register 02L	PR02L	PR02	R/W	√	√	√	FFH	√	√	√	√	√	√
FFFD9H	Priority specification flag register 02H	PR02H		R/W	√	√		FFH	√	√	√	√	√	√
FFFDCH	Priority specification flag register 12L	PR12L	PR12	R/W	√	√	√	FFH	√	√	√	√	√	√
FFFDDH	Priority specification flag register 12H	PR12H		R/W	√	√		FFH	√	√	√	√	√	√
FFFE0H	Interrupt request flag register 0L	IF0L	IF0	R/W	√	√	√	00H	√	√	√	√	√	√
FFFE1H	Interrupt request flag register 0H	IF0H		R/W	√	√		00H	√	√	√	√	√	√
FFFE2H	Interrupt request flag register 1L	IF1L	IF1	R/W	√	√	√	00H	√	√	√	√	√	√
FFFE3H	Interrupt request flag register 1H	IF1H		R/W	√	√		00H	√	√	√	√	√	√

Note Do not directly operate this SFR, because it is to be used in the self programming library.

Table 3-5. SFR List (5/5)

Address	Special Function Register (SFR) Name	Symbol		R/W	Manipulable Bit Range			After Reset	78K0R/IB3	78K0R/IC3 (38-pin)	78K0R/IC3 (44-pin)	78K0R/IC3 (48-pin)	78K0R/ID3	78K0R/IE3
					1-bit	8-bit	16-bit							
FFFE4H	Interrupt mask flag register 0L	MK0L	MK0	R/W	√	√	√	FFH	√	√	√	√	√	√
FFFE5H	Interrupt mask flag register 0H	MK0H		R/W	√	√		FFH	√	√	√	√	√	√
FFFE6H	Interrupt mask flag register 1L	MK1L	MK1	R/W	√	√	√	FFH	√	√	√	√	√	√
FFFE7H	Interrupt mask flag register 1H	MK1H		R/W	√	√		FFH	√	√	√	√	√	√
FFFE8H	Priority specification flag register 00L	PR00L	PR00	R/W	√	√	√	FFH	√	√	√	√	√	√
FFFE9H	Priority specification flag register 00H	PR00H		R/W	√	√		FFH	√	√	√	√	√	√
FFFEAH	Priority specification flag register 01L	PR01L	PR01	R/W	√	√	√	FFH	√	√	√	√	√	√
FFFEBH	Priority specification flag register 01H	PR01H		R/W	√	√		FFH	√	√	√	√	√	√
FFFECH	Priority specification flag register 10L	PR10L	PR10	R/W	√	√	√	FFH	√	√	√	√	√	√
FFFEDH	Priority specification flag register 10H	PR10H		R/W	√	√		FFH	√	√	√	√	√	√
FFFEEH	Priority specification flag register 11L	PR11L	PR11	R/W	√	√	√	FFH	√	√	√	√	√	√
FFFEFH	Priority specification flag register 11H	PR11H		R/W	√	√		FFH	√	√	√	√	√	√
FFFF0H FFFF1H	Multiplication/division data register A (L)	MDAL/MULA		R/W	–	–	√	0000H	√	√	√	√	√	√
FFFF2H FFFF3H	Multiplication/division data register A (H)	MDAH/MULB		R/W	–	–	√	0000H	√	√	√	√	√	√
FFFF4H FFFF5H	Multiplication/division data register B (H)	MDBH/MULOH		R/W	–	–	√	0000H	√	√	√	√	√	√
FFFF6H FFFF7H	Multiplication/division data register B (L)	MDBL/MULOL		R/W	–	–	√	0000H	√	√	√	√	√	√
FFFFEH	Processor mode control register	PMC		R/W	√	√	–	00H	√	√	√	√	√	√

Remark For extended SFRs (2nd SFRs), see **Table 3-6 Extended SFR (2nd SFR) List**.

3.2.5 Extended special function registers (2nd SFRs: 2nd Special Function Registers)

Unlike a general-purpose register, each extended SFR (2nd SFR) has a special function.

Extended SFRs are allocated to the F0000H to F07FFH area. SFRs other than those in the SFR area (FFF00H to FFFFFH) are allocated to this area. An instruction that accesses the extended SFR area, however, is 1 byte longer than an instruction that accesses the SFR area.

Extended SFRs can be manipulated like general-purpose registers, using operation, transfer, and bit manipulation instructions. The manipulable bit units, 1, 8, and 16, depend on the SFR type.

Each manipulation bit unit can be specified as follows.

- 1-bit manipulation
  Describe the symbol reserved by the assembler for the 1-bit manipulation instruction operand (!addr16.bit). This manipulation can also be specified with an address.
- 8-bit manipulation
  Describe the symbol reserved by the assembler for the 8-bit manipulation instruction operand (!addr16). This manipulation can also be specified with an address.
- 16-bit manipulation
  Describe the symbol reserved by the assembler for the 16-bit manipulation instruction operand (!addr16). When specifying an address, describe an even address.

Table 3-6 gives a list of the extended SFRs. The meanings of items in the table are as follows.

- Symbol
  Symbol indicating the address of an extended SFR. It is a reserved word in the RA78K0R, and is defined as an sfr variable using the #pragma sfr directive in the CC78K0R. When using the RA78K0R, ID78K0R-QB, and SM+ for 78K0R, symbols can be written as an instruction operand.
- R/W
  Indicates whether the corresponding extended SFR can be read or written.
  R/W: Read/write enable
  R: Read only
  W: Write only
- Manipulable bit units
  "√" indicates the manipulable bit unit (1, 8, or 16). "–" indicates a bit unit for which manipulation is not possible.
- After reset
  Indicates each register status upon reset signal generation.

Caution Do not access addresses to which extended SFRs are not assigned.

Remark For SFRs in the SFR area, see **3.2.4 Special function registers (SFRs)**.

Table 3-6. Extended SFR (2nd SFR) List (1/6)

Address	Special Function Register (SFR) Name	Symbol		R/W	Manipulable Bit Range			After Reset	78K0R/IB3	78K0R/IC3 (38-pin)	78K0R/IC3 (44-pin)	78K0R/IC3 (48-pin)	78K0R/ID3	78K0R/IE3
					1-bit	8-bit	16-bit							
F0017H	A/D port configuration register	ADPC		R/W	–	√	–	10H	√	√	√	√	√	√
F0030H	Pull-up resistor option register 0	PU0		R/W	√	√	–	00H	–	–	–	–	√	√
F0031H	Pull-up resistor option register 1	PU1		R/W	√	√	–	00H	√	√	√	√	√	√
F0033H	Pull-up resistor option register 3	PU3		R/W	√	√	–	00H	√	√	√	√	√	√
F0034H	Pull-up resistor option register 4	PU4		R/W	√	√	–	00H	√	√	√	√	√	√
F0035H	Pull-up resistor option register 5	PU5		R/W	√	√	–	00H	√	√	√	√	√	√
F0037H	Pull-up resistor option register 7	PU7		R/W	√	√	–	00H	–	√	√	√	√	√
F003CH	Pull-up resistor option register 12	PU12		R/W	√	√	–	00H	√	√	√	√	√	√
F003EH	Pull-up resistor option register 14	PU14		R/W	√	√	–	00H	–	–	–	–	–	√
F0043H	Port input mode register 3	PIM3		R/W	√	√	–	00H	√	√	√	√	√	√
F0047H	Port input mode register 7	PIM7		R/W	√	√	–	00H	–	√	√	√	√	√
F0048H	Port input mode register 8	PIM8		R/W	√	√	–	00H	√	√	√	√	√	√
F0053H	Port output mode register 3	POM3		R/W	√	√	–	00H	√	√	√	√	√	√
F0057H	Port output mode register 7	POM7		R/W	√	√	–	00H	–	√	√	√	√	√
F0060H	Noise filter enable register 0	NFEN0		R/W	√	√	–	00H	√	√	√	√	√	√
F0061H	Noise filter enable register 1	NFEN1		R/W	√	√	–	00H	√	√	√	√	√	√
F0062H	Noise filter enable register 2	NFEN2		R/W	√	√	–	00H	√	√	√	√	√	√
F00E0H	Multiplication/division data register C (L)	MDCL		R	–	–	√	0000H	√	√	√	√	√	√
F00E2H	Multiplication/division data register C (H)	MDCH		R	–	–	√	0000H	√	√	√	√	√	√
F00E8H	Multiplication/division control register	MDUC		R/W	√	√	–	00H	√	√	√	√	√	√
F00F0H	Peripheral enable register 0	PER0		R/W	√	√	–	00H	√	√	√	√	√	√
F00F1H	Peripheral enable register 1	PER1		R/W	√	√	–	00H	√	√	√	√	√	√
F00F2H	Peripheral enable register 2	PER2		R/W	√	√	–	00H	√	√	√	√	√	√
F00F3H	Operation speed mode control register	OSMC		R/W	–	√	–	00H	√	√	√	√	√	√
F00F4H	Regulator mode control register	RMC		R/W	–	√	–	00H	√	√	√	√	√	√
F00F6H	40 MHz internal high-speed oscillation control register	DSCCTL		R/W	√	–	–	00H	√	√	√	√	√	√
F00FEH	BCD adjust result register	BCDADJ		R	–	√	–	00H	√	√	√	√	√	√
F0100H	Serial status register 00	SSR00L	SSR00	R	–	√	√	0000H	√	√	√	√	√	√
F0101H		–			–	–								
F0102H	Serial status register 01	SSR01L	SSR01	R	–	√	√	0000H	√	√	√	√	√	√
F0103H		–			–	–								
F0104H	Serial status register 02	SSR02L	SSR02	R	–	√	√	0000H	√	√	√	√	√	√
F0105H		–			–	–								

Table 3-6. Extended SFR (2nd SFR) List (2/6)

Address	Special Function Register (SFR) Name	Symbol		R/W	Manipulable Bit Range			After Reset	78K0R/IB3	78K0R/IC3 (38-pin)	78K0R/IC3 (44-pin)	78K0R/IC3 (48-pin)	78K0R/ID3	78K0R/IE3
					1-bit	8-bit	16-bit							
F0106H	Serial status register 03	SSR03L	SSR03	R	–	√	√	0000H	√	√	√	√	√	√
F0107H		–			–	–								
F0108H	Serial flag clear trigger register 00	SIR00L	SIR00	R/W	–	√	√	0000H	√	√	√	√	√	√
F0109H		–			–	–								
F010AH	Serial flag clear trigger register 01	SIR01L	SIR01	R/W	–	√	√	0000H	√	√	√	√	√	√
F010BH		–			–	–								
F010CH	Serial flag clear trigger register 02	SIR02L	SIR02	R/W	–	√	√	0000H	√	√	√	√	√	√
F010DH		–			–	–								
F010EH	Serial flag clear trigger register 03	SIR03L	SIR03	R/W	–	√	√	0000H	√	√	√	√	√	√
F010FH		–			–	–								
F0110H	Serial mode register 00	SMR00		R/W	–	–	√	0020H	√	√	√	√	√	√
F0111H														
F0112H	Serial mode register 01	SMR01		R/W	–	–	√	0020H	√	√	√	√	√	√
F0113H														
F0114H	Serial mode register 02	SMR02		R/W	–	–	√	0020H	√	√	√	√	√	√
F0115H														
F0116H	Serial mode register 03	SMR03		R/W	–	–	√	0020H	√	√	√	√	√	√
F0117H														
F0118H	Serial communication operation setting register 00	SCR00		R/W	–	–	√	0087H	√	√	√	√	√	√
F0119H														
F011AH	Serial communication operation setting register 01	SCR01		R/W	–	–	√	0087H	√	√	√	√	√	√
F011BH														
F011CH	Serial communication operation setting register 02	SCR02		R/W	–	–	√	0087H	√	√	√	√	√	√
F011DH														
F011EH	Serial communication operation setting register 03	SCR03		R/W	–	–	√	0087H	√	√	√	√	√	√
F011FH														
F0120H	Serial channel enable status register 0	SE0L	SE0	R	√	√	√	0000H	√	√	√	√	√	√
F0121H		–			–	–								
F0122H	Serial channel start trigger register 0	SS0L	SS0	R/W	√	√	√	0000H	√	√	√	√	√	√
F0123H		–			–	–								
F0124H	Serial channel stop trigger register 0	ST0L	ST0	R/W	√	√	√	0000H	√	√	√	√	√	√
F0125H		–			–	–								
F0126H	Serial clock select register 0	SPS0L	SPS0	R/W	–	√	√	0000H	√	√	√	√	√	√
F0127H		–			–	–								
F0128H	Serial output register 0	SO0		R/W	–	–	√	0F0FH	√	√	√	√	√	√
F0129H														

Table 3-6. Extended SFR (2nd SFR) List (3/6)

Address	Special Function Register (SFR) Name	Symbol		R/W	Manipulable Bit Range			After Reset	78K0R/IB3	78K0R/IC3 (38-pin)	78K0R/IC3 (44-pin)	78K0R/IC3 (48-pin)	78K0R/ID3	78K0R/IE3
					1-bit	8-bit	16-bit							
F012AH	Serial output enable register 0	SOE0L	SOE0	R/W	√	√	√	0000H	√	√	√	√	√	√
F012BH		–			–	–								
F0134H	Serial output level register 0	SOL0L	SOL0	R/W	–	√	√	0000H	√	√	√	√	√	√
F0135H		–			–	–								
F0180H	Timer counter register 00	TCR00		R	–	–	√	FFFFH	√	√	√	√	√	√
F0181H														
F0182H	Timer counter register 01	TCR01		R	–	–	√	FFFFH	√	√	√	√	√	√
F0183H														
F0184H	Timer counter register 02	TCR02		R	–	–	√	FFFFH	√	√	√	√	√	√
F0185H														
F0186H	Timer counter register 03	TCR03		R	–	–	√	FFFFH	√	√	√	√	√	√
F0187H														
F0188H	Timer counter register 04	TCR04		R	–	–	√	FFFFH	√	√	√	√	√	√
F0189H														
F018AH	Timer counter register 05	TCR05		R	–	–	√	FFFFH	√	√	√	√	√	√
F018BH														
F018CH	Timer counter register 06	TCR06		R	–	–	√	FFFFH	√	√	√	√	√	√
F018DH														
F018EH	Timer counter register 07	TCR07		R	–	–	√	FFFFH	√	√	√	√	√	√
F018FH														
F0190H	Timer mode register 00	TMR00		R/W	–	–	√	0000H	√	√	√	√	√	√
F0191H														
F0192H	Timer mode register 01	TMR01		R/W	–	–	√	0000H	√	√	√	√	√	√
F0193H														
F0194H	Timer mode register 02	TMR02		R/W	–	–	√	0000H	√	√	√	√	√	√
F0195H														
F0196H	Timer mode register 03	TMR03		R/W	–	–	√	0000H	√	√	√	√	√	√
F0197H														
F0198H	Timer mode register 04	TMR04		R/W	–	–	√	0000H	√	√	√	√	√	√
F0199H														
F019AH	Timer mode register 05	TMR05		R/W	–	–	√	0000H	√	√	√	√	√	√
F019BH														
F019CH	Timer mode register 06	TMR06		R/W	–	–	√	0000H	√	√	√	√	√	√
F019DH														
F019EH	Timer mode register 07	TMR07		R/W	–	–	√	0000H	√	√	√	√	√	√
F019FH														

Table 3-6. Extended SFR (2nd SFR) List (4/6)

Address	Special Function Register (SFR) Name	Symbol	R/W	Manipulable Bit Range			After Reset	78K0R/IB3	78K0R/IC3 (38-pin)	78K0R/IC3 (44-pin)	78K0R/IC3 (48-pin)	78K0R/ID3	78K0R/IE3
				1-bit	8-bit	16-bit							
F01A0H F01A1H	Timer status register 00	TSR00	R	–	–	√	0000H	√	√	√	√	√	√
F01A2H F01A3H	Timer status register 01	TSR01	R	–	–	√	0000H	√	√	√	√	√	√
F01A4H F01A5H	Timer status register 02	TSR02	R	–	–	√	0000H	√	√	√	√	√	√
F01A6H F01A7H	Timer status register 03	TSR03	R	–	–	√	0000H	√	√	√	√	√	√
F01A8H F01A9H	Timer status register 04	TSR04	R	–	–	√	0000H	√	√	√	√	√	√
F01AAH F01ABH	Timer status register 05	TSR05	R	–	–	√	0000H	√	√	√	√	√	√
F01ACH F01ADH	Timer status register 06	TSR06	R	–	–	√	0000H	√	√	√	√	√	√
F01AEH F01AFH	Timer status register 07	TSR07	R	–	–	√	0000H	√	√	√	√	√	√
F01B0H F01B1H	Timer channel enable status register 0	TE0	R	–	–	√	0000H	√	√	√	√	√	√
F01B2H F01B3H	Timer channel start trigger register 0	TS0	R/W	–	–	√	0000H	√	√	√	√	√	√
F01B4H F01B5H	Timer channel stop trigger register 0	TT0	R/W	–	–	√	0000H	√	√	√	√	√	√
F01B6H F01B7H	Timer clock select register 0	TPS0	R/W	–	–	√	0000H	√	√	√	√	√	√
F01B8H F01B9H	Timer channel output register 0	TO0	R/W	–	–	√	0000H	√	√	√	√	√	√
F01BAH F01BBH	Timer channel output enable register 0	TOE0	R/W	–	–	√	0000H	√	√	√	√	√	√
F01BCH F01BDH	Timer channel output level register 0	TOL0	R/W	–	–	√	0000H	√	√	√	√	√	√
F01BEH F01BFH	Timer channel output mode register 0	TOM0	R/W	–	–	√	0000H	√	√	√	√	√	√
F01C0H F01C1H	Timer counter register 08	TCR08	R	–	–	√	FFFFH	√	√	√	√	√	√
F01C2H F01C3H	Timer counter register 09	TCR09	R	–	–	√	FFFFH	√	√	√	√	√	√
F01C4H F01C5H	Timer counter register 10	TCR10	R	–	–	√	FFFFH	√	√	√	√	√	√

Table 3-6. Extended SFR (2nd SFR) List (5/6)

Address	Special Function Register (SFR) Name	Symbol	R/W	Manipulable Bit Range			After Reset	78K0R/IB3	78K0R/IC3 (38-pin)	78K0R/IC3 (44-pin)	78K0R/IC3 (48-pin)	78K0R/ID3	78K0R/IE3
				1-bit	8-bit	16-bit							
F01C6H	Timer counter register 11	TCR11	R	–	–	√	FFFFH	√	√	√	√	√	√
F01C7H													
F01C8H	Timer mode register 08	TMR08	R/W	–	–	√	0000H	√	√	√	√	√	√
F01C9H													
F01CAH	Timer mode register 09	TMR09	R/W	–	–	√	0000H	√	√	√	√	√	√
F01CBH													
F01CCH	Timer mode register 10	TMR10	R/W	–	–	√	0000H	√	√	√	√	√	√
F01CDH													
F01CEH	Timer mode register 11	TMR11	R/W	–	–	√	0000H	√	√	√	√	√	√
F01CFH													
F01D0H	Timer status register 08	TSR08	R	–	–	√	0000H	√	√	√	√	√	√
F01D1H													
F01D2H	Timer status register 09	TSR09	R	–	–	√	0000H	√	√	√	√	√	√
F01D3H													
F01D4H	Timer status register 10	TSR10	R	–	–	√	0000H	√	√	√	√	√	√
F01D5H													
F01D6H	Timer status register 11	TSR11	R	–	–	√	0000H	√	√	√	√	√	√
F01D7H													
F01E8H	Timer triangle wave output mode register 0	TOT0	R/W	–	–	√	0000H	√	√	√	√	√	√
F01EAH	Timer real-time output enable register 0	TRE0	R/W	–	–	√	0000H	√	√	√	√	√	√
F01ECH	Timer real-time output register 0	TRO0	R/W	–	–	√	0000H	√	√	√	√	√	√
F01EEH	Timer real-time control register 0	TRC0	R/W	–	–	√	0000H	√	√	√	√	√	√
F01F0H	Timer modulation output enable register 0	TME0	R/W	–	–	√	0000H	√	√	√	√	√	√
F01F2H	Timer dead-time output enable register 0	TDE0	R/W	–	–	√	0000H	√	√	√	√	√	√
F0220H	TAU option mode register	OPMR	R/W	–	–	√	0000H	√	√	√	√	√	√
F0222H	TAU option status register	OPSR	R	–	–	√	0000H	√	√	√	√	√	√
F0224H	TAU option Hi-Z start trigger register	OPHS	R/W	–	–	√	0000H	√	√	√	√	√	√
F0226H	TAU option Hi-Z stop trigger register	OPHT	R/W	–	–	√	0000H	√	√	√	√	√	√
F0228H	TAU option control register	OPCR	R/W	–	–	√	0000H	√	√	√	√	√	√

Table 3-6. Extended SFR (2nd SFR) List (6/6)

Address	Special Function Register (SFR) Name	Symbol	R/W	Manipulable Bit Range			After Reset	78K0R/IB3	78K0R/IC3 (38-pin)	78K0R/IC3 (44-pin)	78K0R/IC3 (48-pin)	78K0R/ID3	78K0R/IE3
				1-bit	8-bit	16-bit							
F0230H	IICA control register 0	IICCTL0	R/W	√	√	–	00H	–	–	–	√	√	√
F0231H	IICA control register 1	IICCTL1	R/W	√	√	–	00H	–	–	–	√	√	√
F0232H	IICA low-level width setting register	IICWL	R/W	–	√	–	FFH	–	–	–	√	√	√
F0233H	IICA high-level width setting register	IICWH	R/W	–	√	–	FFH	–	–	–	√	√	√
F0234H	Slave address register	SVA	R/W	–	√	–	00H	–	–	–	√	√	√
F0240H	Programmable gain amplifier control register	OAM	R/W	√	√	–	00H	√	√	√	√	√	√
F0241H	Comparator 0 control register	C0CTL	R/W	√	√	–	00H	√	√	√	√	√	√
F0242H	Comparator 0 internal reference voltage setting register	C0RVM	R/W	√	√	–	00H	√	√	√	√	√	√
F0243H	Comparator 1 control register	C1CTL	R/W	√	√	–	00H	√	√	√	√	√	√
F0244H	Comparator 1 internal reference voltage setting register	C1RVM	R/W	√	√	–	00H	√	√	√	√	√	√

Remark For SFRs in the SFR area, see **Table 3-5 SFR List**.

3.3 Instruction Address Addressing

3.3.1 Relative addressing

[Function]

Relative addressing stores in the program counter (PC) the result of adding a displacement value included in the instruction word (signed complement data: −128 to +127 or −32768 to +32767) to the program counter (PC)'s value (the start address of the next instruction), and specifies the program address to be used as the branch destination. Relative addressing is applied only to branch instructions.

Figure 3-16. Outline of Relative Addressing

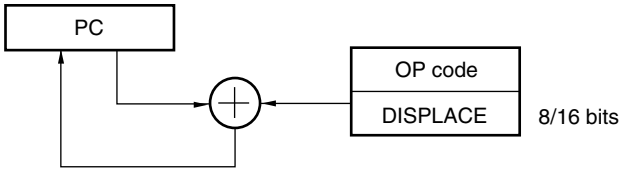

3.3.2 Immediate addressing

[Function]

Immediate addressing stores immediate data of the instruction word in the program counter, and specifies the program address to be used as the branch destination.

For immediate addressing, CALL !!addr20 or BR !!addr20 is used to specify 20-bit addresses and CALL !addr16 or BR !addr16 is used to specify 16-bit addresses. 0000 is set to the higher 4 bits when specifying 16-bit addresses.

Figure 3-17. Example of CALL !!addr20/BR !!addr20

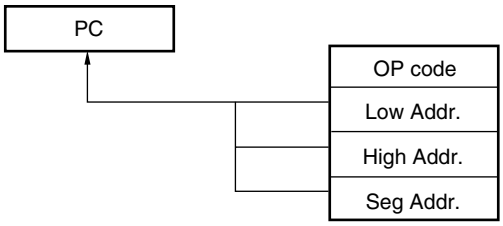

Figure 3-18. Example of CALL !addr16/BR !addr16

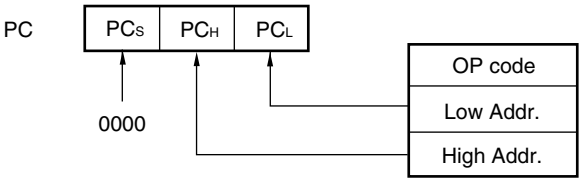

3.3.3 Table indirect addressing

[Function]

Table indirect addressing specifies a table address in the CALLT table area (0080H to 00BFH) with the 5-bit immediate data in the instruction word, stores the contents at that table address and the next address in the program counter (PC) as 16-bit data, and specifies the program address. Table indirect addressing is applied only for CALLT instructions.

In the 78K0R microcontrollers, branching is enabled only to the 64 KB space from 00000H to 0FFFFH.

Figure 3-19. Outline of Table Indirect Addressing

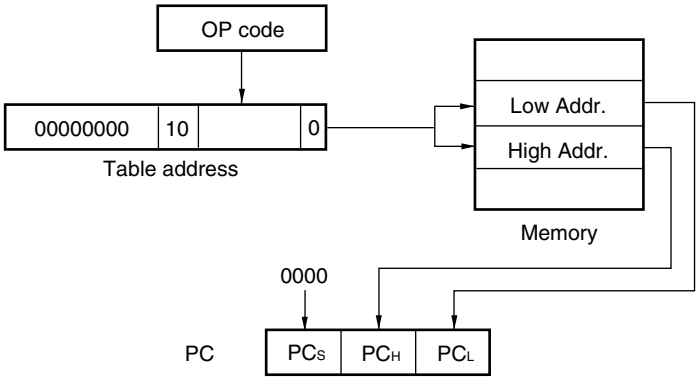

3.3.4 Register direct addressing

[Function]

Register direct addressing stores in the program counter (PC) the contents of a general-purpose register pair (AX/BC/DE/HL) and CS register of the current register bank specified with the instruction word as 20-bit data, and specifies the program address. Register direct addressing can be applied only to the CALL AX, BC, DE, HL, and BR AX instructions.

Figure 3-20. Outline of Register Direct Addressing

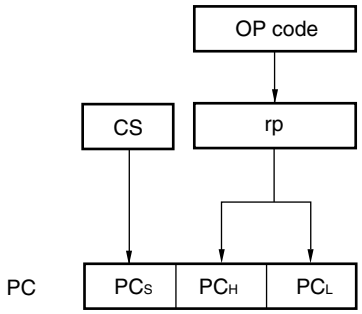

3.4 Addressing for Processing Data Addresses

3.4.1 Implied addressing

[Function]

Instructions for accessing registers (such as accumulators) that have special functions are directly specified with the instruction word, without using any register specification field in the instruction word.

[Operand format]

Because implied addressing can be automatically employed with an instruction, no particular operand format is necessary.

Implied addressing can be applied only to MULU X.

Figure 3-21. Outline of Implied Addressing

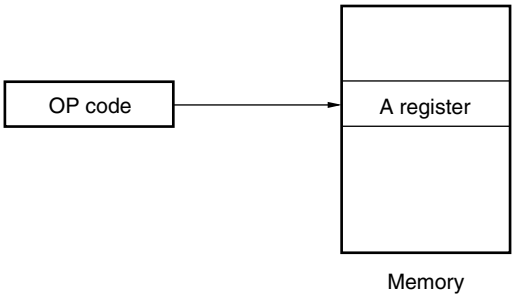

3.4.2 Register addressing

[Function]

Register addressing accesses a general-purpose register as an operand. The instruction word of 3-bit long is used to select an 8-bit register and the instruction word of 2-bit long is used to select a 16-bit register.

[Operand format]

Identifier	Description
r	X, A, C, B, E, D, L, H
rp	AX, BC, DE, HL

Figure 3-22. Outline of Register Addressing

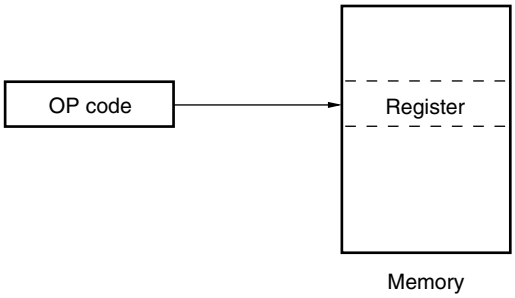

3.4.3 Direct addressing

[Function]

Direct addressing uses immediate data in the instruction word as an operand address to directly specify the target address.

[Operand format]

Identifier	Description
ADDR16	Label or 16-bit immediate data (only the space from F0000H to FFFFFH is specifiable)
ES: ADDR16	Label or 16-bit immediate data (higher 4-bit addresses are specified by the ES register)

Figure 3-23. Example of ADDR16

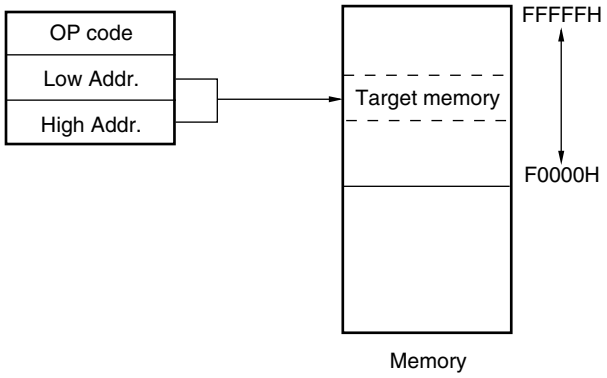

Figure 3-24. Example of ES:ADDR16

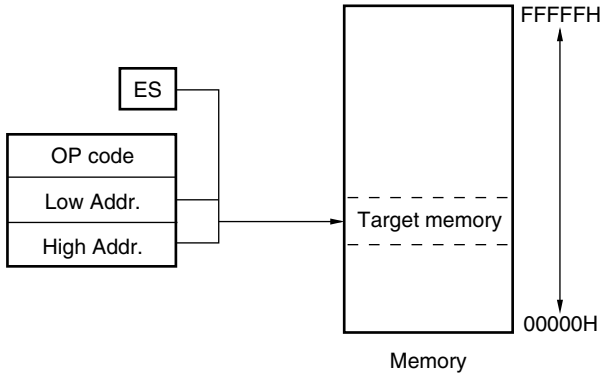

3.4.4 Short direct addressing

[Function]

Short direct addressing directly specifies the target addresses using 8-bit data in the instruction word. This type of addressing is applied only to the space from FFE20H to FFF1FH.

[Operand format]

Identifier	Description
SADDR	Label, FFE20H to FFF1FH immediate data, or 0FE20H to 0FF1FH immediate data (only the space from FFE20H to FFF1FH is specifiable)
SADDRP	Label, FFE20H to FFF1FH immediate data, or 0FE20H to 0FF1FH immediate data (even address only) (only the space from FFE20H to FFF1FH is specifiable)

Figure 3-25. Outline of Short Direct Addressing

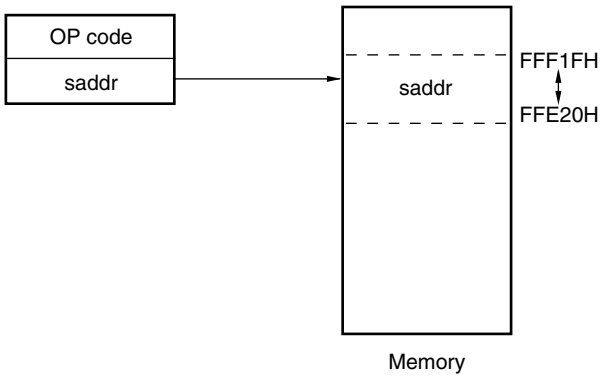

Remark SADDR and SADDRP are used to describe the values of addresses FE20H to FF1FH with 16-bit immediate data (higher 4 bits of actual address are omitted), and the values of addresses FFE20H to FFF1FH with 20-bit immediate data.

Regardless of whether SADDR or SADDRP is used, addresses within the space from FFE20H to FFF1FH are specified for the memory.

3.4.5 SFR addressing

[Function]

SFR addressing directly specifies the target SFR addresses using 8-bit data in the instruction word. This type of addressing is applied only to the space from FFF00H to FFFFFH.

[Operand format]

Identifier	Description
SFR	SFR name
SFRP	16-bit-manipulatable SFR name (even address only)

Figure 3-26. Outline of SFR Addressing

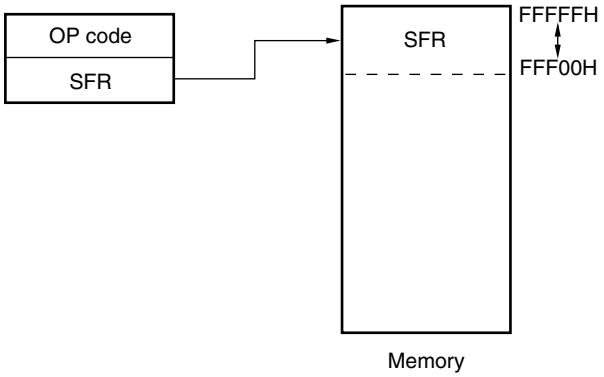

3.4.6 Register indirect addressing

[Function]

Register indirect addressing directly specifies the target addresses using the contents of the register pair specified with the instruction word as an operand address.

[Operand format]

Identifier	Description
–	[DE], [HL] (only the space from F0000H to FFFFFH is specifiable)
–	ES:[DE], ES:[HL] (higher 4-bit addresses are specified by the ES register)

Figure 3-27. Example of [DE], [HL]

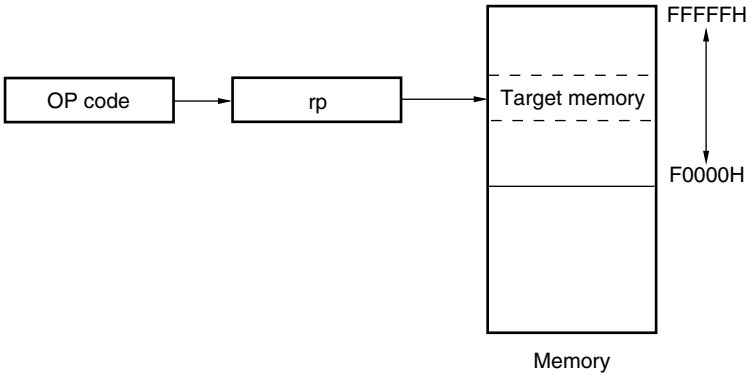

Figure 3-28. Example of ES:[DE], ES:[HL]

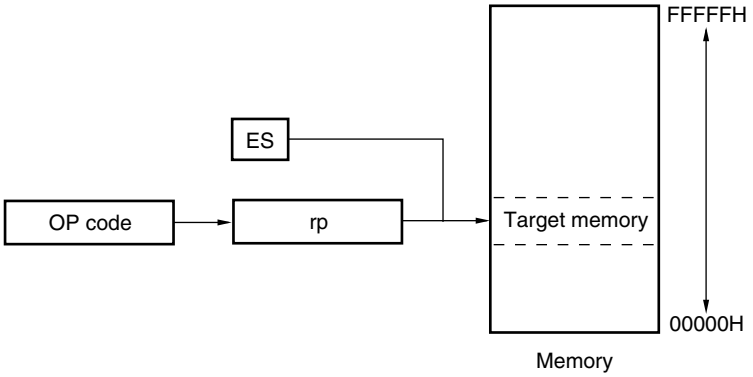

3.4.7 Based addressing

[Function]

Based addressing uses the contents of a register pair specified with the instruction word as a base address, and 8-bit immediate data or 16-bit immediate data as offset data. The sum of these values is used to specify the target address.

[Operand format]

Identifier	Description
–	[HL + byte], [DE + byte], [SP + byte] (only the space from F0000H to FFFFFH is specifiable)
–	word[B], word[C] (only the space from F0000H to FFFFFH is specifiable)
–	word[BC] (only the space from F0000H to FFFFFH is specifiable)
–	ES:[HL + byte], ES:[DE + byte] (higher 4-bit addresses are specified by the ES register)
–	ES:word[B], ES:word[C] (higher 4-bit addresses are specified by the ES register)
–	ES:word[BC] (higher 4-bit addresses are specified by the ES register)

Figure 3-29. Example of [SP+byte]

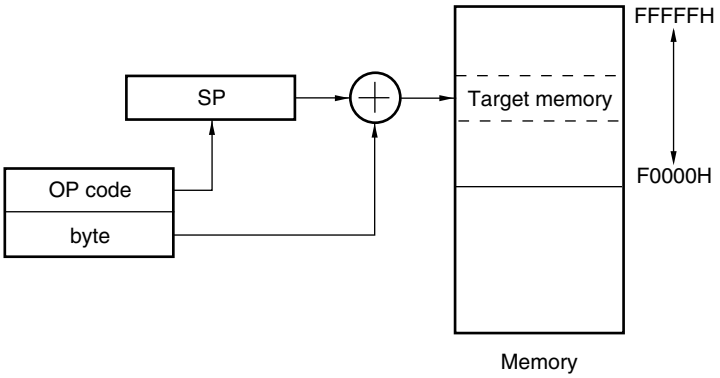

Figure 3-30. Example of [HL + byte], [DE + byte]

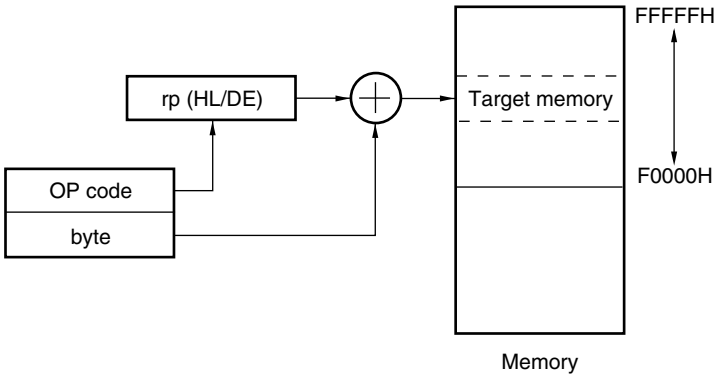

Figure 3-31. Example of word[B], word[C]

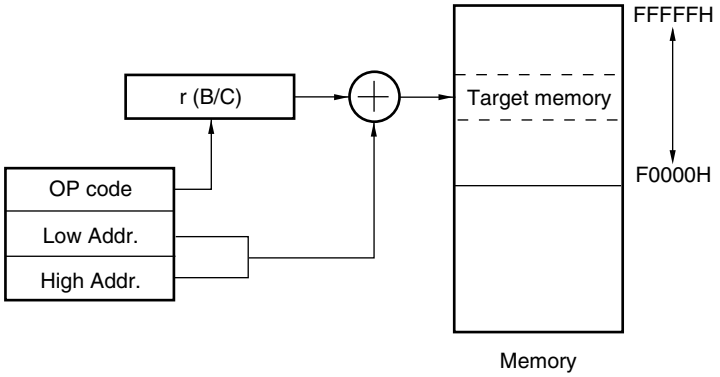

Figure 3-32. Example of word[BC]

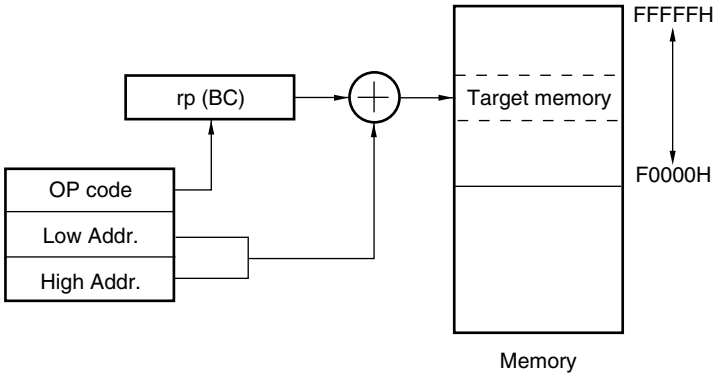

Figure 3-33. Example of ES:[HL + byte], ES:[DE + byte]

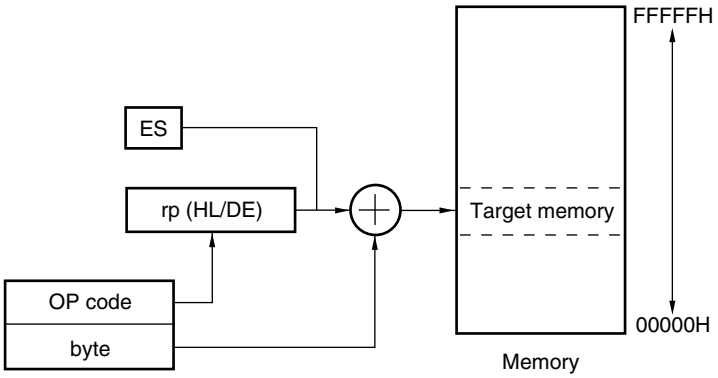

Figure 3-34. Example of ES:word[B], ES:word[C]

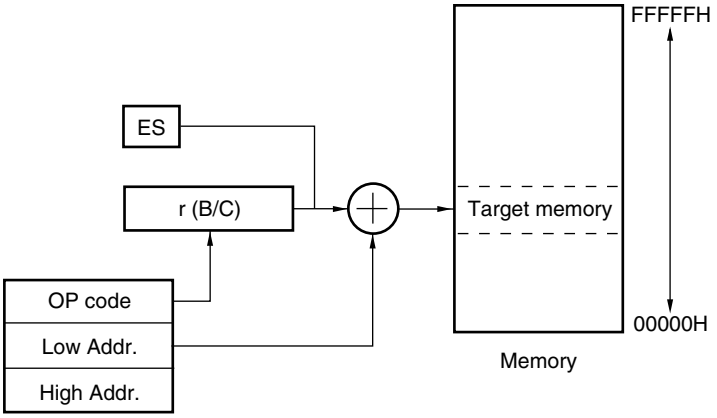

Figure 3-35. Example of ES:word[BC]

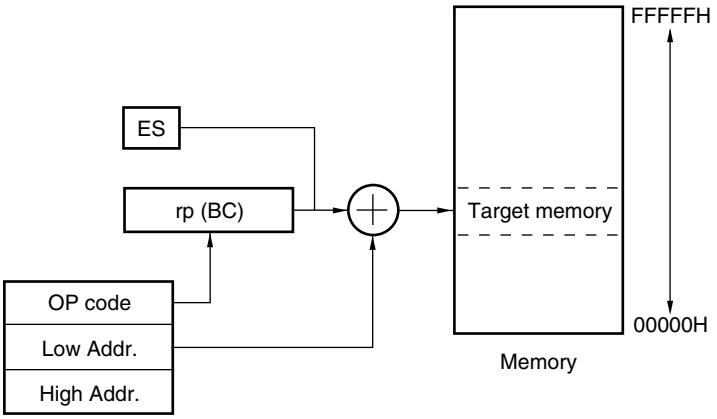

3.4.8 Based indexed addressing

[Function]

Based indexed addressing uses the contents of a register pair specified with the instruction word as the base address, and the content of the B register or C register similarly specified with the instruction word as offset address. The sum of these values is used to specify the target address.

[Operand format]

Identifier	Description
–	[HL+B], [HL+C] (only the space from F0000H to FFFFFH is specifiable)
–	ES:[HL+B], ES:[HL+C] (higher 4-bit addresses are specified by the ES register)

Figure 3-36. Example of [HL+B], [HL+C]

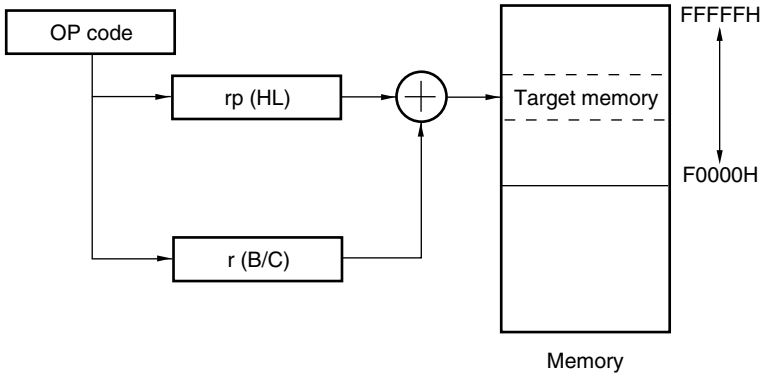

Figure 3-37. Example of ES:[HL+B], ES:[HL+C]

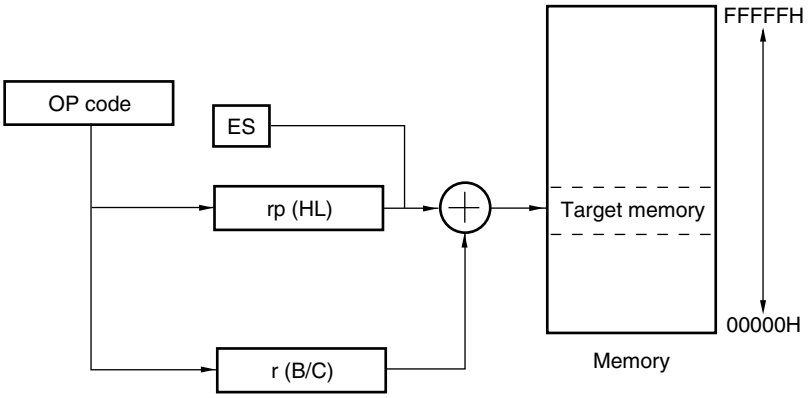

3.4.9 Stack addressing

[Function]

The stack area is indirectly addressed with the stack pointer (SP) contents. This addressing is automatically employed when the PUSH, POP, subroutine call, and return instructions are executed or the register is saved/restored upon generation of an interrupt request.

Stack addressing is applied only to the internal RAM area.

[Operand format]

Identifier	Description
–	PUSH AX/BC/DE/HL POP AX/BC/DE/HL CALL/CALLT RET BRK RETB (Interrupt request generated) RETI

CHAPTER 4 PORT FUNCTIONS

4.1 Port Functions

There are three types of pin I/O buffer power supplies: AV_{REF}, EV_{DD}, and V_{DD}. The relationship between these power supplies and the pins is shown below.

Table 4-1. Pin I/O Buffer Power Supplies (78K0R/IB3)

- 30-pin plastic SSOP (7.62 mm (300))

Power Supply	Corresponding Pins
AV_{REF}	P20 to P25, P80, P81, P83
V_{DD}	• Port pins other than P20 to P25, P80, P81, P83 • Pins other than port pins

Table 4-2. Pin I/O Buffer Power Supplies (78K0R/IC3)

- 38-pin plastic SSOP (7.62 mm (300))
- 44-pin plastic LQFP (10x10)
- 48-pin plastic TQFP (fine pitch) (7x7)

Power Supply	Corresponding Pins
AV_{REF}	P20 to P27, P150 , P151 (44-pin products), P150 to P152 (48-pin products), P80 to P83
V_{DD}	• Port pins other than P20 to P27, P150 to P152, P80 to P83 • Pins other than port pins

Table 4-3. Pin I/O Buffer Power Supplies (78K0R/ID3)

- 52-pin plastic LQFP (10x10)

Power Supply	Corresponding Pins
AV_{REF}	P20 to P27, P150 to P152, P80 to P83
V_{DD}	• Port pins other than P20 to P27, P150 to P152, P80 to P83 • Pins other than port pins

Table 4-4. Pin I/O Buffer Power Supplies (78K0R/IE3)

- 64-pin plastic LQFP (12x12)
- 64-pin plastic LQFP (fine pitch) (10x10)

Power Supply	Corresponding Pins
AV_{REF}	P20 to P27, P150 to P153, P80 to P83
EV_{DD}	• Port pins other than P20 to P27, P150 to P153, P80 to P83, P121 to P124 • the $\overline{RESET}$ pin and FLMD0 pin
V_{DD}	• P121 to P124 • Pins other than port pins (other than the $\overline{RESET}$ pin and FLMD0 pin)

The 78K0R/Ix3 products are provided with the digital I/O ports, which enable variety of control operations. The functions of each port are shown in Table 4-5.

In addition to the function as digital I/O ports, these ports have several alternate functions. For details of the alternate functions, see **CHAPTER 2 PIN FUNCTIONS**.

Table 4-5. Port functions (1/4)

78K0R/IB3	78K0R/IC3 (38-pin)	78K0R/IC3 (44-pin)	78K0R/IC3 (48-pin)	78K0R/ID3	78K0R/IE3	Function Name	I/O	Function	After Reset	Alternate Function
–	–	–	–	√	√	P00	I/O	Port 0. I/O port. Input/output can be specified in 1-bit units. Use of an on-chip pull-up resistor can be specified by a software setting.	Input port	TI00
–	–	–	–	√	√	P01				TO00
√	√	√	√	√	√	P10	I/O	Port 1. I/O port. Input/output can be specified in 1-bit units. Use of an on-chip pull-up resistor can be specified by a software setting.	Input port	<IB3> TI02/TO02/TxD0 <Other than the above> TI02/TO02
√	√	√	√	√	√	P11				<IB3> TI03/TO03/RxD0 <Other than the above> TI03/TO03
√	√	√	√	√	√	P12				TI04/TO04
√	√	√	√	√	√	P13				TI05/TO05
–	–	–	–	–	√	P14				TI06/TO06
–	–	–	–	–	√	P15				TI07/TO07
–	–	–	–	–	√	P16				TI08/TO08
–	–	–	–	–	√	P17				TI09/TO09
√	√	√	√	√	√	P20	I/O	Port 2. I/O port. Input/output can be specified in 1-bit units.	Digital input port	ANI0
√	√	√	√	√	√	P21				ANI1
√	√	√	√	√	√	P22				ANI2
√	√	√	√	√	√	P23				ANI3
√	√	√	√	√	√	P24				ANI4
√	√	√	√	√	√	P25				ANI5
–	√	√	√	√	√	P26				ANI6
–	√	√	√	√	√	P27				ANI7

Table 4-5. Port functions (2/4)

78K0R/IB3	78K0R/IC3 (38-pin)	78K0R/IC3 (44-pin)	78K0R/IC3 (48-pin)	78K0R/ID3	78K0R/IE3	Function Name	I/O	Function	After Reset	Alternate Function
√	√	√	√	√	√	P30	I/O	Port 3. I/O port. Input of P31 and P32 can be set to TTL buffer. Output of P30 to P32 can be set to N-ch open-drain output (V_{DD} tolerance). Input/output can be specified in 1-bit units. Use of an on-chip pull-up resistor can be specified by a software setting.	Input port	SO10/TxD1/TO11
√	√	√	√	√	√	P31				<IE3> SI10/RxD1/ SDA10/INTP1 <Other than the above> SI10/RxD1/ SDA10/INTP1/ TI09
√	√	√	√	√	√	P32				$\overline{\text{SCK10}}$/SCL10/ INTP2
–	–	–	–	–	√	P33				–
√	√	√	√	√	√	P40 Note	I/O	Port 4. I/O port. Input/output can be specified in 1-bit units. Use of an on-chip pull-up resistor can be specified by a software setting.	Input port	TOOL0
√	√	√	√	√	√	P41				TOOL1
–	–	–	–	–	√	P42				–
–	–	–	–	–	√	P43				–
√	√	√	√	√	√	P50	I/O	Port 5. I/O port. Input/output can be specified in 1-bit units. Use of an on-chip pull-up resistor can be specified by a software setting.	Input port	<IE3> – <Other than the above > TI06/TO06
√	√	√	√	√	√	P51				<IE3> – <Other than the above > TI07/TO07
–	√	√	√	√	√	P52				SLTI/SLTO
–	–	–	–	–	√	P53				–
–	–	–	√	√	√	P60	I/O	Port 6. I/O port. Output of P60 and P61 is N-ch open-drain output (6 V tolerance). Input/output can be specified in 1-bit units.	Input port	SCL0
–	–	–	√	√	√	P61				SDA0

Note If on-chip debugging is enabled by using an option byte, be sure to pull up the P40/TOOL0 pin externally (see **Caution** in **2.2.5 P40 to P43 (port 4)**).

Table 4-5. Port functions (3/4)

78K0R/IB3	78K0R/IC3 (38-pin)	78K0R/IC3 (44-pin)	78K0R/IC3 (48-pin)	78K0R/ID3	78K0R/IE3	Function Name	I/O	Function	After Reset	Alternate Function
–	–	√	√	√	√	P70	I/O	Port 7. I/O port. Input of P71, P72, P74, and P75 can be set to TTL buffer. Output of P70, P72, P73, and P75 can be set to N-ch open-drain output (V_{DD} tolerance). Input/output can be specified in 1-bit units. Use of an on-chip pull-up resistor can be specified by a software setting.	Input port	SO01/INTP4
–	–	√	√	√	√	P71				SI01/INTP5
–	√	√	√	√	√	P72				<38-pin product of IC3> INTP6/RxD0 <Other than the above > $\overline{\text{SCK01}}$/INTP6
–	√	√	√	√	√	P73				<38-pin product of IC3> TxD0/TO10 <Other than the above > SO00/TxD0/TO10
–	–	√	√	√	√	P74				SI00/RxD0/TI10
–	–	√	√	√	√	P75				$\overline{\text{SCK00}}$/TI11
–	–	–	–	√	√	P76				–
–	–	–	–	√	√	P77				–
√	√	√	√	√	√	P80	I/O	Port 8. I/O port. Inputs/output can be specified in 1-bit units. Inputs of P80 to P83 can be set as comparator inputs or programmable gain amplifier inputs.	Analog input	CMP0P/TMOFF0/INTP3/PGAI
√	√	√	√	√	√	P81				CMP0M
–	√	√	√	√	√	P82				CMP1P/TMOFF1/INTP7
√	√	√	√	√	√	P83				CMP1M

Table 4-5. Port functions (4/4)

78K0R/IB3	78K0R/IC3 (38-pin)	78K0R/IC3 (44-pin)	78K0R/IC3 (48-pin)	78K0R/ID3	78K0R/IE3	Function Name	I/O	Function	After Reset	Alternate Function
√	√	√	√	√	√	P120	I/O	Port 12. I/O port and input port. For only P120, input/output can be specified in 1-bit units. For only P120, use of an on-chip pull-up resistor can be specified by a software setting.	Input port	INTP0/EXLVI
√	√	√	√	√	√	P121	Input			<IB3 and 38-pin products of IC3> X1/INTP4 <Other than the above > X1
√	√	√	√	√	√	P122				<IB3 and 38-pin products of IC3> X2/EXCLK/INTP5 <Other than the above > X2/EXCLK
–	√	√	√	√	√	P123				XT1
–	√	√	√	√	√	P124				XT2
–	–	–	√	√	√	P140	Output	Port 14. Output port and I/O port. For only P141, input/output can be specified in 1-bit units. For only P141, use of an on-chip pull-up resistor can be specified by a software setting.	Output port	PCLBUZ0
–	–	–	–	–	√	P141	I/O		Input port	PCLBUZ1
–	–	√	√	√	√	P150	I/O	Port 15. I/O port. Input/output can be specified in 1-bit units.	Digital input port	ANI8
–	–	√	√	√	√	P151				ANI9
–	–	–	√	√	√	P152				ANI10
–	–	–	–	–	√	P153				ANI11

4.2 Port Configuration

Ports include the following hardware.

Table 4-6. Port Configuration (1/2)

Item	Configuration
Control registers	• 78K0R/IB3 Port mode registers (PM1 to PM5, PM8, PM12) Port registers (P1 to P5, P8, P12) Pull-up resistor option registers (PU1, PU3 to PU5, PU12) Port input mode registers (PIM3, PIM8) Port output mode registers (POM3) A/D port configuration register (ADPC) • 78K0R/IC3 (38-pin products) Port mode registers (PM1 to PM5, PM7, PM8, PM12) Port registers (P1 to P5, P7, P8, P12) Pull-up resistor option registers (PU1, PU3 to PU5, PU7, PU12) Port input mode registers (PIM3, PIM7, PIM8) Port output mode registers (POM3, POM7) A/D port configuration register (ADPC) • 78K0R/IC3 (44-pin products) Port mode registers (PM1 to PM5, PM7, PM8, PM12, PM15) Port registers (P1 to P5, P7, P8, P12, P15) Pull-up resistor option registers (PU1, PU3 to PU5, PU7, PU12) Port input mode registers (PIM3, PIM7, PIM8) Port output mode registers (POM3, POM7) A/D port configuration register (ADPC) • 78K0R/IC3 (48-pin products) Port mode registers (PM1 to PM8, PM12, PM15) Port registers (P1 to P8, P12, P14, P15) Pull-up resistor option registers (PU1, PU3 to PU5, PU7, PU12) Port input mode registers (PIM3, PIM7, PIM8) Port output mode registers (POM3, POM7) • 78K0R/ID3 Port mode registers (PM0 to PM8, PM12, PM15) Port registers (P0 to P8, P12, P14, P15) Pull-up resistor option registers (PU0, PU1, PU3 to PU5, PU7, PU12) Port input mode registers (PIM3, PIM7, PIM8) Port output mode registers (POM3, POM7) A/D port configuration register (ADPC) • 78K0R/IE3 Port mode registers (PM0 to PM8, PM12, PM14, PM15) Port registers (P0 to P8, P12, P14, P15) Pull-up resistor option registers (PU0, PU1, PU3 to PU5, PU7, PU12, PU14) Port input mode registers (PIM3, PIM7, PIM8) Port output mode registers (POM3, POM7) A/D port configuration register (ADPC)

Table 4-6. Port Configuration (2/2)

Item	Configuration
Port	• 78K0R/IB3 Total: 23 (CMOS I/O: 21, CMOS input: 2) • 78K0R/IC3 (38-pin products) Total: 31 (CMOS I/O: 27, CMOS input: 4,) • 78K0R/IC3 (44-pin products) Total: 37 (CMOS I/O: 33, CMOS input: 4) • 78K0R/IC3 (48-pin products) Total: 41 (CMOS I/O: 34, CMOS input: 4, CMOS output: 1, N-ch open drain I/O: 2) • 78K0R/ID3 Total: 45 (CMOS I/O: 38, CMOS input: 4, CMOS output: 1, N-ch open drain I/O: 2) • 78K0R/IE3 Total: 55 (CMOS I/O: 48, CMOS input: 4, CMOS output: 1, N-ch open drain I/O: 2)
Pull-up resistor	• 78K0R/IB3 Total: 12 • 78K0R/IC3 (38-pin products) Total: 15 • 78K0R/IC3 (44-pin products) Total: 19 • 78K0R/IC3 (48-pin products) Total: 19 • 78K0R/ID3 Total: 23 • 78K0R/IE3 Total: 32

4.2.1 Port 0

	78K0R/IB3	78K0R/IC3			78K0R/ID3	78K0R/IE3
		(38-pin)	(44-pin)	(48-pin)		
P00/TI00	–	–	–	–	√	√
P01/TO00	–	–	–	–	√	√

Port 0 is I/O port with an output latch. Port 0 can be set to the input mode or output mode in 1-bit units using port mode register 0 (PM0). When the P00 and P01 pins are used as an input port, use of an on-chip pull-up resistor can be specified in 1-bit units by pull-up resistor option register 0 (PU0).

This port can also be used for timer I/O.

Reset signal generation sets port 0 to input mode.

Figures 4-1 and 4-2 shows block diagrams of port 0.

Cautions 1. To use P01/TO00 as a general-purpose port, set bit 0 (TO00) of timer output register 0 (TO0) and bit 0 (TOE00) of timer output enable register 0 (TOE0) to "0", which is the same as their default status setting.

2. To use the crest interrupt signal (INTTMM0) and valley interrupt signal (INTTMV0) of the inverter control function, output from timer channel 0 must be enabled (by setting TOE00 to 1).
Therefore, P01/TO00 cannot be used as a general-purpose output port.

Figure 4-1. Block Diagram of P00

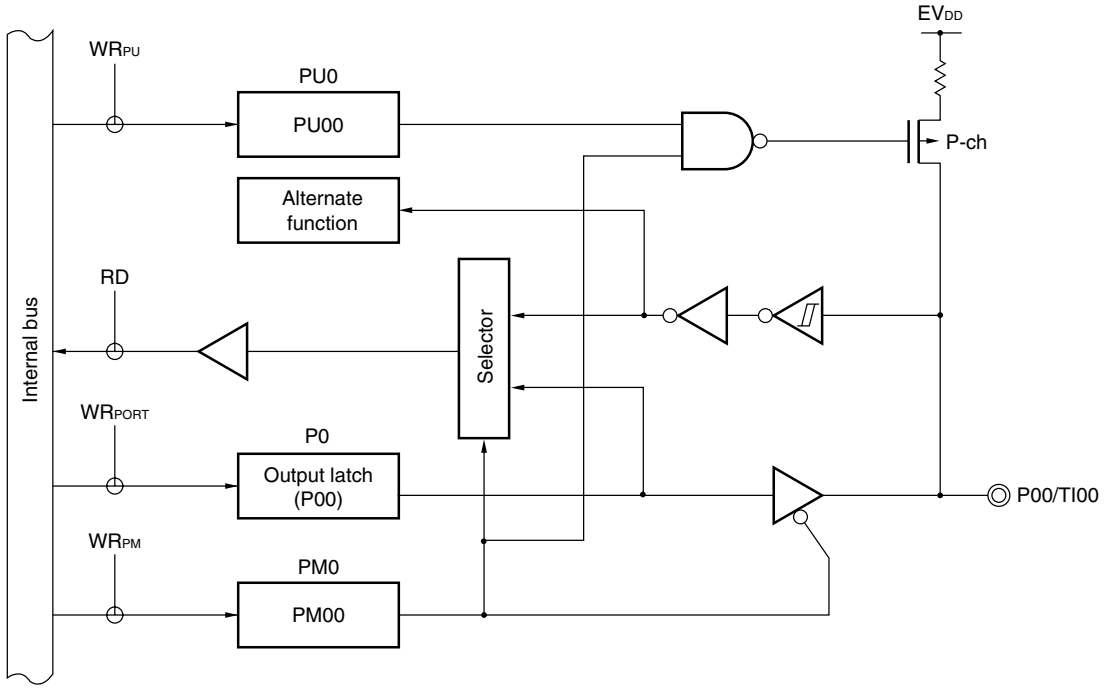

P0: Port register 0
PU0: Pull-up resistor option register 0
PM0: Port mode register 0
RD: Read signal
WRxx: Write signal

Remark With products not provided with an EV_{DD} or EV_{SS} pin, replace EV_{DD} with V_{DD}, or replace EV_{SS} with V_{SS}.

Figure 4-2. Block Diagram of P01

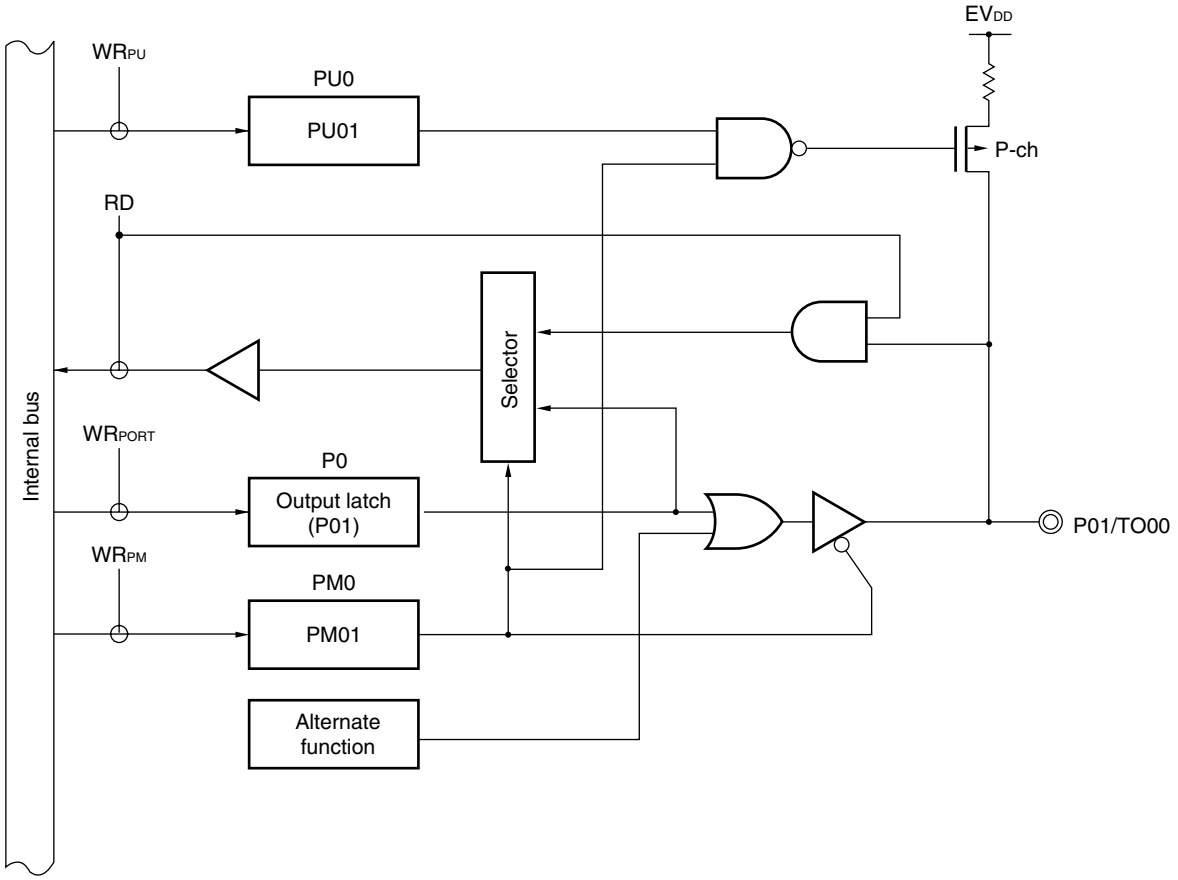

P0: Port register 0

PU0: Pull-up resistor option register 0

PM0: Port mode register 0

RD: Read signal

WRxx: Write signal

Remark With products not provided with an EV_{DD} or EV_{SS} pin, replace EV_{DD} with V_{DD}, or replace EV_{SS} with V_{SS}.

4.2.2 Port 1

	78K0R/IB3	78K0R/IC3			78K0R/ID3	78K0R/IE3
		(38-pin)	(44-pin)	(48-pin)		
P10/TI02/TO02/TxD0	√	P10/TI02/TO02 Note 1	P10/TI02/TO02 Note 1	P10/TI02/TO02 Note 1	P10/TI02/TO02 Note 1	P10/TI02/TO02 Note 1
P11/TI03/TO03/RxD0	√	P11/TI03/TO03 Note 1	P11/TI03/TO03 Note 1	P11/TI03/TO03 Note 1	P11/TI03/TO03 Note 1	P11/TI03/TO03 Note 1
P12/TI04/TO04	√	√	√	√	√	√
P13/TI05/TO05	√	√	√	√	√	√
P14/TI06/TO06	– Note 2	– Note 2	– Note 2	– Note 2	– Note 2	√
P15/TI07/TO07	– Note 2	– Note 2	– Note 2	– Note 2	– Note 2	√
P16/TI08/TO08	–	–	–	–	–	√
P17/TI09/TO09	– Note 3	– Note 3	– Note 3	– Note 3	– Note 3	√

Port 1 is a I/O port with an output latch. Port 1 can be set to the input mode or output mode in 1-bit units using port mode register 1 (PM1). When the P10 to P17 pins are used as an input port, use of an on-chip pull-up resistor can be specified in 1-bit units by pull-up resistor option register 1 (PU1).

This port can also be used for timer I/O and serial interface data I/O.

Reset signal generation sets port 1 to input mode.

Figure 4-3 shows a block diagram of port 1.

Notes 1. In the 38-pin products of the 78K0R/IC3, TxD0 and RxD0 are shared with P73 and P72, respectively. In the 44-pin products of the 78K0R/IC3 and in the 78K0R/ID3 and 78K0R/IE3, TxD0 and RxD0 are shared with P73 and P74, respectively.

2. TI06/TO06 and TI07/TO07 are shared with P50 and P51, respectively, in products other than the 78K0R/IE3.

3. TI09 is shared with P31, in products other than the 78K0R/IE3.

Cautions 1. To use P10/TI02/TO02(P10/TI02/TO02/TxD0), P11/TI03/TO03(P11/TI03/TO03/RxD0), P12/TI04/TO04, P13/TI05/TO05, P14/TI06/TO06, P15/TI07/TO07, P16/TI08/TO08, or P17/TI09/TO09 as a general-purpose port, set bits 2 to 9 (TO02 to TO09) of timer output register 0 (TO0) and bits 2 to 9 (TOE02 to TOE09) of timer output enable register 0 (TOE0) to "0", which is the same as their default status setting.

2. To use the crest interrupt signal (INTTMM1) and valley interrupt signal (INTTMV1) of the inverter control function, output from timer channel 4 must be enabled (by setting TOE04 to 1).

Therefore, P12/TI04/TO04 cannot be used as a general-purpose output port.

3. To use P10/TI02/TO2/TxD0 and P11/TI03/TO03/RxD0 of the 78K0R/IB3 as a general-purpose port, note the serial array unit setting. For details, refer to the following tables.

- **Table 13-5 Relationship Between Register Settings and Pins (Channel 0: UART0 Transmission)**
- **Table 13-8 Relationship Between Register Settings and Pins (Channel 1: UART0 Reception).**

Figure 4-3. Block Diagram of P10 to P17

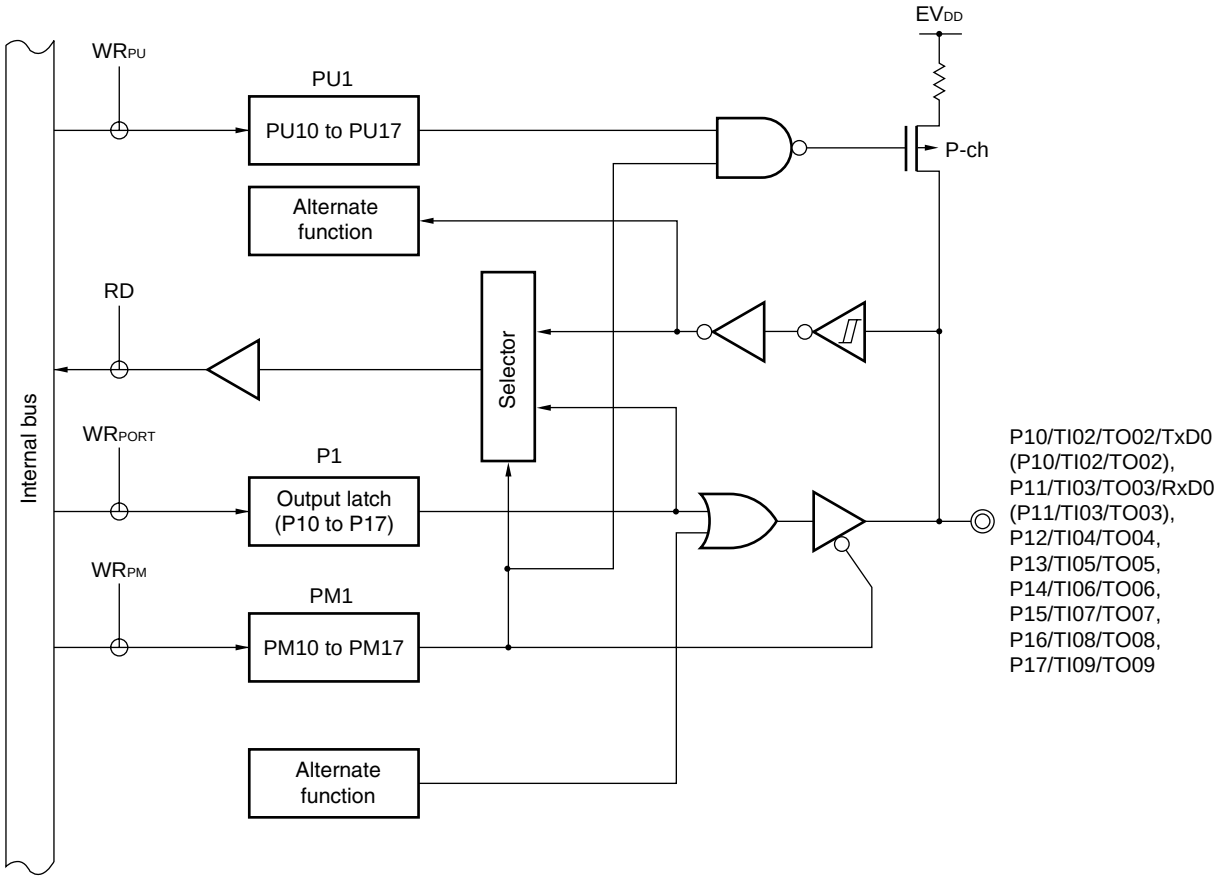

P1: Port register 1

PU1: Pull-up resistor option register 1

PM1: Port mode register 1

RD: Read signal

WR××: Write signal

Remark With products not provided with an EV_{DD} or EV_{SS} pin, replace EV_{DD} with V_{DD}, or replace EV_{SS} with V_{SS}.

4.2.3 Port 2

	78K0R/IB3	78K0R/IC3			78K0R/ID3	78K0R/IE3
		(38-pin)	(44-pin)	(48-pin)		
P20/ANI0	√	√	√	√	√	√
P21/ANI1	√	√	√	√	√	√
P22/ANI2	√	√	√	√	√	√
P23/ANI3	√	√	√	√	√	√
P24/ANI4	√	√	√	√	√	√
P25/ANI5	√	√	√	√	√	√
P26/ANI6	–	√	√	√	√	√
P27/ANI7	–	√	√	√	√	√

Port 2 is a I/O port with an output latch. Port 2 can be set to the input mode or output mode in 1-bit units using port mode register 2 (PM2).

This port can also be used for A/D converter analog input.

To use P20/ANI0 to P27/ANI7 as digital input pins, set them in the digital I/O mode by using the A/D port configuration register (ADPC) and in the input mode by using PM2. Use these pins starting from the lower bit.

To use P20/ANI0 to P27/ANI7 as digital output pins, set them in the digital I/O mode by using ADPC and in the output mode by using PM2.

To use P20/ANI0 to P27/ANI7 as analog input pins, set them in the analog input mode by using the A/D port configuration register (ADPC) and in the input mode by using PM2. Use these pins starting from the upper bit.

Table 4-7. Setting Functions of P20/ANI0 to P27/ANI7 Pins

ADPC	PM2	ADS	P20/ANI0 to P27/ANI7 Pins
Digital I/O selection	Input mode	–	Digital input
	Output mode	–	Digital output
Analog input selection	Input mode	Selects ANI.	Analog input (to be converted)
		Does not select ANI.	Analog input (not to be converted)
	Output mode	Selects ANI.	Setting prohibited
		Does not select ANI.	

All P20/ANI0 to P27/ANI7 are set in the digital input mode when the reset signal is generated.

Figure 4-4 shows a block diagram of port 2.

Caution Make the AV_{REF} pin the same potential as the V_{DD} and EV_{DD} pins when port 2 is used as a digital port.

Figure 4-4. Block Diagram of P20 to P27

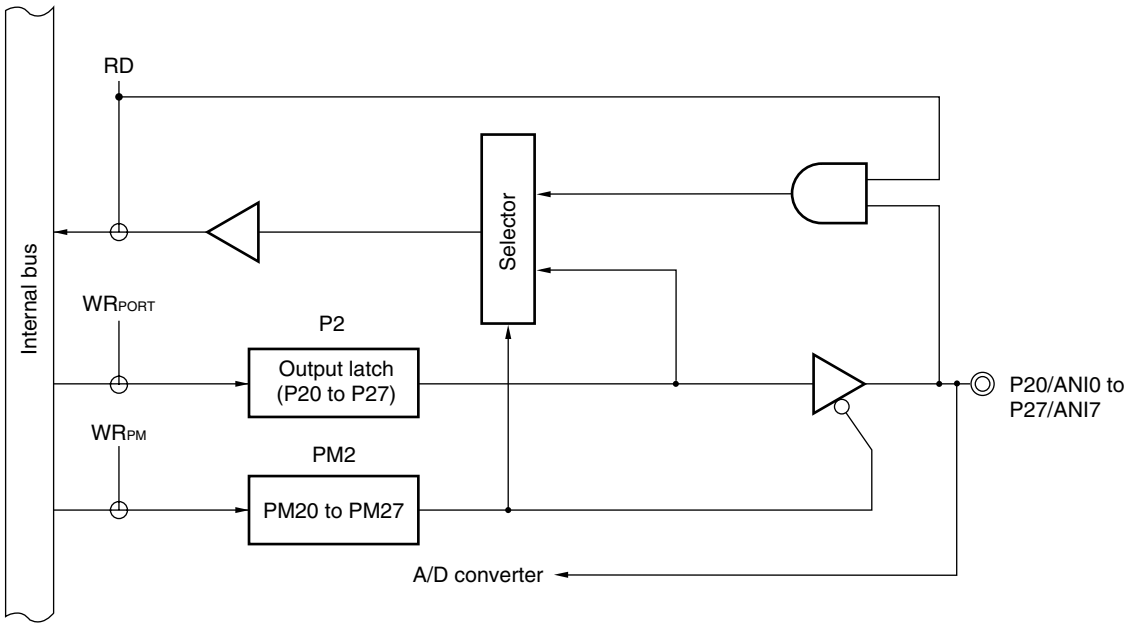

P2: Port register 2

PM2: Port mode register 2

RD: Read signal

WR××: Write signal

4.2.4 Port 3

	78K0R/IB3	78K0R/IC3			78K0R/ID3	78K0R/IE3
		(38-pin)	(44-pin)	(48-pin)		
P30/SO10/TxD1/TO11	√	√	√	√	√	√
P31/SI10/RxD1/SDA10/INTP1/TI09	√	√	√	√	√	P31/SI10/RxD1/SDA10/INTP1 Note
P32/$\overline{\text{SCK10}}$/SCL10/INTP2	√	√	√	√	√	√
P33	–	–	–	–	–	√

Port 3 is I/O port with an output latch. Port 3 can be set to the input mode or output mode in 1-bit units using port mode register 3 (PM3). When the P30 to P33 pins are used as an input port, use of an on-chip pull-up resistor can be specified in 1-bit units by pull-up resistor option register 3 (PU3).

Input to the P31 and P32 pins can be specified through a normal input buffer or a TTL input buffer in 1-bit units using port input mode register 3 (PIM3).

Output from the P30 to P32 pins can be specified as N-ch open-drain output (V_{DD} tolerance) in 1-bit units using port output mode register 3 (POM3).

This port can also be used for serial interface data I/O, clock I/O, external interrupt request input, and timer I/O.

Reset signal generation sets port 3 to input mode.

Figures 4-5 to 4-7 show block diagrams of port 3.

Note TI09 is shared with P17, in the 78K0R/IE3.

Cautions 1. To use P30/SO10/TxD1/TO11 as a general-purpose port, set bit 1 (TO11) of timer output register 1 (TO1) and bit 1 (TOE11) of timer output enable register 1 (TOE1) to "0", which is the same as their default status setting.

2. To use P30/SO10/TxD1/TO11, P31/SI10/RxD1/SDA10/INTP1/TI09, (P31/SI10/RxD1/SDA10/INTP1, in case of 78K0R/IE3), P32/$\overline{\text{SCK10}}$/SCL10/INTP2 as a general-purpose port, note the serial array unit setting. For details, refer to the following tables.

- **Table 13-11 Relationship Between Register Settings and Pins (Channel 2: CSI10, UART1 Transmission, IIC10)**
- **Table 13-12 Relationship Between Register Settings and Pins (Channel 3: UART1 Reception).**

Figure 4-5. Block Diagram of P30

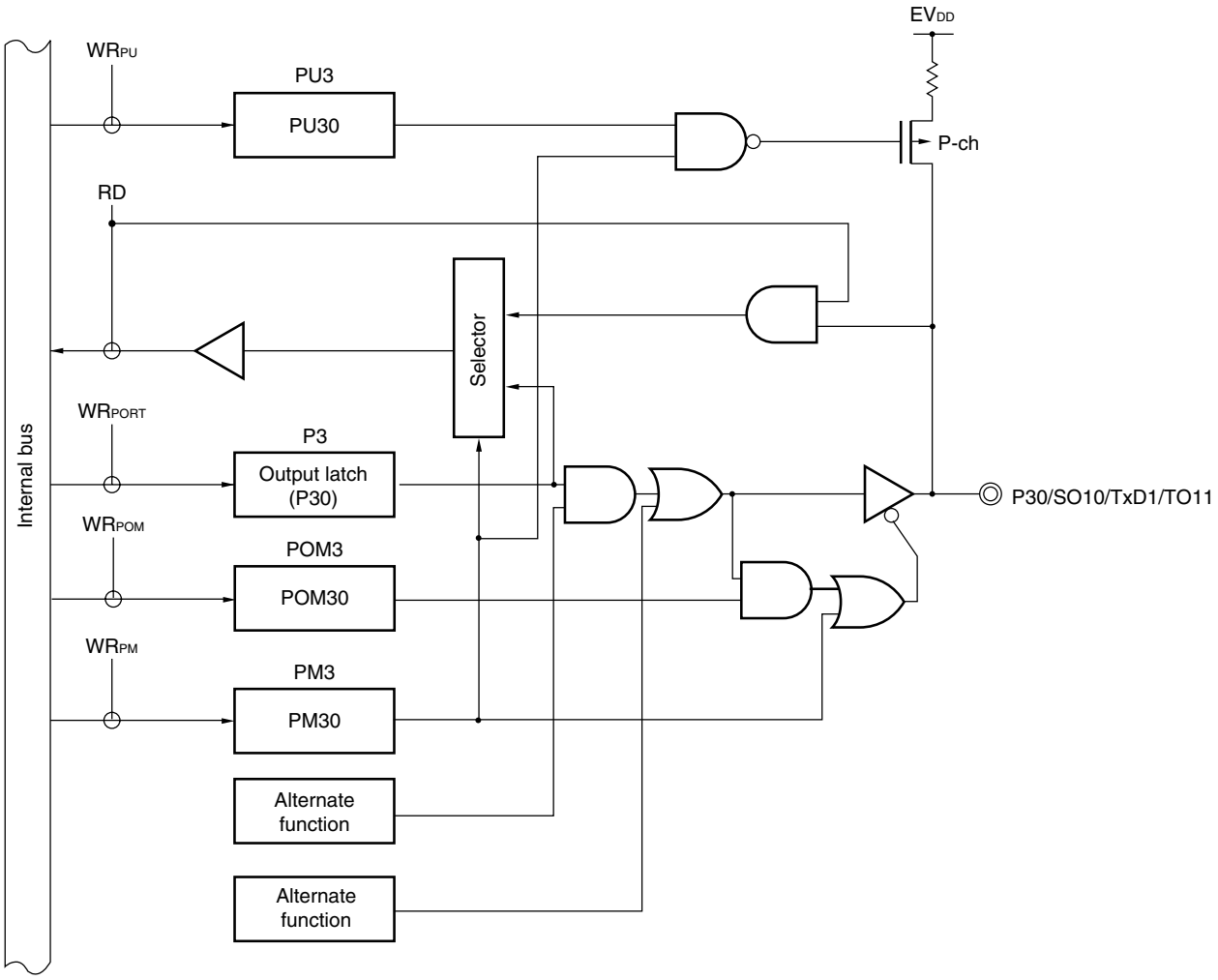

P3: Port register 3

PU3: Pull-up resistor option register 3

POM3: Port output mode register 3

PM3: Port mode register 3

RD: Read signal

WR××: Write signal

Remark With products not provided with an EV_{DD} or EV_{SS} pin, replace EV_{DD} with V_{DD}, or replace EV_{SS} with V_{SS}.

Figure 4-6. Block Diagram of P31 and P32

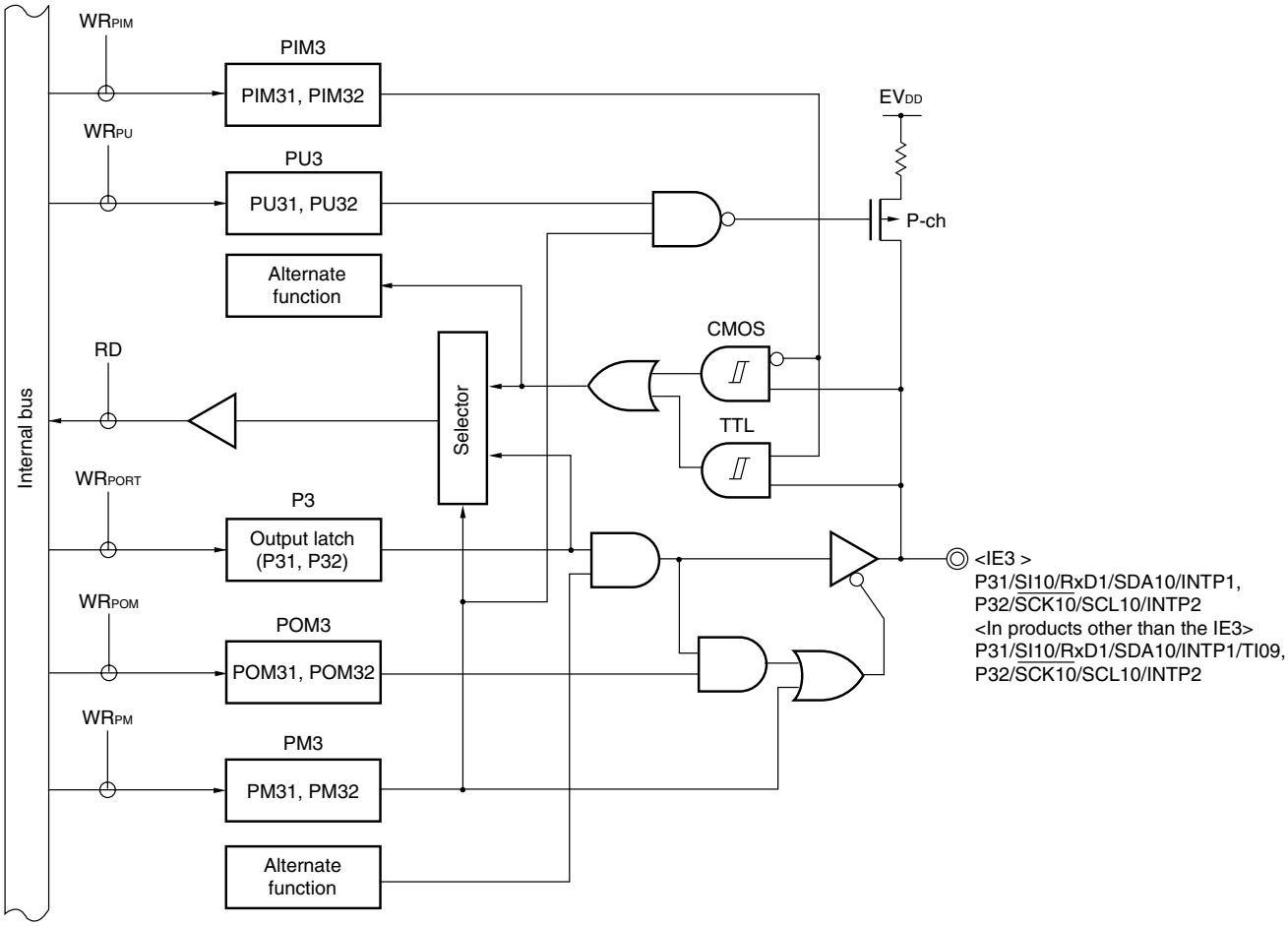

P3: Port register 3
PU3: Pull-up resistor option register 3
PIM3: Port input mode register 3
POM3: Port output mode register 3
PM3: Port mode register 3
RD: Read signal
WR××: Write signal

Remark With products not provided with an EV_{DD} or EV_{SS} pin, replace EV_{DD} with V_{DD}, or replace EV_{SS} with V_{SS}.

Figure 4-7. Block Diagram of P33

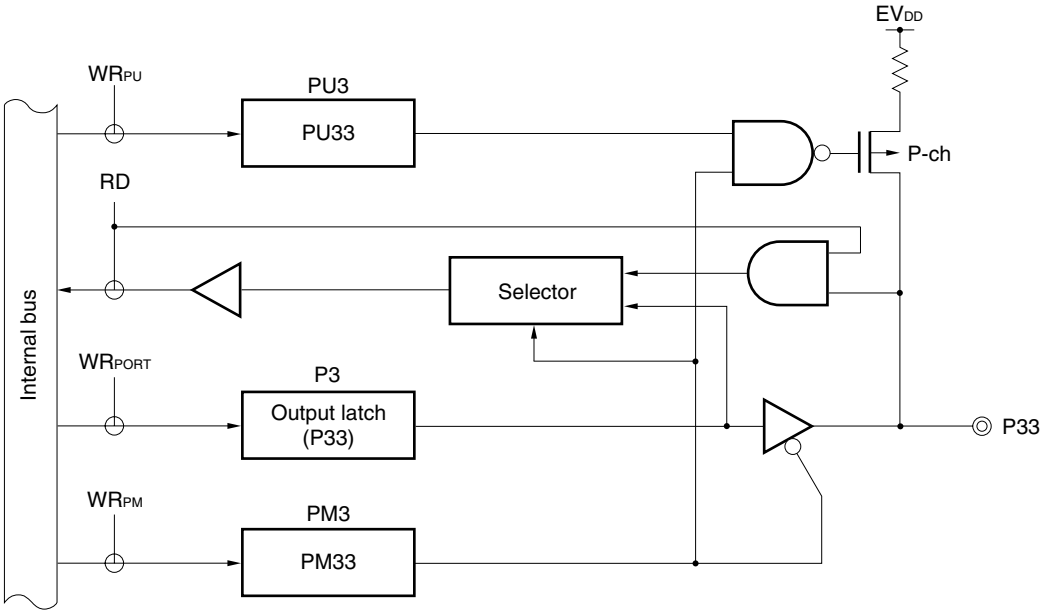

P3: Port register 3

PU3: Pull-up resistor option register 3

PM3: Port mode register 3

RD: Read signal

WR××: Write signal

4.2.5 Port 4

	78K0R/IB3	78K0R/IC3			78K0R/ID3	78K0R/IE3
		(38-pin)	(44-pin)	(48-pin)		
P40/TOOL0	√	√	√	√	√	√
P41/TOOL1	√	√	√	√	√	√
P42	–	–	–	–	–	√
P43	–	–	–	–	–	√

Port 4 is I/O port with an output latch. Port 4 can be set to the input mode or output mode in 1-bit units using port mode register 4 (PM4). When the P40 to P43 pins are used as an input port, use of an on-chip pull-up resistor can be specified in 1-bit units by pull-up resistor option register 4 (PU4)[Note].

This port can also be used for flash memory programmer/debugger data I/O and clock output.

Reset signal generation sets port 4 to input mode.

Figures 4-8 and 4-9 show the block diagrams of port 4.

Note When a tool is connected, the P40 and P41 pins cannot be connected to a pull-up resistor.

Caution When a tool is connected, the P40 pin cannot be used as a port pin.
When the on-chip debug function is used, P41 pin can be used as follows by the mode setting on the debugger.

1-line mode: can be used as a port (P41).
2-line mode: used as a TOOL1 pin and cannot be used as a port (P41).

Figure 4-8. Block Diagram of P40 and P41

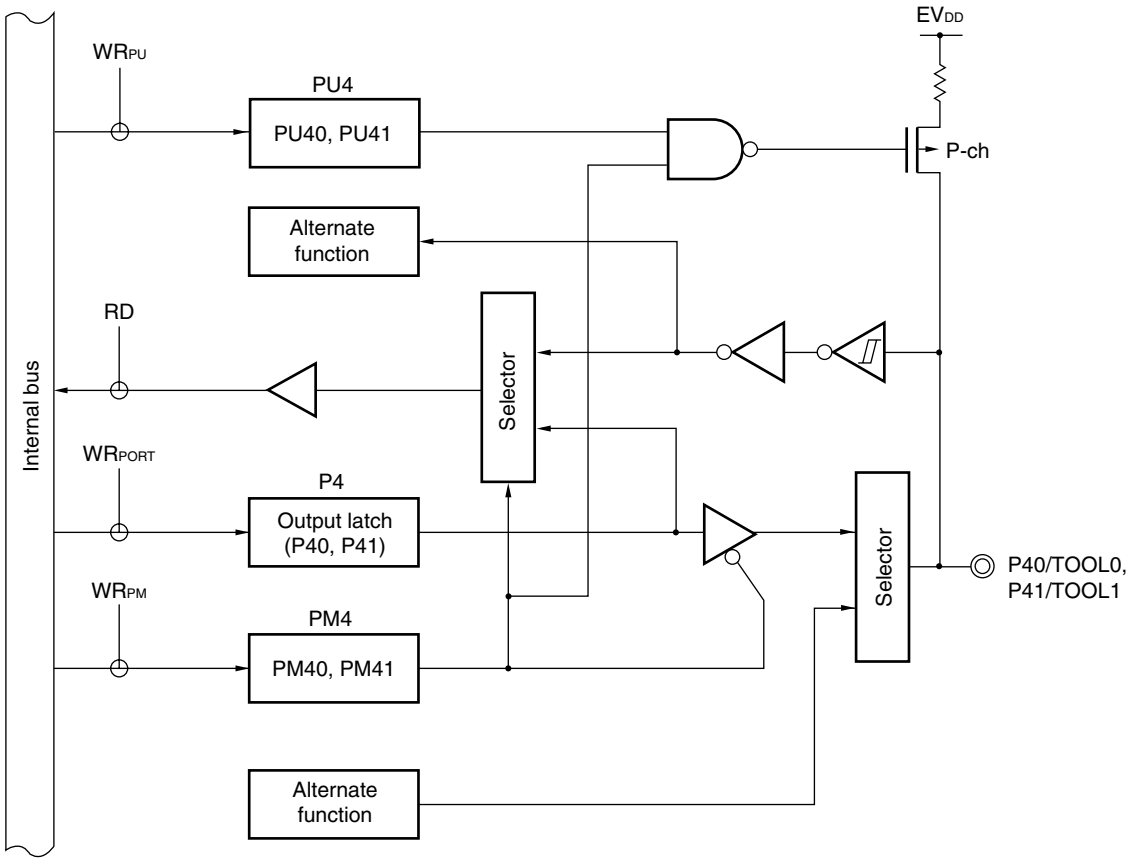

P4: Port register 4

PU4: Pull-up resistor option register 4

PM4: Port mode register 4

RD: Read signal

WR××: Write signal

Remark With products not provided with an EV_{DD} or EV_{SS} pin, replace EV_{DD} with V_{DD}, or replace EV_{SS} with V_{SS}.

Figure 4-9. Block Diagram of P42 and P43

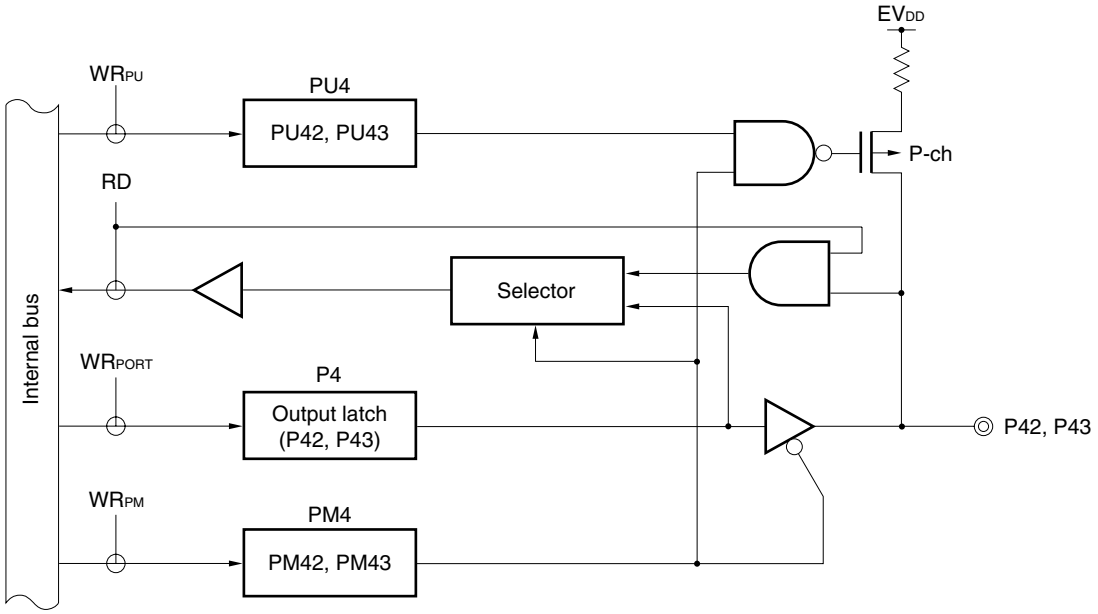

P4: Port register 4

PU4: Pull-up resistor option register 4

PM4: Port mode register 4

RD: Read signal

WR××: Write signal

4.2.6 Port 5

	78K0R/IB3	78K0R/IC3			78K0R/ID3	78K0R/IE3
		(38-pin)	(44-pin)	(48-pin)		
P50/TI06/TO06	√	√	√	√	√	P50 Note
P51/TI07/TO07	√	√	√	√	√	P51 Note
P52/SLTI/SLTO	–	√	√	√	√	√
P53	–	–	–	–	–	√

Port 5 is a 4-bit I/O port with an output latch. Port 5 can be set to the input mode or output mode in 1-bit units using port mode register 5 (PM5). When the P50 to P53 pins are used as an input port, use of an on-chip pull-up resistor can be specified in 1-bit units by pull-up resistor option register 5 (PU5).

This port can also be used for timer I/O.

Reset signal generation sets port 5 to input mode.

Figures 4-10 to 4-12 show a block diagrams of port 5.

Note TI06/TO06 and TI07/TO07 are shared with P14 and P15, in products the 78K0R/IE3.

Cautions 1. To use P50/TI06/TO06 and P51/TI07/TO07 as a general-purpose port, set bits 6 and 7 (TO06 and TO07) of timer output register 0 (TO0) and bits 6 and 7 (TOE06 and TOE07) of timer output enable register 0 (TOE0) to “0”, which is the same as their default status setting.

2. To use P52/SLTI/SLTO as a general-purpose port, check which timer I/O pin of which channel n is selected in the input switching control register (ISC) setting (For details about the ISC register, see 6.3 (24) Input switch control register (ISC). Also, set bit n (TOn) of timer output register 0 (TO0) and bit n (TOEn) of timer output enable register 0 (TOE0) to “0”, which is the same setting as in the initial state of each.

Remark n = 00, 01, 08 to 11

Figure 4-10. Block Diagram of P50, P51

(1) 78K0R/IE3

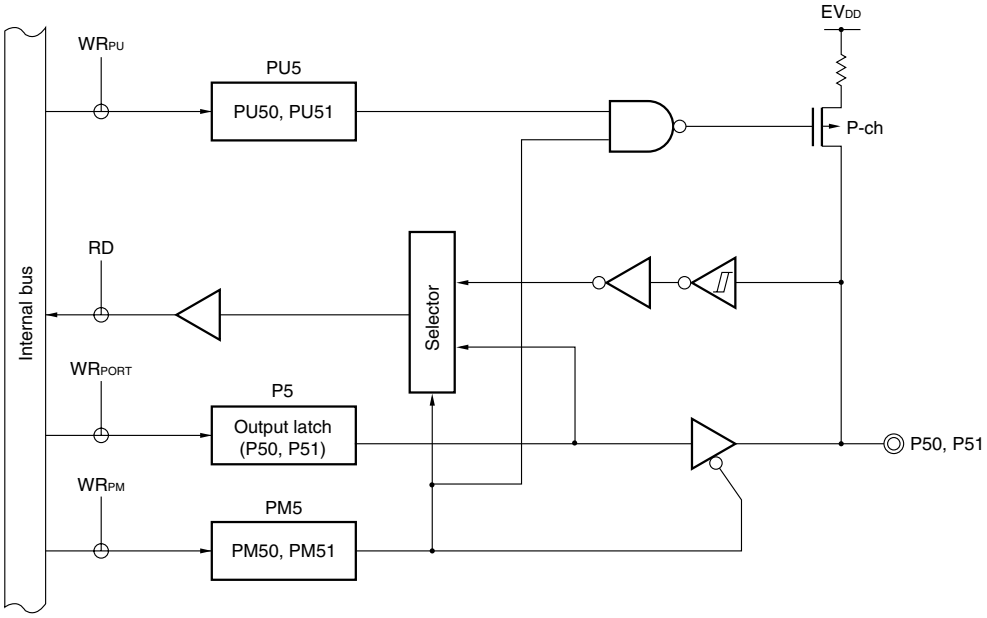

(2) In products other than 78K0R/IE3

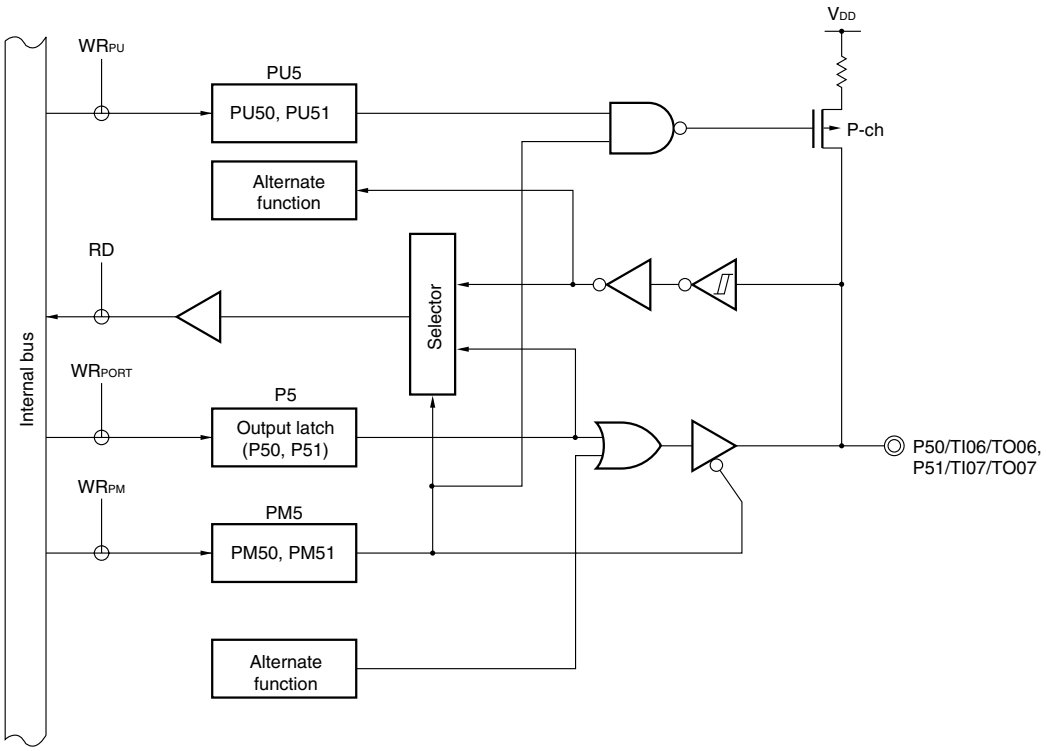

P5: Port register 5

PU5: Pull-up resistor option register 5

PM5: Port mode register 5

RD: Read signal

WR××: Write signal

Figure 4-11. Block Diagram of P52

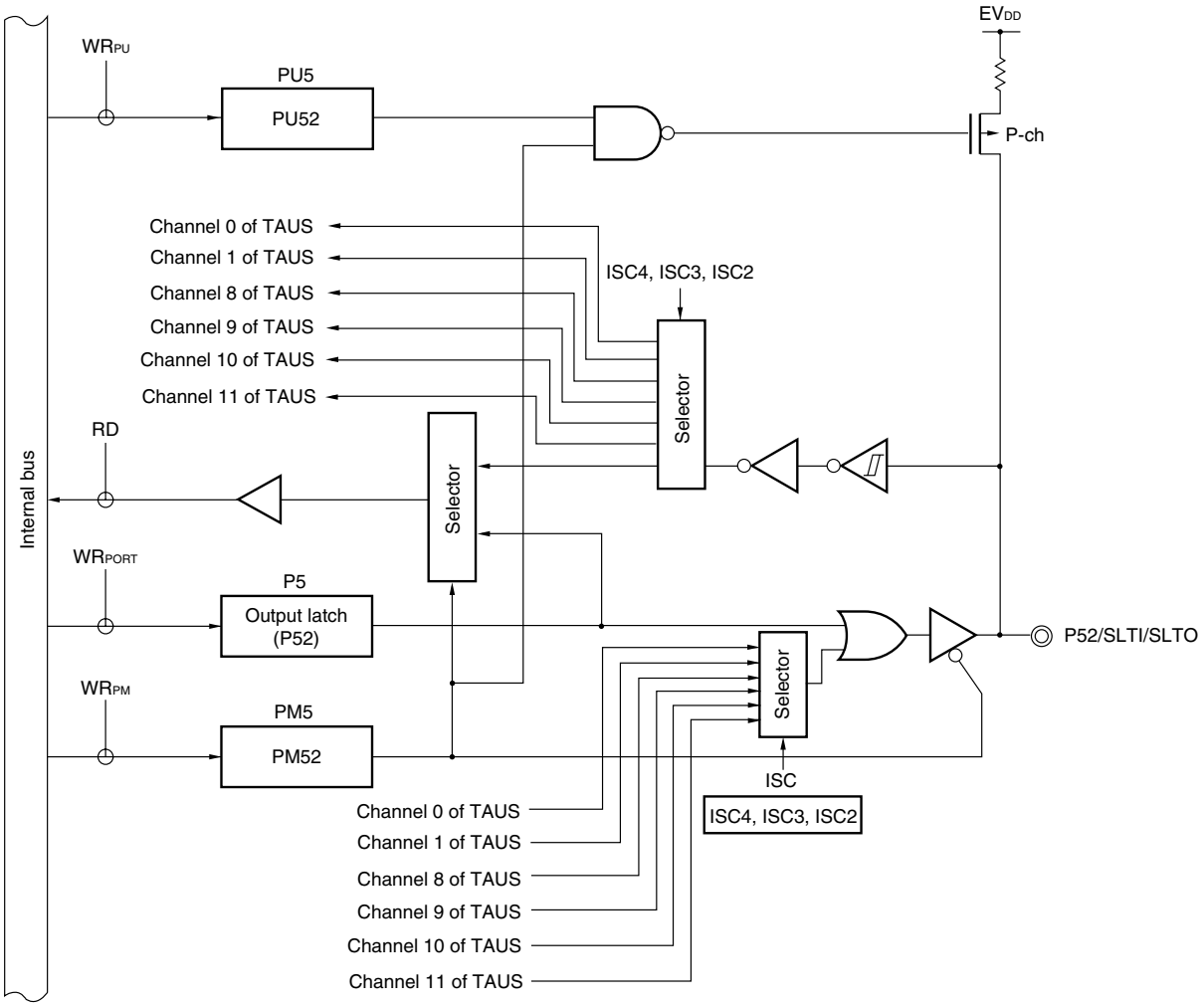

P5: Port register 5

PU5: Pull-up resistor option register 5

PM5: Port mode register 5

RD: Read signal

WR××: Write signal

ISC: Input switch control register

Remark With products not provided with an EV_{DD} or EV_{SS} pin, replace EV_{DD} with V_{DD}, or replace EV_{SS} with V_{SS}.

Figure 4-12. Block Diagram of P53

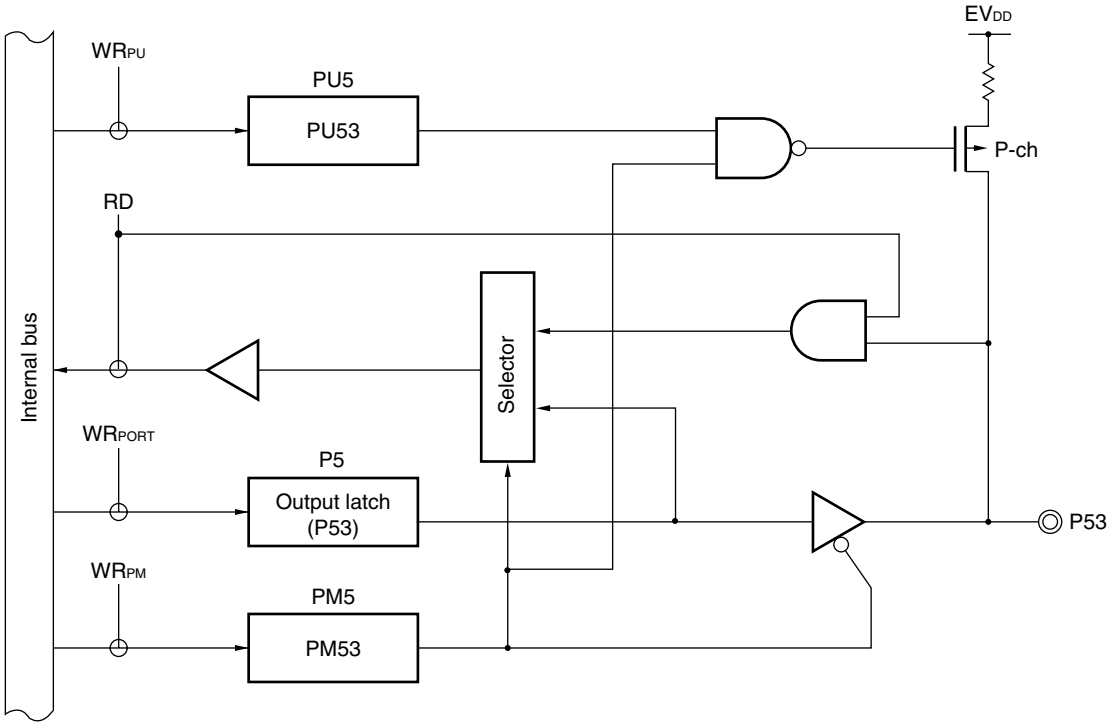

P5: Port register 5

PU5: Pull-up resistor option register 5

PM5: Port mode register 5

RD: Read signal

WR××: Write signal

4.2.7 Port 6

	78K0R/IB3	78K0R/IC3			78K0R/ID3	78K0R/IE3
		(38-pin)	(44-pin)	(48-pin)		
P60/SCL0	–	–	–	√	√	√
P61/SDA0	–	–	–	√	√	√

Port 6 is an I/O port with an output latch. Port 6 can be set to the input mode or output mode in 1-bit units using port mode register 6 (PM6).

The output of the P60 and P61 pins is N-ch open-drain output (6 V tolerance).

This port can also be used for serial interface data I/O and clock I/O.

Reset signal generation sets port 6 to input mode.

Figure 4-13 shows block diagram of port 6.

Caution When using P60/SCL0 or P61/SDA0 as a general-purpose port, stop the operation of serial interface IICA.

Figure 4-13. Block Diagram of P60 and P61

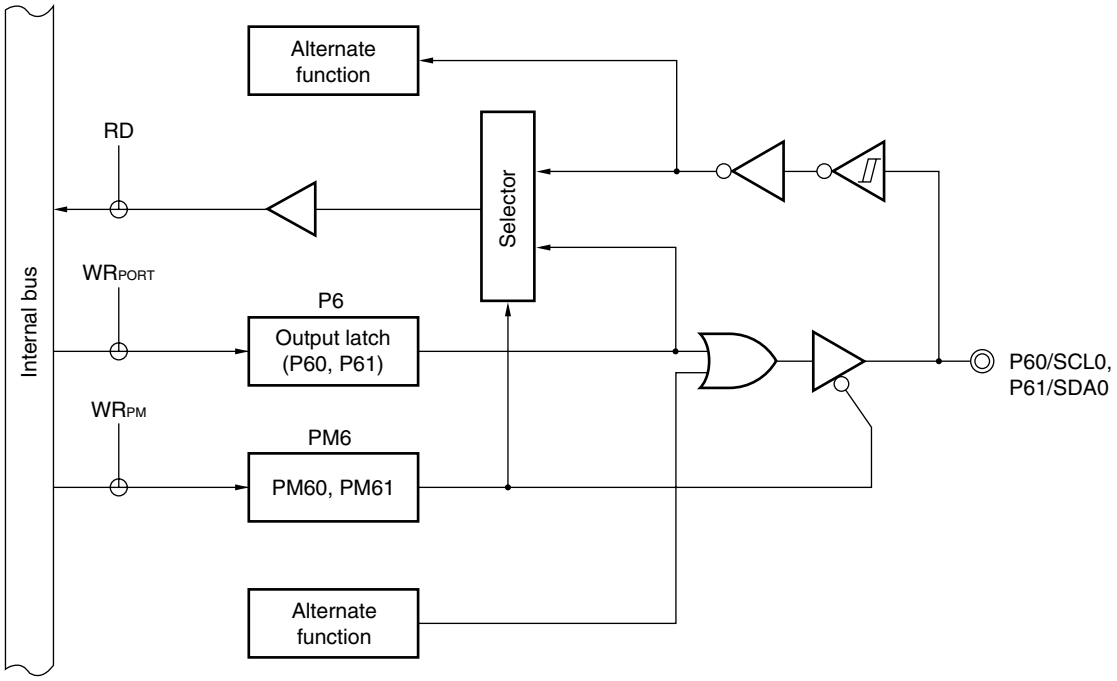

P6: Port register 6

PM6: Port mode register 6

RD: Read signal

WR××: Write signal

4.2.8 Port 7

	78K0R/IB3	78K0R/IC3			78K0R/ID3	78K0R/IE3
		(38-pin)	(44-pin)	(48-pin)		
P70/SO01/INTP4	– Note 1	– Note 1	√	√	√	√
P71/SI01/INTP5	– Note 1	– Note 1	√	√	√	√
P72/$\overline{\text{SCK01}}$/INTP6	–	P72/INTP6/RxD0	√	√	√	√
P73/SO00/TxD0/TO10	– Note 2	P73/TxD0/TO10	√	√	√	√
P74/SI00/RxD0/TI10	– Note 2	– Note 3	√	√	√	√
P75/$\overline{\text{SCK00}}$/TI11	–	–	√	√	√	√
P76	–	–	–	–	–	√
P77	–	–	–	–	–	√

Port 7 is I/O port with an output latch. Port 7 can be set to the input mode or output mode in 1-bit units using port mode register 7 (PM7). When the P70 and P77 pins are used as an input port, use of an on-chip pull-up resistor can be specified in 1-bit units by pull-up resistor option register 7 (PU7).

Input to the P71, P72, P74, and P75 pins can be specified through a normal input buffer or a TTL input buffer in 1-bit units using port input mode register 7 (PIM7).

Output from the P70, P72, P73, and P75 pins can be specified as N-ch open-drain output (V_{DD} tolerance) in 1-bit units using port output mode register 7 (POM7).

This port can also be used for serial interface data I/O, clock I/O, external interrupt request input, and timer I/O.

Reset signal generation sets port 7 to input mode.

Figures 4-14 to 4-19 show block diagrams of port 7.

Notes 1. In the 38-pin products of the 78K0R/IB3 and in the 78K0R/IC3, INTP4 and INTP5 are shared with P121 and P122, respectively.

2. In the 78K0R/IB3, TxD0 and RxD0 are shared with P10 and P11, respectively.

3. In the 38-pin products of the 78K0R/IC3, RxD0 is shared with P72.

Cautions 1. To use P70/SO01/INTP4, P71/SI01/INTP5, P72/$\overline{\text{SCK01}}$/INTP6, P73/SO00/TxD0/TO10, P74/SI00/RxD0/TI10, P75/$\overline{\text{SCK00}}$/TI11 (38-pin products of 78K0R/IC3: P72/INTP6/RxD0, P73/TxD0/TO10) as a general-purpose port, note the serial array unit setting. For details, refer to the following tables.

In case of the 44-pin and 48-pin products of 78K0R/IC3, 78K0R/ID3, and 78K0R/IE3

- **Table 13-7 Relationship Between Register Settings and Pins (Channel 0: CSI00, UART0 Transmission)**
- **Table 13-10 Relationship Between Register Settings and Pins (Channel 1: CSI01, UART0 Reception).**

In case of the 78K0R/IB3

- **Table 13-6 Relationship Between Register Settings and Pins (Channel 0: UART0 Transmission)**
- **Table 13-9 Relationship Between Register Settings and Pins (Channel 1: UART0 Reception).**

2. To use P73/SO00/TxD0/TO10 (38-pin products of 78K0R/IC3: P73/TxD0/TO10) as a general-purpose port, set bit 10 (TO10) of timer output register 0 (TO0) and bit 10 (TOE10) of timer output enable register 0 (TOE0) to “0”, which is the same as their default status setting.

Figure 4-14. Block Diagram of P70

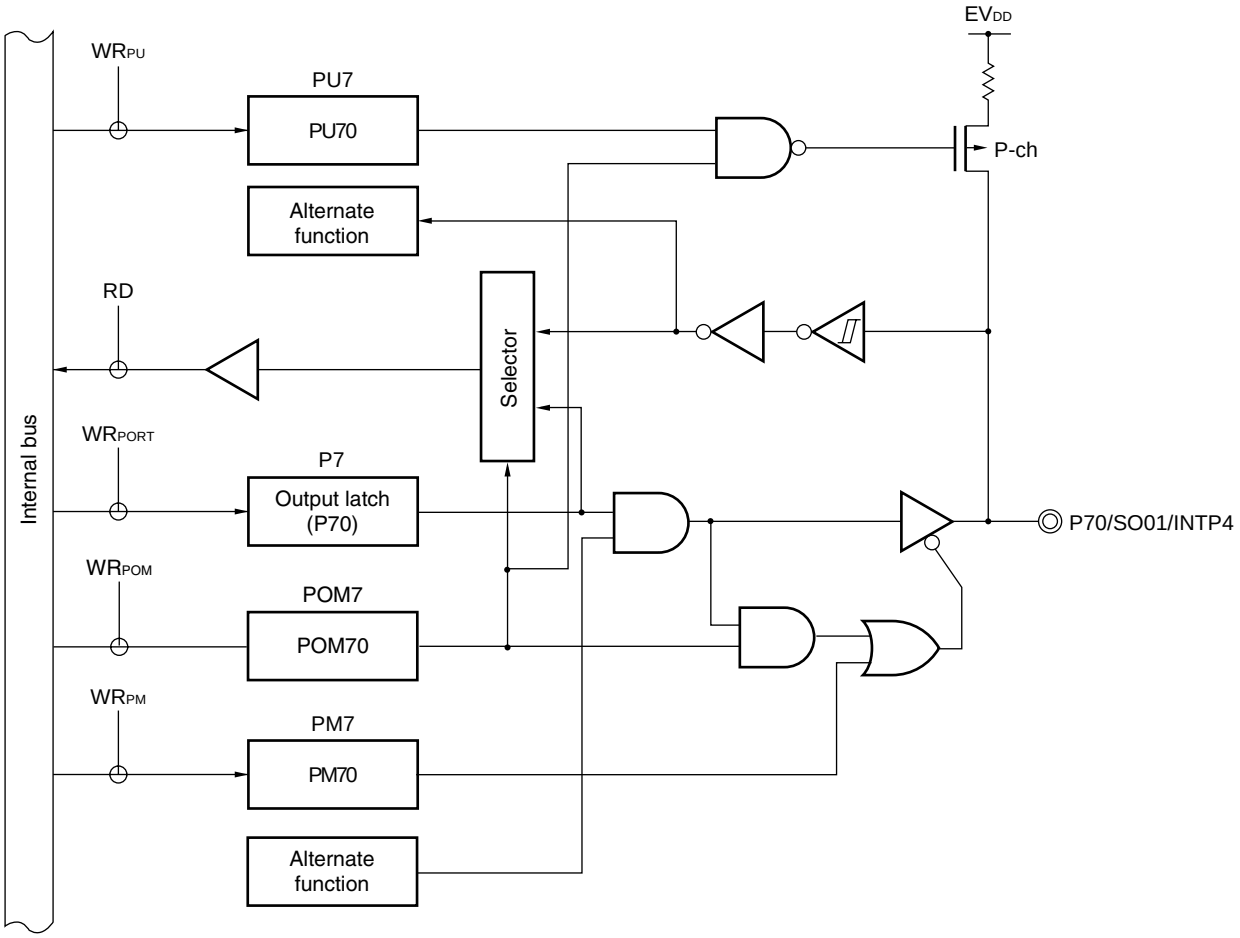

P7: Port register 7
PU7: Pull-up resistor option register 7
POM7: Port output mode register 7
PM7: Port mode register 7
RD: Read signal
WR××: Write signal

Remark With products not provided with an EV_{DD} or EV_{SS} pin, replace EV_{DD} with V_{DD}, or replace EV_{SS} with V_{SS}.

Figure 4-15. Block Diagram of P71 and P74

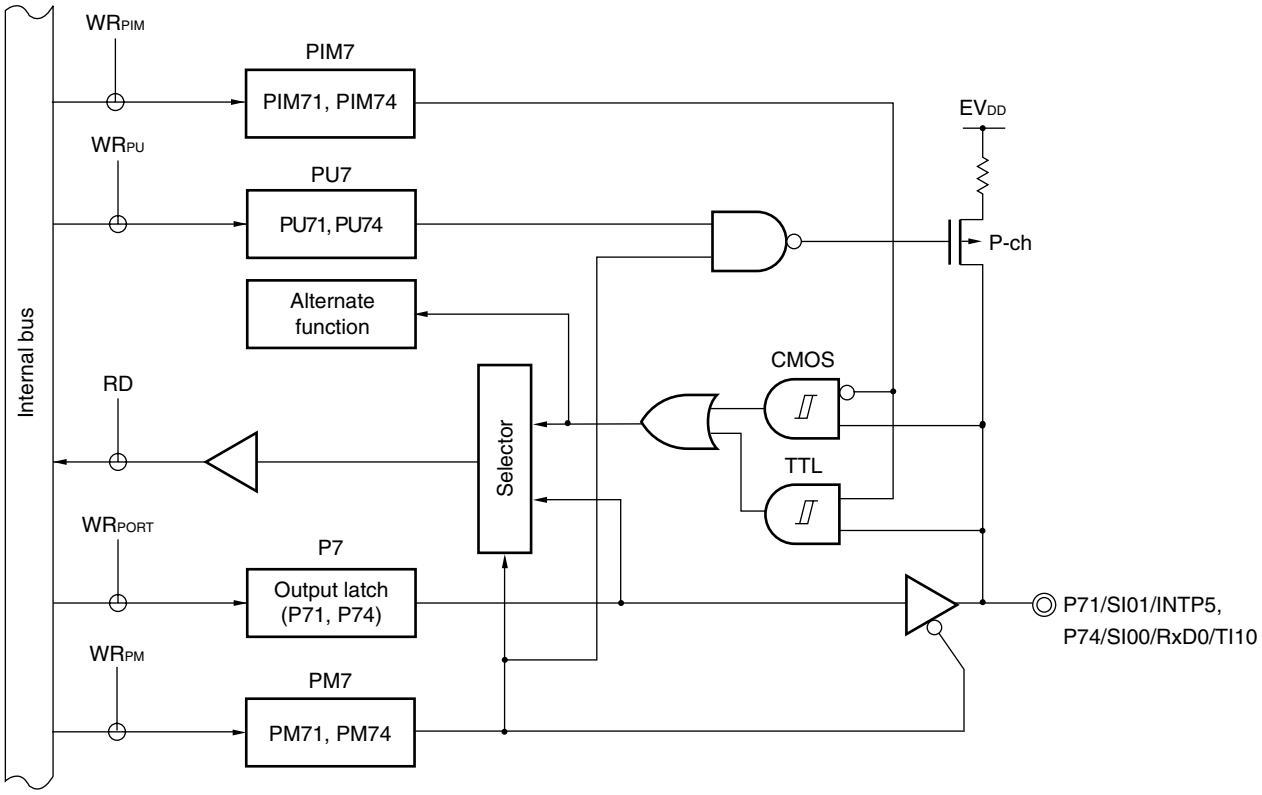

P7: Port register 7

PU7: Pull-up resistor option register 7

PM7: Port mode register 7

PIM7: Port input mode register 7

RD: Read signal

WR××: Write signal

Remark With products not provided with an EV_{DD} or EV_{SS} pin, replace EV_{DD} with V_{DD}, or replace EV_{SS} with V_{SS}.

Figure 4-16. Block Diagram of P72 (1/2)

(1) 38-pin products of 78K0R/IC3

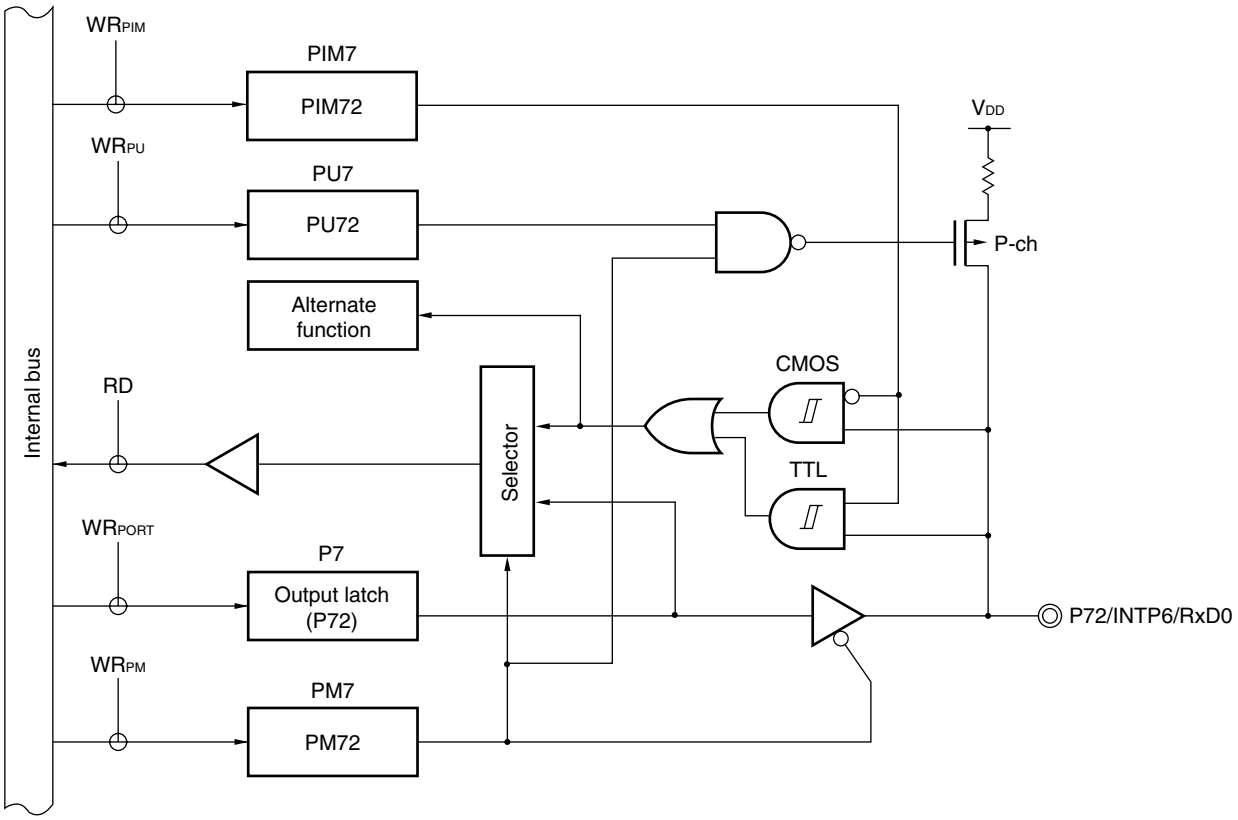

P7: Port register 7
PU7: Pull-up resistor option register 7
PM7: Port mode register 7
PIM7: Port input mode register 7
RD: Read signal
WR××: Write signal

Figure 4-16. Block Diagram of P72 (2/2)

(2) 44-pin and 48-pin products of 78K0R/IC3, 78K0R/ID3, 78K0R/IE3

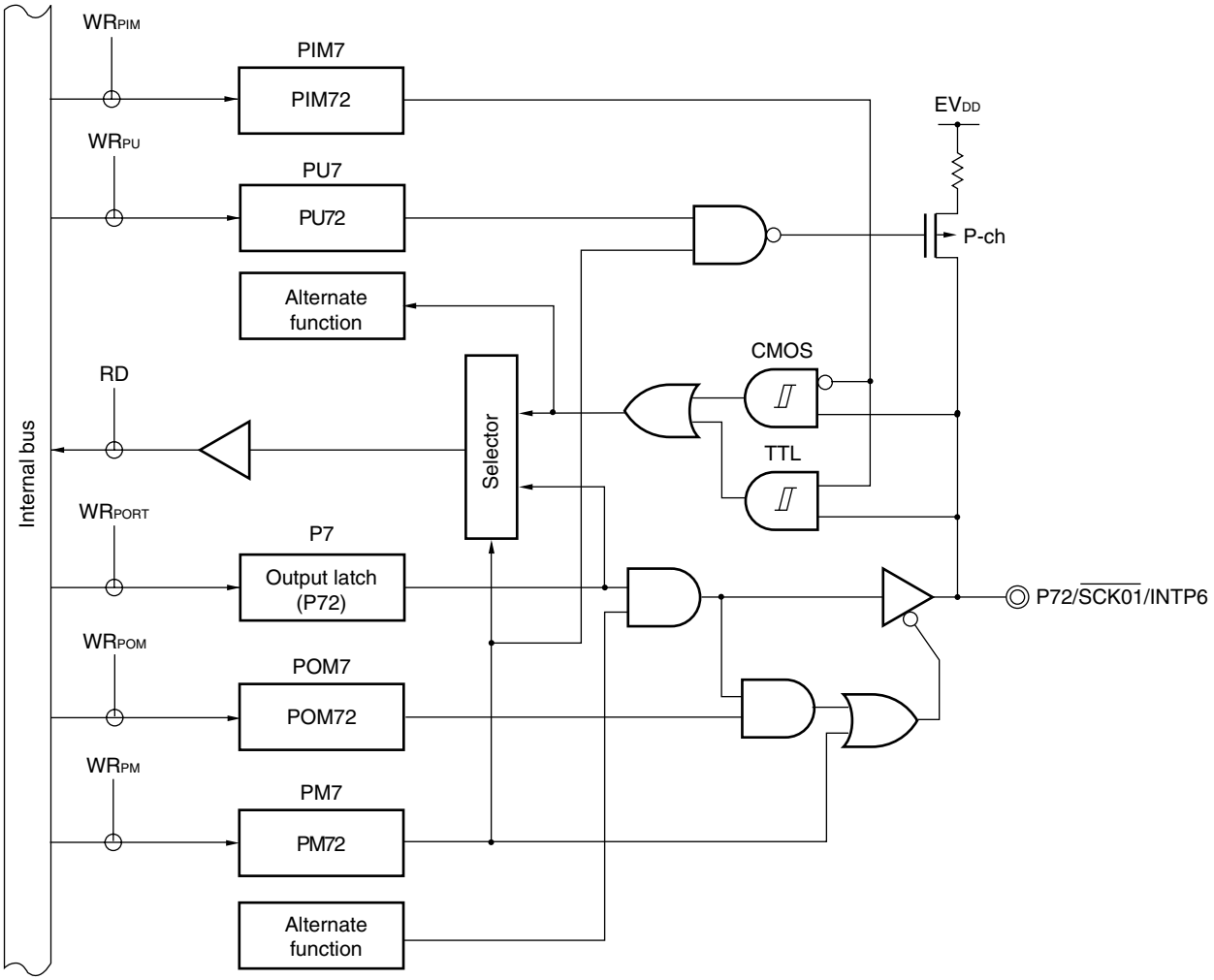

P7: Port register 7
PU7: Pull-up resistor option register 7
PM7: Port mode register 7
PIM7: Port input mode register 7
RD: Read signal
WR××: Write signal

Remark With products not provided with an EV_{DD} or EV_{SS} pin, replace EV_{DD} with V_{DD}, or replace EV_{SS} with V_{SS}.

Figure 4-17. Block Diagram of P73

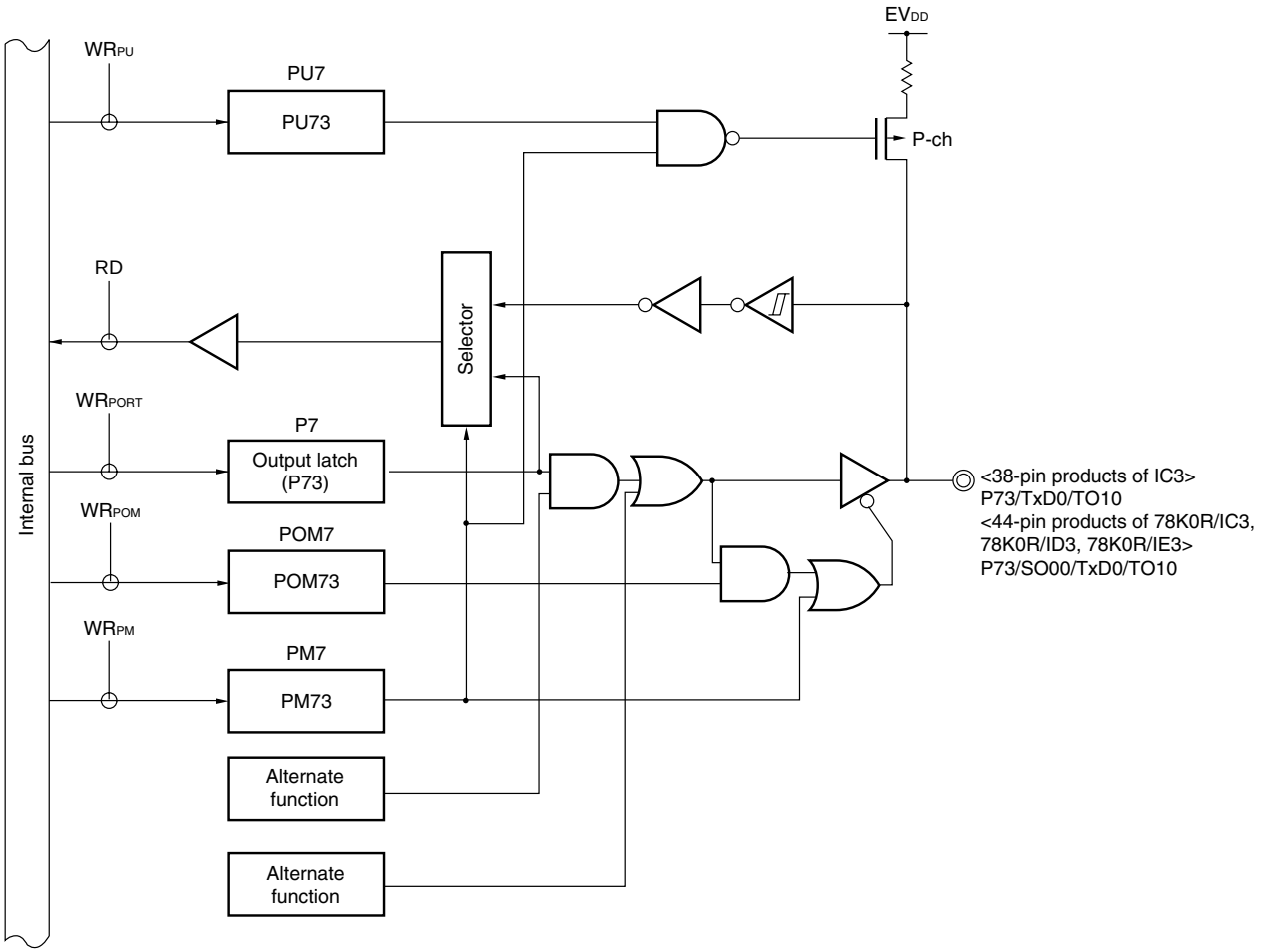

P7: Port register 7
PU7: Pull-up resistor option register 7
PM7: Port mode register 7
POM7: Port output mode register 7
RD: Read signal
WR××: Write signal

Remark With products not provided with an EV_{DD} or EV_{SS} pin, replace EV_{DD} with V_{DD}, or replace EV_{SS} with V_{SS}.

Figure 4-18. Block Diagram of P75

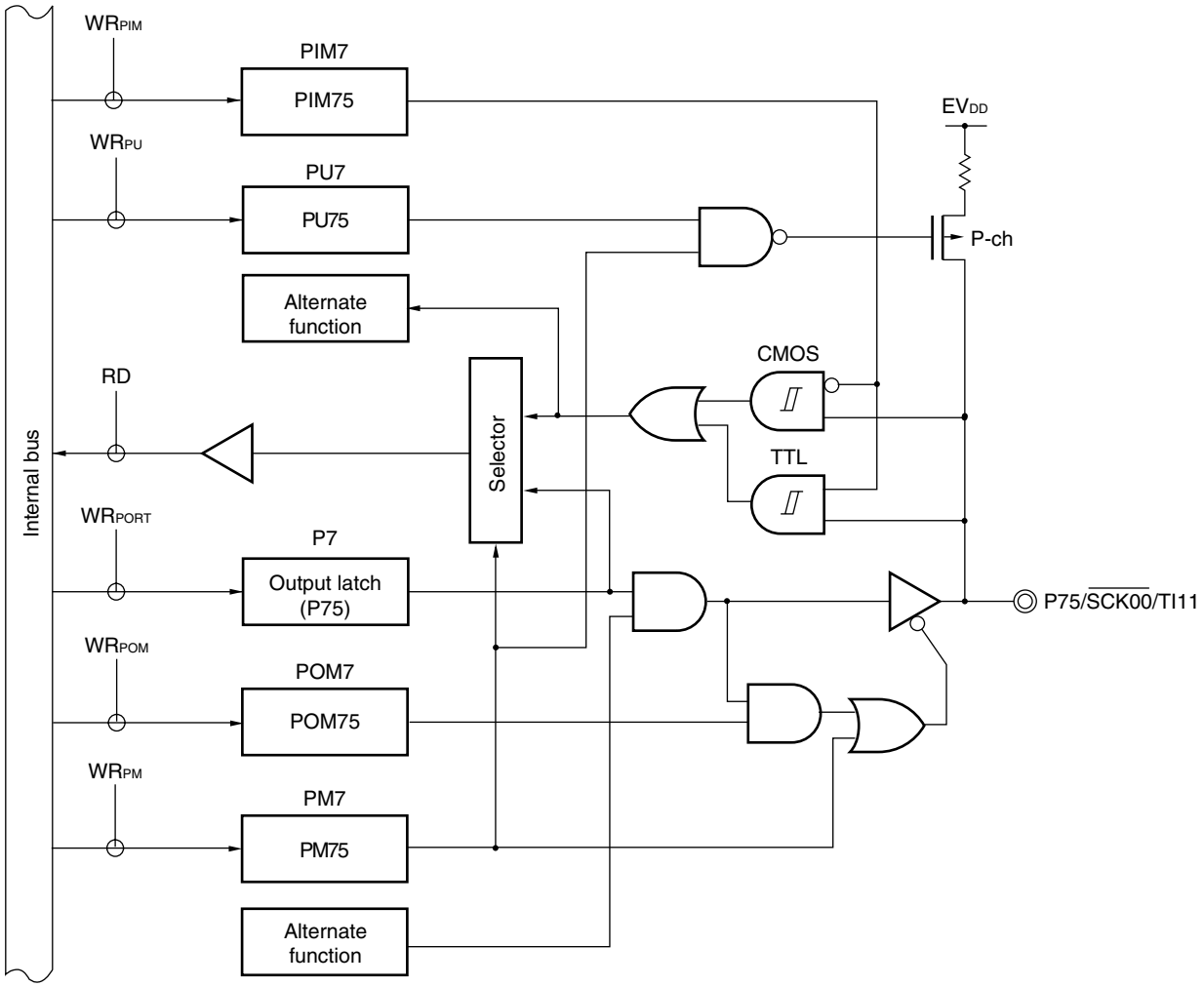

P7: Port register 7
PU7: Pull-up resistor option register 7
PM7: Port mode register 7
PIM7: Port output mode register 7
POM7: Port output mode register 7
RD: Read signal
WR××: Write signal

Remark With products not provided with an EV_{DD} or EV_{SS} pin, replace EV_{DD} with V_{DD}, or replace EV_{SS} with V_{SS}.

Figure 4-19. Block Diagram of P76 and P77

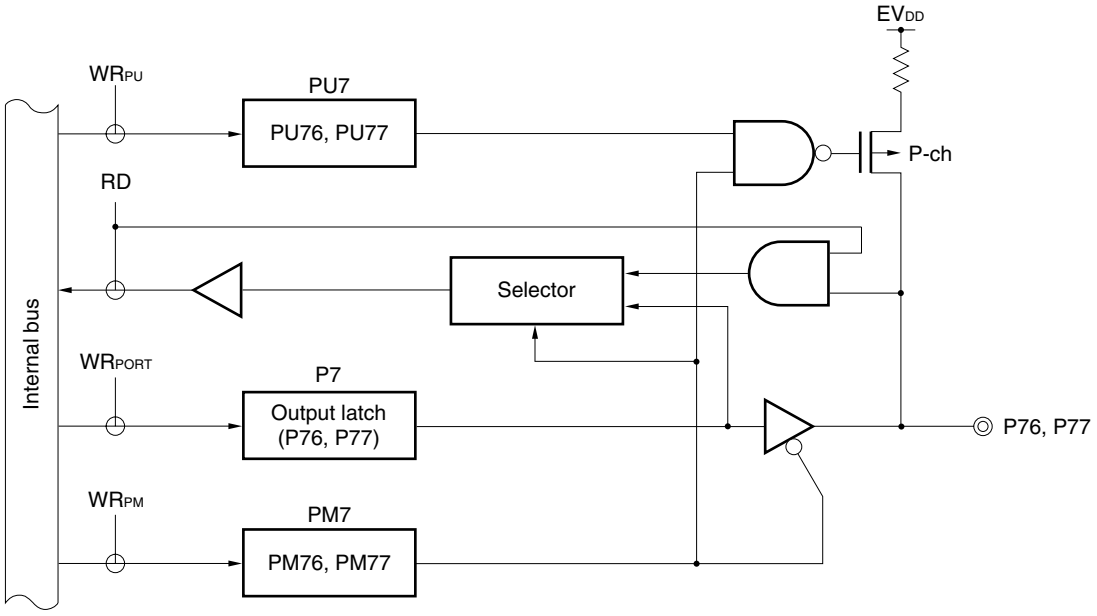

P7: Port register 7

PU7: Pull-up resistor option register 7

PM7: Port mode register 7

RD: Read signal

WR××: Write signal

4.2.9 Port 8

	78K0R/IB3	78K0R/IC3			78K0R/ID3	78K0R/IE3
		(38-pin)	(44-pin)	(48-pin)		
P80/CMP0P/TMOFF0/INTP3/PGAI	√	√	√	√	√	√
P81/CMP0M	√	√	√	√	√	√
P82/CMP1P/TMOFF1/INTP7	–	√	√	√	√	√
P83/CMP1M	√	√	√	√	√	√

Port 8 is I/O port with an output latch. Port 8 can be set to the input mode or output mode in 1-bit units using port mode register 8 (PM8).

Digital Inputs to the P80 to P83 pins must be enabled or disabled in 1-bit units using port input mode register 8 (PIM8).

This port can also be used for an input voltage on the (+) sides of comparators 0 and 1, an input voltage on the (–) sides of comparators 0 and 1, a timer pin Hi-Z control input, an external interrupt request input, and an programmable gain amplifier input.

Reset signal generation sets port 8 to analog input mode.

Figures 4-20 to 4-22 show block diagrams of port 8.

Figure 4-20. Block Diagram of P80

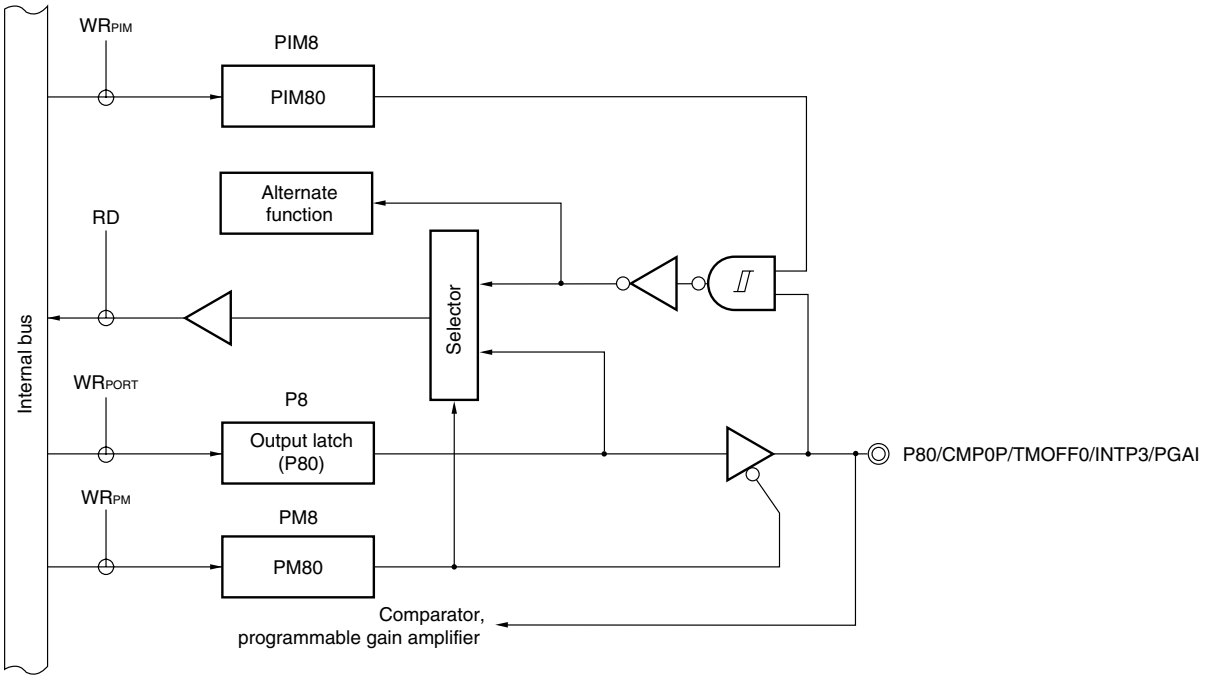

P8: Port register 8
PM8: Port mode register 8
PIM8: Port input mode register 8
RD: Read signal
WR××: Write signal

Figure 4-21. Block Diagram of P81 and P83

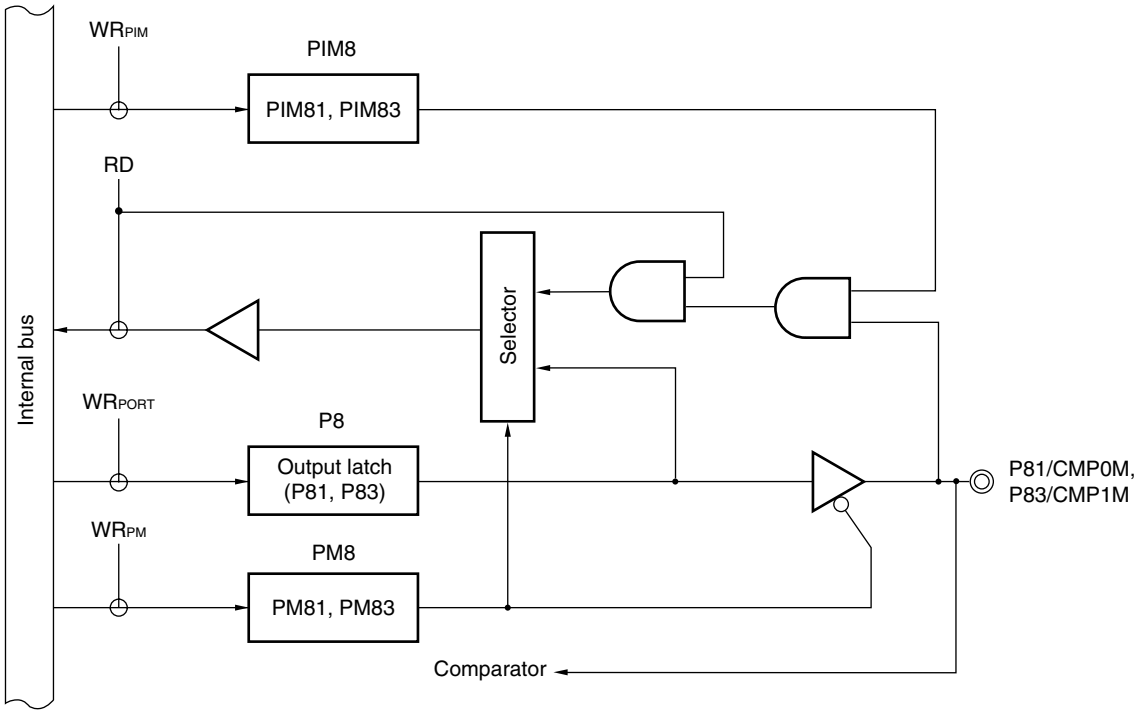

P8: Port register 8

PM8: Port mode register 8

PIM8: Port input mode register 8

RD: Read signal

WR××: Write signal

Figure 4-22. Block Diagram of P82

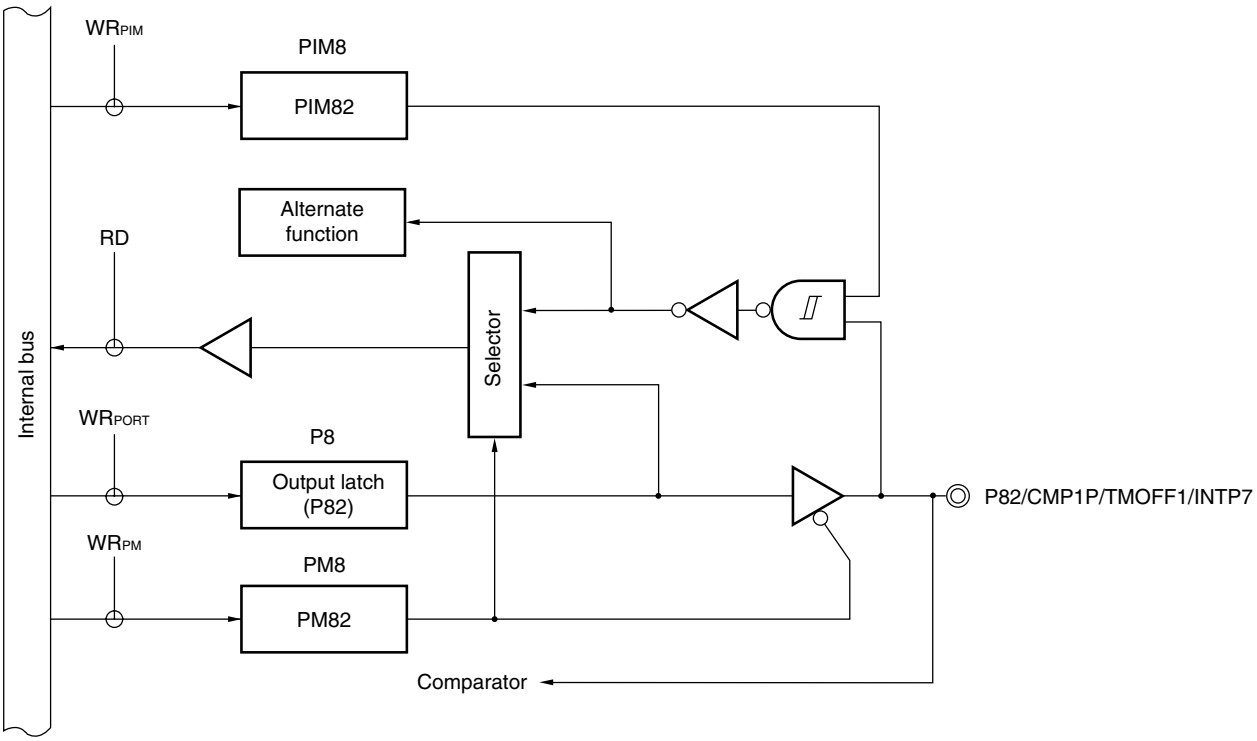

P8: Port register 8

PM8: Port mode register 8

PIM8: Port input mode register 8

RD: Read signal

WR××: Write signal

4.2.10 Port 12

	78K0R/IB3	78K0R/IC3			78K0R/ID3	78K0R/IE3
		(38-pin)	(44-pin)	(48-pin)		
P120/INTP0/ EXLVI	√	√	√	√	√	√
P121/X1/INTP4	√	√	P121/X1 Note	P121/X1 Note	P121/X1 Note	P121/X1 Note
P122/X2/ EXCLK/INTP5	√	√	P122/X2/EXCLK Note	P122/X2/EXCLK Note	P122/X2/EXCLK Note	P122/X2/EXCLK Note
P123/XT1	–	√	√	√	√	√
P124/XT2	–	√	√	√	√	√

P120 is I/O port with an output latch. Port 12 can be set to the input mode or output mode in 1-bit units using port mode register 12 (PM12). When used as an input port, use of an on-chip pull-up resistor can be specified by pull-up resistor option register 12 (PU12).

P121 to P124 are 4-bit input ports.

This port can also be used for external interrupt request input, potential input for external low-voltage detection, connecting resonator for main system clock, connecting resonator for subsystem clock, and external clock input for main system clock.

Reset signal generation sets port 12 to input mode.

Figures 4-23 to 4-25 show block diagrams of port 12.

Note INTP4 and INTP5 are shared with P70 and P71, respectively, in products other than the 78K0R/IB3 and the 38-pin products of the 78K0R/IC3.

Caution The function setting on P121 to P124 is available only once after the reset release. The port once set for connection to an oscillator cannot be used as an input port unless the reset is performed.

Figure 4-23. Block Diagram of P120

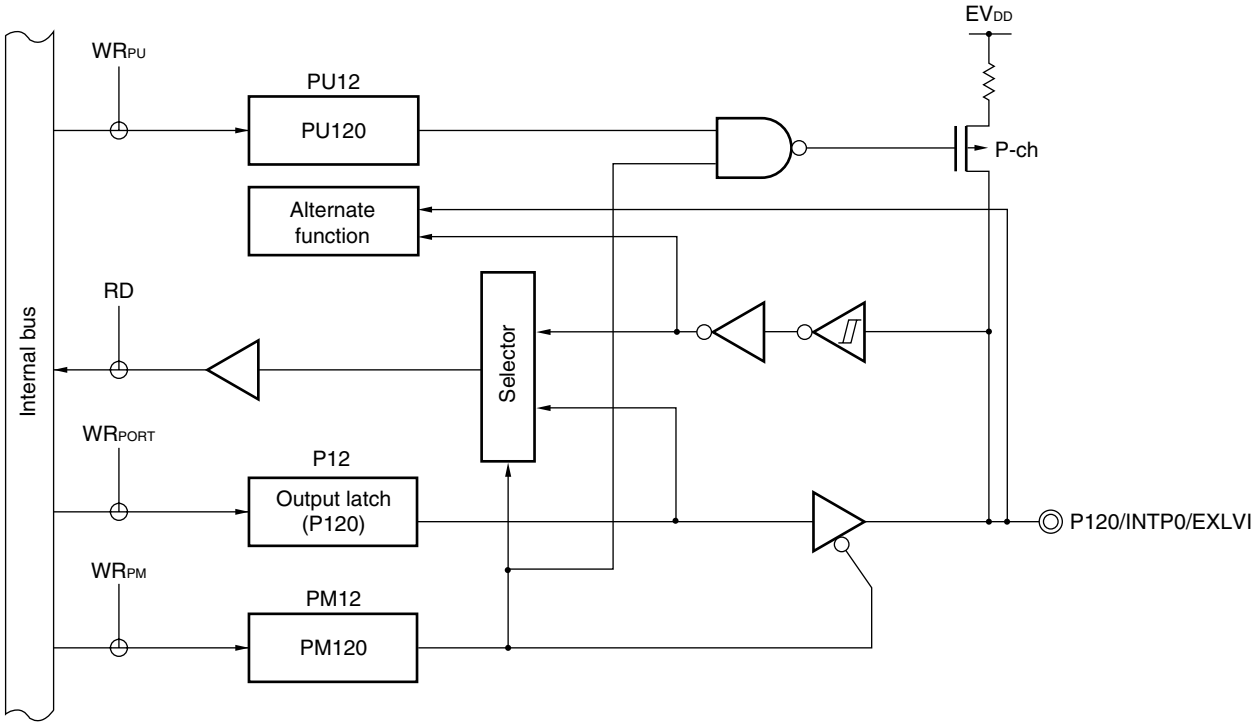

P12: Port register 12

PU12: Pull-up resistor option register 12

PM12: Port mode register 12

RD: Read signal

WR××: Write signal

Remark With products not provided with an EV_{DD} or EV_{SS} pin, replace EV_{DD} with V_{DD}, or replace EV_{SS} with V_{SS}.

Figure 4-24. Block Diagram of P121 and P122 (1/2)

(1) 78K0R/IB3 and 38-pin products of 78K0R/IC3

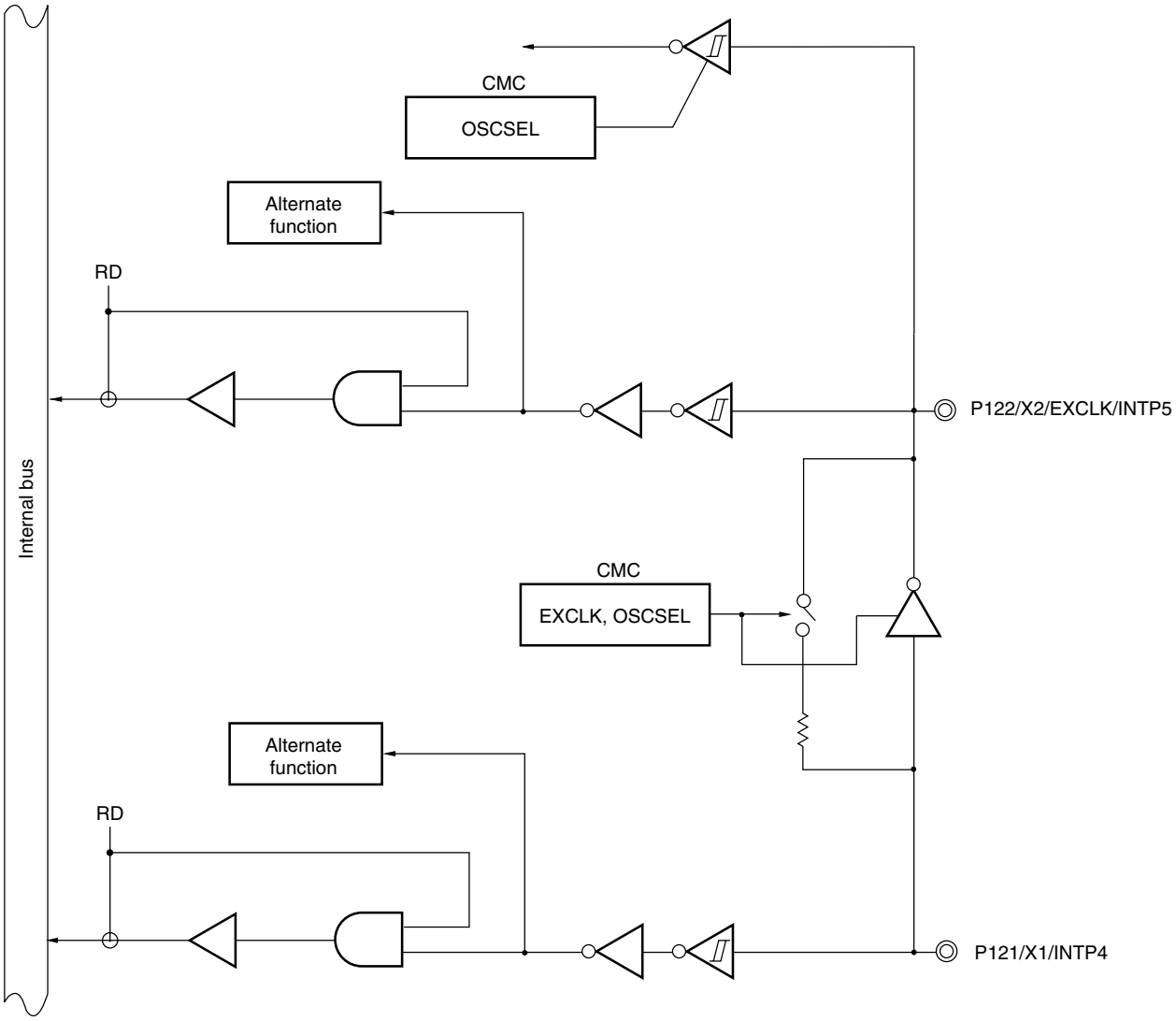

CMC: Clock operation mode control register

RD: Read signal

Figure 4-24. Block Diagram of P121 and P122 (2/2)

(1) 44-pin and 48-pin products of 78K0R/IC3, 78K0R/ID3, 78K0R/IE3

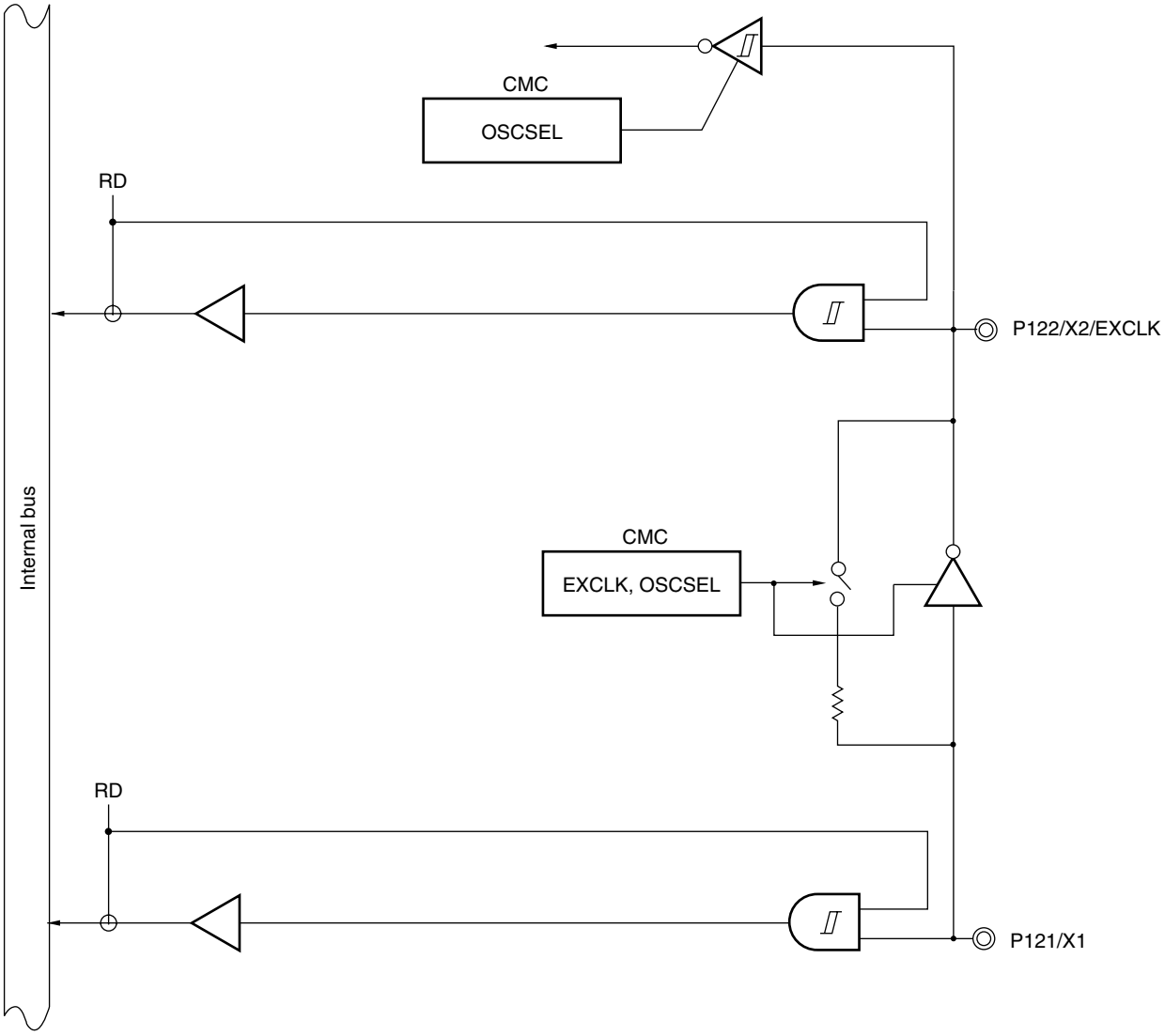

CMC: Clock operation mode control register
RD: Read signal

Figure 4-25. Block Diagram of P123 and P124

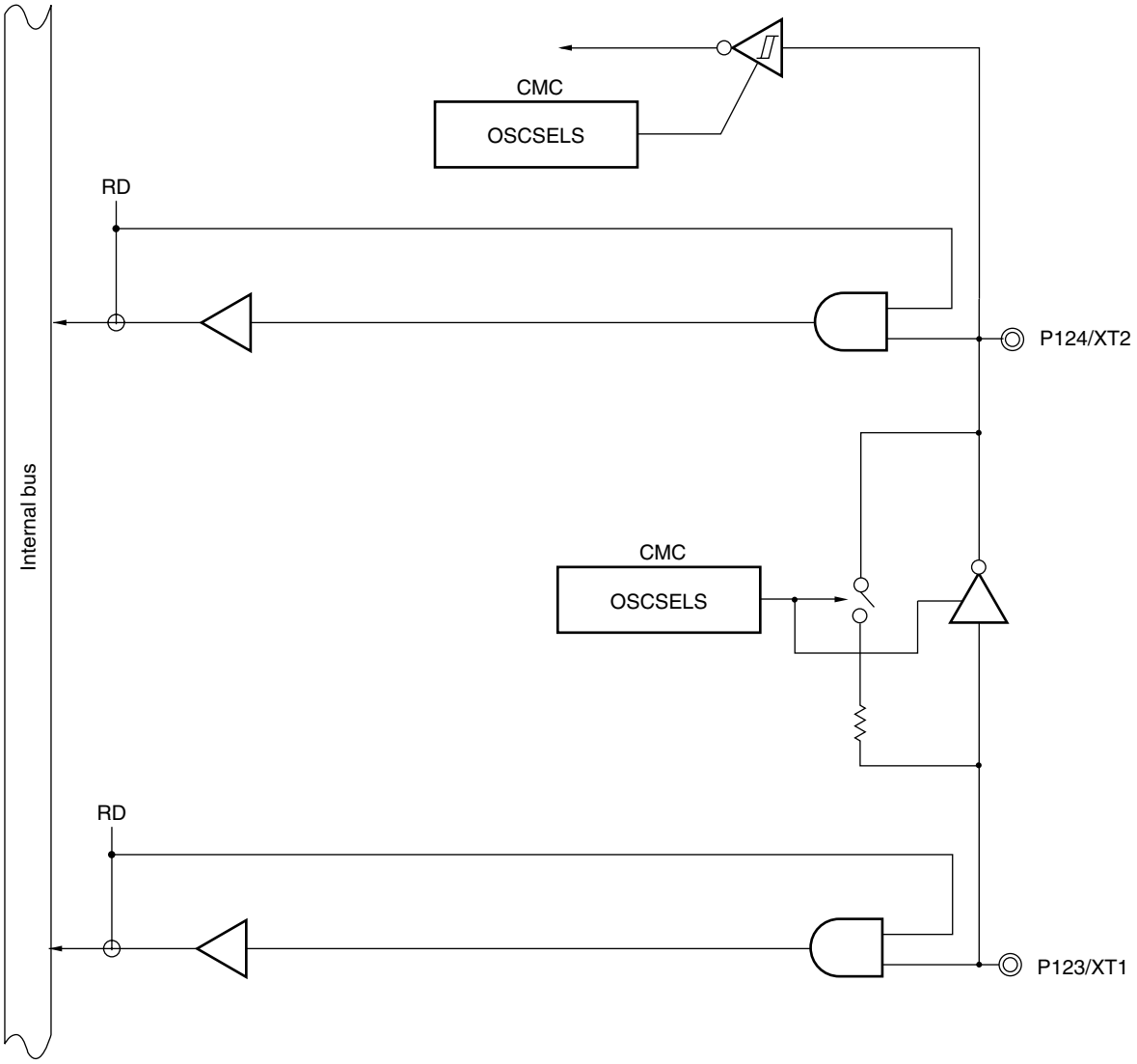

CMC: Clock operation mode control register
RD: Read signal

4.2.11 Port 14

	78K0R/IB3	78K0R/IC3			78K0R/ID3	78K0R/IE3
		(38-pin)	(44-pin)	(48-pin)		
P140/PCLBUZ0	–	–	–	√	√	√
P141/PCLBUZ1	–	–	–	–	–	√

P140 is a output port with an output latch.

P141 is I/O port with an output latch. P141 can be set to the input mode or output mode in 1-bit units using port mode register 14 (PM14). When the P141 pin is used as an input port, use of an on-chip pull-up resistor can be specified in 1-bit units by pull-up resistor option register 14 (PU14).

This port can also be used for clock/buzzer output.

Reset signal generation sets P141 to input mode.

Figures 4-26 and 4-27 show block diagrams of port 14.

Caution To use P140/PCLBUZ0 and P141/PCLBUZ1 as general-purpose ports, set bit 7 of clock output select registers 0 and 1 (CKS0, CKS1) to “0”, which is the same as their default status setting.

Figure 4-26. Block Diagram of P140

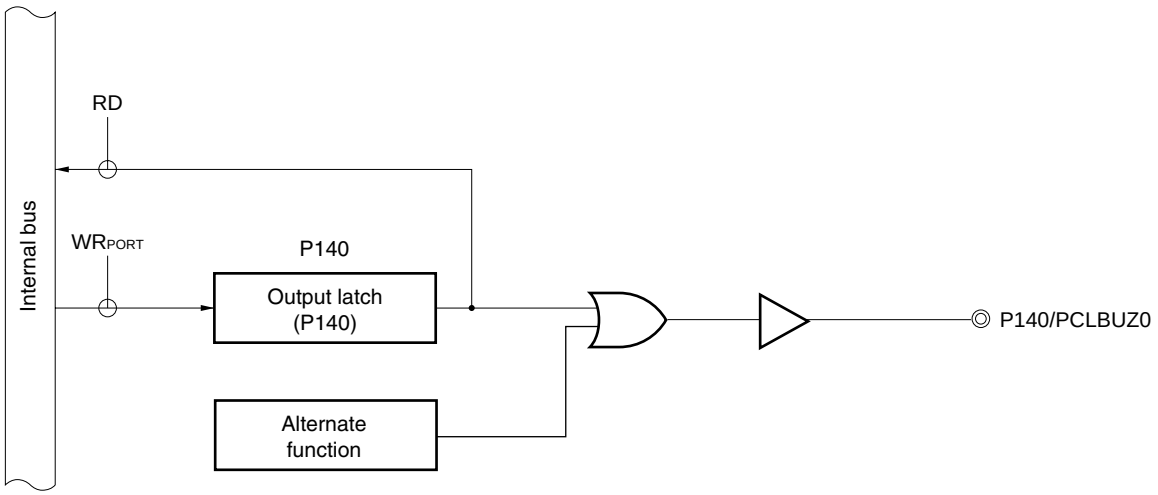

P14: Port register 14
RD: Read signal
WR××: Write signal

Remark The P140 pin outputs a low level when it is used as a port function pin and a reset is effected. If P140 is set to output a high level before reset is effected, the output signal of P140 can be dummy-output as the CPU reset signal.

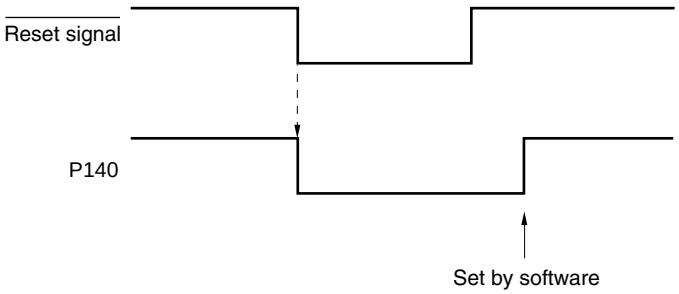

Figure 4-27. Block Diagram of P141

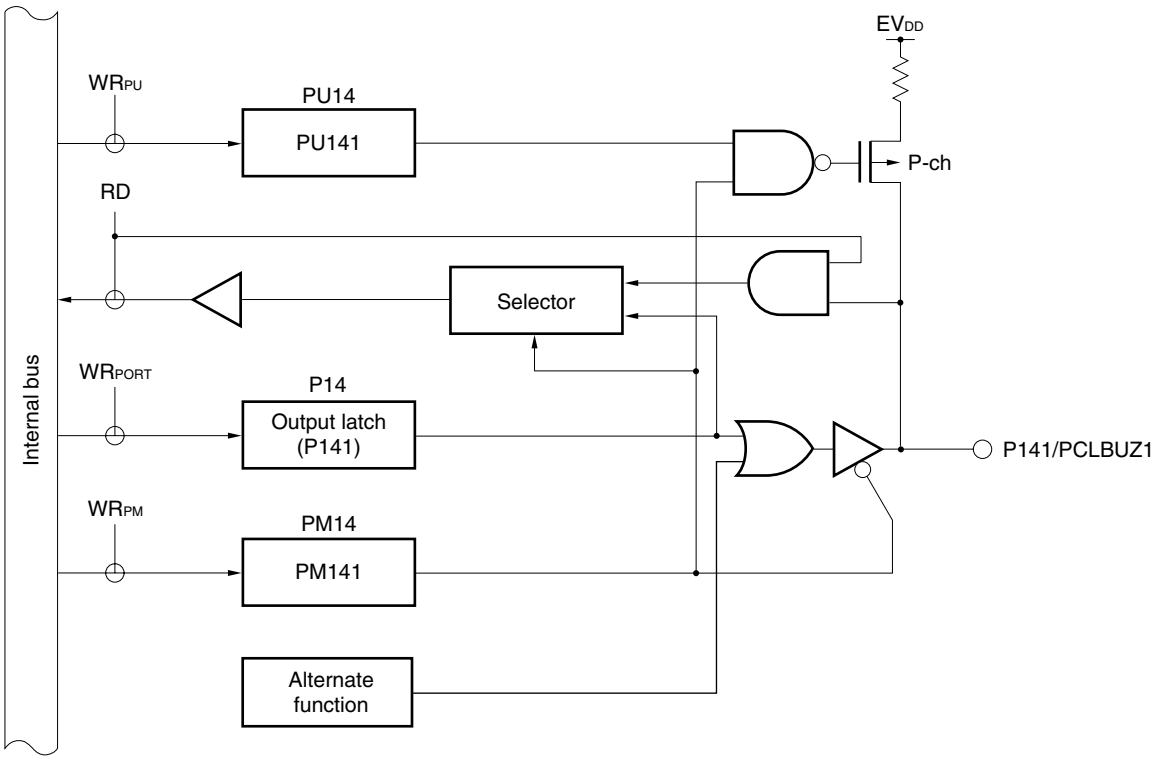

P14: Port register 14
PU14: Pull-up resistor option register 14
PM14: Port mode register 14
RD: Read signal
WR××: Write signal

4.2.12 Port 15

	78K0R/IB3	78K0R/IC3			78K0R/ID3	78K0R/IE3
		(38-pin)	(44-pin)	(48-pin)		
P150/ANI8	–	–	√	√	√	√
P151/ANI9	–	–	√	√	√	√
P152/ANI10	–	–	–	√	√	√
P153/ANI11	–	–	–	–	–	√

Port 15 is an I/O port with an output latch. Port 15 can be set to the input mode or output mode in 1-bit units using port mode register 15 (PM15).

This port can also be used for A/D converter analog input.

To use P150/ANI8 to P153/ANI11 as digital input pins, set them in the digital I/O mode by using the A/D port configuration register (ADPC) and in the input mode by using PM15. Use these pins starting from the lower bit.

To use P150/ANI8 to P153/ANI11 as digital output pins, set them in the digital I/O mode by using ADPC and in the output mode by using PM15.

Table 4-8. Setting Functions of P150/ANI8 to P153/ANI11 Pins

ADPC	PM15	ADS	P150/ANI8 to P153/ANI11 Pins
Digital I/O selection	Input mode	–	Digital input
	Output mode	–	Digital output
Analog input selection	Input mode	Selects ANI.	Analog input (to be converted)
		Does not select ANI.	Analog input (not to be converted)
	Output mode	Selects ANI.	Setting prohibited
		Does not select ANI.	

All P150/ANI8 to P153/ANI11 are set in the digital input mode when the reset signal is generated.

Figure 4-28 shows block diagram of port 15.

Caution Make the AV_{REF} pin the same potential as the V_{DD} and EV_{DD} pins when port 15 is used as a digital port.

Figure 4-28. Block Diagram of P150 to P153

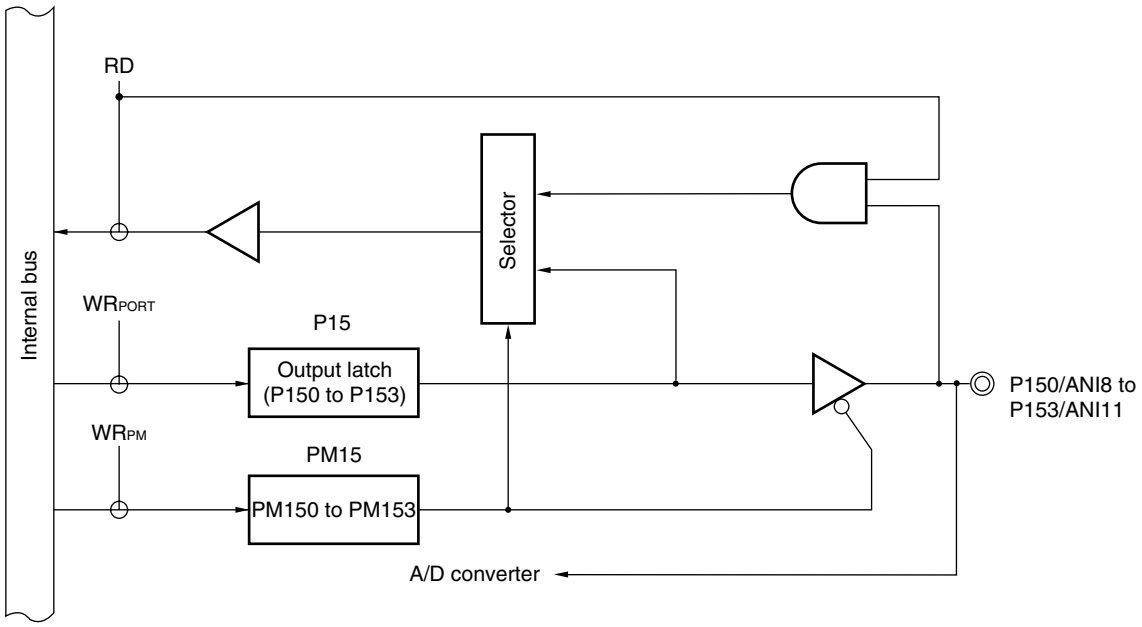

P15: Port register 15

PM15: Port mode register 15

RD: Read signal

WR××: Write signal

4.3 Registers Controlling Port Function

Port functions are controlled by the following six types of registers.

- Port mode registers (PMxx)
- Port registers (Pxx)
- Pull-up resistor option registers (PUxx)
- Port input mode registers (PIM3, PIM7, PIM8)
- Port output mode registers (POM3, POM7)
- A/D port configuration register (ADPC)

(1) Port mode registers (PMxx)

These registers specify input or output mode for the port in 1-bit units.

These registers can be set by a 1-bit or 8-bit memory manipulation instruction.

Reset signal generation sets PMxx registers to FFH, and sets PM14 register to FEH.

When port pins are used as alternate-function pins, set the port mode register by referencing **4.5 Settings of Port Mode Register and Output Latch When Using Alternate Function**.

Figure 4-29. Format of Port Mode Register (78K0R/IB3)

Symbol	7	6	5	4	3	2	1	0	Address	After reset	R/W
PM1	1	1	1	1	PM13	PM12	PM11	PM10	FFF21H	FFH	R/W
PM2	1	1	PM25	PM24	PM23	PM22	PM21	PM20	FFF22H	FFH	R/W
PM3	1	1	1	1	1	PM32	PM31	PM30	FFF23H	FFH	R/W
PM4	1	1	1	1	1	1	PM41	PM40	FFF24H	FFH	R/W
PM5	1	1	1	1	1	1	PM51	PM50	FFF25H	FFH	R/W
PM8	1	1	1	1	PM83	1	PM81	PM80	FFF28H	FFH	R/W
PM12	1	1	1	1	1	1	1	PM120	FFF2CH	FFH	R/W

PMmn	Pmn pin I/O mode selection (m = 1 to 5, 8 and 12; n = 0 to 5)
0	Output mode (output buffer on)
1	Input mode (output buffer off)

Caution Be sure to set the following bits to 1.

- **Bits 4 to 7 of the PM1 register**
- **Bits 6 and 7 of the PM2 register**
- **Bits 3 to 7 of the PM3 register**
- **Bits 2 to 7 of the PM4 register**
- **Bits 2 to 7 of the PM5 register**
- **Bits 2 and 4 to 7 of the PM8 register**
- **Bits 1 to 7 of the PM12 register**

Figure 4-30. Format of Port Mode Register (78K0R/IC3)

Symbol	7	6	5	4	3	2	1	0	Address	After reset	R/W
PM1	1	1	1	1	PM13	PM12	PM11	PM10	FFF21H	FFH	R/W
PM2	PM27	PM26	PM25	PM24	PM23	PM22	PM21	PM20	FFF22H	FFH	R/W
PM3	1	1	1	1	1	PM32	PM31	PM30	FFF23H	FFH	R/W
PM4	1	1	1	1	1	1	PM41	PM40	FFF24H	FFH	R/W
PM5	1	1	1	1	1	PM52	PM51	PM50	FFF25H	FFH	R/W
PM6 Note1	1	1	1	1	1	1	PM61	PM60	FFF26H	FFH	R/W
PM7	1	1	PM75 Note 2	PM74 Note 2	PM73	PM72	PM71 Note 2	PM70 Note 2	FFF27H	FFH	R/W
PM8	1	1	1	1	PM83	PM82	PM81	PM80	FFF28H	FFH	R/W
PM12	1	1	1	1	1	1	1	PM120	FFF2CH	FFH	R/W
PM15 Note 2	1	1	1	1	1	PM152 Note 1	PM151	PM150	FFF2FH	FFH	R/W

PMmn	Pmn pin I/O mode selection (m = 1 to 8, 12 and 15; n = 0 to 7)
0	Output mode (output buffer on)
1	Input mode (output buffer off)

Notes 1. 48-pin products only.
2. 44-pin and 48-pin products only.

Caution Be sure to set the following bits to 1.

- **Bits 4 to 7 of the PM1 register**
- **Bits 3 to 7 of the PM3 register**
- **Bits 2 to 7 of the PM4 register**
- **Bits 3 to 7 of the PM5 register**
- **Bits 2 to 7 of the PM6 register**
- **Bits 6 and 7 of the PM7 register (38-pin products: bits 0, 1 and 4 to 7)**
- **Bits 4 to 7 of the PM8 register**
- **Bits 1 to 7 of the PM12 register**
- **Bits 4 to 7 of the PM15 register (44-pin products: bits 2 to 7)**

Figure 4-31. Format of Port Mode Register (78K0R/ID3)

Symbol	7	6	5	4	3	2	1	0	Address	After reset	R/W
PM0	1	1	1	1	1	1	PM01	PM00	FFF20H	FFH	R/W
PM1	1	1	1	1	PM13	PM12	PM11	PM10	FFF21H	FFH	R/W
PM2	PM27	PM26	PM25	PM24	PM23	PM22	PM21	PM20	FFF22H	FFH	R/W
PM3	1	1	1	1	1	PM32	PM31	PM30	FFF23H	FFH	R/W
PM4	1	1	1	1	1	1	PM41	PM40	FFF24H	FFH	R/W
PM5	1	1	1	1	1	PM52	PM51	PM50	FFF25H	FFH	R/W
PM6	1	1	1	1	1	1	PM61	PM60	FFF26H	FFH	R/W
PM7	PM77	PM77	PM75	PM74	PM73	PM72	PM71	PM70	FFF27H	FFH	R/W
PM8	1	1	1	1	PM83	PM82	PM81	PM80	FFF28H	FFH	R/W
PM12	1	1	1	1	1	1	1	PM120	FFF2CH	FFH	R/W
PM15	1	1	1	1	1	PM152	PM151	PM150	FFF2FH	FFH	R/W

PMmn	Pmn pin I/O mode selection (m = 0 to 8, 12 and 15; n = 0 to 7)
0	Output mode (output buffer on)
1	Input mode (output buffer off)

Caution Be sure to set the following bits to 1.

- **Bits 2 to 7 of the PM0 register**
- **Bits 4 to 7 of the PM1 register**
- **Bits 3 to 7 of the PM3 register**
- **Bits 2 to 7 of the PM4 register**
- **Bits 3 to 7 of the PM5 register**
- **Bits 2 to 7 of the PM6 register**
- **Bits 4 to 7 of the PM8 register**
- **Bits 1 to 7 of the PM12 register**
- **Bits 3 to 7 of the PM15 register**

Figure 4-32. Format of Port Mode Register (78K0R/IE3)

Symbol	7	6	5	4	3	2	1	0	Address	After reset	R/W
PM0	1	1	1	1	1	1	PM01	PM00	FFF20H	FFH	R/W
PM1	PM17	PM16	PM15	PM14	PM13	PM12	PM11	PM10	FFF21H	FFH	R/W
PM2	PM27	PM26	PM25	PM24	PM23	PM22	PM21	PM20	FFF22H	FFH	R/W
PM3	1	1	1	1	PM33	PM32	PM31	PM30	FFF23H	FFH	R/W
PM4	1	1	1	1	PM43	PM42	PM41	PM40	FFF24H	FFH	R/W
PM5	1	1	1	1	PM53	PM52	PM51	PM50	FFF25H	FFH	R/W
PM6	1	1	1	1	1	1	PM61	PM60	FFF26H	FFH	R/W
PM7	PM77	PM77	PM75	PM74	PM73	PM72	PM71	PM70	FFF27H	FFH	R/W
PM8	1	1	1	1	PM83	PM82	PM81	PM80	FFF28H	FFH	R/W
PM12	1	1	1	1	1	1	1	PM120	FFF2CH	FFH	R/W
PM14	1	1	1	1	1	1	PM141	0	FFF2EH	FEH	R/W
PM15	1	1	1	1	PM153	PM152	PM151	PM150	FFF2FH	FFH	R/W

PMmn	Pmn pin I/O mode selection (m = 0 to 8, 12, 14 and 15; n = 0 to 7)
0	Output mode (output buffer on)
1	Input mode (output buffer off)

Caution Be sure to set the following bits to 1.

- **Bits 2 to 7 of the PM0 register**
- **Bits 4 to 7 of the PM3 register**
- **Bits 4 to 7 of the PM4 register**
- **Bits 4 to 7 of the PM5 register**
- **Bits 2 to 7 of the PM6 register**
- **Bits 4 to 7 of the PM8 register**
- **Bits 1 to 7 of the PM12 register**
- **Bits 2 to 7 of the PM14 register**
- **Bits 4 to 7 of the PM15 register**

Also, be sure to clear bit 0 of PM14 to 0.

(2) Port registers (Pxx)

These registers write the data that is output from the chip when data is output from a port.

If the data is read in the input mode, the pin level is read. If it is read in the output mode, the output latch value is read[Note].

Port registers can be set by a 1-bit or 8-bit memory manipulation instruction.

Reset signal generation clears these registers to 00H.

Note It is always 0 and never a pin level that is read out if a port is read during the input mode when P2 and P15 are set to function as an analog input for a A/D converter.

Figure 4-33. Format of Port Register (78K0R/IB3)

Symbol	7	6	5	4	3	2	1	0	Address	After reset	R/W
P1	0	0	0	0	P13	P12	P11	P10	FFF01H	00H (output latch)	R/W
P2	0	0	P25	P24	P23	P22	P21	P20	FFF02H	00H (output latch)	R/W
P3	0	0	0	0	0	P32	P31	P30	FFF03H	00H (output latch)	R/W
P4	0	0	0	0	0	0	P41	P40	FFF04H	00H (output latch)	R/W
P5	0	0	0	0	0	0	P51	P50	FFF05H	00H (output latch)	R/W
P8	0	0	0	0	P83	0	P81	P80	FFF08H	00H (output latch)	R/W
P12	0	0	0	0	0	P122	P121	P120	FFF0CH	Undefined	R/W[Note]

Pmn	m = 1 to 5, 8 and 12 ; n = 0 to 5	
	Output data control (in output mode)	Input data read (in input mode)
0	Output 0	Input low level
1	Output 1	Input high level

Note P121 and P122 are read-only.

Figure 4-34. Format of Port Register (78K0R/IC3)

Symbol	7	6	5	4	3	2	1	0	Address	After reset	R/W
P1	0	0	0	0	P13	P12	P11	P10	FFF01H	00H (output latch)	R/W
P2	P27	P26	P25	P24	P23	P22	P21	P20	FFF02H	00H (output latch)	R/W
P3	0	0	0	0	0	P32	P31	P30	FFF03H	00H (output latch)	R/W
P4	0	0	0	0	0	0	P41	P40	FFF04H	00H (output latch)	R/W
P5	0	0	0	0	0	P52	P51	P50	FFF05H	00H (output latch)	R/W
P6 Note 1	0	0	0	0	0	0	P61	P60	FFF06H	00H (output latch)	R/W
P7	0	0	P75 Note 2	P74 Note 2	P73	P72	P71 Note 2	P70 Note 2	FFF07H	00H (output latch)	R/W
P8	0	0	0	0	P83	P82	P81	P80	FFF08H	00H (output latch)	R/W
P12	0	0	0	P124	P123	P122	P121	P120	FFF0CH	Undefined	R/W Note 3
P14 Note 1	0	0	0	0	0	0	0	P140	FFF0EH	00H (output latch)	R/W
P15 Note 2	0	0	0	0	0	P152 Note 1	P151	P150	FFF0FH	00H (output latch)	R/W

Pmn	m = 1 to 8, 12, 14 and 15; n = 0 to 7	
	Output data control (in output mode)	Input data read (in input mode)
0	Output 0	Input low level
1	Output 1	Input high level

Notes 1. 48-pin products only.

2. 44-pin and 48-pin products only.

3. P121 to P124 are read-only.

Figure 4-35. Format of Port Register (78K0R/ID3)

Symbol	7	6	5	4	3	2	1	0	Address	After reset	R/W
P0	0	0	0	0	0	0	P01	P00	FFF00H	00H (output latch)	R/W
P1	0	0	0	0	P13	P12	P11	P10	FFF01H	00H (output latch)	R/W
P2	P27	P26	P25	P24	P23	P22	P21	P20	FFF02H	00H (output latch)	R/W
P3	0	0	0	0	0	P32	P31	P30	FFF03H	00H (output latch)	R/W
P4	0	0	0	0	0	0	P41	P40	FFF04H	00H (output latch)	R/W
P5	0	0	0	0	0	P52	P51	P50	FFF05H	00H (output latch)	R/W
P6	0	0	0	0	0	0	P61	P60	FFF06H	00H (output latch)	R/W
P7	P77	P76	P75	P74	P73	P72	P71	P70	FFF07H	00H (output latch)	R/W
P8	0	0	0	0	P83	P82	P81	P80	FFF08H	00H (output latch)	R/W
P12	0	0	0	P124	P123	P122	P121	P120	FFF0CH	Undefined	R/W[Note]
P14	0	0	0	0	0	0	0	P140	FFF0EH	00H (output latch)	R/W
P15	0	0	0	0	0	P152	P151	P150	FFF0FH	00H (output latch)	R/W

Pmn	m = 0 to 8, 12, and 15; n = 0 to 7	
	Output data control (in output mode)	Input data read (in input mode)
0	Output 0	Input low level
1	Output 1	Input high level

Note P121 to P124 are read-only.

Figure 4-36. Format of Port Register (78K0R/IE3)

Symbol	7	6	5	4	3	2	1	0	Address	After reset	R/W
P0	0	0	0	0	0	0	P01	P00	FFF00H	00H (output latch)	R/W
P1	P17	P16	P15	P14	P13	P12	P11	P10	FFF01H	00H (output latch)	R/W
P2	P27	P26	P25	P24	P23	P22	P21	P20	FFF02H	00H (output latch)	R/W
P3	0	0	0	0	P33	P32	P31	P30	FFF03H	00H (output latch)	R/W
P4	0	0	0	0	P43	P42	P41	P40	FFF04H	00H (output latch)	R/W
P5	0	0	0	0	P53	P52	P51	P50	FFF05H	00H (output latch)	R/W
P6	0	0	0	0	0	0	P61	P60	FFF06H	00H (output latch)	R/W
P7	P77	P76	P75	P74	P73	P72	P71	P70	FFF07H	00H (output latch)	R/W
P8	0	0	0	0	P83	P82	P81	P80	FFF08H	00H (output latch)	R/W
P12	0	0	0	P124	P123	P122	P121	P120	FFF0CH	Undefined	R/W[Note]
P14	0	0	0	0	0	0	P141	P140	FFF0EH	00H (output latch)	R/W
P15	0	0	0	0	P153	P152	P151	P150	FFF0FH	00H (output latch)	R/W

Pmn	m = 0 to 8, 12, 14, 15; n = 0 to 7	
	Output data control (in output mode)	Input data read (in input mode)
0	Output 0	Input low level
1	Output 1	Input high level

Note P121 to P124 are read-only.

(3) Pull-up resistor option registers (PUxx)

These registers specify whether the on-chip pull-up resistors of PUxx are to be used or not. On-chip pull-up resistors can be used in 1-bit units only for the bits set to input mode of the pins to which the use of an on-chip pull-up resistor has been specified in PUxx. On-chip pull-up resistors cannot be connected to bits set to output mode and bits used as alternate-function output pins, regardless of the settings of Pull-up resistor option registers.

Pull-up resistor option registers can be set by a 1-bit or 8-bit memory manipulation instruction.

Reset signal generation clears these registers to 00H.

Figure 4-37. Format of Pull-up Resistor Option Register (78K0R/IB3)

Symbol	7	6	5	4	3	2	1	0	Address	After reset	R/W
PU1	0	0	0	0	PU13	PU12	PU11	PU10	F0031H	00H	R/W
PU3	0	0	0	0	0	PU32	PU31	PU30	F0033H	00H	R/W
PU4	0	0	0	0	0	0	PU41	PU40	F0034H	00H	R/W
PU5	0	0	0	0	0	0	PU51	PU50	F0035H	00H	R/W
PU12	0	0	0	0	0	0	0	PU120	F003CH	00H	R/W

PUmn	Pmn pin on-chip pull-up resistor selection (m = 1, 3 to 5, and 12 ; n = 0 to 3)
0	On-chip pull-up resistor not connected
1	On-chip pull-up resistor connected

Figure 4-38. Format of Pull-up Resistor Option Register (78K0R/IC3)

Symbol	7	6	5	4	3	2	1	0	Address	After reset	R/W
PU1	0	0	0	0	PU13	PU12	PU11	PU10	F0031H	00H	R/W
PU3	0	0	0	0	0	PU32	PU31	PU30	F0033H	00H	R/W
PU4	0	0	0	0	0	0	PU41	PU40	F0034H	00H	R/W
PU5	0	0	0	0	0	PU52	PU51	PU50	F0035H	00H	R/W
PU7	0	0	PU75 Note	PU74 Note	PU73	PU72	PU71 Note	PU70 Note	F0037H	00H	R/W
PU12	0	0	0	0	0	0	0	PU120	F003CH	00H	R/W

PUmn	Pmn pin on-chip pull-up resistor selection (m = 1, 3 to 5, 7 and 12 ; n = 0 to 5)
0	On-chip pull-up resistor not connected
1	On-chip pull-up resistor connected

Note 44-pin and 48-pin products only.

Figure 4-39. Format of Pull-up Resistor Option Register (78K0R/ID3)

Symbol	7	6	5	4	3	2	1	0	Address	After reset	R/W
PU0	0	0	0	0	0	0	PU01	PU00	F0030H	00H	R/W
PU1	0	0	0	0	PU13	PU12	PU11	PU10	F0031H	00H	R/W
PU3	0	0	0	0	0	PU32	PU31	PU30	F0033H	00H	R/W
PU4	0	0	0	0	0	0	PU41	PU40	F0034H	00H	R/W
PU5	0	0	0	0	0	PU52	PU51	PU50	F0035H	00H	R/W
PU7	PU77	PU76	PU75	PU74	PU73	PU72	PU71	PU70	F0037H	00H	R/W
PU12	0	0	0	0	0	0	0	PU120	F003CH	00H	R/W

PUmn	Pmn pin on-chip pull-up resistor selection (m = 0, 1, 3 to 5, 7 and 12; n = 0 to 7)
0	On-chip pull-up resistor not connected
1	On-chip pull-up resistor connected

Figure 4-40. Format of Pull-up Resistor Option Register (78K0R/ IE3)

Symbol	7	6	5	4	3	2	1	0	Address	After reset	R/W
PU0	0	0	0	0	0	0	PU01	PU00	F0030H	00H	R/W
PU1	PU17	PU16	PU15	PU14	PU13	PU12	PU11	PU10	F0031H	00H	R/W
PU3	0	0	0	0	PU33	PU32	PU31	PU30	F0033H	00H	R/W
PU4	0	0	0	0	PU43	PU42	PU41	PU40	F0034H	00H	R/W
PU5	0	0	0	0	PU53	PU52	PU51	PU50	F0035H	00H	R/W
PU7	PU77	PU76	PU75	PU74	PU73	PU72	PU71	PU70	F0037H	00H	R/W
PU12	0	0	0	0	0	0	0	PU120	F003CH	00H	R/W
PU14	0	0	0	0	0	0	PU141	0	F003EH	00H	R/W

PUmn	Pmn pin on-chip pull-up resistor selection (m = 0, 1, 3 to 5, 7, 12, 14; n = 0 to 7)
0	On-chip pull-up resistor not connected
1	On-chip pull-up resistor connected

(4) Port input mode registers (PIM3, PIM7, PIM8)

PIM3 and PIM7 registers set the input buffer of P31, P32, P71, P72, P74, or P75 in 1-bit units.

TTL input buffer can be selected during serial communication with an external device of the different potential.

PIM8 is used to enable or disable the inputs to P80 to P83 in 1-bit units. When using a comparator or an programmable gain amplifier, the digital inputs are disabled (use P8n pin as the analog input) by software processing.

To use port functions, INTP3, INTP7, TMOFF0, TMOFF1 , the digital inputs must be enabled, because they are disabled (use PIM8 register as the analog input) by default.

These registers can be set by a 1-bit or 8-bit memory manipulation instruction.

Reset signal generation clears these registers to 00H.

Figure 4-41. Format of Port Input Mode Register

Symbol	7	6	5	4	3	2	1	0	Address	After reset	R/W
PIM3	0	0	0	0	0	PIM32	PIM31	0	F0043H	00H	R/W
PIM7 Note 1	0	0	PIM75 Note 2	PIM74 Note 2	0	PIM72	PIM71 Note 2	0	F0047H	00H	R/W
PIM8	0	0	0	0	PIM83	PIM82 Note 1	PIM81	PIM80	F0048H	00H	R/W

PIMmn	Pmn pin input buffer selection (m = 3 and 7; n = 1, 2, 4, 5)
0	Normal input buffer
1	TTL input buffer

PIM8n	P8n pin digital input enable/disable selection (n = 0 to 3)
0	Disables digital input (use P8n pin as the analog input)
1	Enables digital input

Notes 1. Those are not provided in the 78K0R/IB3.

2. Those are not provided in the 38-pin products of the 78K0R/IC3.

(5) Port output mode registers (POM3, POM7)

These registers set the output mode of P30 to P32, P70, P72, P73, or P75 in 1-bit units.

N-ch open drain output (V_{DD} tolerance) mode can be selected during serial communication with an external device of the different potential, and for the SDA10 pin during simplified I^2C communication with an external device of the same potential.

These registers can be set by a 1-bit or 8-bit memory manipulation instruction.

Reset signal generation clears these registers to 00H.

Figure 4-42. Format of Port Input Mode Register

Symbol	7	6	5	4	3	2	1	0	Address	After reset	R/W
POM3	0	0	0	0	0	POM32	POM31	POM30	F0053H	00H	R/W
POM7 Note 1	0	0	POM75 Note 2	0	POM73	POM72 Note 2	0	POM70 Note 2	F0057H	00H	R/W

POMmn	Pmn pin output mode selection (m = 3 and 7; n = 0 to 3 and 5)
0	Normal output mode
1	N-ch open-drain output (V_{DD} tolerance) mode

Notes 1. That is not provided in the 78K0R/IB3.

2. Those are not provided in the 38-pin products of the 78K0R/IC3.

(6) A/D port configuration register (ADPC)

This register switches the P20/ANI0 to P27/ANI7 and P150/ANI8 to P153/ANI11 pins to digital I/O of port or analog input of A/D converter.

ADPC can be set by a 1-bit or 8-bit memory manipulation instruction.

Reset signal generation sets this register to 10H.

Figure 4-43. Format of A/D Port Configuration Register (ADPC)

Address: F0017H After reset: 10H R/W

Symbol	7	6	5	4	3	2	1	0
ADPC	0	0	0	ADPC4	ADPC3	ADPC2	ADPC1	ADPC0

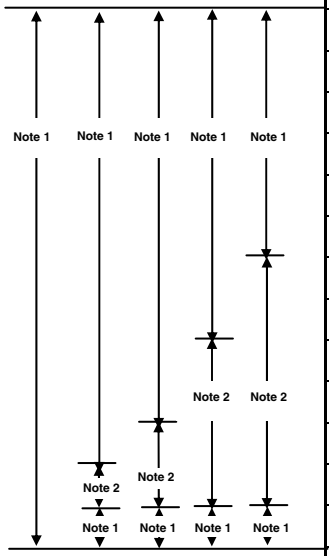

ADPC4	ADPC3	ADPC2	ADPC1	ADPC0	Analog input (A)/digital I/O (D) switching											
					Port 15				Port 2							
					ANI11/P153	ANI10/P152	ANI9/P151	ANI8/P150	ANI7/P27	ANI6/P26	ANI5/P25	ANI4/P24	ANI3/P23	ANI2/P22	ANI1/P21	ANI0/P20
0	0	0	0	0	A	A	A	A	A	A	A	A	A	A	A	A
0	0	0	0	1	A	A	A	A	A	A	A	A	A	A	A	D
0	0	0	1	0	A	A	A	A	A	A	A	A	A	A	D	D
0	0	0	1	1	A	A	A	A	A	A	A	A	A	D	D	D
0	0	1	0	0	A	A	A	A	A	A	A	A	D	D	D	D
0	0	1	0	1	A	A	A	A	A	A	A	D	D	D	D	D
0	0	1	1	0	A	A	A	A	A	A	D	D	D	D	D	D
0	0	1	1	1	A	A	A	A	A	D	D	D	D	D	D	D
0	1	0	0	0	A	A	A	A	D	D	D	D	D	D	D	D
0	1	0	0	1	A	A	A	D	D	D	D	D	D	D	D	D
0	1	0	1	0	A	A	D	D	D	D	D	D	D	D	D	D
0	1	0	1	1	A	D	D	D	D	D	D	D	D	D	D	D
1	0	0	0	0	D	D	D	D	D	D	D	D	D	D	D	D
Other than the above					Setting prohibited											

Notes 1. Setting permitted

2. Setting prohibited

Cautions 1. Set a channel to be used for A/D conversion in the input mode by using port mode register 2 and 15 (PM2, PM15).

2. Do not set the pin that is set by ADPC as digital I/O by ADS.

3. P20/ANI0 to P27/ANI7 and P150/ANI8 to P153/ANI11 are set as analog inputs in the order of P153/ANI11, …, P150/ANI8, P27/ANI7, …, P20/ANI0 by the A/D port configuration register (ADPC). When using P20/ANI0 to P27/ANI7 and P150/ANI8 to P153/ANI11 as analog inputs, start designing from P153/ANI11.

4.4 Port Function Operations

Port operations differ depending on whether the input or output mode is set, as shown below.

4.4.1 Writing to I/O port

(1) Output mode

A value is written to the output latch by a transfer instruction, and the output latch contents are output from the pin.
Once data is written to the output latch, it is retained until data is written to the output latch again.
The data of the output latch is cleared when a reset signal is generated.

(2) Input mode

A value is written to the output latch by a transfer instruction, but since the output buffer is off, the pin status does not change.
Once data is written to the output latch, it is retained until data is written to the output latch again.
The data of the output latch is cleared when a reset signal is generated.

4.4.2 Reading from I/O port

(1) Output mode

The output latch contents are read by a transfer instruction. The output latch contents do not change.

(2) Input mode

The pin status is read by a transfer instruction. The output latch contents do not change.

4.4.3 Operations on I/O port

(1) Output mode

An operation is performed on the output latch contents, and the result is written to the output latch. The output latch contents are output from the pins.
Once data is written to the output latch, it is retained until data is written to the output latch again.
The data of the output latch is cleared when a reset signal is generated.

(2) Input mode

The pin level is read and an operation is performed on its contents. The result of the operation is written to the output latch, but since the output buffer is off, the pin status does not change.
The data of the output latch is cleared when a reset signal is generated.

4.4.4 Connecting to external device with different power potential (2.5 V, 3 V)

When parts of port 3 and 7 operate with V_{DD} = 4.0 V to 5.5 V, I/O connections with an external device that operates on a 2.5V or 3 V power supply voltage are possible.

Regarding inputs, CMOS/TTL switching is possible on a bit-by-bit basis by port input mode registers (PIM3 and PIM7).

Moreover, regarding outputs, different power potentials can be supported by switching the output buffer to the N-ch open drain (V_{DD} withstand voltage) by the port output mode registers (POM3 and POM7).

(1) Setting procedure when using I/O pins of UART0[Note 1], UART1, CSI00[Note 2], CSI01[Note 2], and CSI10 functions

(a) Use as 2.5V or 3 V input port

<1> After reset release, the port mode is the input mode (Hi-Z).

<2> If pull-up is needed, externally pull up the pin to be used (on-chip pull-up resistor cannot be used).

In case of UART0[Note 1] :P72 (38-pin products of 78K0R/IC3)
P74 (44-pin and 48-pin products of 78K0R/IC3, 78K0R/ID3 and 78K0R/IE3)
In case of UART1 :P31
In case of CSI00[Note 2] :P74, P75
In case of CSI01[Note 2] :P71, P72
In case of CSI10 :P31, P32

<3> Set the corresponding bit of the PIMn register to 1 to switch to the TTL input buffer.

<4> V_{IH}/V_{IL} operates on a 2.5V or 3 V operating voltage.

Notes 1. In the 78K0R/IB3, UART0 cannot be used to communicate between devices with different power potentials.

2. The 78K0R/IB3 and the 38-pin products of the 78K0R/IC3 doesn't have CSI00 and CSI01.

Remark n = 3 and 7 (78K0R/IB3 : n = 3)

(b) Use as 2.5V or 3 V output port

<1> After reset release, the port mode changes to the input mode (Hi-Z).

<2> Pull up externally the pin to be used (on-chip pull-up resistor cannot be used).

In case of UART0 Note 1 : P73
In case of UART1 : P30
In case of CSI00 Note 2 : P73, P75
In case of CSI01 Note 2 : P70, P72
In case of CSI10 : P30, P32

<3> Set the output latch of the corresponding port to 1.

<4> Set the corresponding bit of the POMn register to 1 to set the N-ch open drain output (V_{DD} withstand voltage) mode.

<5> Set the output mode by manipulating the PMn register.
At this time, the output data is high level, so the pin is in the Hi-Z state.

<6> Operation is done only in the low level according to the operating status of the serial array unit.

Notes 1. In the 78K0R/IB3, UART0 cannot be used to communicate between devices with different power potentials.

2. The 78K0R/IB3 and the 38-pin products of the 78K0R/IC3 doesn't have CSI00 and CSI01.

Remark n = 3 and 7 (78K0R/IB3 : n = 3)

(2) Setting procedure when using I/O pins of simplified IIC10 functions

<1> After reset release, the port mode is the input mode (Hi-Z).

<2> Externally pull up the pin to be used (on-chip pull-up resistor cannot be used).

In case of simplified IIC10: P31, P32

<3> Set the output latch of the corresponding port to 1.

<4> Set the corresponding bit of the POM3 register to 1 to set the N-ch open drain output (V_{DD} withstand voltage) mode.

<5> Set the corresponding bit of the PM3 register to the output mode (data I/O is possible in the output mode).
At this time, the output data is high level, so the pin is in the Hi-Z state.

<6> Enable the operation of the serial array unit and set the mode to the simplified I^2C mode.

4.5 Settings of Port Mode Register and Output Latch When Using Alternate Function

To use the alternate function of a port pin, set the port mode register and output latch as shown in Table 4-9 to Table 4-12.

Table 4-9. Settings of Port Mode Register and Output Latch When Using Alternate Function (78K0R/IB3) (1/2)

Pin Name	Alternate Function	I/O	PIM8	PM××	P××
	Function Name				
P10	TI02	Input	–	1	×
	TO02	Output	–	0	0
	TxD0	Output	–	0	1
P11	TI03	Input	–	1	×
	TO03	Output	–	0	0
	RxD0	Input	–	1	×
P12	TI04	Input	–	1	×
	TO04	Output	–	0	0
P13	TI05	Input	–	1	×
	TO05	Output	–	0	0
P20-P25 Note	ANI0-ANI5 Note	Input	–	1	×
P30	SO10	Output	–	0	1
	TxD1	Output	–	0	1
	TO11	Output	–	0	0
P31	SI10	Input	–	1	×
	RxD1	Input	–	1	×
	SDA10	I/O	–	0	1
	INTP1	Input	–	1	×
	TI09	Input	–	1	×
P32	$\overline{\text{SCK10}}$	Input	–	1	×
		Output	–	0	1
	SCL10	I/O	–	0	1
	INTP2	Input	–	1	×
P40	TOOL0	I/O	–	×	×
P41	TOOL1	Output	–	×	×
P50	TI06	Input	–	1	×
	TO06	Output	–	0	0
P51	TI07	Input	–	1	×
	TO07	Output	–	0	0

Remark ×: don't care
PM××: Port mode register
P××: Port output latch

(**Note** is listed on the next page after next.)

Table 4-9. Settings of Port Mode Register and Output Latch When Using Alternate Function (78K0R/IB3) (2/2)

Pin Name	Alternate Function		PIM8	PM××	P××
	Function Name	I/O			
P80	CMP0P	Input	PIM80 = 0	1	×
	TMOFF0	Input	PIM80 = 1	1	×
	INTP3	Input	PIM80 = 1	1	×
	PGAI	Input	PIM80 = 0	1	×
P81	CMP0M	Input	PIM81 = 0	1	×
P83	CMP1M	Input	PIM83 = 0	1	×
P120	INTP0	Input	–	1	×
	EXLVI	Input	–	1	×

Remark ×: don't care
PM××: Port mode register
P××: Port output latch

Note The function of the ANI0/P20 to ANI5/P25 pins can be selected by using the A/D port configuration register (ADPC), the analog input channel specification register (ADS), PM2.

ADPC	PM2	ADS	ANI0/P20 to ANI5/P25 pins,
Digital I/O selection	Input mode	–	Digital input
	Output mode	–	Digital output
Analog input selection	Input mode	Selects ANI.	Analog input (to be converted)
		Does not select ANI.	Analog input (not to be converted)
	Output mode	Selects ANI.	Setting prohibited
		Does not select ANI.	

Table 4-10. Settings of Port Mode Register and Output Latch When Using Alternate Function (78K0R/IC3) (1/2)

Pin Name	Alternate Function		PIM8	PM××	P××
	Function Name	I/O			
P10	TI02	Input	–	1	×
	TO02	Output	–	0	0
P11	TI03	Input	–	1	×
	TO03	Output	–	0	0
P12	TI04	Input	–	1	×
	TO04	Output	–	0	0
P13	TI05	Input	–	1	×
	TO05	Output	–	0	0
P20-P27 Note 1	ANI0-ANI7 Note 1	Input	–	1	×
P30	SO10	Output	–	0	1
	TxD1	Output	–	0	1
	TO11	Output	–	0	0
P31	SI10	Input	–	1	×
	RxD1	Input	–	1	×
	SDA10	I/O	–	0	1
	INTP1	Input	–	1	×
	TI09	Input	–	1	×
P32	$\overline{\text{SCK10}}$	Input	–	1	×
		Output	–	0	1
	SCL10	I/O	–	0	1
	INTP2	Input	–	1	×
P40	TOOL0	I/O	–	×	×
P41	TOOL1	Output	–	×	×
P50	TI06	Input	–	1	×
	TO06	Output	–	0	0
P51	TI07	Input	–	1	×
	TO07	Output	–	0	0
P52	SLTI	Input	–	1	×
	SLTO	Output	–	0	0
P60 Note 2	SCL0 Note 2	I/O	–	0	0
P61 Note 2	SDA0 Note 2	I/O	–	0	0

Remark ×: don't care
PM××: Port mode register
P××: Port output latch

(**Notes 1** and **2** are listed on the next page after next.)

Table 4-10. Settings of Port Mode Register and Output Latch When Using Alternate Function (78K0R/IC3) (2/2)

Pin Name	Alternate Function		PIM8	PM××	P××
	Function Name	I/O			
P70 Note 3	SO01	Output	–	0	1
	INTP4	Input	–	1	×
P71 Note 3	SI01	Input	–	1	×
	INTP5	Input	–	1	×
P72	$\overline{\text{SCK01}}$ Note 3	Input	–	1	×
		Output	–	0	1
	INTP6	Input	–	1	×
	RxD0 Note 4	Input	–	1	×
P73	SO00 Note 3	Output	–	0	1
	TxD0	Output	–	0	1
	TO10	Output	–	0	0
P74 Note 3	SI00	Input	–	1	×
	RxD0	Input	–	1	×
	TI10	Input	–	1	×
P75 Note 3	$\overline{\text{SCK00}}$	Input	–	1	×
		Output	–	0	1
	TI11	Input	–	1	×
P80	CMP0P	Input	PIM80 = 0	1	×
	TMOFF0	Input	PIM80 = 1	1	×
	INTP3	Input	PIM80 = 1	1	×
	PGAI	Input	PIM80 = 0	1	×
P81	CMP0M	Input	PIM81 = 0	1	×
P82	CMP1P	Input	PIM82 = 0	1	×
	TMOFF1	Input	PIM82 = 1	1	×
	INTP7	Input	PIM82 = 1	1	×
P83	CMP1M	Input	PIM83 = 0	1	×
P120	INTP0	Input	–	1	×
	EXLVI	Input	–	1	×
P121	INTP4 Note 4	Input	–	1	×
P122	INTP5 Note 4	Input	–	1	×
P140 Note 3	PCLBUZ0 Note 2	Output	–	0	0
P150 to P152 Notes 1, 5	ANI8 to ANI10 Notes 1, 5	Input	–	1	×

Remark ×: don't care
PM××: Port mode register
P××: Port output latch

(**Notes 1, 2, 3, 4 and 5** are listed on the next page after next.)

Notes 1. The function of the ANI0/P20 to ANI7/P27, ANI8/P150 to ANI10/P152 pins can be selected by using the A/D port configuration register (ADPC), the analog input channel specification register (ADS), and port mode registers 2, 15 (PM2, PM15).

ADPC Register	PM2 and PM15 Registers	ADS Register	ANI0/P20 to ANI7/P27, ANI8/P150 to ANI10/P152 Pins
Digital I/O selection	Input mode	–	Digital input
	Output mode	–	Digital output
Analog input selection	Input mode	Selects ANI.	Analog input (to be converted)
		Does not select ANI.	Analog input (not to be converted)
	Output mode	Selects ANI.	Setting prohibited
		Does not select ANI.	

Remark ANI0/ P20 to ANI7/P27 (PM20 to PM27) : 38-pin products
ANI0/P20 t0 ANI7/P27, ANI8/P150, ANI9/P151
(PM20 to PM27, PM150, PM151) : 44-pin products
ANI0/P20 to ANI7/P27, ANI8/P150 to ANI10/P152
(PM20 to PM27, PM150, PM152) : 48-pin products

2. 48-pin products only.

3. 44-pin and 48-pin products only.

4. 38-pin products only.

5. P150/ANI8, P151/ANI9 : 44-pin and 48-pin products only.
P152/ANI10 : 48-pin products only.

Table 4-11. Settings of Port Mode Register and Output Latch When Using Alternate Function (78K0R/ID3) (1/2)

Pin Name	Alternate Function		PIM8	PM××	P××
	Function Name	I/O			
P00	TI00	Input	–	1	×
P01	TO00	Output	–	0	0
P10	TI02	Input	–	1	×
	TO02	Output	–	0	0
P11	TI03	Input	–	1	×
	TO03	Output	–	0	0
P12	TI04	Input	–	1	×
	TO04	Output	–	0	0
P13	TI05	Input	–	1	×
	TO05	Output	–	0	0
P20 to P27 Note	ANI0 to ANI7 Note	Input	–	1	×
P30	SO10	Output	–	0	1
	TxD1	Output	–	0	1
	TO11	Output	–	0	0
P31	SI10	Input	–	1	×
	RxD1	Input	–	1	×
	SDA10	I/O	–	0	1
	INTP1	Input	–	1	×
	TI09	Input	–	1	×
P32	$\overline{\text{SCK10}}$	Input	–	1	×
		Output	–	0	1
	SCL10	I/O	–	0	1
	INTP2	Input	–	1	×
P40	TOOL0	I/O	–	×	×
P41	TOOL1	Output	–	×	×
P50	TI06	Input	–	1	×
	TO06	Output	–	0	0
P51	TI07	Input	–	1	×
	TO07	Output	–	0	0
P52	SLTI	Input	–	1	×
	SLTO	Output	–	0	0
P60	SCL0	I/O	–	0	0
P61	SDA0	I/O	–	0	0

Remark ×: don't care
PM××: Port mode register
P××: Port output latch

(**Note** is listed on the next page after next.)

Table 4-11. Settings of Port Mode Register and Output Latch When Using Alternate Function (78K0R/ID3) (2/2)

Pin Name	Alternate Function		PIM8	PM××	P××
	Function Name	I/O			
P70	SO01	Output	–	0	1
	INTP4	Input	–	1	×
P71	SI01	Input	–	1	×
	INTP5	Input	–	1	×
P72	$\overline{\text{SCK01}}$	Input	–	1	×
		Output	–	0	1
	INTP6	Input	–	1	×
P73	SO00	Output	–	0	1
	TxD0	Output	–	0	1
	TO10	Output	–	0	0
P74	SI00	Input	–	1	×
	RxD0	Input	–	1	×
	TI10	Input	–	1	×
P75	$\overline{\text{SCK00}}$	Input	–	1	×
		Output	–	0	1
	TI11	Input	–	1	×
P80	CMP0P	Input	PIM80 = 0	1	×
	TMOFF0	Input	PIM80 = 1	1	×
	INTP3	Input	PIM80 = 1	1	×
	PGAI	Input	PIM80 = 0	1	×
P81	CMP0M	Input	PIM81 = 0	1	×
P82	CMP1P	Input	PIM82 = 0	1	×
	TMOFF1	Input	PIM82 = 1	1	×
	INTP7	Input	PIM82 = 1	1	×
P83	CMP1M	Input	PIM83 = 0	1	×
P120	INTP0	Input	–	1	×
	EXLVI	Input	–	1	×
P140	PCLBUZ0	Output	–	0	0
P150 to P152 Note	ANI8 to ANI10 Note	Input	–	1	×

Remark ×: don't care
PM××: Port mode register
P××: Port output latch

(**Note** is listed on the next page.)

Note The function of the ANI0/P20 to ANI7/P27, ANI8/P150 to ANI10/P152 pins can be selected by using the A/D port configuration register (ADPC), the analog input channel specification register (ADS), and port mode registers 2, 15 (PM2, PM15).

ADPC Register	PM2 and PM15 Registers	ADS Register	ANI0/P20 to ANI7/P27, ANI8/P150 to ANI10/P152 Pins
Digital I/O selection	Input mode	–	Digital input
	Output mode	–	Digital output
Analog input selection	Input mode	Selects ANI.	Analog input (to be converted)
		Does not select ANI.	Analog input (not to be converted)
	Output mode	Selects ANI.	Setting prohibited
		Does not select ANI.	

Table 4-12. Settings of Port Mode Register and Output Latch When Using Alternate Function (78K0R/IE3) (1/2)

Pin Name	Alternate Function		PIM8	PM××	P××
	Function Name	I/O			
P00	TI00	Input	–	1	×
P01	TO00	Output	–	0	0
P10	TI02	Input	–	1	×
	TO02	Output	–	0	0
P11	TI03	Input	–	1	×
	TO03	Output	–	0	0
P12	TI04	Input	–	1	×
	TO04	Output	–	0	0
P13	TI05	Input	–	1	×
	TO05	Output	–	0	0
P14	TI06	Input	–	1	×
	TO06	Output	–	0	0
P15	TI07	Input	–	1	×
	TO07	Output	–	0	0
P16	TI08	Input	–	1	×
	TO08	Output	–	0	0
P17	TI09	Input	–	1	×
	TO09	Output	–	0	0
P20 to P27[Note]	ANI0 to ANI7[Note]	Input	–	1	×
P30	SO10	Output	–	0	1
	TxD1	Output	–	0	1
	TO11	Output	–	0	0
P31	SI10	Input	–	1	×
	RxD1	Input	–	1	×
	SDA10	I/O	–	0	1
	INTP1	Input	–	1	×
P32	$\overline{\text{SCK10}}$	Input	–	1	×
		Output	–	0	1
	SCL10	I/O	–	0	1
	INTP2	Input	–	1	×
P40	TOOL0	I/O	–	×	×
P41	TOOL1	Output	–	×	×

Remark ×: don't care
PM××: Port mode register
P××: Port output latch

(**Note** is listed on the next page after next.)

Table 4-12. Settings of Port Mode Register and Output Latch When Using Alternate Function (78K0R/IE3) (2/2)

Pin Name	Alternate Function		PIM8	PM××	P××
	Function Name	I/O			
P52	SLTI	Input	–	1	×
	SLTO	Output	–	0	0
P60	SCL0	I/O	–	0	0
P61	SDA0	I/O	–	0	0
P70	SO01	Output	–	0	1
	INTP4	Input	–	1	×
P71	SI01	Input	–	1	×
	INTP5	Input	–	1	×
P72	$\overline{\text{SCK01}}$	Input	–	1	×
		Output	–	0	1
	INTP6	Input	–	1	×
P73	SO00	Output	–	0	1
	TxD0	Output	–	0	1
	TO10	Output	–	0	0
P74	SI00	Input	–	1	×
	RxD0	Input	–	1	×
	TI10	Input	–	1	×
P75	$\overline{\text{SCK00}}$	Input	–	1	×
		Output	–	0	1
	TI11	Input	–	1	×
P80	CMP0P	Input	PIM80 = 0	1	×
	TMOFF0	Input	PIM80 = 1	1	×
	INTP3	Input	PIM80 = 1	1	×
	PGAI	Input	PIM80 = 0	1	×
P81	CMP0M	Input	PIM81 = 0	1	×
P82	CMP1P	Input	PIM82 = 0	1	×
	TMOFF1	Input	PIM82 = 1	1	×
	INTP7	Input	PIM82 = 1	1	×
P83	CMP1M	Input	PIM83 = 0	1	×
P120	INTP0	Input	–	1	×
	EXLVI	Input	–	1	×
P140	PCLBUZ0	Output	–	0	0
P141	PCLBUZ1	Output	–	0	0
P150 to P153 Note	ANI8 to ANI11 Note	Input	–	1	×

Remark ×: don't care
PM××: Port mode register
P××: Port output latch

(**Note** is listed on the next page.)

Note The function of the ANI0/P20 to ANI7/P27, ANI8/P150 to ANI11/P153 pins can be selected by using the A/D port configuration register (ADPC), the analog input channel specification register (ADS), PM2, PM15.

ADPC	PM2, PM15	ADS	ANI0/P20 to ANI7/P27, ANI8/P150 to ANI11/P153 pins
Digital I/O selection	Input mode	–	Digital input
	Output mode	–	Digital output
Analog input selection	Input mode	Selects ANI.	Analog input (to be converted)
		Does not select ANI.	Analog input (not to be converted)
	Output mode	Selects ANI.	Setting prohibited
		Does not select ANI.	

4.6 Cautions on 1-bit Manipulation Instruction for Port Register n (Pn)

When a 1-bit manipulation instruction is executed on a port in which even one pin is set to input mode, the output latch value of an input port that is not subject to manipulation may be written in addition to the targeted bit.

Therefore, it is recommended to rewrite the output latch when switching a port from input mode to output mode.

<Example> When P10 is an output port, P11 to P17 are input ports (all pin statuses are high level), and the port latch value of port 1 is 00H, if the output of output port P10 is changed from low level to high level via a 1-bit manipulation instruction, the output latch value of port 1 is FFH.

Explanation: The targets of writing to and reading from the Pn register of a port whose PMnm bit is 1 are the output latch and pin status, respectively.

A 1-bit manipulation instruction is executed in the following order in the 78K0R/Ix3.

<1> The Pn register is read in 8-bit units.
<2> The targeted one bit is manipulated.
<3> The Pn register is written in 8-bit units.

In step <1>, the output latch value (0) of P10, which is an output port, is read, while the pin statuses of P11 to P17, which are input ports, are read. If the pin statuses of P11 to P17 are high level at this time, the read value is FEH.

The value is changed to FFH by the manipulation in <2>.

FFH is written to the output latch by the manipulation in <3>.

Figure 4-44. Bit Manipulation Instruction (P10)

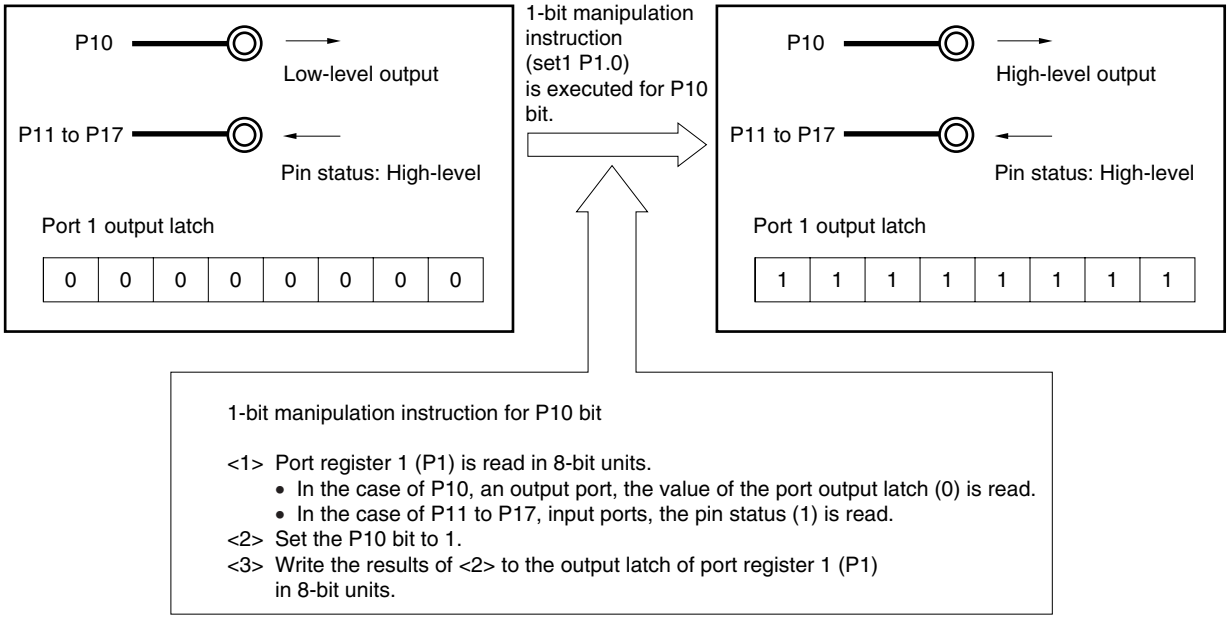

CHAPTER 5 CLOCK GENERATOR

5.1 Functions of Clock Generator

The clock generator generates the clock to be supplied to the CPU and peripheral hardware.
The following three kinds of system clocks and clock oscillators are selectable.

(1) Main system clock

<1> X1 oscillator

This circuit oscillates a clock of f_X = 2 to 20 MHz by connecting a resonator to X1 and X2.
Oscillation can be stopped by executing the STOP instruction or setting of MSTOP (bit 7 of the clock operation status control register (CSC)).

<2> Internal high-speed oscillator

This circuit oscillates clocks of f_{IH} = 8 MHz (TYP.). After a reset release, the CPU always starts operating with this internal high-speed oscillation clock. Oscillation can be stopped by executing the STOP instruction or setting HIOSTOP (bit 0 of CSC).

<3> 40 MHz internal high-speed oscillator

This circuit oscillates a clock of f_{IH40} = 40 MHz (TYP.). Oscillation can be started by setting bit 0 (DSCON) of the 40 MHz internal high-speed oscillation control register (DSCCTL) to 1. Oscillation can be stopped by setting DSCON to 0.
After a reset release, the 8 MHz internal high-speed oscillator starts oscillating automatically. Afterward, the 40 MHz internal high-speed oscillator starts oscillating when the DSCON bit of the DSCCTL register has been set to 1.

An external main system clock (f_{EX} = 2 to 20 MHz) can also be supplied from the EXCLK/X2/P122 pin. An external main system clock input can be disabled by executing the STOP instruction or setting of MSTOP.
As the main system clock, a high-speed system clock (X1 clock or external main system clock) or internal high-speed oscillation clock can be selected by setting of MCM0 (bit 4 of the system clock control register (CKC)).
Furthermore, the 40 MHz high-speed oscillation clock can be selected by setting SELDSC (bit 2 of the 40 MHz high-speed oscillation control register (DSCCTL)).

(2) Subsystem clock[Note]

- **XT1 clock oscillator**

  This circuit oscillates a clock of f_{SUB} = 32.768 kHz by connecting a 32.768 kHz resonator to XT1 and XT2.
  Oscillation can be stopped by setting XTSTOP (bit 6 of CSC).

Remark f_X: X1 clock oscillation frequency
f_{IH}: Internal high-speed oscillation clock frequency
f_{IH40}: 40 MHz internal high-speed oscillation clock frequency
f_{EX}: External main system clock frequency
f_{SUB}: Subsystem clock frequency

(3) Internal low-speed oscillation clock (clock dedicated to watchdog timer)

- **Internal low-speed oscillator**

  This circuit oscillates a clock of f_{IL} = 30 kHz (TYP.).

  The internal low-speed oscillation clock cannot be used as the CPU clock. The only hardware that operates with the internal low-speed oscillation clock is the watchdog timer.

  Oscillation is stopped when the watchdog timer stops.

Note The 78K0R/IB3 doesn't have the subsystem clock.

Remarks 1. f_{IL}: Internal low-speed oscillation clock frequency

2. The watchdog timer stops in the following cases.

- When bit 4 (WDTON) of an option byte (000C0H) = 0
- If the HALT or STOP instruction is executed when bit 4 (WDTON) of an option byte (000C0H) = 1 and bit 0 (WDSTBYON) = 0

5.2 Configuration of Clock Generator

The clock generator includes the following hardware.

Table 5-1. Configuration of Clock Generator

Item	Configuration
Control registers	Clock operation mode control register (CMC) System clock control register (CKC) Clock operation status control register (CSC) Oscillation stabilization time counter status register (OSTC) Oscillation stabilization time select register (OSTS) 40 MHz high-speed oscillation control register (DSCCTL) Peripheral enable registers 0, 1, 2 (PER0, PER1, PER2) Operation speed mode control register (OSMC)
Oscillators	X1 oscillator XT1 oscillator[Note] Internal high-speed oscillator Internal low-speed oscillator

Note The 78K0R/IB3 doesn't have the XT1 oscillator.

Figure 5-1. Block Diagram of Clock Generator (78K0R/IC3, 78K0R/ID3, 78K0R/IE3)

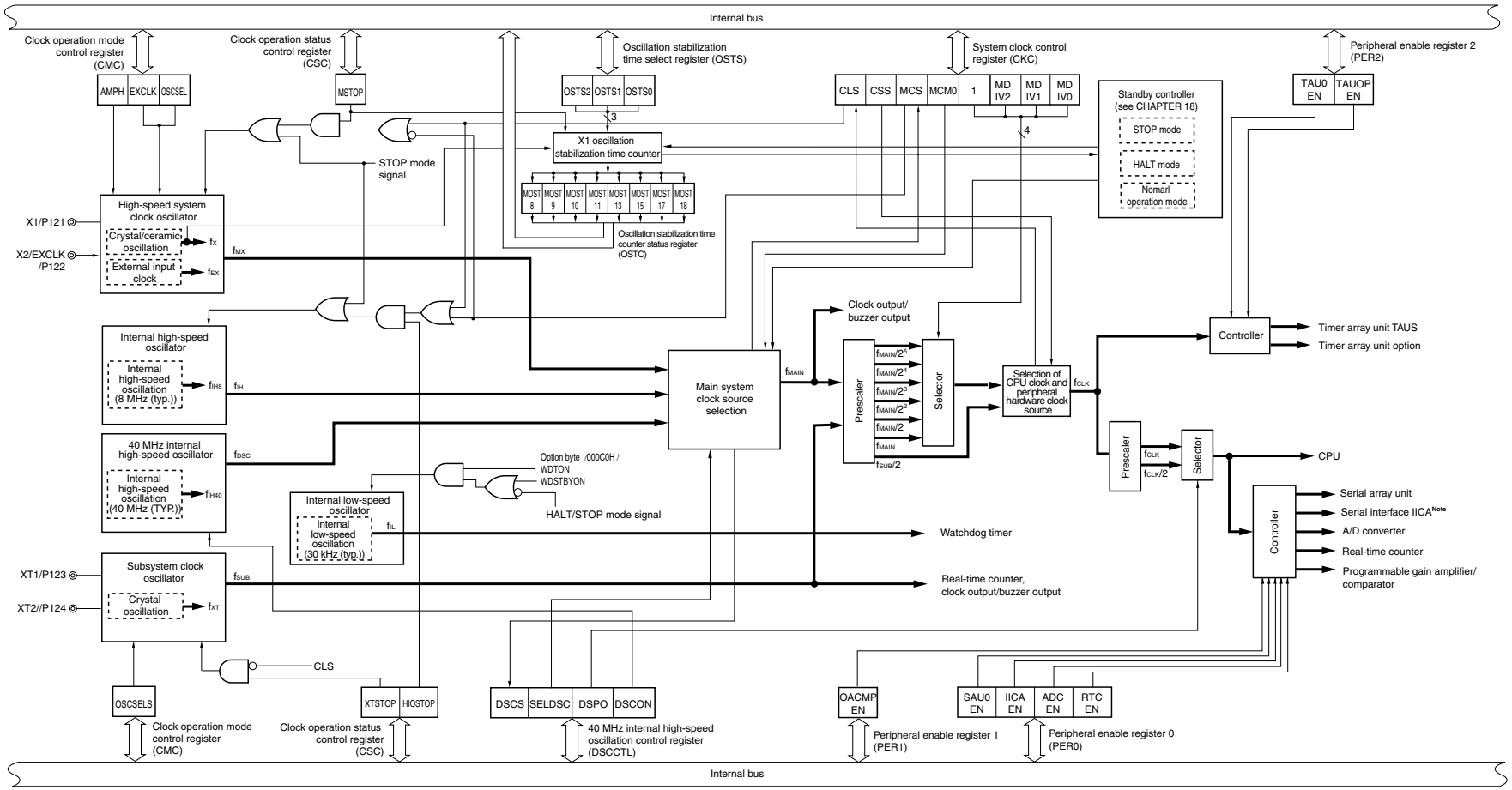

Note 48-pin products of 78K0R/IC3, 78K0R/ID3 and 78K0R/IE3 only.

Figure 5-2. Block Diagram of Clock Generator (78K0R/IB3)

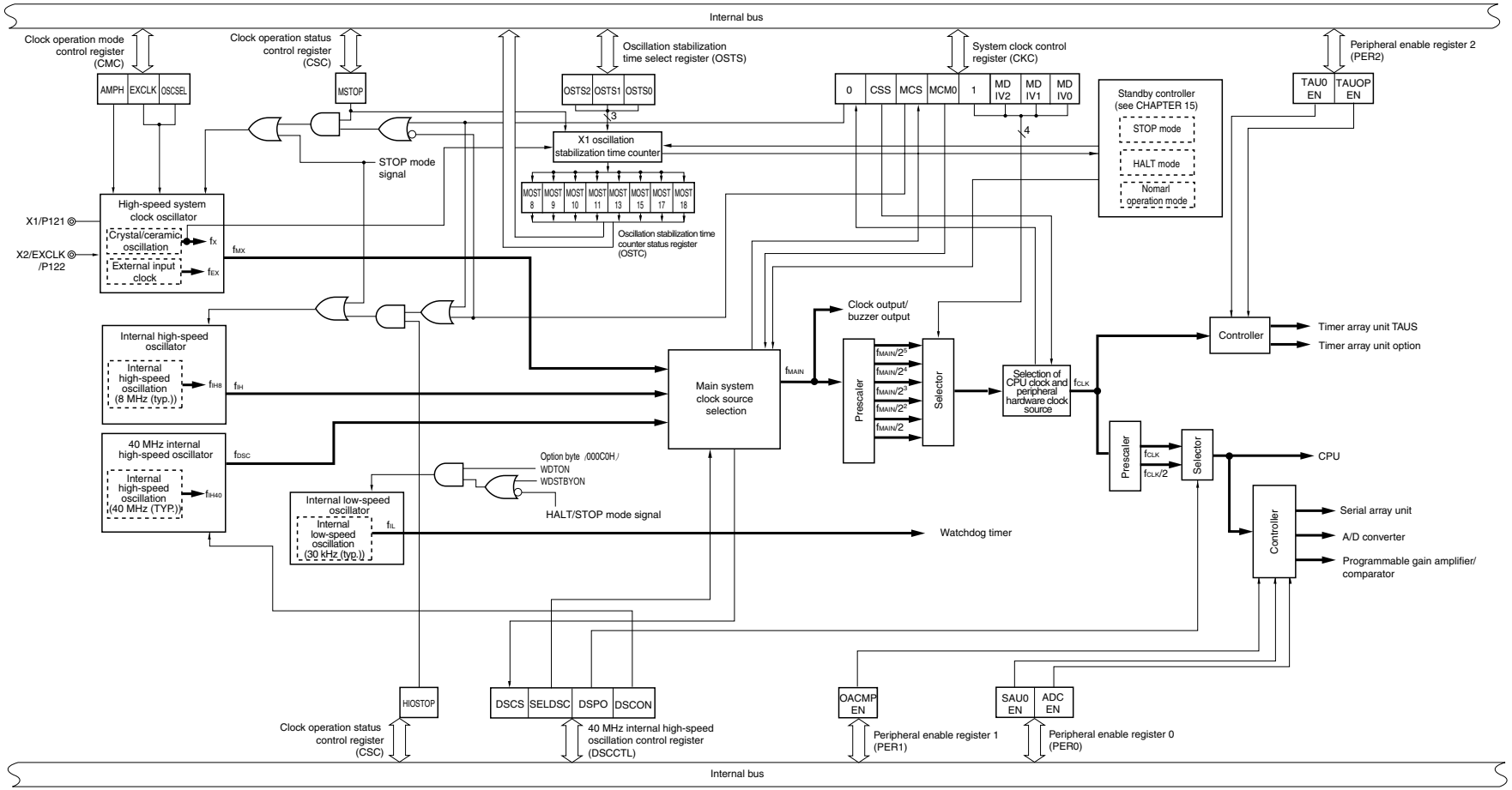

Remark f_X: X1 clock oscillation frequency
f_{IH}: Internal high-speed oscillation clock frequency
f_{IH40}: 40 MHz internal high-speed oscillation clock frequency
f_{EX}: External main system clock frequency
f_{MX}: High-speed system clock frequency
f_{MAIN}: Main system clock frequency
f_{XT}: XT1 clock oscillation frequency
f_{SUB}: Subsystem clock frequency
f_{CLK}: CPU/peripheral hardware clock frequency
f_{IL}: Internal low-speed oscillation clock frequency

5.3 Registers Controlling Clock Generator

The following eight registers are used to control the clock generator.

- Clock operation mode control register (CMC)
- System clock control register (CKC)
- Clock operation status control register (CSC)
- Oscillation stabilization time counter status register (OSTC)
- Oscillation stabilization time select register (OSTS)
- 40 MHz internal high-speed oscillation control register (DSCCTL)
- Peripheral enable registers 0, 1, 2 (PER0, PER1, PER2)
- Operation speed mode control register (OSMC)

(1) Clock operation mode control register (CMC)

This register is used to set the operation mode of the X1/P121, X2/EXCLK/P122, XT1/P123, and XT2/P124[Note] pins, and to select a gain of the oscillator.

CMC can be written only once by an 8-bit memory manipulation instruction after reset release. This register can be read by a 1-bit or 8-bit memory manipulation instruction.

Reset signal generation clears this register to 00H.

Note The 78K0R/IB3 doesn't have the XT1 and XT2 oscillator.

Figure 5-3. Format of Clock Operation Mode Control Register (CMC)

Address: FFFA0H After reset: 00H R/W

Symbol	7	6	5	4	3	2	1	0
CMC	EXCLK	OSCSEL	0	OSCSELS Note	0	0	0	AMPH

EXCLK	OSCSEL	High-speed system clock pin operation mode	X1/P121 pin	X2/EXCLK/P122 pin
0	0	Input port mode	Input port	
0	1	X1 oscillation mode	Crystal/ceramic resonator connection	
1	0	Input port mode	Input port	
1	1	External clock input mode	Input port	External clock input

OSCSELS Note	Subsystem clock pin operation mode	XT1/P123 pin	XT2/P124 pin
0	Input port mode	Input port	
1	XT1 oscillation mode	Crystal resonator connection	

AMPH	Control of high-speed system clock oscillation frequency
0	2 MHz ≤ f_{MX} ≤ 10 MHz
1	10 MHz < f_{MX} ≤ 20 MHz

Note OSCSELS bit is not provided in the 78K0R/IB3. In the 78K0R/IB3, bit 4 is fixed to 0.

Cautions 1. CMC can be written only once after reset release, by an 8-bit memory manipulation instruction.

2. After reset release, set CMC before X1 or XT1 oscillation is started as set by the clock operation status control register (CSC).

3. Be sure to set AMPH to 1 if the X1 clock oscillation frequency exceeds 10 MHz.

4. When CMC is used at the default value (00H), be sure to set 00H to this register after reset release in order to prevent malfunctioning during a program loop.

5. The XT1 oscillator is a circuit with low amplification in order to achieve low-power consumption. Note the following points when designing the circuit.

- **Pins and circuit boards include parasitic capacitance. Therefore, perform oscillation evaluation using a circuit board to be actually used and confirm that there are no problems.**
- **Configure the circuit of the circuit board, using material with little wiring resistance.**
- **Place a ground pattern that has the same potential as V_{SS} as much as possible near the XT1 oscillator.**
- **Be sure that the signal lines between the XT1 and XT2 pins, and the resonators do not cross with the other signal lines. Do not route the wiring near a signal line through which a high fluctuating current flows.**

(**Caution** and **Remark** are given on the next page.)

- **The impedance between the XT1 and XT2 pins may drop and oscillation may be disturbed due to moisture absorption of the circuit board in a high-humidity environment or dew condensation on the board. When using the circuit board in such an environment, take measures to damp-proof the circuit board, such as by coating.**
- **When coating the circuit board, use material that does not cause capacitance or leakage between the XT1 and XT2 pins.**

Remark f_{MX}: High-speed system clock frequency

(2) System clock control register (CKC)

This register is used to select a CPU/peripheral hardware clock and a division ratio.

CKC can be set by a 1-bit or 8-bit memory manipulation instruction.

Reset signal generation sets this register to 09H.

Figure 5-4. Format of System Clock Control Register (CKC)

Address: FFFA4H After reset: 09H R/W[Note 1]

Symbol	<7>	<6>	<5>	<4>	3	2	1	0
CKC	CLS[Note 2]	CSS	MCS	MCM0	1	MDIV2	MDIV1	MDIV0

CLS[Note 2]	Status of CPU/peripheral hardware clock (f_{CLK})
0	Main system clock (f_{MAIN})
1	Subsystem clock divided by 2 (f_{SUB}/2)

MCS	Status of Main system clock (f_{MAIN})
0	Internal high-speed oscillation clock (f_{IH}) or 40 MHz internal high-speed oscillation clock (f_{IH40})
1	High-speed system clock (f_{MX})

MCM0	Main system clock (f_{MAIN}) operation control
0	Selects the internal high-speed oscillation clock (f_{IH}) or 40 MHz internal high-speed oscillation clock (f_{IH40}) as the main system clock (f_{MAIN})
1	Selects the internal high-speed oscillation clock (f_{MX}) as the main system clock (f_{MAIN})

CSS	MDIV2	MDIV1	MDIV0	Selection of CPU/peripheral hardware clock (f_{CLK})
0	0	0	0	f_{MAIN}
	0	0	1	f_{MAIN} /2 (This is the default setting if MCM0 = 0.)
	0	1	0	f_{MAIN} /2^2
	0	1	1	f_{MAIN} /2^3
	1	0	0	f_{MAIN} /2^4
	1	0	1	f_{MAIN} /2^5 [Note 3]
1[Note 4]	×	×	×	f_{SUB} /2
Other than above				Setting prohibited

Notes 1. Bits 7 and 5 are read-only.

2. CLS bit is provided in the 78K0R/IB3. In the 78K0R/IB3, bit 7 is fixed to 0.

3. Setting is prohibited if the high-speed system clock (f_{MX}) is selected as the main system clock (f_{MAIN}) and if f_{MX} < 4 MHz.

4. Changing the value of the MCM0 bit is prohibited while CSS is set to 1.

Remarks 1. f_{IH}: Internal high-speed oscillation clock frequency

f_{IH40}: 40 MHz internal high-speed oscillation clock

f_{MX}: High-speed system clock frequency

f_{SUB}: Subsystem clock frequency

2. ×: don't care

(Cautions 1 to 3 are given on the next page.)

Cautions 1. Be sure to set bit 3 to 1.

2. The clock set by CSS, MCM0, and MDIV2 to MDIV0 is supplied to the CPU and peripheral hardware. If the CPU clock is changed, therefore, the clock supplied to peripheral hardware (except the real-time counter, clock output/buzzer output, and watchdog timer) is also changed at the same time. Consequently, stop each peripheral function when changing the CPU/peripheral operating hardware clock.

3. If the peripheral hardware clock is used as the subsystem clock, the operations of the A/D converter and IICA are not guaranteed. For the operating characteristics of the peripheral hardware, refer to the chapters describing the various peripheral hardware as well as CHAPTER 28 ELECTRICAL SPECIFICATIONS.

The fastest instruction can be executed in 1 clock of the CPU clock in the 78K0R/Ix3. Therefore, the relationship between the CPU clock (f_{CLK}) and the minimum instruction execution time is as shown in Table 5-2.

Table 5-2. Relationship Between CPU Clock and Minimum Instruction Execution Time

CPU Clock (Value set by the MDIV2 to MDIV0 bits)	Minimum Instruction Execution Time: $1/f_{CLK}$				
	Main System Clock (CSS = 0)				Subsystem Clock Note 1 (CSS = 1)
	High-Speed System Clock (MCM0 = 1)		Internal High-Speed Oscillation Clock (MCM0 = 0)		
	At 10 MHz Operation	At 20 MHz Operation	At 8 MHz (TYP.) Operation	At 40 MHz (TYP.) Operation	At 32.768 kHz Operation
f_{MAIN}	0.1 μs	0.05 μs	0.125 μs (TYP.)	0.05 μs (TYP.) Note 2	–
$f_{MAIN}/2$	0.2 μs	0.1 μs	0.25 μs (TYP.) (default)	0.05 μs (TYP.)	–
$f_{MAIN}/2^2$	0.4 μs	0.2 μs	0.5 μs (TYP.)	0.1 μs (TYP.)	–
$f_{MAIN}/2^3$	0.8 μs	0.4 μs	1.0 μs (TYP.)	0.2 μs (TYP.)	–
$f_{MAIN}/2^4$	1.6 μs	0.8 μs	2.0 μs (TYP.)	0.4 μs (TYP.)	–
$f_{MAIN}/2^5$	3.2 μs	1.6 μs	4.0 μs (TYP.)	0.8 μs (TYP.)	–
$f_{SUB}/2$	–		–		61 μs

Notes 1. The 78K0R/IB3 doesn't have the subsystem clock.

2. f_{MAIN} at 40 MHz can be used as f_{CLK} only for the timer array unit TAUS and controlling the inverter. In this case, $f_{CLK}/2$ (20 MHz) is specified for the CPU clock by setting the DSPO bit of the DSCCTL register to 1.

Remark f_{MAIN}: Main system clock frequency (f_{IH}, f_{IH40} or f_{MX})

f_{SUB}: Subsystem clock frequency

(3) Clock operation status control register (CSC)

This register is used to control the operations of the high-speed system clock[Note], internal high-speed oscillation clock, and subsystem clock (except the 40 MHz internal high-speed oscillation clock and internal low-speed oscillation clock).

CSC can be set by a 1-bit or 8-bit memory manipulation instruction.

Reset signal generation sets this register to C0H.

Note The 78K0R/IB3 doesn't have the subsystem clock.

Figure 5-5. Format of Clock Operation Status Control Register (CSC)

Address: FFFA1H After reset: C0H R/W

Symbol	<7>	<6>	5	4	3	2	1	<0>
CSC	MSTOP	XTSTOP[Note 1]	0	0	0	0	0	HIOSTOP

MSTOP	High-speed system clock operation control		
	X1 oscillation mode	External clock input mode	Input port mode
0	X1 oscillator operating	External clock from EXCLK pin is valid	Input port
1	X1 oscillator stopped	External clock from EXCLK pin is invalid	

XTSTOP[Note 1]	Subsystem clock operation control	
	XT1 oscillation mode	Input port mode
0	XT1 oscillator operating	Input port
1	XT1 oscillator stopped	

HIOSTOP	Internal high-speed oscillation clock operation control
0	Internal high-speed oscillator operating
1	Internal high-speed oscillator stopped [Note 2]

Notes 1. XTSTOP bit is not provided in the 78K0R/IB3. In the 78K0R/IB3, bit 6 is fixed to 0.

2. The 8 MHz (TYP.) internal high-speed oscillation clock stops. Stopping the internal high-speed oscillator (HIOSTOP = 1) is prohibited while the 40 MHz internal high-speed oscillation clock is operating (DSCON = 1). Stop the 40 MHz internal high-speed oscillation clock by using the 40 MHz internal high-speed oscillation control register (DSCCTL) and not the HIOSTOP bit.

Cautions 1. After reset release, set the clock operation mode control register (CMC) before setting CSC.

2. To start X1 oscillation as set by MSTOP, check the oscillation stabilization time of the X1 clock by using the oscillation stabilization time counter status register (OSTC).

3. When starting XT1 oscillation by setting the XSTOP bit, wait for oscillation of the subsystem clock to stabilize by setting a wait time using software.

4. Do not stop the clock selected for the CPU peripheral hardware clock (f_{CLK}) with the OSC register.

5. The setting of the flags of the register to stop clock oscillation (invalidate the external clock input) and the condition before clock oscillation is to be stopped are as Table 5-3.

6. Set the oscillation stabilization time select register (OSTS) before setting the MSTOP bit to 0 after releasing reset. Note that if the OSTS register is being used with its default settings, the OSTS register is not required to be set here.

Table 5-3. Condition Before Stopping Clock Oscillation and Flag Setting

Clock	Condition Before Stopping Clock (Invalidating External Clock Input)	Setting of CSC Register Flags
X1 clock	CPU and peripheral hardware clocks operate with a clock other than the high-speed system clock. (CLS = 0 and MCS = 0, or CLS = 1)	MSTOP = 1
External main system clock		
Subsystem clock Note	CPU and peripheral hardware clocks operate with a clock other than the subsystem clock. (CLS = 0)	XTSTOP = 1
Internal high-speed oscillation clock	CPU and peripheral hardware clocks operate with a clock other than the internal high-speed oscillator clock and 40 MHz internal high-speed oscillation clock. (CLS = 0 and MCS = 1, or CLS = 1)	HIOSTOP = 1

Note The 78K0R/IB3 doesn't have the subsystem clock.

(4) Oscillation stabilization time counter status register (OSTC)

This is the register that indicates the count status of the X1 clock oscillation stabilization time counter.

The X1 clock oscillation stabilization time can be checked in the following case,

- If the X1 clock starts oscillation while the internal high-speed oscillation clock or subsystem clock is being used as the CPU clock.
- If the STOP mode is entered and then released while the internal high-speed oscillation clock is being used as the CPU clock with the X1 clock oscillating.

OSTC can be read by a 1-bit or 8-bit memory manipulation instruction.

When reset signal is generated, the STOP instruction and MSTOP (bit 7 of CSC register) = 1 clear OSTC to 00H.

Remark The oscillation stabilization time counter starts counting in the following cases.

- When oscillation of the X1 clock starts (EXCLK, OSCSEL = 0, 1 → MSTOP = 0)
- When the STOP mode is released

Figure 5-6. Format of Oscillation Stabilization Time Counter Status Register (OSTC)

Address: FFFA2H After reset: 00H R

Symbol	7	6	5	4	3	2	1	0
OSTC	MOST 8	MOST 9	MOST 10	MOST 11	MOST 13	MOST 15	MOST 17	MOST 18

MOST 8	MOST 9	MOST 10	MOST 11	MOST 13	MOST 15	MOST 17	MOST 18	Oscillation stabilization time status		
									f_X = 10 MHz	f_X = 20 MHz
0	0	0	0	0	0	0	0	$2^9/f_X$ max.	25.6 μs max.	12.8 μs max.
1	0	0	0	0	0	0	0	$2^8/f_X$ min.	25.6 μs min.	12.8 μs min.
1	1	0	0	0	0	0	0	$2^9/f_X$ min.	51.2 μs min.	25.6 μs min.
1	1	1	0	0	0	0	0	$2^{10}/f_X$ min.	102.4 μs min.	51.2 μs min.
1	1	1	1	0	0	0	0	$2^{11}/f_X$ min.	204.8 μs min.	102.4 μs min.
1	1	1	1	1	0	0	0	$2^{13}/f_X$ min.	819.2 μs min.	409.6 μs min.
1	1	1	1	1	1	0	0	$2^{15}/f_X$ min.	3.27 ms min.	1.64 ms min.
1	1	1	1	1	1	1	0	$2^{17}/f_X$ min.	13.11 ms min.	6.55 ms min.
1	1	1	1	1	1	1	1	$2^{18}/f_X$ min.	26.21 ms min.	13.11 ms min.

Cautions 1. After the above time has elapsed, the bits are set to 1 in order from MOST8 and remain 1.

2. The oscillation stabilization time counter counts up to the oscillation stabilization time set by OSTS.
In the following cases, set the oscillation stabilization time of OSTS to the value greater than the count value which is to be checked by the OSTC register after the oscillation starts.

- **If the X1 clock starts oscillation while the internal high-speed oscillation clock or subsystem clock is being used as the CPU clock.**
- **If the STOP mode is entered and then released while the internal high-speed oscillation clock is being used as the CPU clock with the X1 clock oscillating. (Note, therefore, that only the status up to the oscillation stabilization time set by OSTS is set to OSTC after the STOP mode is released.)**

3. The X1 clock oscillation stabilization wait time does not include the time until clock oscillation starts ("a" below).

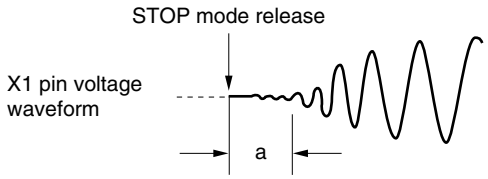

Remark f_X: X1 clock oscillation frequency

(5) Oscillation stabilization time select register (OSTS)

This register is used to select the X1 clock oscillation stabilization wait time when the STOP mode is released.

When the X1 clock is selected as the CPU clock, the operation automatically waits for the time set using OSTS after the STOP mode is released.

When the internal high-speed oscillation clock is selected as the CPU clock, confirm with OSTC that the desired oscillation stabilization time has elapsed after the STOP mode is released. The oscillation stabilization time can be checked up to the time set using OSTC.

OSTS can be set by an 8-bit memory manipulation instruction.

Reset signal generation sets OSTS to 07H.

Figure 5-7. Format of Oscillation Stabilization Time Select Register (OSTS)

Address: FFFA3H After reset: 07H R/W

Symbol	7	6	5	4	3	2	1	0
OSTS	0	0	0	0	0	OSTS2	OSTS1	OSTS0

OSTS2	OSTS1	OSTS0	Oscillation stabilization time selection		
				fx = 10 MHz	fx = 20 MHz
0	0	0	2^8/fx	25.6 μs	Setting prohibited
0	0	1	2^9/fx	51.2 μs	25.6 μs
0	1	0	2^{10}/fx	102.4 μs	51.2 μs
0	1	1	2^{11}/fx	204.8 μs	102.4 μs
1	0	0	2^{13}/fx	819.2 μs	409.6 μs
1	0	1	2^{15}/fx	3.27 ms	1.64 ms
1	1	0	2^{17}/fx	13.11 ms	6.55 ms
1	1	1	2^{18}/fx	26.21 ms	13.11 ms

Cautions 1. To set the STOP mode when the X1 clock is used as the CPU clock, set the OSTS register before executing the STOP instruction.

2. Setting the oscillation stabilization time to 20 μs or less is prohibited.

3. Change the setting of the OSTS register before setting the MSTOP bit of the clock operation status control register (CSC) to 0.

4. Do not change the value of the OSTS register during the X1 clock oscillation stabilization time.

5. The oscillation stabilization time counter counts up to the oscillation stabilization time set by OSTS.
In the following cases, set the oscillation stabilization time of OSTS to the value greater than the count value which is to be checked by the OSTC register after the oscillation starts.

- **If the X1 clock starts oscillation while the internal high-speed oscillation clock or subsystem clock is being used as the CPU clock.**
- **If the STOP mode is entered and then released while the internal high-speed oscillation clock is being used as the CPU clock with the X1 clock oscillating. (Note, therefore, that only the status up to the oscillation stabilization time set by OSTS is set to OSTC after the STOP mode is released.)**

6. The X1 clock oscillation stabilization wait time does not include the time until clock oscillation starts ("a" below).

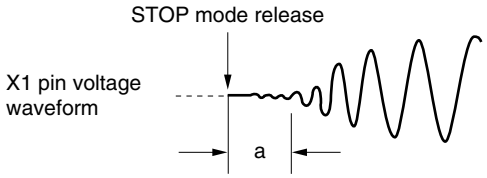

Remark fx: X1 clock oscillation frequency

(6) 40 MHz internal high-speed oscillation control register (DSCCTL)

This register controls the 40 MHz internal high-speed oscillation clock (DSC) function.

This register can be used to control oscillation of the 40 MHz internal high-speed oscillation clock (f_{IH40}) and select the 40 MHz internal high-speed oscillation clock (f_{IH40}) as the CPU/peripheral hardware clock.

DSCCTL can be set by a 1-bit manipulation instruction.

Reset signal generation clears this register to 00H.

Figure 5-8. Format of 40 MHz Internal High-speed Oscillation Control Register (DSCCTL)

Address: F00F6H After reset: 00H R/W[Note]

Symbol	7	6	5	4	3	2	1	0
DSCCTL	0	0	0	0	DSCS	SELDSC	DSPO	DSCON

DSCS	40 MHz internal high-speed oscillation supply status flag
0	Not supplied
1	Supplied (The CPU/peripheral hardware clock (f_{CLK}) operates on the 40 MHz internal high-speed oscillation clock.)

SELDSC	Selection of 40 MHz internal high-speed oscillation for CPU/peripheral hardware clock (f_{CLK})
0	Does not select 40 MHz internal high-speed oscillation (clock selected by the system clock control register (CKC) is supplied to f_{CLK})
1	Selects 40 MHz internal high-speed oscillation (40 MHz internal high-speed oscillation is supplied to f_{CLK})

DSPO	40 MHz operation selection bit
0	Other than when f_{CLK} = 40 MHz (TYP.)
1	When f_{CLK} = 40 MHz (TYP.) (Supplies a clock of f_{CLK} to peripheral hardware supporting 40 MHz and supplies a clock of $f_{CLK}/2$ to a CPU or peripheral hardware not supporting 40 MHz.)

DSCON	Operating or stopping 40 MHz internal high-speed oscillation clock (f_{IH40})
0	Stopped
1	Operating

Note Bit 3 is read-only.

Cautions 1. Set the DSCON bit when V_{DD} ≥ 2.7 V, set the DSPO bit when 100 μs have elapsed, and then set the SELDSC bit.

2. The internal high-speed oscillator must be operated (HIOSTOP = 0) when DSCON = 1.

The bits related to the selection of the CPU/peripheral hardware clock (f_{CLK}) are shown below.

Table 5-4. Relationship Between CPU/Peripheral Hardware Clock (f_{CLK}) and Bit Settings

CMC register			CSC register			CKC register		DSCCTL register			CPU/Peripheral Hardware Clock (f_{CLK})
EXCLK	OSCSEL	OSCSELS Note 1	MSTOP	XTSTOP Note 1	HIOSTOP	CSS	MCM0	SELDSC	DSPO	DSCON	
0	1	×	0	×	×	0	1	0	0	×	High-speed system clock (X1 oscillation) (2 to 20 MHz)
1	1	×	0	×	×	0	1	0	0	×	High-speed system clock (external input clock) (2 to 20 MHz)
×	×	×	×	×	0	0	0	0	0	×	Internal high-speed oscillation clock (8 MHz (TYP.))
×	×	1	×	0	×	1	× Note 2	0	0	×	Subsystem Clock Note 3 (32.768 kHz)
×	×	×	×	×	0	0	0	1	1	1	40 MHz internal high-speed oscillation clock (40 MHz(TYP.)) Note 4

Notes 1. OSCSELS and XTSTOP bits are not provided in the 78K0R/IB3.

2. Changing the MCM0 bit value while CSS is set to 1 is prohibited.

3. The 78K0R/IB3 doesn't have the subsystem clock.

4. The supply of a clock of 20 MHz is supplied, because the clock supplied to a CPU or peripheral hardware that does not support 40 MHz is halved ($f_{CLK}/2$) by setting DSPO (bit 1 of the DSCCTL register) to 1.

Remark ×: don't care

(7) Peripheral enable registers 0, 1, 2 (PER0, PER1, PER2)

These registers are used to enable or disable supplying the clock to the peripheral hardware. Clock supply to the hardware that is not used is also stopped so as to decrease the power consumption and noise.

To use the peripheral functions below, which are controlled by this register, set (1) the bit corresponding to each function before specifying the initial settings of the peripheral functions.

- Real-time counter [Note 1]
- A/D converter
- Serial interface IICA [Note 2]
- Serial array unit SAU
- Comparator/programmable gain amplifier
- Timer array unit TAUS
- Inverter control functions by the timer array unit TAUS

PER0, PER1, PER2 can be set by a 1-bit or 8-bit memory manipulation instruction.

Reset signal generation clears theses registers to 00H.

Notes 1. The 78K0R/IB3 doesn't have the real-time counter..

2. The 78K0R/IB3 and the 38-pin and 44-pin products of the 78K0R/IC3 don't have the serial interface IICA.

Figure 5-9. Format of Peripheral Enable Registers (1/2)

Address: F00F0H After reset: 00H R/W

Symbol	<7>	6	<5>	<4>	3	<2>	1	0
PER0	RTCEN Note 1	0	ADCEN	IICAEN Note 2	0	SAU0EN	0	0

Address: F00F1H After reset: 00H R/W

Symbol	7	6	5	4	<3>	2	1	0
PER1	0	0	0	0	OACMPEN	0	0	0

Address: F00F2H After reset: 00H R/W

Symbol	7	6	5	4	3	2	<1>	<0>
PER2	0	0	0	0	0	0	TAUOPEN	TAU0EN

Bit 7 (PER0)

RTCEN Note 1	Control of real-time counter (RTC) input clock supply Note 3
0	Stops input clock supply. • SFR used by the real-time counter (RTC) cannot be written. • The real-time counter (RTC) is in the reset status.
1	Enables input clock supply. • SFR used by the real-time counter (RTC) can be read and written.

Bit 5 (PER0)

ADCEN	Control of A/D converter input clock supply
0	Stops input clock supply. • SFR used by the A/D converter cannot be written. • The real-time counter (RTC) is in the reset status.
1	Enables input clock supply. • SFR used by the A/D converter can be read and written.

Notes 1. RTCEN bit is not provided in the 78K0R/IB3. In the 78K0R/IB3, bit 7 of PER0 register is fixed to 0.

2. IICAEN bit is not provided in the 78K0R/IB3 and the 38-pin and 44-pin products of the the 78K0R/IC3. In the 78K0R/IB3 and the 38-pin and 44-pin products of the 78K0R/IC3, bit 4 of PER0 register is fixed to 0.

3. The input clock that can be controlled by RTCEN is used when the register that is used by the real-time counter (RTC) is accessed from the CPU. RTCEN cannot control supply of the operating clock (f_{SUB}) to RTC.

Caution Be sure to clear the following bits to 0.

- **Bits 0, 1, 3, and 6 of the PER0 register**
  (78K0R/IB3 : bits 0, 1, 3, 4, 6, 7, 38-pin and 44-pin products of 78K0R/IC3 : bits 0, 1, 3, 4, 6)
- **Bits 0 to 2 and 4 to 7 of the PER1 register**
- **Bits 2 to 7 of the PER2 register**

Figure 5-9. Format of Peripheral Enable Registers (2/2)

Bit 4 (PER0)

IICAEN[Note]	Control of serial interface IICA input clock supply
0	Stops input clock supply. • SFR used by the serial interface IICA cannot be written. • The serial interface IICA is in the reset status.
1	Enables input clock supply. • SFR used by the serial interface IICA can be read and written.

Bit 2 (PER0)

SAU0EN	Control of serial array unit input clock supply
0	Stops input clock supply. • SFR used by the serial array unit cannot be written. • The serial array unit is in the reset status.
1	Enables input clock supply. • SFR used by the serial array unit can be read and written.

Bit 3 (PER1)

OACMPEN	Control of comparator/programmable gain amplifier input clock supply
0	Stops input clock supply. • SFR used by the comparator/programmable gain amplifier cannot be written. • The comparator/programmable gain amplifier is in the reset status.
1	Enables input clock supply. • SFR used by the comparator/programmable gain amplifier can be read and written.

Bit 1 (PER2)

TAUOPEN	Control of inverter control function input clock supply
0	Stops input clock supply. • SFR used by the inverter control function cannot be written. • The inverter control function is in the reset status.
1	Enables input clock supply. • SFR used by the inverter control function can be read and written.

Bit 0 (PER2)

TAU0EN	Control of timer array unit TAUS input clock supply
0	Stops input clock supply. • SFR used by timer array unit TAUS cannot be written. • Timer array unit TAUS is in the reset status.
1	Enables input clock supply. • SFR used by timer array unit TAUS can be read and written.

Note IICAEN bit is not provided in the 78K0R/IB3 and the 38-pin and 44-pin products of the 78K0R/IC3. In the 78K0R/IB3 and the 38-pin and 44-pin products of the 78K0R/IC3, bit 4 of PER0 register is fixed to 0.

Caution Be sure to clear the following bits to 0.

- **Bits 0, 1, 3, and 6 of the PER0 register**
  (78K0R/IB3 : bits 0, 1, 3, 4, 6, 7, 38-pin and 44-pin products of 78K0R/IC3 : bits 0, 1, 3, 4, 6)
- **Bits 0 to 2 and 4 to 7 of the PER1 register**
- **Bits 2 to 7 of the PER2 register**

(8) Operation speed mode control register (OSMC)

This register is used to control the step-up circuit of the flash memory for high-speed operation.

If the microcontroller operates on a system clock of 10 MHz or more, set this register to 01H.

If the microcontroller operates at low speed on a system clock of 10 MHz or less, power consumption can be reduced, because the voltage booster can be stopped by setting this register to its initial value, 00H.

OSMC can be set by an 8-bit memory manipulation instruction.

Reset signal generation clears this register to 00H.

Figure 5-10. Format of Operation Speed Mode Control Register (OSMC)

Address: F00F3H After reset: 00H R/W

Symbol	7	6	5	4	3	2	1	0
OSMC	0	0	0	0	0	0	0	FSEL

FSEL	f_{CLK} frequency selection
0	Operates at a frequency of 10 MHz or less (default).
1	Operates at a frequency higher than 10 MHz.

Cautions 1. OSMC can be written only once after reset release, by an 8-bit memory manipulation instruction.

2. Write "1" to FSEL before the following two operations.

- **Changing the clock prior to dividing f_{CLK} to a clock other than Internal high-speed oscillation clock frequency f_{IH}.**
- **Operating the DMA controller.**

3. The CPU waits (140.5 clock (f_{CLK})). when "1" is written to the FSEL bit.
Interrupt requests issued during a wait will be suspended.
However, counting the oscillation stabilization time of f_X can continue even while the CPU is waiting.

4. To increase f_{CLK} to 10 MHz or higher, set FSEL to "1", then change f_{CLK} after three or more clocks have elapsed.

5. Set FSEL to 0 when the microcontroller operates on 10 MHz or less.

6. Set FSEL = 0 to shift to STOP mode while V_{DD} = 2.7 V.

7. When the FSEL bit of the OSMC register has been set to 1, do not enable (DENn = 1) DMA operation for at least three clocks after the setting.

5.4 System Clock Oscillator

5.4.1 X1 oscillator

The X1 oscillator oscillates with a crystal resonator or ceramic resonator (2 to 20 MHz) connected to the X1 and X2 pins.

An external clock can also be input. In this case, input the clock signal to the EXCLK pin.

To use the X1 oscillator, set bits 7 and 6 (EXCLK, OSCSEL) of the clock operation mode control register (CMC) as follows.

- Crystal or ceramic oscillation: EXCLK, OSCSEL = 0, 1
- External clock input: EXCLK, OSCSEL = 1, 1

When the X1 oscillator is not used, set the input port mode (EXCLK, OSCSEL = 0, 0).

When the pins are not used as input port pins, either, see **Table 2-5 to Table 2-10 Connection of Unused Pins**.

Figure 5-11 shows an example of the external circuit of the X1 oscillator.

Figure 5-11. Example of External Circuit of X1 Oscillator

(a) Crystal or ceramic oscillation **(b) External clock**

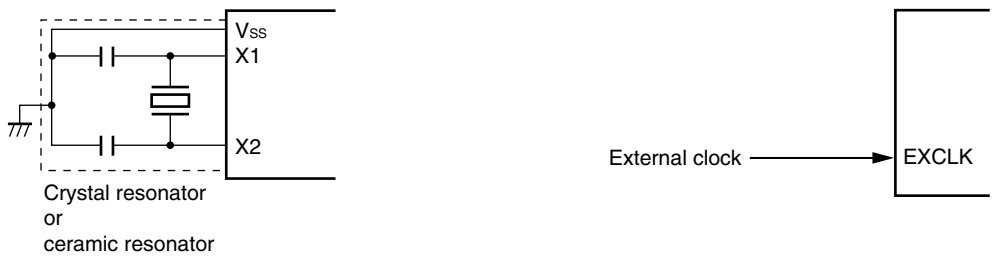

Cautions are listed on the next page.

5.4.2 XT1 oscillator (products other than 78K0R/IB3)

The XT1 oscillator oscillates with a crystal resonator (standard: 32.768 kHz) connected to the XT1 and XT2 pins.

To use the XT1 oscillator, set bit 4 (OSCSELS) of the clock operation mode control register (CMC) to 1.

When the XT1 oscillator is not used, set the input port mode (OSCSELS = 0).

When the pins are not used as input port pins, either, see **Table 2-5 to Table 2-10 Connection of Unused Pins**.

Figure 5-12 shows an example of the external circuit of the XT1 oscillator.

Figure 5-12. Example of External Circuit of XT1 Oscillator (Crystal Oscillation)

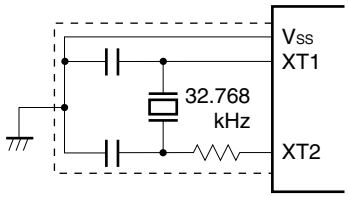

Cautions are listed on the next page.

Caution **When using the X1 oscillator and XT1 oscillator, wire as follows in the area enclosed by the broken lines in the Figures 5-11 and 5-12 to avoid an adverse effect from wiring capacitance.**

- **Keep the wiring length as short as possible.**
- **Do not cross the wiring with the other signal lines. Do not route the wiring near a signal line through which a high fluctuating current flows.**
- **Always make the ground point of the oscillator capacitor the same potential as V_{SS}. Do not ground the capacitor to a ground pattern through which a high current flows.**
- **Do not fetch signals from the oscillator.**
- **Pins and circuit boards include parasitic capacitance. Therefore, perform oscillation evaluation using a circuit board to be actually used and confirm that there are no problems.**
- **Configure the circuit of the circuit board, using material with little wiring resistance.**
- **Place a ground pattern that has the same potential as V_{SS} as much as possible near the XT1 oscillator.**
- **Be sure that the signal lines between the XT1 and XT2 pins, and the resonators do not cross with the other signal lines. Do not route the wiring near a signal line through which a high fluctuating current flows.**
- **The impedance between the XT1 and XT2 pins may drop and oscillation may be disturbed due to moisture absorption of the circuit board in a high-humidity environment or dew condensation on the board. When using the circuit board in such an environment, take measures to damp-proof the circuit board, such as by coating.**
- **When coating the circuit board, use material that does not cause capacitance or leakage between the XT1 and XT2 pins.**

Figure 5-13. Examples of Incorrect Resonator Connection (1/2)

(a) Too long wiring

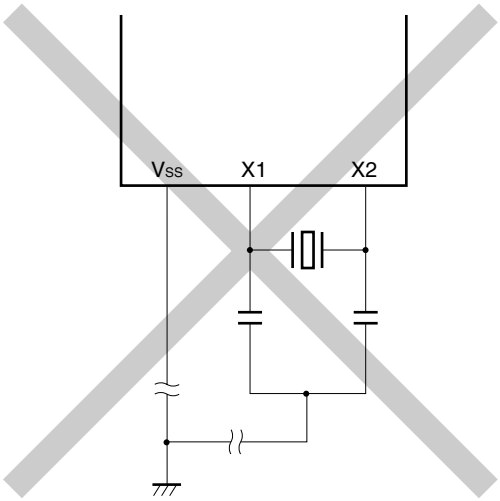

(b) Crossed signal line

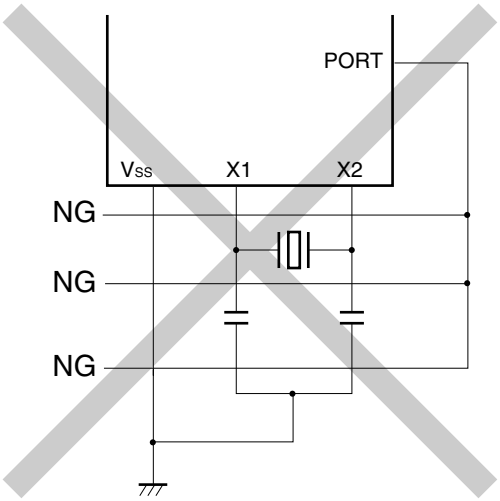

(c) The X1 and X2 signal line wires cross.

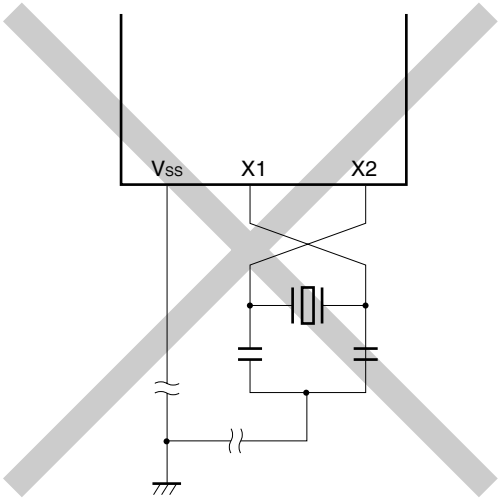

(d) A power supply/GND pattern exists under the X1 and X2 wires.

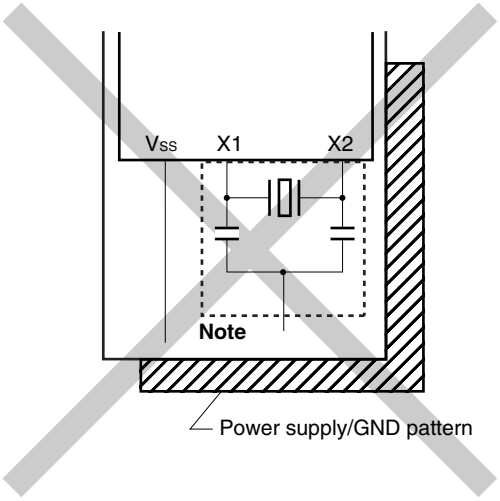

Note Do not place a power supply/GND pattern under the wiring section (section indicated by a broken line in the figure) of the X1 and X2 pins and the resonators in a multi-layer board or double-sided board.
Do not configure a layout that will cause capacitance elements and affect the oscillation characteristics.

Remark When using the subsystem clock, replace X1 and X2 with XT1 and XT2, respectively. Also, insert resistors in series on the XT2 side.

Figure 5-13. Examples of Incorrect Resonator Connection (2/2)

(e) Wiring near high alternating current

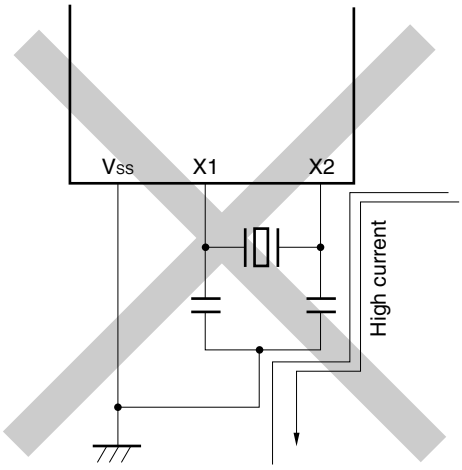

(f) Current flowing through ground line of oscillator (potential at points A, B, and C fluctuates)

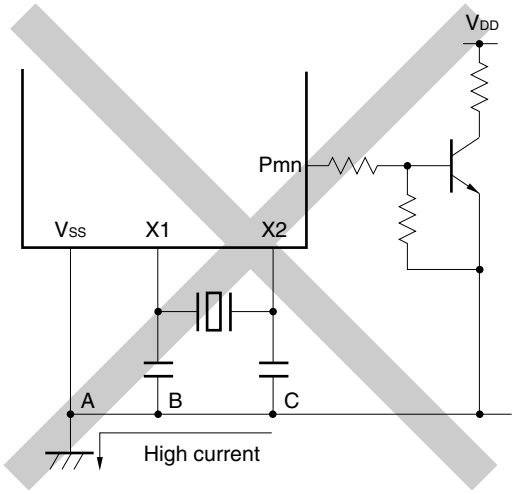

(g) Signals are fetched

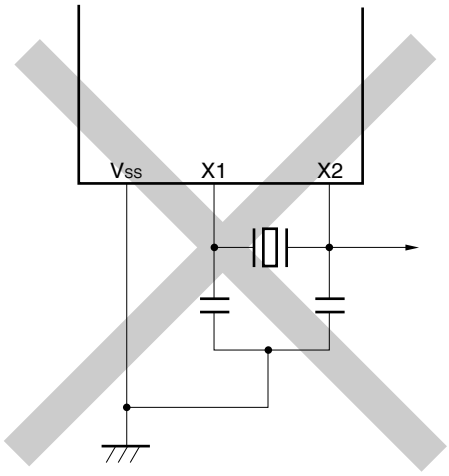

Caution When X2 and XT1 are wired in parallel, the crosstalk noise of X2 may increase with XT1, resulting in malfunctioning.

Remark When using the subsystem clock, replace X1 and X2 with XT1 and XT2, respectively. Also, insert resistors in series on the XT2 side.

5.4.3 Internal high-speed oscillator

The internal high-speed oscillator is incorporated in the 78K0R/Ix3 (8 and 40 MHz (TYP.)). Oscillation can be controlled by bit 0 (HIOSTOP) of the clock operation status control register (CSC) and bit 0 (DSCON) of the 40 MHz internal high-speed oscillation control register (DSCCTL).

After a reset release, the 8 MHz internal high-speed oscillator starts oscillating automatically. Afterward, the 40 MHz internal high-speed oscillator starts oscillating when the DSCON bit of the DSCCTL register has been set to 1.

5.4.4 Internal low-speed oscillator

The internal low-speed oscillator is incorporated in the 78K0R/Ix3.

The internal low-speed oscillation clock is used only as the watchdog timer clock. The internal low-speed oscillation clock cannot be used as the CPU clock.

After a reset release, the internal low-speed oscillator automatically starts oscillation, and the watchdog timer is driven (30 kHz (TYP.)) if the watchdog timer operation is enabled by the option byte.

The internal low-speed oscillator continues oscillation except when the watchdog timer stops. When the watchdog timer operates, the internal low-speed oscillation clock does not stop, even in case of a program loop.

5.4.5 Prescaler

The prescaler generates a CPU/peripheral hardware clock by dividing the main system clock and subsystem clock.

5.5 Clock Generator Operation

The clock generator generates the following clocks and controls the operation modes of the CPU, such as standby mode (see **Figure 5-1 and Figure 5-2**).

- Main system clock f_{MAIN}
  - High-speed system clock f_{MX}
    - X1 clock f_X
    - External main system clock f_{EX}
  - Internal high-speed oscillation clock f_{IH}
  - 40 MHz internal high-speed oscillation clock f_{IH40}
- Subsystem clock f_{SUB} **Note**
- Internal low-speed oscillation clock f_{IL}
- CPU/peripheral hardware clock f_{CLK}

Note The 78K0R/IB3 doesn't have the subsystem clock.

The CPU starts operation when the internal high-speed oscillator starts outputting after a reset release in the 78K0R/Ix3, thus enabling the following.

(1) Enhancement of safety function

When the X1 clock is set as the CPU clock by the default setting, the device cannot operate if the X1 clock is damaged or badly connected and therefore does not operate after reset is released. However, the start clock of the CPU is the internal high-speed oscillation clock, so the device can be started by the internal high-speed oscillation clock after a reset release. As a result, reset sources can be detected by software and the minimum amount of safety processing can be done during anomalies to ensure that the system terminates safely.

(2) Improvement of performance

Because the CPU can be started without waiting for the X1 clock oscillation stabilization time, the total performance can be improved.

When the power supply voltage is turned on, the clock generator operation is shown in Figure 5-14.

Figure 5-14. Clock Generator Operation When Power Supply Voltage Is Turned On

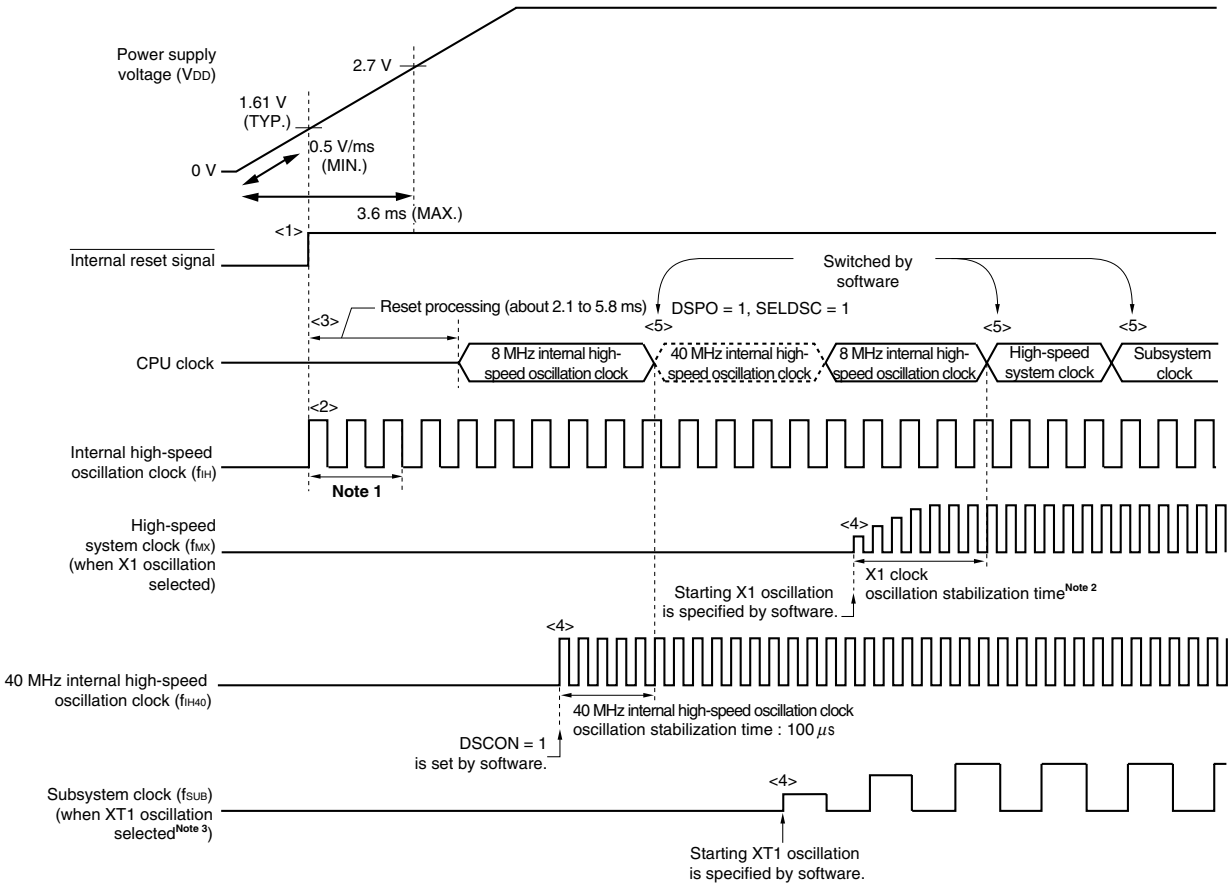

<1> When the power is turned on, an internal reset signal is generated by the power-on-clear (POC) circuit.

<2> When the power supply voltage exceeds 1.61 V (TYP.), the reset is released and the internal high-speed oscillator automatically starts oscillation.

<3> CPU starts operation on the internal high-speed oscillation clock after a reset processing such as waiting for the voltage of the power supply or regulator to stabilize has been performed after reset release.

<4> Set the start of oscillation of the X1 or XT1 clock[Note 3] via software (see **5.6.3 Example of setting X1 oscillator** and **5.6.4 Example of setting XT1 oscillator** (products other than 78K0R/IB3)).

Switch to oscillation using the 40 MHz internal high-speed oscillation clock after setting DSCON bit to 1 by using software.

<5> When switching the CPU clock to the X1 or XT1 clock[Note 3], wait for the clock oscillation to stabilize, and then set switching via software (see **5.6.3 Example of setting X1 oscillator** and **5.6.4 Example of setting XT1 oscillator** (products other than 78K0R/IB3)).

Switch to the 40 MHz internal high-speed oscillation clock by setting the DSCON bit (bit 0 of the 40 MHz internal high-speed oscillation control register (DSCCTL)), waiting for 100 μs, and then setting DSPO and SELDSC bits to 1 by using software.

Notes 1. The internal reset processing time includes the oscillation accuracy stabilization time of the internal high-speed oscillation clock.

2. When releasing a reset, confirm the oscillation stabilization time for the X1 clock using the oscillation stabilization time counter status register (OSTC).

3 The 78K0R/IB3 doesn't have the subsystem clock.

(**Cautions** are listed on the next page.)

Cautions 1. Set so that no more than 3.6 ms elapses between when power is applied and when the voltage reaches 2.7 V. If more time is required (if the voltage needs to rise more slowly than the 0.5 V/ms (MIN.) rating), be sure to input a low level to the $\overline{\text{RESET}}$ pin before the voltage reaches 2.7 V after power application. By doing so, the CPU operates with the same timing as <2> and thereafter in Figure 5-14 after reset release by the $\overline{\text{RESET}}$ pin.

For supply voltage rise time timing and power supply voltage rise inclination, see CHAPTER 28 ELECTRICAL SPECIFICATIONS.

2. It is not necessary to wait for the oscillation stabilization time when an external clock input from the EXCLK pin is used.

5.6 Controlling Clock

5.6.1 Example of setting internal high-speed oscillator

After a reset release, the CPU/peripheral hardware clock (f_{CLK}) always starts operating with the internal high-speed oscillation clock. Use the system clock control register (CKC) to specify the division ratio for the clock to be supplied to the CPU/peripheral hardware after releasing reset. When using the default division setting ($f_{IH}/2$ = 4 MHz), the CKC register is not required to be set.

[Register settings]

<1> Use the MDIV2 to MDIV0 bits of the CKC register to specify the division ratio for the CPU/peripheral hardware clock.

	7	6	5	4	3	2	1	0
CKC	CLS Note	CSS	MCS	MCM0		MDIV2	MDIV1	MDIV0
	0	0	0	0	1	0/1	0/1	0/1

Note CLS bit is not provided in the 78K0R/IB3. In the 78K0R/IB3, bit 7 is fixed to 0.

5.6.2 Example of setting 40 MHz internal high-speed oscillator

After a reset release, the CPU/peripheral hardware clock (f_{CLK}) always starts operating with the internal high-speed oscillation clock. To subsequently using 40 MHz internal high-speed oscillation clock, set the operation speed mode control register (OSMC) and then the 40 MHz internal high-speed oscillation control register (DSCCTL).

[Register settings] Set the register in the order of <1> to <8> below.

<1> Set the OSMC register so that the microcontroller operates at a frequency exceeding 10 MHz.

	7	6	5	4	3	2	1	0
OSMC								FSEL
	0	0	0	0	0	0	0	1

<2> Set (1) the FSEL bit and then wait for 10 μs.

<3> Set (1) the DSCON bit of the DSCCTL register to operate the 40 MHz internal high-speed oscillator.

	7	6	5	4	3	2	1	0
DSCCTL					DSCS	SELDSC	DSPO	DSCON
	0	0	0	0	0	0	0	1

<4> Set (1) the DSCON bit and then wait for 100 μs.

<5> Set the DSPO bit of the DSCCTL register to 1, supply f_{CLK} (40 MHz) to the timer array unit TAUS and inverter control block, and supply $f_{CLK}/2$ to the CPU and other peripheral hardware.

	7	6	5	4	3	2	1	0
DSCCTL					DSCS	SELDSC	DSPO	DSCON
	0	0	0	0	0	0	1	1

<6> Set (1) the SELDSC bit of the DSCCTL register to switch the internal high-speed oscillation clock from 8 MHz to 40 MHz.

	7	6	5	4	3	2	1	0
DSCCTL					DSCS	SELDSC	DSPO	DSCON
	0	0	0	0	0	1	1	1

<7> Wait until the DSCS bit changes to 1.

<8> Use the MDIV2 to MDIV0 bits of the CKC register to specify the division ratio for the CPU/peripheral hardware clock.

	7	6	5	4	3	2	1	0
CKC	CLS Note	CSS	MCS	MCM0		MDIV2	MDIV1	MDIV0
	0	0	0	0	1	0/1	0/1	0/1

Note CLS bit is not provided in the 78K0R/IB3. In the 78K0R/IB3, bit 7 is fixed to 0.

5.6.3 Example of setting X1 oscillator

After a reset release, the CPU/peripheral hardware clock (f_{CLK}) always starts operating with the internal high-speed oscillation clock. To subsequently change the clock to the X1 oscillation clock, set the oscillator and start oscillation by using the operation speed mode control register (OSMC), clock operation mode control register (CMC), and clock operation status control register (CSC) and wait for oscillation to stabilize by using the oscillation stabilization time counter status register (OSTC). After the oscillation stabilizes, set the X1 oscillation clock to f_{CLK} by using the system clock control register (CKC).

[Register settings] Set the register in the order of <1> to <7> below.

<1> Use the OSMC register to set the frequency of the CPU/peripheral hardware.

	7	6	5	4	3	2	1	0
OSMC								FSEL
	0	0	0	0	0	0	0	1

FSEL bit: Set this bit to 0 if the CPU/peripheral hardware clock is 10 MHz or less.

<2> Set (1) the FSEL bit and then wait for 10 μs.

<3> Set (1) the OSCSEL bit of the CMC register to operate the X1 oscillator.

	7	6	5	4	3	2	1	0
CMC	EXCLK	OSCSEL		OSCSELS Note				AMPH
	0	1	0	0	0	0	0	1

AMPH bit: Set this bit to 0 if the X1 oscillation clock is 10 MHz or less.

OSCSELS bit Note: Set this bit to 1 to set P122 and P123 to XT1 oscillation mode.

Note OSCSELS bit is not provided in the 78K0R/IB3. In the 78K0R/IB3, bit 4 is fixed to 0.

<4> Clear (0) the MSTOP bit of the CSC register to start oscillating the X1 oscillator.

	7	6	5	4	3	2	1	0
CSC	MSTOP	XTSTOP Note						HIOSTOP
	0	1	0	0	0	0	0	0

XTSTOP bit Note: Set this bit to 0 to oscillate the XT1 oscillator.

Note XTSTOP bit is not mounted onto the 78K0R/IB3. In the 78K0R/IB3, bit 6 is fixed to 0.

<5> Use the OSTC register to wait for oscillation of the X1 oscillator to stabilize.

Example: Wait until the bits reach the following values when a wait of at least 102.4 μs is set based on a 10 MHz resonator.

	7	6	5	4	3	2	1	0
OSTC	MOST8	MOST9	MOST10	MOST11	MOST13	MOST15	MOST17	MOST18
	1	1	1	0	0	0	0	0

<6> Use the MCM0 bit of the CKC register to specify the X1 oscillation clock as the CPU/peripheral hardware clock. Use the MDIV2 to MDIV0 bits to specify the division ratio.

	7	6	5	4	3	2	1	0
CKC	CLS Note	CSS	MCS	MCM0		MDIV2	MDIV1	MDIV0
	0	0	0	1	1	0/1	0/1	0/1

Note CLS bit is not provided in the 78K0R/IB3. In the 78K0R/IB3, bit 7 is fixed to 0.

<7> Wait until the MCS bit changes to 1.

5.6.4 Example of setting XT1 oscillator (products other than 78K0R/IB3)

After a reset release, the CPU/peripheral hardware clock (f_{CLK}) always starts operating with the internal high-speed oscillation clock. To subsequently change the clock to the XT1 oscillation clock, set the oscillator and start oscillation by using the operation speed mode control register (OSMC), clock operation mode control register (CMC), and clock operation status control register (CSC), set the XT1 oscillation clock to f_{CLK} by using the system clock control register (CKC).

[Register settings] Set the register in the order of <1> to <6> below.

<1> Use the OSMC register to set the frequency of the CPU/peripheral hardware.

	7	6	5	4	3	2	1	0
OSMC								FSEL
	0	0	0	0	0	0	0	0

<2> Set (1) the OSCSELS bit of the CMC register to operate the XT1 oscillator.

	7	6	5	4	3	2	1	0
CMC	EXCLK	OSCSEL		OSCSELS				AMPH
	0	0	0	1	0	0	0	0

<3> Clear (0) the XTSTOP bit of the CSC register to start oscillating the XT1 oscillator.

	7	6	5	4	3	2	1	0
CSC	MSTOP	XTSTOP						HIOSTOP
	1	0	0	0	0	0	0	0

<4> Use the timer function or another function to wait for oscillation of the subsystem clock to stabilize by using software.

<5> Use the CSS bit of the CKC register to specify the XT1 oscillation clock as the CPU/peripheral hardware clock.

	7	6	5	4	3	2	1	0
CKC	CLS	CSS	MCS	MCM0		MDIV2	MDIV1	MDIV0
	0	1	0	0	1	0	0	0

<6> Wait until the CLS bit changes to 1.

5.6.5 CPU clock status transition diagram

Figure 5-15 and Figure 5-16 shows the CPU clock status transition diagram of this product.

Figure 5-15. CPU Clock Status Transition Diagram (78K0R/IC3, ID3, IE3)

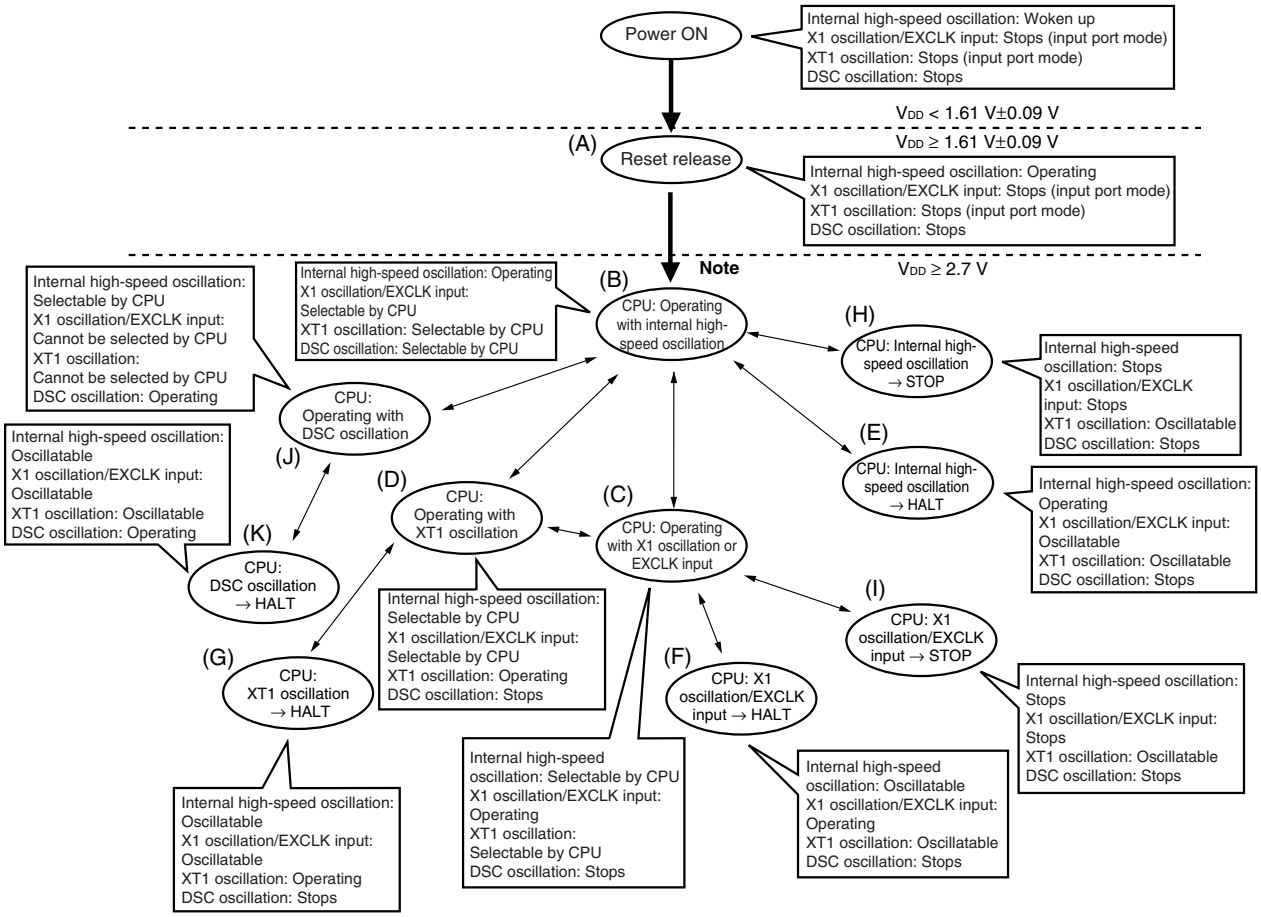

Note After reset release, operation at 4 MHz (8 MHz/2) is started, because $f_{CLK} = f_{IH}/2$ has been selected by setting the system clock control register (CKC) to 09H.

Remark DSC: 40 MHz internal high-speed oscillation clock

Figure 5-16. CPU Clock Status Transition Diagram (78K0R/IB3)

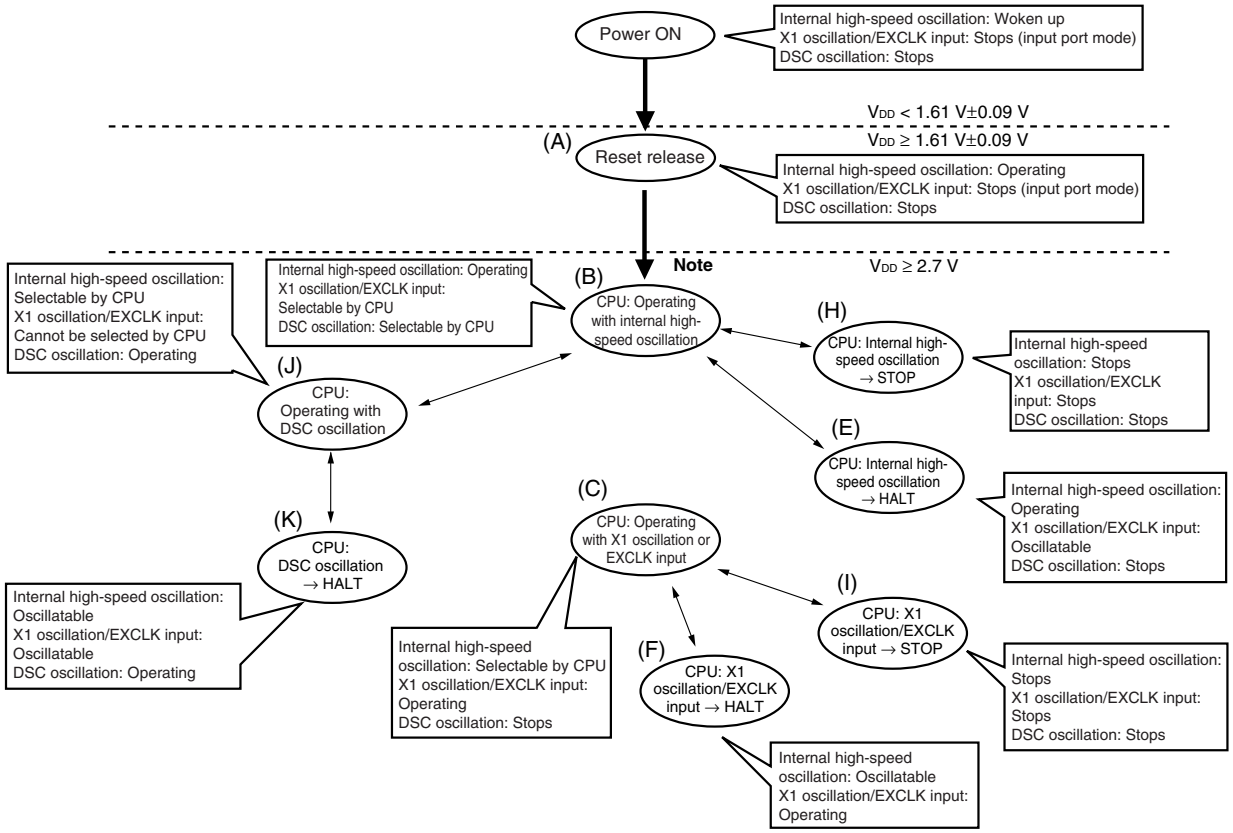

Note After reset release, operation at 4 MHz (8 MHz/2) is started, because $f_{CLK} = f_{IH}/2$ has been selected by setting the system clock control register (CKC) to 09H.

Remark DSC: 40 MHz internal high-speed oscillation clock

Table 5-5 shows transition of the CPU clock and examples of setting the SFR registers.

Table 5-5. CPU Clock Transition and SFR Register Setting Examples (1/6)

(1) CPU operating with internal high-speed oscillation clock (B) after reset release (A)

Status Transition	SFR Register Setting
(A) → (B)	SFR registers doesn't have to be set (default status after reset release).

(2) CPU operating with high-speed system clock (C) after reset release (A)

(The CPU operates with the internal high-speed oscillation clock immediately after a reset release (B).)

(Setting sequence of SFR registers) →

Setting Flag of SFR Register / Status Transition	CMC Register[Note 1]			CSC Register	OSMC Register	OSTC Register	CKC Register
	EXCLK	OSCSEL	AMPH	MSTOP	FSEL		MCM0
(A) → (B) → (C) (X1 clock: 2 MHz ≤ fx ≤ 10 MHz)	0	1	0	0	0	Must be checked	1
(A) → (B) → (C) (X1 clock: 10 MHz < fx ≤ 20 MHz)	0	1	1	0	1[Note 2]	Must be checked	1
(A) → (B) → (C) (external main clock)	1	1	0/1	0	0/1[Note 2]	Must not be checked	1

Notes 1. The CMC register can be written only once by an 8-bit memory manipulation instruction after reset release.

2. FSEL = 1 when f_{CLK} > 10 MHz
If a divided clock is selected and f_{CLK} ≤ 10 MHz, use with FSEL = 0 is possible even if f_X > 10 MHz.

Caution Set the clock after the supply voltage has reached the operable voltage of the clock to be set (see CHAPTER 28 ELECTRICAL SPECIFICATIONS).

(3) CPU operating with subsystem clock (D) after reset release (A) (products other than 78K0R/IB3)

(The CPU operates with the internal high-speed oscillation clock immediately after a reset release (B).)

(Setting sequence of SFR registers) →

Setting Flag of SFR Register / Status Transition	CMC Register[Note]	CSC Register	Waiting for Oscillation Stabilization	CKC Register
	OSCSELS	XTSTOP		CSS
(A) → (B) → (D)	1	0	Necessary	1

Note The CMC register can be written only once by an 8-bit memory manipulation instruction after reset release.

Remark (A) to (K) in Table 5-5 correspond to (A) to (K) in Figure 5-15 and Figure 5-16, Figure.

Table 5-5. CPU Clock Transition and SFR Register Setting Examples (2/6)

(4) CPU operating with 40 MHz internal high-speed oscillation clock (J) after reset release (A)

(The CPU operates with the internal high-speed oscillation clock immediately after a reset release (B).)

(Setting sequence of SFR registers) →

Setting Flag of SFR Register / Status Transition	DSCCTL Register	Waiting for Oscillation Stabilization	DSCCTL Register	DSCCTL Register
	DSCON		DSPO	SELDSC
(A) → (B) → (J)	1	Necessary (100 μs)	1	1

(5) CPU clock changing from internal high-speed oscillation clock (B) to high-speed system clock (C)

(Setting sequence of SFR registers) →

Setting Flag of SFR Register / Status Transition	CMC Register[Note 1]			OSTS Register	CSC Register	OSMC Register	OSTC Register	CKC Register
	EXCLK	OSCSEL	AMPH		MSTOP	FSEL		MCM0
(B) → (C) (X1 clock: 2 MHz ≤ fX ≤ 10 MHz)	0	1	0	**Note 2**	0	0	Must be checked	1
(B) → (C) (X1 clock: 10 MHz < fX ≤ 20 MHz)	0	1	1	**Note 2**	0	1[Note 3]	Must be checked	1
(B) → (C) (external main clock)	1	1	0/1	**Note 2**	0	0/1	Must not be checked	1

Unnecessary if these registers are already set

Unnecessary if the CPU is operating with the high-speed system clock

Notes 1. The CMC register can be changed only once after reset release. This setting is not necessary if it has already been set.

2. Set the oscillation stabilization time as follows.

- Desired OSTC oscillation stabilization time ≤ Oscillation stabilization time set by OSTS

3. FSEL = 1 when f_{CLK} > 10 MHz

If a divided clock is selected and f_{CLK} ≤ 10 MHz, use with FSEL = 0 is possible even if f_X > 10 MHz.

Caution Set the clock after the supply voltage has reached the operable voltage of the clock to be set (see CHAPTER 28 ELECTRICAL SPECIFICATIONS).

Remark (A) to (K) in Table 5-5 correspond to (A) to (K) in Figure 5-15 and Figure 5-16.

Table 5-5. CPU Clock Transition and SFR Register Setting Examples (3/6)

(6) CPU clock changing from internal high-speed oscillation clock (B) to subsystem clock (D) (products other than 78K0R/IB3)

(Setting sequence of SFR registers) →

Setting Flag of SFR Register / Status Transition	CMC Register[Note]	CSC Register	Waiting for Oscillation Stabilization	CKC Register
	OSCSELS	XTSTOP		CSS
(B) → (D)	1	0	Necessary	1

Unnecessary if the CPU is operating with the subsystem clock

Note The CMC register can be written only once by an 8-bit memory manipulation instruction after reset release.

(7) CPU clock changing from internal high-speed oscillation clock (B) to 40 MHz internal high-speed oscillation clock (J)

(Setting sequence of SFR registers) →

Setting Flag of SFR Register / Status Transition	DSCCTL Register	Waiting for Oscillation Stabilization	DSCCTL Register	DSCCTL Register
	DSCON		DSPO	SELDSC
(B) → (J)	1	Necessary (100 μs)	1	1

Unnecessary if the CPU is operating with the 40 MHz internal high-speed oscillation clock

(8) CPU clock changing from high-speed system clock (C) to internal high-speed oscillation clock (B)

(Setting sequence of SFR registers) →

Setting Flag of SFR Register / Status Transition	CSC Register	Oscillation accuracy stabilization time	CKC Register
	HIOSTOP		MCM0
(C) → (B)	0	10 μs	0

Unnecessary if the CPU is operating with the internal high-speed oscillation clock

Remark (A) to (K) in Table 5-5 correspond to (A) to (K) in Figure 5-15 and Figure 5-16.

Table 5-5. CPU Clock Transition and SFR Register Setting Examples (4/6)

(9) CPU clock changing from high-speed system clock (C) to subsystem clock (D) (products other than 78K0R/IB3)

(Setting sequence of SFR registers) →

Setting Flag of SFR Register / Status Transition	CSC Register	Waiting for Oscillation Stabilization	CKC Register
	XTSTOP		CSS
(C) → (D)	0	Necessary	1

Unnecessary if the CPU is operating with the subsystem clock

(10) CPU clock changing from subsystem clock (D) to internal high-speed oscillation clock (B) (products other than 78K0R/IB3)

(Setting sequence of SFR registers) →

Setting Flag of SFR Register / Status Transition	CSC Register	CKC Register	
	HIOSTOP	MCM0	CSS
(D) → (B)	0	0	0

Unnecessary if the CPU is operating with the internal high-speed oscillation clock

Unnecessary if this register is already set

Remark (A) to (K) in Table 5-5 correspond to (A) to (K) in Figure 5-15 and Figure 5-16.

Table 5-5. CPU Clock Transition and SFR Register Setting Examples (5/6)

(11) CPU clock changing from subsystem clock (D) to high-speed system clock (C) (products other than 78K0R/IB3)

(Setting sequence of SFR registers) →

Setting Flag of SFR Register / Status Transition	OSTS Register	CSC Register	OSMC Register	OSTC Register	CKC Register	
		MSTOP	FSEL		MCM0	CSS
(D) → (C) (X1 clock: 2 MHz ≤ f_X ≤ 10 MHz)	Note 1	0	0	Must be checked	1	0
(D) → (C) (X1 clock: 10 MHz < f_X ≤ 20 MHz)	Note 1	0	1 Note 2	Must be checked	1	0
(D) → (C) (external main clock)	Note 1	0	0/1	Must not be checked	1	0

Unnecessary if the CPU is operating with the high-speed system clock

Unnecessary if these registers are already set

Notes 1. Set the oscillation stabilization time of OSTS as follows.

- Desired OSTC oscillation stabilization time ≤ Oscillation stabilization time set by OSTS

2. FSEL = 1 when f_{CLK} > 10 MHz

If a divided clock is selected and f_{CLK} ≤ 10 MHz, use with FSEL = 0 is possible even if f_X > 10 MHz.

Caution Set the clock after the supply voltage has reached the operable voltage of the clock to be set (see CHAPTER 28 ELECTRICAL SPECIFICATIONS).

(12) CPU clock changing from 40 MHz internal high-speed oscillation clock (J) to internal high-speed oscillation clock (B)

(Setting sequence of SFR registers) →

Setting Flag of SFR Register / Status Transition	DSCCTL Register		
	SELDSC	DSPO	DSCON
(J) → (B)	0	0	0

Remark (A) to (K) in Table 5-5 correspond to (A) to (K) in Figure 5-15 and Figure 5-16.

Table 5-5. CPU Clock Transition and SFR Register Setting Examples (6/6)

(13) • HALT mode (E) set while CPU is operating with internal high-speed oscillation clock (B)
• HALT mode (F) set while CPU is operating with high-speed system clock (C)
• HALT mode (G) set while CPU is operating with subsystem clock (D) (products other than 78K0R/IB3)
• HALT mode (K) set while CPU is operating with 40 MHz internal high-speed oscillation clock (J)

Status Transition	Setting
(B) → (E) (C) → (F) (D) → (G) (J) → (K)	Executing HALT instruction

(14) • STOP mode (H) set while CPU is operating with internal high-speed oscillation clock (B)
• STOP mode (I) set while CPU is operating with high-speed system clock (C)

(Setting sequence) →

Status Transition		Setting		
(B) → (H)		Stopping peripheral functions that cannot operate in STOP mode	–	Executing STOP instruction
(C) → (I)	In X1 oscillation		Sets the OSTS register	
	External main system clock		–	

Remark (A) to (K) in Table 5-5 correspond to (A) to (K) in Figure 5-15 and Figure 5-16.

5.6.6 Condition before changing CPU clock and processing after changing CPU clock

Condition before changing the CPU clock and processing after changing the CPU clock are shown below.

Table 5-6. Changing CPU Clock (1/2)

CPU Clock		Condition Before Change	Processing After Change
Before Change	After Change		
Internal high-speed oscillation clock	X1 clock	Stabilization of X1 oscillation • OSCSEL = 1, EXCLK = 0, MSTOP = 0 • After elapse of oscillation stabilization time	Operating current can be reduced by stopping internal high-speed oscillator (HIOSTOP = 1).
	External main system clock	Enabling input of external clock from EXCLK pin • OSCSEL = 1, EXCLK = 1, MSTOP = 0	
	Subsystem clock Note	Stabilization of XT1 oscillation • OSCSELS = 1, XTSTOP = 0 • After elapse of oscillation stabilization time	
	40 MHz internal high-speed oscillation clock	Stabilization of DSC oscillation • After elapse of oscillation stabilization time (100 μs) after setting to DSCON = 1 • DSPO = 1, SELDSC = 1	–
X1 clock	Internal high-speed oscillation clock	Oscillation of internal high-speed oscillator • HIOSTOP = 0	X1 oscillation can be stopped (MSTOP = 1).
	External main system clock	Transition not possible (To change the clock, set it again after executing reset once.)	–
	Subsystem clock Note	Stabilization of XT1 oscillation • OSCSELS = 1, XTSTOP = 0 • After elapse of oscillation stabilization time	X1 oscillation can be stopped (MSTOP = 1).
	40 MHz internal high-speed oscillation clock	Transition cannot be performed unless the clock is changed to the internal high-speed oscillation clock once.	–
External main system clock	Internal high-speed oscillation clock	Oscillation of internal high-speed oscillator • HIOSTOP = 0	External main system clock input can be disabled (MSTOP = 1).
	X1 clock	Transition not possible (To change the clock, set it again after executing reset once.)	–
	Subsystem clock Note	Stabilization of XT1 oscillation • OSCSELS = 1, XTSTOP = 0 • After elapse of oscillation stabilization time	External main system clock input can be disabled (MSTOP = 1).
	40 MHz internal high-speed oscillation clock	Transition cannot be performed unless the clock is changed to the internal high-speed oscillation clock once.	–

Note The 78K0R/IB3 doesn't have the subsystem clock.

Table 5-6. Changing CPU Clock (2/2)

CPU Clock		Condition Before Change	Processing After Change
Before Change	After Change		
Subsystem clock [Note]	Internal high-speed oscillation clock	Oscillation of internal high-speed oscillator and selection of internal high-speed oscillation clock as main system clock • HIOSTOP = 0, MCS = 0	XT1 oscillation can be stopped (XTSTOP = 1)
	X1 clock	Stabilization of X1 oscillation and selection of high-speed system clock as main system clock • OSCSEL = 1, EXCLK = 0, MSTOP = 0 • After elapse of oscillation stabilization time • MCS = 1	
	External main system clock	Enabling input of external clock from EXCLK pin and selection of high-speed system clock as main system clock • OSCSEL = 1, EXCLK = 1, MSTOP = 0 • MCS = 1	
	40 MHz internal high-speed oscillation clock	Transition cannot be performed unless the clock is changed to the internal high-speed oscillation clock once.	–
40 MHz internal high-speed oscillation clock	Internal high-speed oscillation clock	• SELDSC = 0, DSPO = 0 (Set when changing the clock.)	40 MHz internal high-speed oscillation clock can be stopped (DSCON = 0)
	X1 clock	Transition cannot be performed unless the clock is changed to the internal high-speed oscillation clock once.	–
	External main system clock	Transition cannot be performed unless the clock is changed to the internal high-speed oscillation clock once.	–
	Subsystem clock [Note]	Transition cannot be performed unless the clock is changed to the internal high-speed oscillation clock once.	–

Note The 78K0R/IB3 doesn't have the subsystem clock.

5.6.7 Time required for switchover of CPU clock and main system clock

By setting bits 0 to 2, 4, and 6 (MDIV0 to MDIV2, MCM0, CSS) of the system clock control register (CKC), the CPU clock can be switched (between the main system clock and the subsystem clock), main system clock can be switched (between the internal high-speed oscillation clock and the high-speed system clock), and the division ratio of the main system clock can be changed.

The actual switchover operation is not performed immediately after rewriting to CKC; operation continues on the pre-switchover clock for several clocks (see Table 5-7 to Table 5-10).

Whether the CPU is operating on the main system clock or the subsystem clock [Note] can be ascertained using bit 7 (CLS) of CKC. Whether the main system clock is operating on the high-speed system clock or internal high-speed oscillation clock can be ascertained using bit 5 (MCS) of CKC.

When the CPU clock is switched, the peripheral hardware clock is also switched.

Table 5-7. Maximum Time Required for Main System Clock Switchover

Clock A	Switching directions	Clock B	Remark
f_{MAIN}	←→ (changing the division ratio)	f_{MAIN}	See Table 5-8
f_{IH}	←→	f_{MX}	See Table 5-9
f_{MAIN}	←→	f_{SUB}	See Table 5-10

Table 5-8. Maximum Number of Clocks Required for f_{MAIN} ↔ f_{MAIN} (Changing the Division Ratio)

Set Value Before Switchover	Set Value After Switchover	
	Clock A	Clock B
Clock A		1 + f_A/f_B clock
Clock B	1 + f_B/f_A clock	

Table 5-9. Maximum Number of Clocks Required for f_{IH} ↔ f_{MX}

Set Value Before Switchover		Set Value After Switchover	
MCM0		MCM0	
		0 ($f_{MAIN} = f_{IH}$)	1 ($f_{MAIN} = f_{MX}$)
0 ($f_{MAIN} = f_{IH}$)	$f_{MX}>f_{IH}$		1 + f_{MX}/f_{IH} clock
	$f_{MX}<f_{IH}$		$2f_{IH}/f_{MX}$ clock
1 ($f_{MAIN} = f_{MX}$)	$f_{MX}>f_{IH}$	$2f_{MX}/f_{IH}$ clock	
	$f_{MX}<f_{IH}$	1 + f_{MX}/f_{IH} clock	

Note The 78K0R/IB3 doesn't have the subsystem clock.

(**Remarks 1 and 2** are listed on the next page.)

Table 5-10. Maximum Number of Clocks Required for $f_{MAIN} \leftrightarrow f_{SUB}$

Set Value Before Switchover		Set Value After Switchover	
CSS		CSS	
		0 ($f_{CLK} = f_{MAIN}$)	1 ($f_{CLK} = f_{SUB}$)
0 ($f_{CLK} = f_{MAIN}$)	$f_{MAIN}<f_{SUB}$		2 + f_{MAIN}/f_{SUB} clock
	$f_{MAIN}>f_{SUB}$		1 + 2f_{MAIN}/f_{SUB} clock
1 ($f_{CLK} = f_{SUB}$)	$f_{MAIN}<f_{SUB}$	1 + 2f_{SUB}/f_{MAIN} clock	
	$f_{MAIN}>f_{SUB}$	2 + f_{SUB}/f_{MAIN} clock	

Remarks 1. The number of clocks listed in Table 5-8 to Table 5-10 is the number of CPU clocks before switchover.

2. Calculate the number of clocks in Table 5-8 to Table 5-10 by removing the decimal portion.

Example When switching the main system clock from the internal high-speed oscillation clock to the high-speed system clock (@ oscillation with f_{IH} = 8 MHz, f_{MX} = 10 MHz)

$1 + f_{IH}/f_{MX} = 1 + 8/10 = 1 + 0.8 = 1.8 \rightarrow 2$ clocks

5.6.8 Conditions before clock oscillation is stopped

The following lists the register flag settings for stopping the clock oscillation (disabling external clock input) and conditions before the clock oscillation is stopped.

Table 5-11. Conditions Before the Clock Oscillation Is Stopped and Flag Settings

Clock	Conditions Before Clock Oscillation Is Stopped (External Clock Input Disabled)	Flag Settings of SFR Register
Internal high-speed oscillation clock	MCS = 1 or CLS = 1 (The CPU is operating on a clock other than the internal high-speed oscillation clock.)	HIOSTOP = 1
X1 clock	MCS = 0 or CLS = 1 (The CPU is operating on a clock other than the high-speed system clock.)	MSTOP = 1
External main system clock		
Subsystem clock[Note]	CLS = 0 (The CPU is operating on a clock other than the subsystem clock.)	XTSTOP = 1
40 MHz internal high-speed oscillation clock	SELDSC = 0, DSPO = 0 (The main system clock is operating on a clock other than the 40 MHz internal high-speed oscillation clock.)	DSCON = 0

Note The 78K0R/IB3 doesn't have the subsystem clock.

CHAPTER 6 TIMER ARRAY UNIT TAUS

Timer array unit TAUS has twelve 16-bit timers. Each 16-bit timer is called a channel and can be used as an independent timer. In addition, two or more “channels” can be used to create a high-accuracy timer.

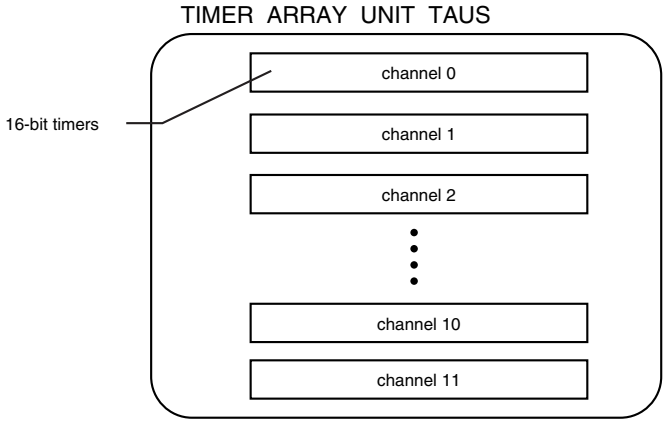

For details about each function, see the table below.

Independent channel operation function (explained in this chapter)	Simultaneous channel operation function (explained in this chapter)	Inverter control function (Refer to **CHAPTER 7 INVERTER CONTROL FUNCTIONS**)
• Interval timer (→ refer to **6.6.1**) • Square wave output (→ refer to **6.6.2**) • External event counter (→ refer to **6.6.3**) • Divider function[Note] (refer to **6.6.4**) • Input pulse interval measurement (→ refer to **6.6.5**) • Measurement of high-/low-level width of input signal (→ refer to **6.6.6**)	• One-shot pulse output (→refer to **6.7.1**) • PWM output (→refer to **6.7.2**) • Multiple PWM output (→refer to **6.7.3**)	• Real-time output function (type 1) • Real-time output function (type 2) • 6-phase PWM output function • Triangular wave PWM output function • Triangular wave PWM output function with dead time • 6-phase triangular wave PWM output function with dead time • Interrupt signal thinning function • A/D conversion trigger output function (type 1) • A/D conversion trigger output function (type 2) • Linked real-time output function (type 1) • Linked real-time output function (type 2) • Linked real-time output function (type 3) • Non-complementary modulation output function (type 1) • Non-complementary modulation output function (type 2) • Complementary modulation output function

Note 44-pin and 48-pin products of 78K0R/IC3, 78K0R/ID3, 78K0R/IE3 only.

Channel 7 can be used to realize LIN-bus reception processing in combination with UART0 of the serial array unit.

The presence or absence of timer I/O pins in each timer array unit channel depends on the product.

Table 6-1 Timer I/O Pins provided in Each Product

Timer I/O pins	I/O Pins of Each Product					
	78K0R/IB3	78K0R/IC3 (38-pin)	78K0R/IC3 (44-pin)	78K0R/IC3 (48-pin)	78K0R/ID3	78K0R/IE3
TI00	–	–	–	–	√	√
TI01	–	–	–	–	–	–
TI02	√	√	√	√	√	√
TI03	√	√	√	√	√	√
TI04	√	√	√	√	√	√
TI05	√	√	√	√	√	√
TI06	√	√	√	√	√	√
TI07	√	√	√	√	√	√
TI08	–	–	–	–	–	√
TI09	√	√	√	√	√	√
TI10	–	–	√	√	√	√
TI11	–	–	√	√	√	√
SLTI	–	√	√	√	√	√
TO00	–	–	–	–	√	√
TO01	–	–	–	–	–	–
TO02	√	√	√	√	√	√
TO03	√	√	√	√	√	√
TO04	√	√	√	√	√	√
TO05	√	√	√	√	√	√
TO06	√	√	√	√	√	√
TO07	√	√	√	√	√	√
TO08	–	–	–	–	–	√
TO09	–	–	–	–	–	√
TO10	–	√	√	√	√	√
TO11	√	√	√	√	√	√
SLTO	–	√	√	√	√	√

Remark The P52/SLTI/SLTO pin can be used as the timer I/O pin of channels 0, 1 and 8 to 11. Set the input switch control register (ISC) to select use of the P52/SLTI/SLTO pin as the I/O pin of channel 0, 1, or 8 to 11 . For details about the ISC register, see **6.3 (24) Input switch control register (ISC)**. The SLTI and SLTO pins are not provided in the 78K0R/IB3, so this function cannot be used in the 78K0R/IB3.

6.1 Functions of Timer Array Unit TAUS

Timer array unit TAUS has the following functions.

6.1.1 Independent channel operation function

By operating a channel independently, it can be used for the following purposes without being affected by the operation mode of other channels.

(1) Interval timer

Each timer of a unit can be used as a reference timer that generates an interrupt (INTTMn) at fixed intervals.

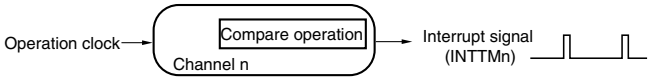

(2) Square wave output

A toggle operation is performed each time INTTMn is generated and a square wave with a duty factor of 50% is output from a timer output pin (TOn, SLTO).

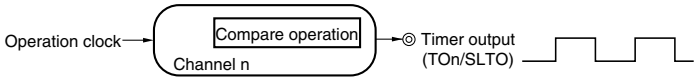

(3) External event counter

Each timer of a unit can be used as an event counter that generates an interrupt when the number of the valid edges of a signal input to the timer input pin (TIn, SLTI) has reached a specific value.

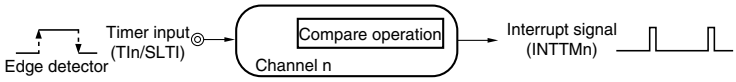

(4) Divider function (48-pin products of 78K0R/IC3, 78K0R/ID3, and 78K0R/IE3 only**)**

A clock input from a timer input pin (TIm) is divided and output from an output pin (TOm).

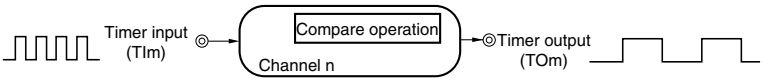

(5) Input pulse interval measurement

Counting is started by the valid edge of a pulse signal input to a timer input pin (TIn, SLTI). The count value of the timer is captured at the valid edge of the next pulse. In this way, the interval of the input pulse can be measured.

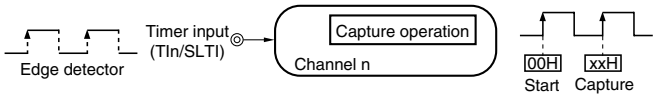

Remarks 1. n = 00, 02 to 11, m = 00, 10, 11

2. The presence or absence of timer I/O pins of Channel 0, 1 and 8 to 11 in each timer array unit channel depends on the product. see **Table 6-1 Timer I/O Pins provided in Each Product** for details.

(6) Measurement of high-/low-level width of input signal

Counting is started by a single edge of the signal input to the timer input pin (TIn, SLTI), and the count value is captured at the other edge. In this way, the high-level or low-level width of the input signal can be measured.

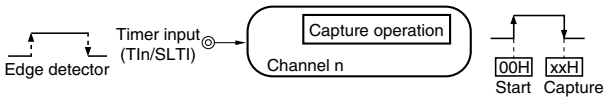

Remarks 1. n = 00, 02 to 11

2. The presence or absence of timer I/O pins of Channel 0, 1 and 8 to 11 in each timer array unit channel depends on the product. see **Table 6-1 Timer I/O Pins provided in Each Product for details**.

6.1.2 Simultaneous channel operation function

By using the combination of a master channel (a reference timer mainly controlling the cycle) and slave channels (timers operating according to the master channel), channels can be used for the following purposes.

Simultaneous channel operation functions can be used for the following purposes.

(1) One-shot pulse output

Two channels are used as a set to generate a one-shot pulse with a specified delay time and a specified pulse width.

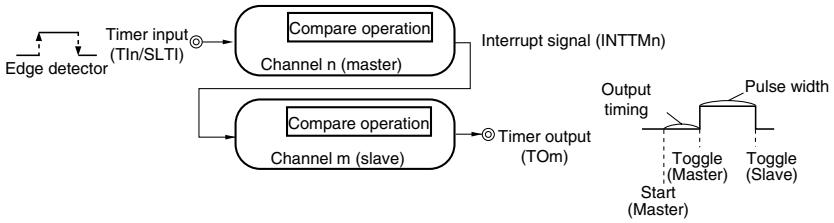

(2) PWM (Pulse Width Modulator) output

Two channels are used as a set to generate a pulse with a specified period and a specified duty factor.

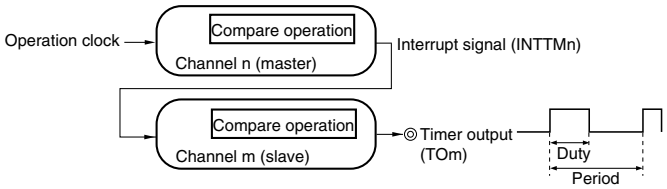

(3) Multiple PWM (Pulse Width Modulator) output

By extending the PWM function and using one master channel and two or more slave channels, up to eleven types of PWM signals that have a specific period and a specified duty factor can be generated.

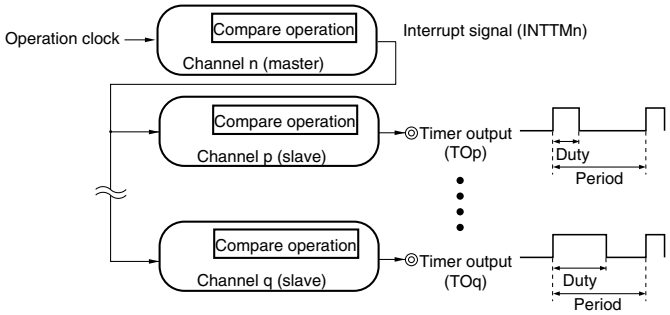

Caution The following rules apply when using multiple channels simultaneously.

- **Only an even-numbered channel (channel 0, 2, 4, …) can be specified as the master channel.**
- **Only channels with lower channel numbers than the master channel can be specified as slave channels (multiple slave channels can be set).**

For details about the rules of simultaneous channel operation function, see 6.4 Basic Rules of Simultaneous Channel Operation Function.

6.1.3 LIN-bus supporting function

Chanel 7 of Timer array unit TAUS is used to check whether signals received in LIN-bus communication match the LIN-bus communication format.

Note Timer channel 7 can be used for the LIN-bus function in all products of the 78K0R/Ix3.

Also, when RxD0 functions alternately as a timer input pin, the corresponding timer input pin channels can also be used for the LIN-bus function. The timer channels in each product of the 78K0R/Ix3 that can be used for the LIN-bus function in addition to timer channel 7 are shown below.

78K0R/IB3 (P11/RxD0/TI03/TO03)	: Channel 3 of TAUS
38-pin products of 78K0R/IC3 (P72/INTP6/RxD0)	: None
44-pin and 48-pin products of 78K0R/IC3, 78K0R/ID3, 78K0R/IE3 (P74/RxD0/TI10/SI00)	: Chanel 10 of TAUS

(1) Detection of wakeup signal

The timer starts counting at the falling edge of a signal input to the serial data input pin (RxD0) of UART0 and the count value of the timer is captured at the rising edge. In this way, a low-level width can be measured. If the low-level width is greater than a specific value, it is recognized as a wakeup signal.

(2) Detection of sync break field

The timer starts counting at the falling edge of a signal input to the serial data input pin (RxD0) of UART0 after a wakeup signal is detected, and the count value of the timer is captured at the rising edge. In this way, a low-level width is measured. If the low-level width is greater than a specific value, it is recognized as a sync break field.

(3) Measurement of pulse width of sync field

After a sync break field is detected, the low-level width and high-level width of the signal input to the serial data input pin (RxD0) of UART0 are measured. From the bit interval of the sync field measured in this way, a baud rate is calculated.

Remark For details about setting up the operations used to implement the LIN-bus, see **6.3 (24) Input switch control register (ISC)** and **6.7.5 Operation as input signal high-/low-level width measurement**.

6.2 Configuration of Timer Array Unit TAUS

Timer array unit TAUS includes the following hardware.

Table 6-2. Configuration of Timer Array Unit TAUS

Item	Configuration
Timer/counter	Timer counter register n (TCRn)
Register	Timer data register n (TDRn)
Timer input	TI00, TI02 to TI11, SLTI pins Note 1, RxD0 pin (for LIN-bus)
Timer output	TO00, TO02 to TO011, SLTO pins Note 1, output controller
Control registers	<Registers of unit setting block> • Peripheral enable register 2 (PER2) • Timer clock select register 0 (TPS0) • Timer channel enable status register 0 (TE0) • Timer channel start register 0 (TS0) • Timer channel stop register 0 (TT0) • Timer input select register 0 (TIS0) Note 2 • Timer output enable register 0 (TOE0) • Timer output register 0 (TO0) • Timer output level register 0 (TOL0) • Timer output mode register 0 (TOM0) • Timer triangle wave output mode register 0 (TOT0) Note 3 • Timer dead time output enable register 0 (TDE0) Note 3 • Timer real-time output register 0 (TRO0) Note 3 • Timer real-time output enable register 0 (TRE0) Note 3 • Timer real-time control register 0 (TRC0) Note 3 • Timer modulation output enable register 0 (TME0) Note 3 • TAU option mode register (OPMR) Note 3 • TAU option status register (OPSR) Note 3 • TAU option Hi-Z start trigger register (OPHS) Note 3 • TAU option Hi-Z stop trigger register (OPHT) Note 3 • TAU option control register (OPCR) Note 3
	<Registers of each channel> • Timer mode register n (TMRn) • Timer status register n (TSRn) • Input switch control register (ISC) • Noise filter enable registers 1, 2 (NFEN1, NFEN2) • Port mode registers 0, 1, 3, 5, 7 (PM0, PM1, PM3, PM5, PM7) Note 4 • Port registers 0, 1, 3, 5, 7 (P0, P1, P3, P5, P7) Note 4

Notes 1. The presence or absence of timer I/O pins of Chaneel0, 1 and 8 to 11 in each timer array unit channel depends on the product. see **Table 6-1 Timer I/O Pins provided in Each Product for details**.

2. This is not provided in the 78K0R/IB3.

3. Registers are used with the inverter control function. For details, refer to **CHAPTER 7 INVERTER CONTROL FUNCTIONS**.

4. The PM0 and P0 registers are only provided in the 78K0R/ID3 and 78K0R/IE3. The PM7 and P7 registers are not provided in the 78K0R/IB3.

Remark n: Channel number (n = 00 to 11)

• Timer I/O pin configuration

The P52/SLTI/SLTO pin can be used as the timer I/O pin of channels 0, 1, and 8 to 11. Set the input switch control register (ISC) to select use of the P52/SLTI/SLTO pin as the I/O pin of channel 0, 1, and 8 to 11. For details about the ISC register, see **6.3 (24) Input switch control register (ISC)**.

The following I/O pins can be selected for channels 0, 1, and 8 to 11.

The SLTI and SLTO pins are not provided in the 78K0R/IB3, so this function cannot be used in the 78K0R/IB3.

Table 6-3. I/O Pins That Can Be Selected for Channels 0, 1, and 8 to 11 (78K0R/IC3)

Channel for Which I/O Pin Can Be Selected	Input Pin	Output Pin
Channel 0	P52/SLTI/SLTO pin	P52/SLTI/SLTO pin
Channel 1	P52/SLTI/SLTO pin	P52/SLTI/SLTO pin
Channel 8	P52/SLTI/SLTO pin	P52/SLTI/SLTO pin
Channel 9	• P31/TI09 pin • P52/SLTI/SLTO pin	P52/SLTI/SLTO pin
Channel 10	• P74/TI10 pin • P52/SLTI/SLTO pin	• P73/TO10 pin • P52/SLTI/SLTO pin
Channel 11	• P75/TI11 pin • P52/SLTI/SLTO pin	• P30/TO11 pin • P52/SLTI/SLTO pin

Table 6-4. I/O Pins That Can Be Selected for Channels 0, 1, and 8 to 11 (78K0R/ID3)

Channel for Which I/O Pin Can Be Selected	Input Pin	Output Pin
Channel 0	• P00/TI00 pin • P52/SLTI/SLTO pin	• P01/TO00 pin • P52/SLTI/SLTO pin
Channel 1	P52/SLTI/SLTO pin	P52/SLTI/SLTO pin
Channel 8	P52/SLTI/SLTO pin	P52/SLTI/SLTO pin
Channel 9	• P31/TI09 pin • P52/SLTI/SLTO pin	P52/SLTI/SLTO pin
Channel 10	• P74/TI10 pin • P52/SLTI/SLTO pin	• P73/TO10 pin • P52/SLTI/SLTO pin
Channel 11	• P75/TI11 pin • P52/SLTI/SLTO pin	• P30/TO11 pin • P52/SLTI/SLTO pin

(Caution and **Remark** are listed on the next page.**)**

Table 6-5. I/O Pins That Can Be Selected for Channels 0, 1, and 8 to 11 (78K0R/IE3)

Channel for Which I/O Pin Can Be Selected	Input Pin	Output Pin
Channel 0	• P00/TI00 pin • P52/SLTI/SLTO pin	• P01/TO00 pin • P52/SLTI/SLTO pin
Channel 1	P52/SLTI/SLTO pin	P52/SLTI/SLTO pin
Channel 8	• P16/TI08 pin • P52/SLTI/SLTO pin	• P16/TO08 pin • P52/SLTI/SLTO pin
Channel 9	• P17/TI09 pin • P52/SLTI/SLTO pin	• P17/TO09 pin • P52/SLTI/SLTO pin
Channel 10	• P74/TI10 pin • P52/SLTI/SLTO pin	• P73/TO10 pin • P52/SLTI/SLTO pin
Channel 11	• P75/TI11 pin • P52/SLTI/SLTO pin	• P30/TO11 pin • P52/SLTI/SLTO pin

Caution Hereinafter, timer I/O pins are described as TIn and TOn (n = xx), which also includes the selection of the SLTI and SLTO pins.

Remarks 1. When timer input and timer output are shared by the same pin, either only timer input or only timer output can be used.

2. Only one of the above-mentioned channels can be assigned as the timer I/O pin for the P52/SLTI/SLTO pin.

3. The SLTI and SLTO pins cannot be selected as timer I/Os for channels other than those mentioned above (channels 2 to 7).

Figures 6-1 and 6-2 show the block diagram of timer array unit TAUS.

Figure 6-1. Entire Configuration of Timer Array Unit TAUS (Example: 78K0R/IE3)

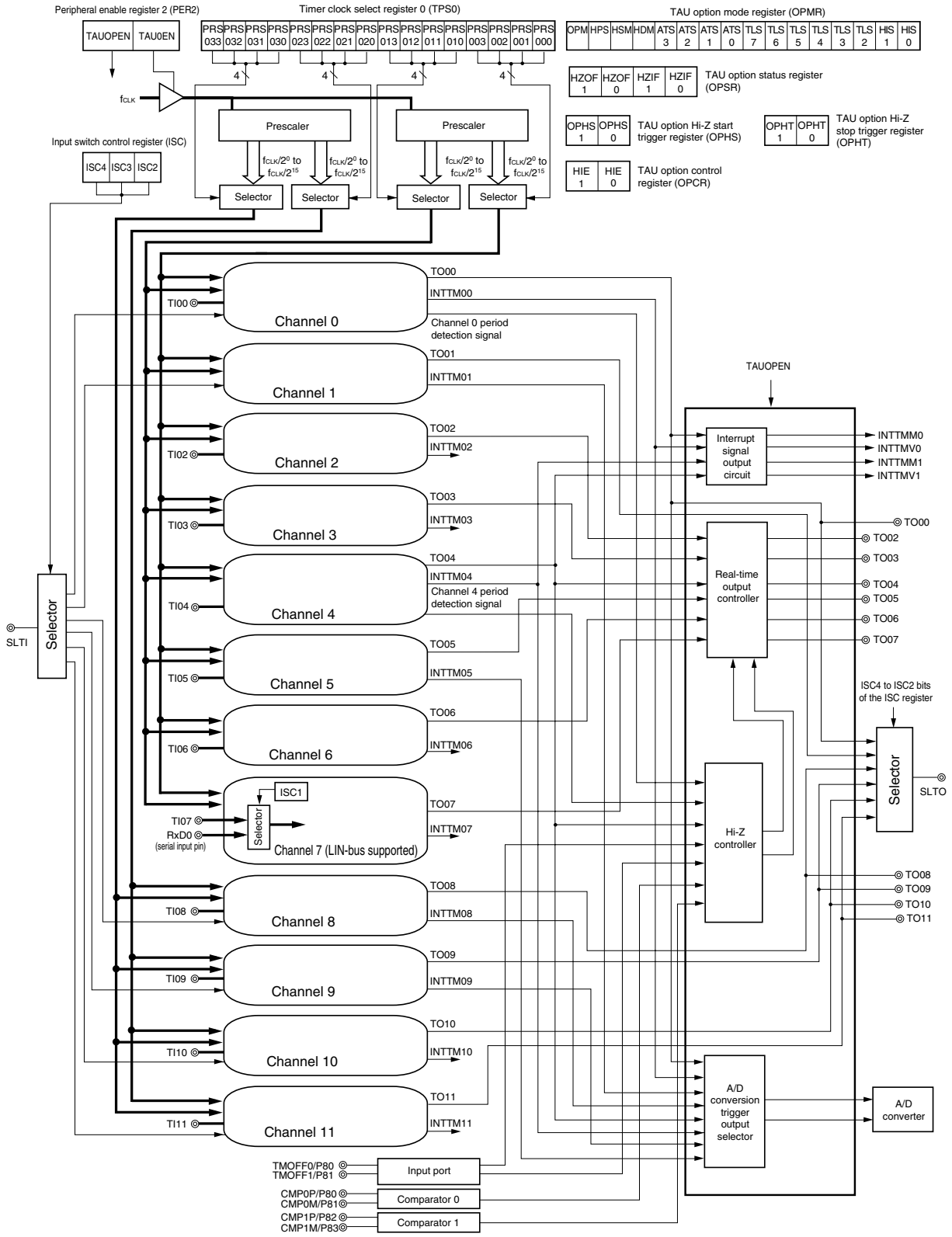

Remark The configuration diagram in Figure 6-1 also includes the registers and pins used with the inverter control function. For details of the inverter control function, refer to **CHAPTER 7 INVERTER CONTROL FUNCTIONS**.

Figure 6-2. Block Diagram of Each Channel (Example: Channel 4 of the 78K0R/IE3)

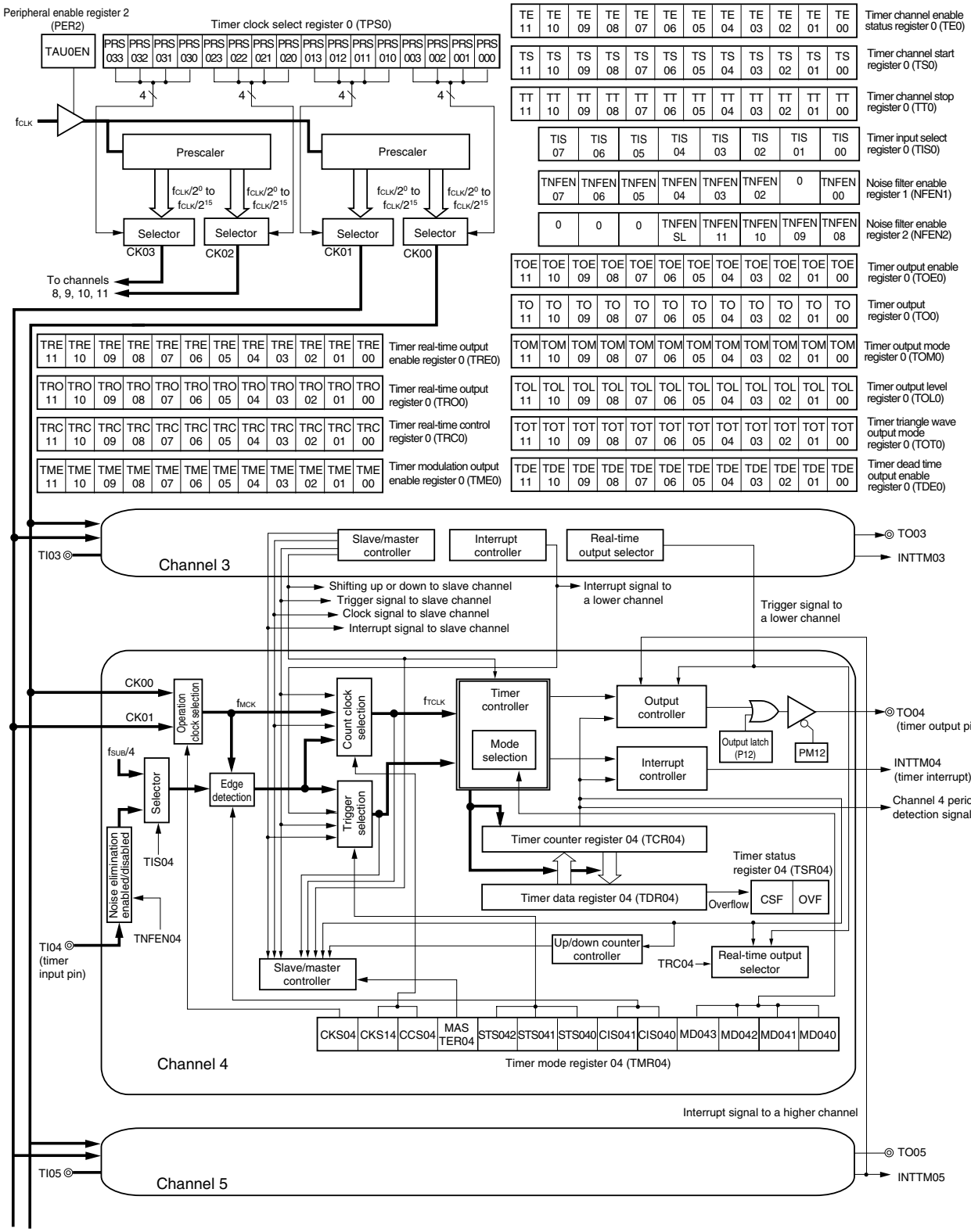

Remark The block diagram in Figure 6-2 also includes the registers and pins used with the inverter control function. For details of the inverter control function, refer to **CHAPTER 7 INVERTER CONTROL FUNCTIONS**.

(1) Timer counter register n (TCRn)

TCRn is a 16-bit read-only register and is used to count clocks.

The value of this counter is incremented or decremented in synchronization with the rising edge of a count clock.

Whether the counter is incremented or decremented depends on the operation mode that is selected by the MDn4 to MDn0 bits of TMRn (see **6.3 (3) Timer mode register n (TMRn)**).

Figure 6-3. Format of Timer Counter Register n (TCRn)

Address: F0180H, F0181H (TCR00) to F018EH, F018FH (TCR07) After reset: FFFFH R
F01C0H, F01C1H (TCR08) to F01C6H, F01C7H (TCR11)

	F0181H (TCR00)								F0180H (TCR00)							
	15	14	13	12	11	10	9	8	7	6	5	4	3	2	1	0
TCRn																

(n = 00 to 11)

The count value can be read by reading TCRn.

The count value is set to FFFFH in the following cases.

- When the reset signal is generated
- When the TAU0EN bit of peripheral enable register 2 (PER2) is cleared

The count value is cleared to 0000H in the following cases.

- When the start trigger is input in the capture mode
- When capturing has been completed in the capture mode

Caution The count value is not captured to TDRn even when TCRn is read.

The TCRn register read value differs as follows according to operation mode changes and the operating status.

Table 6-4. TCRn Register Read Value in Various Operation Modes

Operation Mode	Count Mode	TCRn Register Read Value[Note 1]			
		Value if the operation mode was changed after releasing reset	Value if the operation mode was changed after count operation paused (TTn = 1)	Value if the operation was restarted after count operation paused (TTn = 1)	Value when waiting for a start trigger after one count
Interval timer mode	Count down	FFFFH	Undefined	Stop value	–
Capture mode	Count up	0000H	Undefined	Stop value	–
Event counter mode	Count down	FFFFH	Undefined	Stop value	–
One-count mode	Count down	FFFFH	Undefined	Stop value	FFFFH
Capture & one-count mode	Count up	0000H	Undefined	Stop value	Capture value of TDRn register + 1
Up and down count mode[Note 2]	Count down and up	FFFFH	Undefined	Stop value	–

Notes 1. This indicates the value read from the TCRn register when channel n has stopped operating as a timer (TEn = 0) and has been enabled to operate as a counter (TSn = 1). The read value is held in the TCRn register until the count operation starts.

2. These operation modes are used with the inverter control function. For the inverter control function, refer to **CHAPTER 7 INVERTER CONTROL FUNCTIONS**.

Remark n = 00 to 11

(2) Timer data register n (TDRn)

This is a 16-bit register from which a capture function and a compare function can be selected.

The capture or compare function can be switched by selecting an operation mode by using the MDn4 to MDn0 bits of TMRn.

The value of TDRn can be changed at any time.

This register can be read or written in 16-bit units.

Reset signal generation clears TDRn to 0000H.

Figure 6-4. Format of Timer Data Register n (TDRn)

Address: FFF18H, FFF19H (TDR00), FFF1AH, FFF1BH (TDR01), FFF64H, FFF65H (TDR02) to FFF76H, FFF77H (TDR11) After reset: 0000H R/W

	FFF19H (TDR00)								FFF18H (TDR00)							
	15	14	13	12	11	10	9	8	7	6	5	4	3	2	1	0
TDRn																

(n = 00 to 11)

(i) When TDRn is used as compare register

Counting down is started from the value set to TDRn. When the count value reaches 0000H, an interrupt signal (INTTMn) is generated. TDRn holds its value until it is rewritten.

Caution TDRn does not perform a capture operation even if a capture trigger is input, when it is set to the compare function.

(ii) When TDRn is used as capture register

The count value of TCRn is captured to TDRn when the capture trigger is input.

A valid edge of the TIn pin can be selected as the capture trigger. This selection is made by TMRn.

Remark n = 00 to 11 (Timer input pin (TIn) of 78K0R/IB3: n = 02 to 07 and 09)

6.3 Registers Controlling Timer Array Unit TAUS

Timer array unit TAUS is controlled by the following registers.

- Peripheral enable register 2 (PER2)
- Timer clock select register 0 (TPS0)
- Timer mode register n (TMRn)
- Timer status register n (TSRn)
- Timer channel enable status register 0 (TE0)
- Timer channel start register 0 (TS0)
- Timer channel stop register 0 (TT0)
- Timer input select register 0 (TIS0) Note 1
- Timer output enable register 0 (TOE0)
- Timer output register 0 (TO0)
- Timer output level register 0 (TOL0)
- Timer output mode register 0 (TOM0)
- Timer triangle wave output mode register 0 (TOT0) Note 2
- Timer dead time output enable register 0 (TDE0) Note 2
- Timer real-time output register 0 (TRO0) Note 2
- Timer real-time output enable register 0 (TRE0) Note 2
- Timer real-time control register 0 (TRC0) Note 2
- Timer modulation output enable register 0 (TME0) Note 2
- TAU option mode register (OPMR) Note 2
- TAU option status register (OPSR) Note 2
- TAU option Hi-Z start trigger register (OPHS) Note 2
- TAU option Hi-Z stop trigger register (OPHT) Note 2
- TAU option control register (OPCR) Note 2
- Input switch control registers (ISC)
- Noise filter enable registers 1, 2 (NFEN1, NFEN2)
- Port mode registers 0, 1, 3, 5, 7 (PM0, PM1, PM3, PM5, PM7) Note3
- Port registers 0, 1, 3, 5, 7 (P0, P1, P3, P5, P7) Note3

Notes 1. This is not provided in the 78K0R/IB3.

2. registers are used with the inverter control function. For details, refer to **CHAPTER 7 INVERTER CONTROL FUNCTIONS**.

3. The PM0 and P0 registers are only provided in the 78K0R/ID3 and 78K0R/IE3. The PM7 and P7 registers are not provided in 78K0R/IB3.

Remark n = 00 to 11

(1) Peripheral enable register 2 (PER2)

This register is used to enable or disable supplying the clock to the peripheral hardware. Clock supply to a hardware macro that is not used is stopped in order to reduce the power consumption and noise.

When timer array unit TAUS is used, be sure to set bit 0 (TAU0EN) of this register to 1.

When the inverter control function is used, be sure to set bit 1 (TAUOPEN) to 1. (For details of the inverter control function, refer to **CHAPTER 7 INVERTER CONTROL FUNCTIONS**.)

PER2 can be set by a 1-bit or 8-bit memory manipulation instruction.

Reset signal generation clears PER2 to 00H.

Figure 6-5. Format of Peripheral Enable Register 2 (PER2)

Address: F00F2H After reset: 00H R/W

Symbol	7	6	5	4	3	2	<1>	<0>
PER2	0	0	0	0	0	0	TAUOPEN	TAU0EN

TAU0EN	Control of timer array unit TAUS input clock
0	Stops input clock supply. • SFR used by timer array unit TAUS cannot be written. • Timer array unit TAUS is in the reset status.
1	Enables input clock supply. • SFR used by timer array unit TAUS can be read/written.

TAUOPEN	Control of inverter control block input clock
0	Stops input clock supply. • SFR used by the inverter control block cannot be written. • The inverter control block is in the reset status.
1	Enables input clock supply. • SFR used by the inverter control block can be read/written.

Cautions 1. When setting timer array unit TAUS, be sure to set TAU0EN to 1 first. If TAU0EN = 0, writing to a control register of timer array unit TAUS is ignored, and all read values are default values (except for timer input select register 0 (TIS0), input switch control register (ISC), noise filter enable registers 1, 2 (NFEN1, NFEN2), port mode registers 0, 1, 3, 5, 7 (PM0, PM1, PM3, PM5, PM7), port registers 0, 1, 3, 5, 7 (P0, P1, P3, P5, P7)). Similarly, when using the inverter control function, set TAUOPEN to 1 first.

2. Be sure to clear bits 2 to 7 of the PER2 register to 0.

(2) Timer clock select register 0 (TPS0)

TPS0 is a 16-bit register that is used to select four types of operation clocks (CK00, CK01, CK02, CK03) that are commonly supplied to each channel.

The operation clocks that can be set with each bit are as follows.

PRS000 to PRS003: CK00 (settable to timer channels 00 to 07)
PRS010 to PRS013: CK01 (settable to timer channels 00 to 07)
PRS020 to PRS023: CK02 (settable to timer channels 08 to 11)
PRS030 to PRS033: CK03 (settable to timer channels 08 to 11)

Rewriting of TPS0 during timer operation is possible only in the following cases.

If the PRS000 to PRS003 bits can be rewritten:
All channels for which CK00 is selected as the operation clock (CKSn = 0) are stopped (TEn = 0) (n = 00 to 07).
If the PRS010 to PRS013 bits can be rewritten:
All channels for which CK01 is selected as the operation clock (CKSn = 1) are stopped (TEn = 0) (n = 00 to 07).
If the PRS020 to PRS023 bits can be rewritten:
All channels for which CK02 is selected as the operation clock (CKSn = 0) are stopped (TEn = 0) (n = 08 to 11).
If the PRS030 to PRS033 bits can be rewritten:
All channels for which CK03 is selected as the operation clock (CKSn = 1) are stopped (TEn = 0) (n = 08 to 11).

TPS0 can be set by a 16-bit memory manipulation instruction.

Reset signal generation clears this register to 0000H.

Figure 6-6. Format of Timer Clock Select Register 0 (TPS0)

Address: F01B6H, F01B7H After reset: 0000H R/W

Symbol	15	14	13	12	11	10	9	8	7	6	5	4	3	2	1	0
TPS0	PRS 033	PRS 032	PRS 031	PRS 030	PRS 023	PRS 022	PRS 021	PRS 020	PRS 013	PRS 012	PRS 011	PRS 010	PRS 003	PRS 002	PRS 001	PRS 000

PRS 0m3	PRS 0m2	PRS 0m1	PRS 0m0	Selection of operation clock (CK0m) Note				
					f_{CLK} = 5 MHz	f_{CLK} = 10 MHz	f_{CLK} = 20 MHz	f_{CLK} = 40 MHz
0	0	0	0	f_{CLK}	5 MHz	10 MHz	20 MHz	40 MHz
0	0	0	1	$f_{CLK}/2$	2.5 MHz	5 MHz	10 MHz	20 MHz
0	0	1	0	$f_{CLK}/2^2$	1.25 MHz	2.5 MHz	5 MHz	10 MHz
0	0	1	1	$f_{CLK}/2^3$	625 kHz	1.25 MHz	2.5 MHz	5 MHz
0	1	0	0	$f_{CLK}/2^4$	312.5 kHz	625 kHz	1.25 MHz	2.5 MHz
0	1	0	1	$f_{CLK}/2^5$	156.2 kHz	312.5 kHz	625 kHz	1.25 MHz
0	1	1	0	$f_{CLK}/2^6$	78.1 kHz	156.2 kHz	312.5 kHz	625 kHz
0	1	1	1	$f_{CLK}/2^7$	39.1 kHz	78.1 kHz	156.2 kHz	312.5 kHz
1	0	0	0	$f_{CLK}/2^8$	19.5 kHz	39.1 kHz	78.1 kHz	156.2 kHz
1	0	0	1	$f_{CLK}/2^9$	9.76 kHz	19.5 kHz	39.1 kHz	78.1 kHz
1	0	1	0	$f_{CLK}/2^{10}$	4.88 kHz	9.76 kHz	19.5 kHz	39.1 kHz
1	0	1	1	$f_{CLK}/2^{11}$	2.44 kHz	4.88 kHz	9.76 kHz	19.5 kHz
1	1	0	0	$f_{CLK}/2^{12}$	1.22 kHz	2.44 kHz	4.88 kHz	9.76 kHz
1	1	0	1	$f_{CLK}/2^{13}$	610 Hz	1.22 kHz	2.44 kHz	4.88 kHz
1	1	1	0	$f_{CLK}/2^{14}$	305 Hz	610 Hz	1.22 kHz	2.44 kHz
1	1	1	1	$f_{CLK}/2^{15}$	153 Hz	305 Hz	610 Hz	1.22 kHz

Note When changing the clock selected for f_{CLK} (by changing the system clock control register (CKC) value), stop timer array unit TAUS (TT0 = 00FFH).

Remarks 1. f_{CLK}: CPU/peripheral hardware clock frequency

2. m = 0 to 3

(3) Timer mode register n (TMRn)

TMRn sets an operation mode of channel n. It is used to select an operation clock (f_{MCK}), a count clock, whether the timer operates as the master or a slave, a start trigger and a capture trigger, the valid edge of the timer input, and an operation mode (interval, capture, event counter, one-count, capture & one-count, or up and down count[Note]).

Rewriting TMRn is prohibited when the register is in operation (when TE0 = 1). However, bits 7 and 6 (CISn1, CISn0) can be rewritten even while the register is operating with some functions (when TE0 = 1) (for details, see **6.7 Independent Channel Operation Function of Timer Array Unit TAUS** and **6.8 Simultaneous Channel Operation Function of Timer Array Unit TAUS**).

TMRn can be set by a 16-bit memory manipulation instruction.

Reset signal generation clears TMRn to 0000H.

Note These modes are used with the inverter control function. For the inverter control function, refer to **CHAPTER 7 INVERTER CONTROL FUNCTIONS**.

Figure 6-7. Format of Timer Mode Register n (TMRn) (1/3)

Address: F0190H, F0191H (TMR00) to F019EH, F019FH (TMR07) After reset: 0000H R/W
F01C8H, F01C9H (TMR08) to F01CEH, F01CFH (TMR11)

Symbol	15	14	13	12	11	10	9	8	7	6	5	4	3	2	1	0
TMRn	CKSn	0	CCS1n	CCS0n	MASTERn	STSn2	STSn1	STSn0	CISn1	CISn0	0	MDn4	MDn3	MDn2	MDn1	MDn0

CKSn	Selection of operation clock (f_{MCK}) of channel n
0	Operation clock CK00 set by timer clock select register 0 (TPS0) : timer channels 0 to 7 Operation clock CK02 set by timer clock select register 0 (TPS0) : timer channels 8 to 11
1	Operation clock CK01 set by timer clock select register 0 (TPS0) : timer channels 0 to 7 Operation clock CK03 set by timer clock select register 0 (TPS0) : timer channels 8 to 11
Operation clock (f_{MCK}) is used by the edge detector. A sampling clock and a count clock (f_{TCLK}) are generated depending on the setting of the CCS1n and CCS0n bits.	

CCS1n	CCS0n	Selection of count clock (f_{TCLK}) of channel n
0	0	Operation clock (f_{MCK}) specified by CKSn bit
0	1	Valid edge of input signal input from TIn pin/subsystem clock divided by 4 (f_{SUB}/4)
1	0	Selects master channel count clock (when the channel is used as a slave channel with the simultaneous channel operation functions)[Note].
1	1	Selects master channel interrupt signal (when the channel is used as a slave channel with the simultaneous channel operation functions)[Note].
Count clock (f_{TCLK}) is used for the timer/counter, output controller, and interrupt controller.		

Note These settings are used with the inverter control function. For the inverter control function, refer to **CHAPTER 7 INVERTER CONTROL FUNCTIONS**.

Caution Be sure to clear bits 14 and 5 to "0".

Remark n = 00 to 11 (Timer input pin (TIn) of 78K0R/IB3: n = 02 to 07 and 09).

Figure 6-7. Format of Timer Mode Register n (TMRn) (2/3)

Address: F0190H, F0191H (TMR00) to F019EH, F019FH (TMR07) After reset: 0000H R/W
F01C8H, F01C9H (TMR08) to F01CEH, F01CFH (TMR11)

Symbol	15	14	13	12	11	10	9	8	7	6	5	4	3	2	1	0
TMRn	CKSn	0	CCS1n	CCS0n	MASTERn	STSn2	STSn1	STSn0	CISn1	CISn0	0	MDn4	MDn3	MDn2	MDn1	MDn0

MASTERn	Selection between using channel n independently or simultaneously with another channel (as a slave or master)
0	Operates in Independent channel operation function or as slave channel in smultaneous channel operation function.
1	Operates as master channel in simultaneous channel operation function.
Only the even channel can be set as a master channel (MASTERn = 1). Be sure to use odd-numbered channels as slave channels (MASTERn = 0). Clear MASTERn to 0 for a channel that is used with the independent channel operation function.	

STSn2	STSn1	STSn0	Setting of start trigger or capture trigger of channel n
0	0	0	Only software trigger start is valid (other trigger sources are unselected).
0	0	1	Valid edge of TIn pin input is used as both the start trigger and capture trigger.
0	1	0	Both the edges of TIn pin input are used as a start trigger and a capture trigger.
1	0	0	Interrupt signal of the master channel is used (when the channel is used as a slave channel with the simultaneous channel operation function).
1	1	0	The trigger of the dead time control trigger generation channel is used[Note].
1	1	1	The up and down control trigger of the master channel is used[Note].
Other than above			Setting prohibited

CISn1	CISn0	Selection of TIn pin input valid edge
0	0	Falling edge
0	1	Rising edge
1	0	Both edges (when low-level width is measured) Start trigger: Falling edge, Capture trigger: Rising edge
1	1	Both edges (when high-level width is measured) Start trigger: Rising edge, Capture trigger: Falling edge
If both the edges are specified when the value of the STSn2 to STSn0 bits is other than 010B, set the CISn1 to CISn0 bits to 10B.		

Note These settings are used with the inverter control function. For the inverter control function, refer to **CHAPTER 7 INVERTER CONTROL FUNCTIONS**.

Remark n = 00 to 11 (Timer input pin (TIn) of 78K0R/IB3: n = 02 to 07 and 09)

Figure 6-7. Format of Timer Mode Register n (TMRn) (3/3)

Address: F0190H, F0191H (TMR00) to F019EH, F019FH (TMR07) After reset: 0000H R/W
F01C8H, F01C9H (TMR08) to F01CEH, F01CFH (TMR11)

Symbol	15	14	13	12	11	10	9	8	7	6	5	4	3	2	1	0
TMRn	CKSn	0	CCS1n	CCS0n	MASTERn	STSn2	STSn1	STSn0	CISn1	CISn0	0	MDn4	MDn3	MDn2	MDn1	MDn0

MDn4	MDn3	MDn2	MDn1	MDn0	Operation mode of channel n	Count operation of TCR	Independent operation
0	0	0	0	1/0	Interval timer mode	Counting down	Possible
0	0	1	0	1/0	Capture mode	Counting up	Possible
0	0	1	1	0	Event counter mode	Counting down	Possible
0	1	0	0	1/0	One-count mode	Counting down	Impossible
0	1	1	0	0	Capture & one-count mode	Counting up	Possible
1	0	0	1	0	Up and down count mode[Note 1]	Counting up and down	Impossible
Other than above					Setting prohibited		
The operation of the MDn0 bit varies depending on each operation mode (see table below).							

Operation mode (Value set by the MDn4 to MDn1 bits (see table above))	MDn0	Setting of starting counting and interrupt
• Interval timer mode (0, 0, 0, 0) • Capture mode (0, 0, 1, 0)	0	Timer interrupt is not generated when counting is started (timer output does not change, either).
	1	Timer interrupt is generated when counting is started (timer output also changes).
• Event counter mode (0, 0, 1, 1) • Up and down count mode[Note 1] (1, 0, 0, 1)	0	Timer interrupt is not generated when counting is started (timer output does not change, either).
• One-count mode[Note 2] (0, 1, 0, 0)	0	Start trigger is invalid during counting operation. At that time, interrupt is not generated, either.
	1	Start trigger is valid during counting operation[Note 3]. At that time, interrupt is also generated.
• Capture & one-count mode (0, 1, 1, 0)	0	Timer interrupt is not generated when counting is started (timer output does not change, either). Start trigger is invalid during counting operation. At that time, interrupt is not generated, either.
Other than above		Setting prohibited

Notes 1. These settings are used with the inverter control function. For the inverter control function, refer to **CHAPTER 7 INVERTER CONTROL FUNCTIONS**.

2. In one-count mode, interrupt output (INTTMn) when starting a count operation and TOn output are not controlled.

3. If the start trigger (TSn = 1) is issued during operation, the counter is cleared, an interrupt is generated, and recounting is started.

Remark n = 00 to 11

(4) Timer status register n (TSRn)

TSRn indicates the overflow status of the counter of channel n.

TSRn is valid only in the capture mode (MDn4 to MDn1 = 0010B) and capture & one-count mode (MDn4 to MDn1 = 0110B). It will not be set in any other mode.

Furthermore, CSF is valid only in the up and down count mode (MDn4 to MDn1 = 1001B)[Note 1]. It will not be set in any other mode.

See Table 6-5 for the operation of the OVF bit in each operation mode and set/clear conditions.

TSRn can be read by a 16-bit memory manipulation instruction.

Reset signal generation clears TSRn to 0000H.

Figure 6-8. Format of Timer Status Register n (TSRn)

Address: F01A0H, F01A1H (TSR00) to F01AEH, F01AFH (TSR07) After reset: 0000H R
F01D0H, F01D1H (TSR08) to F01D6H, F01D7H (TSR11)

Symbol	15	14	13	12	11	10	9	8	7	6	5	4	3	2	1	0
TSRn	0	0	0	0	0	0	0	0	0	0	0	0	0	0	CSF Notes 1, 2	OVF

CSF Notes 1, 2	Count-up or count-down status of count clock (up and down count mode only)
0	Indicates that the count clock is counting up.
1	Indicates that the count clock is counting down.

OVF	Counter overflow status of channel n (capture mode and capture & one-count mode only)
0	Overflow does not occur.
1	Overflow occurs.
When OVF = 1, this flag is cleared (OVF = 0) when the next value is captured without overflow.	

Notes 1. This operation mode or bit is used with the inverter control function. For the inverter control function, refer to **CHAPTER 7 INVERTER CONTROL FUNCTIONS**.

2. Channel 0, which does not have a higher channel, is always fixed to “0”, because CSF is generated based on the up/down signal of the higher master channel.

Table 6-5. OVF Bit Operation and Set/Clear Conditions in Each Operation Mode

Timer operation mode	OVF	Set/clear conditions
• Capture mode • Capture & one-count mode	clear	When no overflow has occurred upon capturing
	set	When an overflow has occurred upon capturing
• Interval timer mode • Event counter mode • One-count mode • Up and down count mode[Note]	clear	–
	set	(Use prohibited, not set and not cleared)

Note These operation modes are used with the inverter control function. For details, refer to **CHAPTER 7 INVERTER CONTROL FUNCTIONS**.

Remark The OVF bit does not change immediately after the counter has overflowed, but changes upon the subsequent capture.

(5) Timer channel enable status register 0 (TE0)

TE0 is used to enable or stop the timer operation of each channel.

When a bit of timer channel start register 0 (TS0) is set to 1, the corresponding bit of this register is set to 1.

When a bit of timer channel stop register 0 (TT0) is set to 1, the corresponding bit of this register is cleared to 0.

TE0 can be read by a 16-bit memory manipulation instruction.

Reset signal generation clears TE0 to 0000H.

Figure 6-9. Format of Timer Channel Enable Status Register 0 (TE0)

Address: F01B0H, F01B1H After reset: 0000H R

Symbol	15	14	13	12	11	10	9	8	7	6	5	4	3	2	1	0
TE0	0	0	0	0	TE11	TE10	TE09	TE08	TE07	TE06	TE05	TE04	TE03	TE02	TE01	TE00

TEn	Indication of operation enable/stop status of channel n
0	Operation is stopped.
1	Operation is enabled.

Remark n = 00 to 11

(6) Timer channel start register 0 (TS0)

TS0 is a trigger register that is used to clear a timer counter (TCRn) and start the counting operation of each channel.

When a bit (TSn) of this register is set to 1, the corresponding bit (TEn) of timer channel enable status register 0 (TE0) is set to 1. The TSn bit is immediately cleared when operation is enabled (TEn = 1), because it is a trigger bit.

TS0 can be set by a 16-bit memory manipulation instruction.

Reset signal generation clears TS0 to 0000H.

Figure 6-10. Format of Timer Channel Start Register 0 (TS0)

Address: F01B2H, F01B3H After reset: 0000H R/W

Symbol	15	14	13	12	11	10	9	8	7	6	5	4	3	2	1	0
TS0	0	0	0	0	TS11	TS10	TS09	TS08	TS07	TS06	TS05	TS04	TS03	TS02	TS01	TS00

TSn	Operation enable (start) trigger of channel n
0	No trigger operation
1	TEn is set to 1 and the count operation becomes enabled. The TCRn count operation start in the count operation enabled state varies depending on each operation mode (see Table 6-6).

Caution Be sure to clear bits 15 to 12 to "0".

Remarks 1. When the TS0 register is read, 0 is always read.

2. n = 00 to 11

Table 6-6. Operations from Count Operation Enabled State to TCRn Count Start (1/2)

Timer operation mode	Operation when TSn = 1 is set
• Interval timer mode	No operation is carried out from start trigger detection (TSn = 1) until count clock generation. The first count clock loads the value of TDRn to TCRn and the subsequent count clock performs count down operation (see **6.3 (6) (a) Start timing in interval timer mode and up and down count mode**).
• Event counter mode	Writing 1 to TSn bit loads the value of TDRn to TCRn. The subsequent count clock performs count down operation. The external trigger detection selected by STSn2 to STSn0 bits in the TMRn register does not start count operation (see **6.3 (6) (b) Start timing in event counter mode**).
• Capture mode	No operation is carried out from start trigger detection until count clock generation. The first count clock loads 0000H to TCRn and the subsequent count clock performs count up operation (see **6.3 (6) (c) Start timing in capture mode**).

Table 6-6. Operations from Count Operation Enabled State to TCRn Count Start (2/2)

Timer operation mode	Operation when TSn = 1 is set
• One-count mode	The waiting-for-start-trigger state is entered by writing 1 to the TSn bit while the timer is stopped (TEn = 0). No operation is carried out from start trigger detection until count clock generation. The first count clock loads the value of TDRn to TCRn and the subsequent count clock performs count down operation (see **6.3 (6) (d) Start timing in one-count mode**).
• Capture & one-count mode	The waiting-for-start-trigger state is entered by writing 1 to the TSn bit while the timer is stopped (TEn = 0). No operation is carried out from start trigger detection until count clock generation. The first count clock loads 0000H to TCRn and the subsequent count clock performs count up operation (see **6.3 (6) (e) Start timing in capture & one-count mode**).
• Up and down count mode[Note]	No operation is carried out from start trigger detection (TSn = 1) until count clock generation. The first count clock loads the value of TDRn to TCRn and the subsequent count clock performs count down operation (see **6.3 (6) (a) Start timing in interval timer mode and up and down count mode**).

Note These operation modes are used with the inverter control function. For the inverter control function, refer to **CHAPTER 7 INVERTER CONTROL FUNCTIONS**.

(a) Start timing in interval timer mode and up and down count mode[Note]

<1> Operation is enabled (TEn = 1) by writing 1 to the TSn bit.
<2> The write data to TSn is held until count clock generation.
<3> TCRn holds the initial value until count clock generation.
<4> On generation of count clock, the value of TDRn is loaded to TCRn and count starts.

Figure 6-11. Start Timing (In Interval Timer Mode and Up and Down Count Mode[Note])

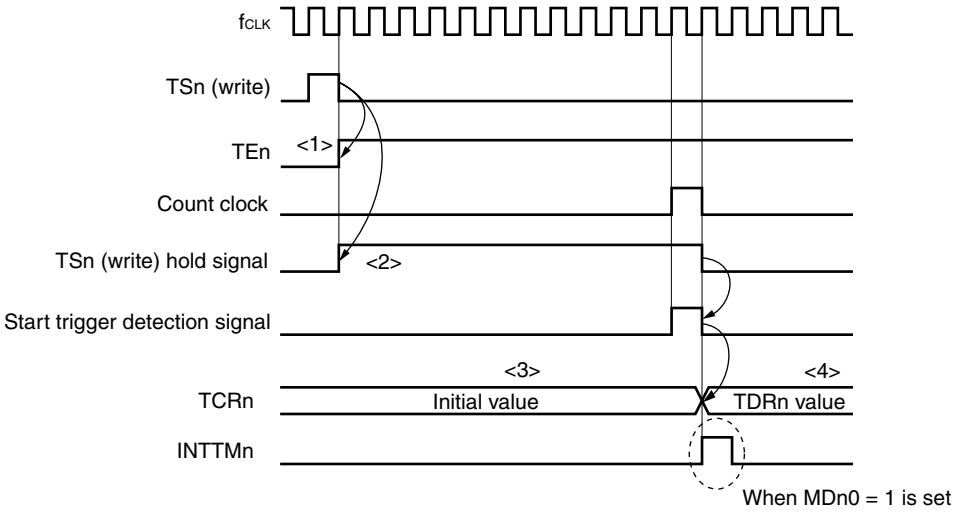

Note These operation modes are used with the inverter control function. For the inverter control function, refer to **CHAPTER 7 INVERTER CONTROL FUNCTIONS**.

Caution In the first cycle operation of count clock after writing TSn, an error at a maximum of one clock is generated since count start delays until count clock has been generated. When the information on count start timing is necessary, an interrupt can be generated at count start by setting MDn0 = 1.

(b) Start timing in event counter mode

<1> TCRn holds its initial value while operation is stopped (TEn = 0).
<2> Operation is enabled (TEn = 1) by writing 1 to the TSn.
<3> 1 is written to TSn and 1 is set to TEn, and at the same time the value of TDRn is loaded to TCRn to start counting.
<4> After that, the TCRn value is counted down according to the count clock.

Figure 6-12. Start Timing (In Event Counter Mode)

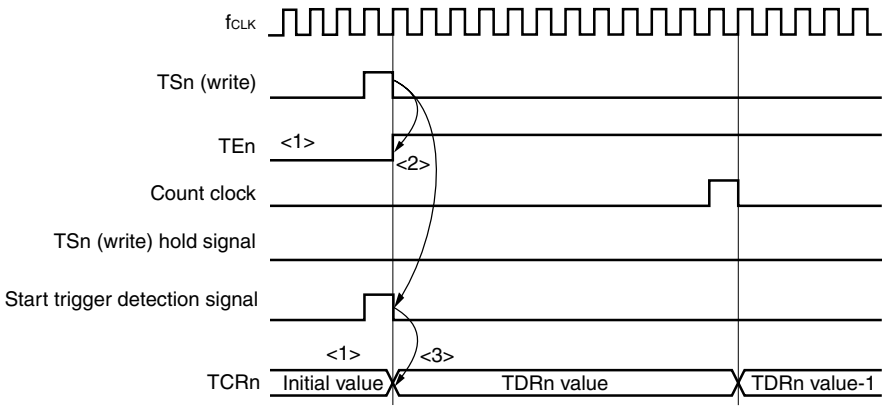

(c) Start timing in capture mode

<1> Operation is enabled (TEn = 1) by writing 1 to the TSn.
<2> The write data to TSn is held until count clock generation.
<3> TCRn holds the initial value until count clock generation.
<4> On generation of count clock, 0000H is loaded to TCRn and count starts.

Figure 6-13. Start Timing (In Capture Mode)

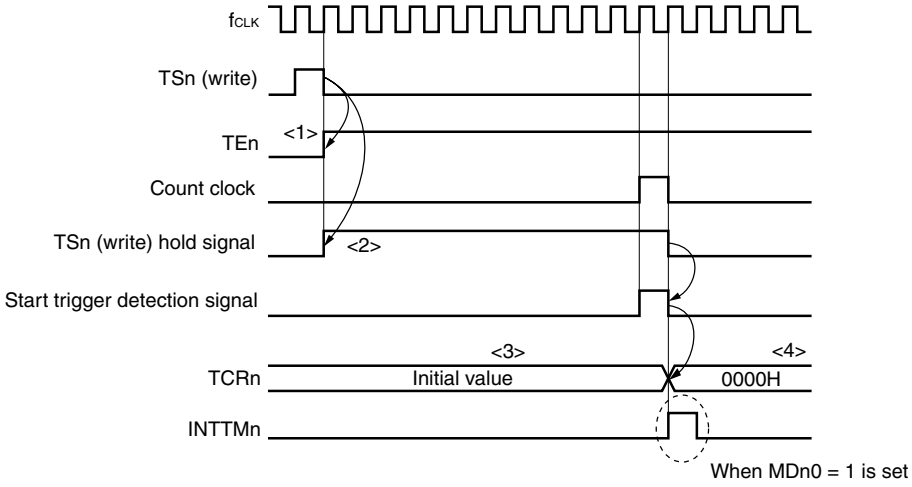

Caution In the first cycle operation of count clock after writing TSn, an error at a maximum of one clock is generated since count start delays until count clock has been generated. When the information on count start timing is necessary, an interrupt can be generated at count start by setting MDn0 = 1.

(d) Start timing in one-count mode

<1> Operation is enabled (TEn = 1) by writing 1 to the TSn.
<2> Enters the start trigger input wait status, and TCRn holds the initial value.
<3> On start trigger detection, the value of TDRn is loaded to TCRn and count starts.

Figure 6-14. Start Timing (In One-count Mode)

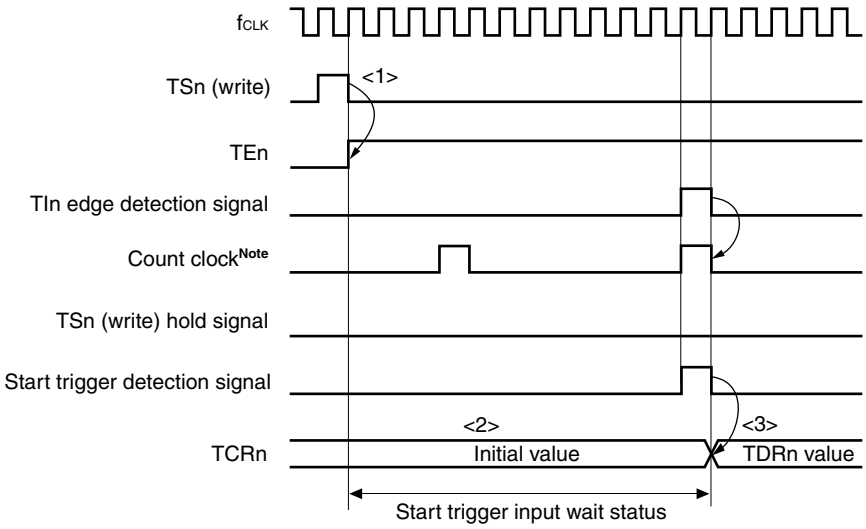

Note When the one-count mode is set, the operation clock (f_{MCK}) is selected as count clock (CCS1n, CCS0n = 0).

Caution An input signal sampling error is generated since operation starts upon start trigger detection (If the TIn pin input signal is used as a start trigger, an error of one count clock occurs).

(e) Start timing in capture & one-count mode

<1> Operation is enabled (TEn = 1) by writing 1 to the TSn.
<2> Enters the start trigger input wait status, and TCRn holds the initial value.
<3> On start trigger detection, 0000H is loaded to TCRn and count starts.

Figure 6-15. Start Timing (In Capture & One-count Mode)

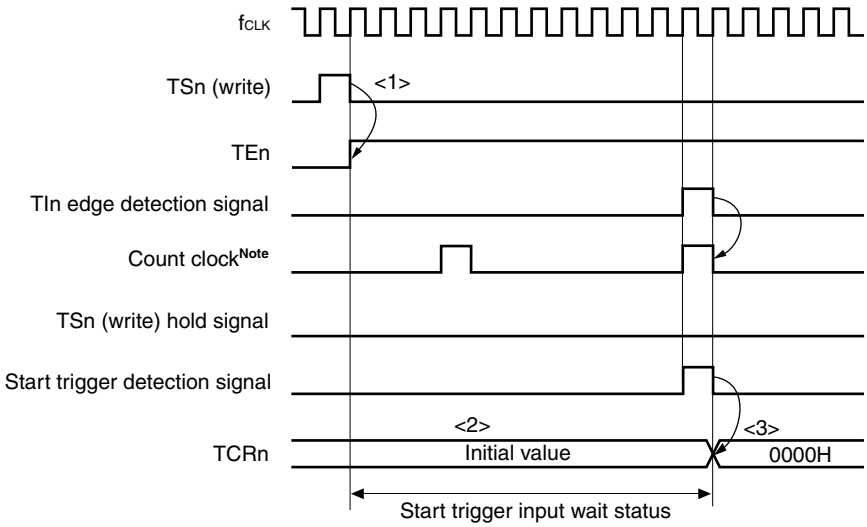

Note When the capture & one-count mode is set, the operation clock (f_{MCK}) is selected as count clock (CCS1n, CCS0n = 0).

Caution An input signal sampling error is generated since operation starts upon start trigger detection (If the TIn pin input signal is used as a start trigger, an error of one count clock occurs).

(7) Timer channel stop register 0 (TT0)

TT0 is a trigger register that is used to clear a timer counter (TCRn) and start the counting operation of each channel.

When a bit (TTn) of this register is set to 1, the corresponding bit (TEn) of timer channel enable status register 0 (TE0) is cleared to 0. The TTn bit is immediately cleared when operation is stopped (TEn = 0), because it is a trigger bit.

TT0 can be set by a 16-bit memory manipulation instruction.

Reset signal generation clears TT0 to 0000H.

Figure 6-16. Format of Timer Channel Stop Register 0 (TT0)

Address: F01B4H, F01B5H After reset: 0000H R/W

Symbol	15	14	13	12	11	10	9	8	7	6	5	4	3	2	1	0
TT0	0	0	0	0	TT11	TT10	TT09	TT08	TT07	TT06	TT05	TT04	TT03	TT02	TT01	TT00

TTn	Operation stop trigger of channel n
0	No trigger operation
1	Operation is stopped (stop trigger is generated).

Caution Be sure to clear bits 15 to 12 to "0".

Remarks 1. When the TT0 register is read, 0 is always read.

2. n = 00 to 11

(8) Timer input select register 0 (TIS0) (products other than 78K0R/IB3)

TIS0 is used to select whether a signal input to the timer input pin (TIn) or the subsystem clock divided by four ($f_{SUB}/4$) is valid for each channel.

TIS0 can be set by a 1-bit or 8-bit memory manipulation instruction.

Reset signal generation clears TIS0 to 00H.

Figure 6-17. Format of Timer Input Select Register 0 (TIS0)

Address: FFF3EH After reset: 00H R/W

Symbol	7	6	5	4	3	2	1	0
TIS0	TIS07	TIS06	TIS05	TIS04	TIS03	TIS02	TIS01	TIS00

TISn	Selection of timer input/subsystem clock used with channel n
0	Input signal of timer input pin (TIn)
1	Subsystem clock divided by 4 ($f_{SUB}/4$)

Remark n = 00 to 07

(9) Timer output enable register 0 (TOE0)

TOE0 is used to enable or disable timer output of each channel.

Channel n for which timer output has been enabled becomes unable to rewrite the value of the TOn bit of the timer output register (TO0) described later by software, and the value reflecting the setting of the timer output function through the count operation is output from the timer output pin (TOn).

TOE0 can be set by a 16-bit memory manipulation instruction.

Reset signal generation clears TOE0 to 0000H.

Figure 6-18. Format of Timer Output Enable Register 0 (TOE0)

Address: F01BAH, F01BBH After reset: 0000H R/W

Symbol	15	14	13	12	11	10	9	8	7	6	5	4	3	2	1	0
TOE0	0	0	0	0	TOE11	TOE10	TOE09	TOE08	TOE07	TOE06	TOE05	TOE04	TOE03	TOE02	TOE01	TOE00

TOEn	Timer output enable/disable of channel n
0	The TOn operation stopped by count operation (timer channel output bit). Writing to the TOn bit is enabled. The TOn pin functions as data output, and it outputs the level set to the TOn bit. The output level of the TOn pin can be manipulated by software.
1	The TOn operation enabled by count operation (timer channel output bit). Writing to the TOn bit is disabled (writing is ignored). The TOn pin functions as timer output, and the TOEn is set or reset depending on the timer operation. The TOn pin outputs the square-wave or PWM depending on the timer operation.

Caution Be sure to clear bits 15 to 12 to “0”.

Remark n = 00 to 11 (Timer Output pin (TOn) of 78K0R/IB3: n = 02 to 07 and 11)

(10) Timer output register 0 (TO0)

TO0 is a buffer register of timer output of each channel.

The value of each bit in this register is output from the timer output pin (TOn) of each channel.

TOn bit of This register can be rewritten by software only when timer output is disabled (TOEn = 0). When timer output is enabled (TOEn = 1), rewriting this register by software is ignored, and the value is changed only by the timer operation (For details of the rewriting this register by software, refer to **6.5.4 Collective manipulation of TOn bits**).

When using the following timer output pins as port pins, set the corresponding TOn bit to 0.

78K0R/IB3 : P10/TO02, P11/TO03, P12/TO04, P13/TO05, P50/TO06, P51/TO07, P30/TO11
78K0R/IC3 : P10/TO02, P11/TO03, P12/TO04, P13/TO05, P50/TO06, P51/TO07, P73/TO10, P30/TO11, P52/SLTO
78K0R/ID3, 78K0R/IE3 : P10/TO02, P11/TO03, P12/TO04, P13/TO05, P14/TO06, P15/TO07, P73/TO10, P30/TO11, P52/SLTO

TO0 can be set by a 16-bit memory manipulation instruction.

Reset signal generation clears TO0 to 0000H.

Figure 6-19. Format of Timer Output Register 0 (TO0)

Address: F01B8H, F01B9H After reset: 0000H R/W

Symbol	15	14	13	12	11	10	9	8	7	6	5	4	3	2	1	0
TO0	0	0	0	0	TO 11	TO 10	TO 09	TO 08	TO 07	TO 06	TO 05	TO 04	TO 03	TO 02	TO 01	TO 00

TOn	Timer output of channel n
0	Timer output value is “0”.
1	Timer output value is “1”.

Caution Be sure to clear bits 15 to 12 to “0”.

Remark n = 00 to 11 (Timer Output pin (TOn) of 78K0R/IB3: n = 02 to 07, and 11).

(11) Timer output level register 0 (TOL0)

TOL0 is a register that controls the timer output level of each channel.

The setting of the inverted output of channel n by this register is reflected at the timing of set or reset of the timer output signal while the timer output is enabled (TOEn = 1) in the slave channel output mode (TOMn = 1) and triangular wave PWM output with dead time off (TDEn = 0). In the master channel output mode (TOMn = 0), this register setting is invalid.

TOL0 can be set by a 16-bit memory manipulation instruction.

Reset signal generation clears this register to 0000H.

Figure 6-20. Format of Timer Output Level Register 0 (TOL0)

Address: F01BCH, F01BDH After reset: 0000H R/W

Symbol	15	14	13	12	11	10	9	8	7	6	5	4	3	2	1	0
TOL0	0	0	0	0	TOL 11	TOL 10	TOL 09	TOL 08	TOL 07	TOL 06	TOL 05	TOL 04	TOL 03	TOL 02	TOL 01	TOL 00

TOL n	Control of timer output level of channel n
0	Positive logic output (active-high) Adds dead time to the positive logic side when TDEn = 1 of the timer dead time output enable register 0 (TDE0) is 1[Note].
1	Inverted output (active-low) Adds dead time to the inverted logic side when TDEn = 1 of the timer dead time output enable register 0 (TDE0) is 1[Note].

Notes 1. These settings are used with the inverter control function. For the inverter control function, refer to **CHAPTER 7 INVERTER CONTROL FUNCTIONS**.

2. When using triangular wave PWM output with dead time or 6-phase triangular wave PWM output, do not rewrite the TOL0 register while the timer is operating. If the TOL0 register is rewritten while the timer is operating, the waveform output from TOn during the rewritten PWM cycle will be irregular. Note, however, that this does not occur when using complementary modulation output. (For details, see **CHAPTER 7 INVERTER CONTROL FUNCTIONS**.)

Caution Be sure to clear bits 15 to 12 to "0".

Remarks 1. If the value of this register is rewritten during timer operation, the timer output is inverted when the timer output signal changes next, instead of immediately after the register value is rewritten.

2. n = 00 to 11

(12) Timer output mode register 0 (TOM0)

TOM0 is used to control the timer output mode of each channel.

When a channel is used for the independent channel operation function, set the corresponding bit of the channel to be used to 0.

When a channel is used for the simultaneous channel operation function, set the corresponding bit of the master channel to 0 and the corresponding bit of the slave channel to 1.

The setting of each channel n specified by using this register is applied when timer output is enabled (TOEn = 1)[Note].

TOM0 can be rewritten when timer operation is stopped (TEn = 1).

TOM0 can be set by a 16-bit memory manipulation instruction.

Reset signal generation clears this register to 0000H.

Note The setting of each channel n when the inverter control function is used is applied when timer output is enabled (TOEn = 1) and TREn is set to 0 or TREn and TMEn are set to 1.

Figure 6-21. Format of Timer Output Mode Register 0 (TOM0)

Address: F01BEH, F01BFH After reset: 0000H R/W

Symbol	15	14	13	12	11	10	9	8	7	6	5	4	3	2	1	0
TOM0	0	0	0	0	TOM 11	TOM 10	TOM 09	TOM 08	TOM 07	TOM 06	TOM 05	TOM 04	TOM 03	TOM 02	TOM 01	TOM 00

TOM n	Control of timer output mode of channel n
0	Master channel output mode (to produce toggle output by timer interrupt request signal (INTTMn))
1	Slave channel output mode (select output mode by the timer triangle wave output mode register (TOT0) setting[Note]).

Note When the inverter control function is used, the slave channel output mode is selected by the timer triangle wave output mode register0 (TOT0) setting. For details, refer to **CHAPTER 7 INVERTER CONTROL FUNCTIONS**.

Caution Be sure to clear bits 15 to 12 to "0".

Remark n: Channel number, m: Slave channel number

n = 00 to 11 (n = 00, 02, 04, 06, 08, 10 for master channel)

n < m ≤ 11 (For details of the relation between the master channel and slave channel, refer to **6.4 Basic Rules of Simultaneous Channel Operation Function**.)

(13) Timer triangle wave output mode register 0 (TOT0)
(14) Timer real-time output enable register 0 (TRE0)
(15) Timer real-time output register 0 (TRO0)
(16) Timer real-time control register 0 (TRC0)
(17) Timer dead time output enable register 0 (TDE0)
(18) Timer modulation output enable register 0 (TME0)
(19) TAU option mode register (OPMR)
(20) TAU option status register (OPSR)
(21) TAU option Hi-Z start trigger register (OPHS)
(22) TAU option Hi-Z stop trigger register (OPHT)
(23) TAU option control register (OPCR)

The above-mentioned registers are used with the inverter control function. For the setting and inverter control of each register, refer to **CHAPTER 7 INVERTER CONTROL FUNCTIONS**.

(24) Input switch control register (ISC)

The ISC1 and ISC0 bits of the ISC register are used to perform LIN-bus communication operation by using channel 7 in association with the serial array unit.

When ISC1 bit is set to 1, the input signal of the serial data input pin (RxD0) is selected as a timer input signal.

The ISC4 to ISC2 bits are set to select the P52/SLTI/SLTO pin as the timer I/O pin of timer channels 0, 1, and 8 to 11 (ISC4 to ISC2 bits are not provided in 78K0R/IB3).

ISC can be set by a 1-bit or 8-bit memory manipulation instruction.

Reset signal generation clears ISC to 00H.

Figure 6-22. Format of Input Switch Control Register (ISC)

Address: FFF3CH After reset: 00H R/W

Symbol	7	6	5	4	3	2	1	0
ISC	0	0	0	ISC4 Note 1	ISC3 Note 1	ISC2 Note 1	ISC1	ISC0

ISC4	ISC3	ISC2	Selecting P52/SLTI/SLTO Pin as Timer I/O Pin											
			Channel 0		Channel 1		Channel 8		Channel 9		Channel 10		Channel 11	
			Input pin	Output pin	Input pin	Output pin	Input pin	Output pin	Input pin	Output pin	Input pin	Output pin	Input pin	Output pin
0	0	0	P00/TI00	P01/TO00	P52/SLTI	P52/SLTO	P16/TI08	P16/TO08	P31/TI09 Note 2	P17/TO09	P74/TI10	P73/TO10	P75/TI11	P30/TO11
0	0	1	P52/SLTI	P52/SLTO	–	–	P16/TI08	P16/TO08	P31/TI09 Note 2	P17/TO09	P74/TI10	P73/TO10	P75/TI11	P30/TO11
0	1	0	P00/TI00	P01/TO00	–	–	P52/SLTI	P52/SLTO	P31/TI09 Note 2	P17/TO09	P74/TI10	P73/TO10	P75/TI11	P30/TO11
0	1	1	P00/TI00	P01/TO00	–	–	P16/TI08	P16/TO08	P52/SLTI	P52/SLTO	P74/TI10	P73/TO10	P75/TI11	P30/TO11
1	0	0	P00/TI00	P01/TO00	–	–	P16/TI08	P16/TO08	P31/TI09 Note 2	P17/TO09	P52/SLTI	P52/SLTO	P75/TI11	P30/TO11
1	0	1	P00/TI00	P01/TO00	–	–	P16/TI08	P16/TO08	P31/TI09 Note 2	P17/TO09	P74/TI10	P73/TO10	P52/SLTI	P52/SLTO
Other than the above			Setting prohibited											

ISC1	Switching channel 7 input of timer array unit TAUS
0	Uses the input signal of the TI07 pin as a timer input (normal operation).
1	Input signal of RxD0 pin is used as timer input (detects the wakeup signal and measures the low width of the sync break field and the pulse width of the sync field).

ISC0	Switching external interrupt (INTP0) input
0	Uses the input signal of the INTP0 pin as an external interrupt (normal operation).
1	Uses the input signal of the RxD0 pin as an external interrupt (wakeup signal detection).

(Note, **Caution** and **Remark** are listed on the next page.**)**

Notes 1. The ISC4 to ISC2 bits are not provided in the 78K0R/IB3. In the 78K0R/IB3, these bits are fixed to 0.
2. 78K0R/IE3 : P17/TI09

Cautions 1. Be sure to clear bits 7 to 5 to "0".

2. When RxD0 functions alternately as a timer input pin, the corresponding timer input pin channels can also be used for the LIN-bus function. The timer channels in each version of the 78K0R/Ix3 that can be used for the LIN-bus function in addition to timer channel 7 are shown below.

78K0R/IB3 (P11/RxD0/TI03/TO03)	**: Channel 3 of TAUS**
38-pin products of 78K0R/IC3 (P72/INTP6/RxD0)	**: None**
44-pin and 48-pin products of 78K0R/IC3, 78K0R/ID3, 78K0R/IE3 (P74/RxD0/TI10/SI00)	**: Chanel 10 of TAUS**

Remarks 1. When the LIN-bus communication function is used, select the input signal of the RxD0 pin by setting ISC1 to 1.

2. The presence or absence of channel0, 1 and 8 to 11 of timer I/O pins in each timer array unit channel depends on the product. For details, see Table 6-1 Timer I/O Pins Included in Each Product or Tables 6-3 to 6-5 I/O Pins That Can Be Selected for Channels 0, 1, and 8 to 11. For products that do not provide timer I/O pins for channels 0, 1, and 8 to 11, only the P52/SLTI/SLTO pin can be selected as a timer I/O pin.

(25) Noise filter enable registers 1, 2 (NFEN1, NFEN2)

NFEN1 and NFEN2 are used to set whether the noise filter can be used for the timer input signal to each channel.

Enable the noise filter by setting the corresponding bits to 1 on the pins in need of noise removal.

When the noise filter is ON, match detection and synchronization of the 2 clocks is performed with the operation clock (f_{MCK}). When the noise filter is OFF, only synchronization is performed with the operation clock (f_{MCK}).

NFEN1 and NFEN2 can be set by a 1-bit or 8-bit memory manipulation instruction.

Reset signal generation clears NFEN1 and NFEN2 to 00H.

Figure 6-23. Format of Noise Filter Enable Registers 1, 2 (NFEN1, NFEN2) (1/3)

Address: F0061H After reset: 00H R/W

Symbol	7	6	5	4	3	2	1	0
NFEN1	TNFEN07	TNFEN06	TNFEN05	TNFEN04	TNFEN03	TNFEN02	0	TNFEN00

Address: F0062H After reset: 00H R/W

Symbol	7	6	5	4	3	2	1	0
NFEN2	0	0	0	TNFENSL	TNFEN11	TNFEN10	TNFEN09	TNFEN08

TNFENSL	Enable/disable using noise filter of SLTI/SLTO/P52 pin input signal (There are no SLTI and SLTO pins of the 78K0R/IB3.)
0	Noise filter OFF
1	Noise filter ON

TNFEN11	Enable/disable using noise filter of TI11/$\overline{\text{SCK00}}$/P75 pin input signal (There is no TI11 pin in the 78K0R/IB3 and the 38-pin products of the 78K0R/IC3.)
0	Noise filter OFF
1	Noise filter ON

TNFEN10	Enable/disable using noise filter of TI10/SI00/RxD0/P74 pin input signal (There is no TI10 pin in the 78K0R/IB3 and the 38-pin products of the 78K0R/IC3.)
0	Noise filter OFF
1	Noise filter ON

TNFEN09	Enable/disable using noise filter of the following pin input signal 78K0R/IB3, 78K0R/IC3, 78K0R/ID3 : TI09/SI10/RxD1/SDA10/INTP1/P31 78K0R/IE3 : TI09/TO09/P17
0	Noise filter OFF
1	Noise filter ON

TNFEN08	Enable/disable using noise filter of TI08/TO08/P16 pin input signal (There is no TI08 pin of the 78K0R/IB3, 78K0R/IC3, and 78K0R/ID3.)
0	Noise filter OFF
1	Noise filter ON

Figure 6-23. Format of Noise Filter Enable Registers 1, 2 (NFEN1, NFEN2) (2/3)

Address: F0061H After reset: 00H R/W

Symbol	7	6	5	4	3	2	1	0
NFEN1	TNFEN07	TNFEN06	TNFEN05	TNFEN04	TNFEN03	TNFEN02	0	TNFEN00

Address: F0062H After reset: 00H R/W

Symbol	7	6	5	4	3	2	1	0
NFEN2	0	0	0	TNFENSL	TNFEN11	TNFEN10	TNFEN09	TNFEN08

TNFEN07	Enable/disable using noise filter of the following pin input signal 78K0R/IB3 : TI07/TO07/P51 pin or RxD0/TI03/TO03/P11 pin 38-pin products of 78K0R/IC3 : TI07/TO07/P51 pin or RxD0/INTP6/P72 pin 44-pin and 48-pin products of 78K0R/IC3 and 78K0R/ID3 : TI07/TO07/P51 pin or RxD0/SI00/TI10/P74 pin 78K0R/IE3 : TI07/TO07/P15 pin or RxD0/SI00/TI10/P74 pin
0	Noise filter OFF
1	Noise filter ON

TNFEN06	Enable/disable using noise filter of the following pin input signal 78K0R/IB3, 78K0R/IC3, 78K0R/ID3 : TI06/TO06/P50 78K0R/IE3 : TI06/TO06/P14
0	Noise filter OFF
1	Noise filter ON

TNFEN05	Enable/disable using noise filter of TI05/TO05/P13 pin input signal
0	Noise filter OFF
1	Noise filter ON

TNFEN04	Enable/disable using noise filter of TI04/TO04/P12 pin input signal
0	Noise filter OFF
1	Noise filter ON

TNFEN03	Enable/disable using noise filter of the following pin input signal 78K0R/IB3 : TI03/TO03/RxD0/P11 78K0R/IC3, 78K0R/ID3, 78K0R/IE3 : TI03/TO03/P11
0	Noise filter OFF
1	Noise filter ON

Note The applicable pin can be switched by setting ISC1 of the ISC register.

ISC1 = 0: Whether or not to use the noise filter of TI07 pin can be selected.
ISC1 = 1: Whether or not to use the noise filter of RxD0 pin can be selected.

Figure 6-23. Format of Noise Filter Enable Registers 1, 2 (NFEN1, NFEN2) (3/3)

Address: F0061H After reset: 00H R/W

Symbol	7	6	5	4	3	2	1	0
NFEN1	TNFEN07	TNFEN06	TNFEN05	TNFEN04	TNFEN03	TNFEN02	0	TNFEN00

Address: F0062H After reset: 00H R/W

Symbol	7	6	5	4	3	2	1	0
NFEN2	0	0	0	TNFENSL	TNFEN11	TNFEN10	TNFEN09	TNFEN08

TNFEN02	Enable/disable using noise filter of the following pin input signal 78K0R/IB3 : TI02/TO02/TxD0/P10 78K0R/IC3, 78K0R/ID3, 78K0R/IE3 : TI02/TO02/P10
0	Noise filter OFF
1	Noise filter ON

TNFEN00	Enable/disable using noise filter of TI00/P00 pin input signal (There is no TI00 pin of the 78K0R/IB3 and 78K0R/IC3.)
0	Noise filter OFF
1	Noise filter ON

(26) Port mode registers 0, 1, 3, 5, 7 (PM0, PM1, PM3, PM5, PM7) [Note]

These registers set input/output of ports 0, 1, 3, 5 and 7 [Note] in 1-bit units.

When using the ports (such as P12/TO04/TI04, P13/TO05/TI05 and P30/TO11/SO10/TxD1) to be shared with the timer output pin for timer output, set the port mode register (PMxx) bit and port register (Pxx) bit corresponding to each port to 0.

Example: When using P30/TO11/SO10/TxD1 for timer output
Set the PM30 bit of port mode register 3 to 0.
Set the P30 bit of port register 3 to 0.

When using the ports (such as P12/TO04/TI04, P13/TO05/TI05, P31/TI09/SI10/RxD1/SDA10/INTP1) to be shared with the timer output pin for timer input, set the port mode register (PMxx) bit corresponding to each port to 1. At this time, the port register (Pxx) bit may be 0 or 1.

Example: When using P31/TO09/SI10/RxD1/SDA10/INTP1 for timer input
Set the PM31 bit of port mode register 3 to 1.
Set the P31 bit of port register 3 to 0 or 1.

PM0, PM1,PM3, PM5, PM7 [Note] can be set by a 1-bit or 8-bit memory manipulation instruction.

Reset signal generation sets these registers to FFH.

Note The PM0 and P0 registers are only included in the 78K0R/ID3 and 78K0R/IE3. The PM7 and P7 registers are not provided in the 78K0R/IB3.

Figure 6-24. Format of Port Mode Registers 0, 1, 3, 5, and 7 (PM0, PM1, PM3, PM5, PM7) (Example: 78K0R/IE3)

Address: FFF20H After reset: FFH R/W

Symbol	7	6	5	4	3	2	1	0
PM0	1	1	1	1	1	1	PM01	PM00

Address: FFF21H After reset: FFH R/W

Symbol	7	6	5	4	3	2	1	0
PM1	PM17	PM16	PM15	PM14	PM13	PM12	PM11	PM10

Address: FFF23H After reset: FFH R/W

Symbol	7	6	5	4	3	2	1	0
PM3	1	1	1	1	PM33	PM32	PM31	PM30

Address: FFF25H After reset: FFH R/W

Symbol	7	6	5	4	3	2	1	0
PM5	1	1	1	1	PM53	PM52	PM51	PM50

Address: FFF27H After reset: FFH R/W

Symbol	7	6	5	4	3	2	1	0
PM7	PM77	PM76	PM75	PM74	PM73	PM72	PM71	PM70

PMmn	Pmn pin I/O mode selection (m = 0, 1, 3, 5, 7; n = 0 to 7)
0	Output mode (output buffer on)
1	Input mode (output buffer off)

Remark The figure shown above presents the format of port mode register 0, 1, 3, 5 and 7 of the 78K0R/IE3 products. For the format of port mode register of other products, see (1) Port mode registers (PMxx) in 4.3 Registers Controlling Port Function.

6.4 Basic Rules of Simultaneous Channel Operation Function

When simultaneously using multiple channels, namely, a combination of a master channel (a reference timer mainly counting the cycle) and slave channels (timers operating according to the master channel), the following rules apply.

(1) Only an even channel (channel 0, 2, 4, etc.) can be set as a master channel.
(2) Any channel, except channel 0, can be set as a slave channel.
(3) The slave channel must be lower than the master channel.
Example: If channel 2 is set as a master channel, channel 3 or those that follow (channels 3, 4, 5, etc.) can be set as a slave channel.

(4) Two or more slave channels can be set for one master channel.
(5) When two or more master channels are to be used, slave channels with a master channel between them may not be set.
Example: If channels 0 and 4 are set as master channels, channels 1 to 3 can be set as the slave channels of master channel 0. Channels 5 to 7 cannot be set as the slave channels of master channel 0.

(6) A master channel can transmit INTTMn (interrupt), start software trigger, and count clock to the lower channels.
(7) A slave channel can use the INTTMn (interrupt), start software trigger, or the count clock of the master channel as a source clock, but it cannot transmit its own INTTMn (interrupt), start software trigger, or the count clock to the lower channel.
(8) A master channel cannot use the INTTMn (interrupt), start software trigger, or the count clock from the other higher master channel as a source clock.
(9) To simultaneously start channels that operate in combination, the channel start trigger bit (TSn) of the channels in combination must be set at the same time.
(10) To stop the channels in combination simultaneously, the channel stop trigger bit (TTn) of the channels in combination must be set at the same time.

Remark n = 00 to 11 (n = 00, 02, 04, 06, 08, 10 for master channel.)

The rules of the simultaneous channel operation function are applied in a channel group (a master channel and slave channels forming one simultaneous channel operation function).

If two or more channel groups that do not operate in combination are specified, the basic rules of the simultaneous channel operation function above do not apply to the channel groups.

Example

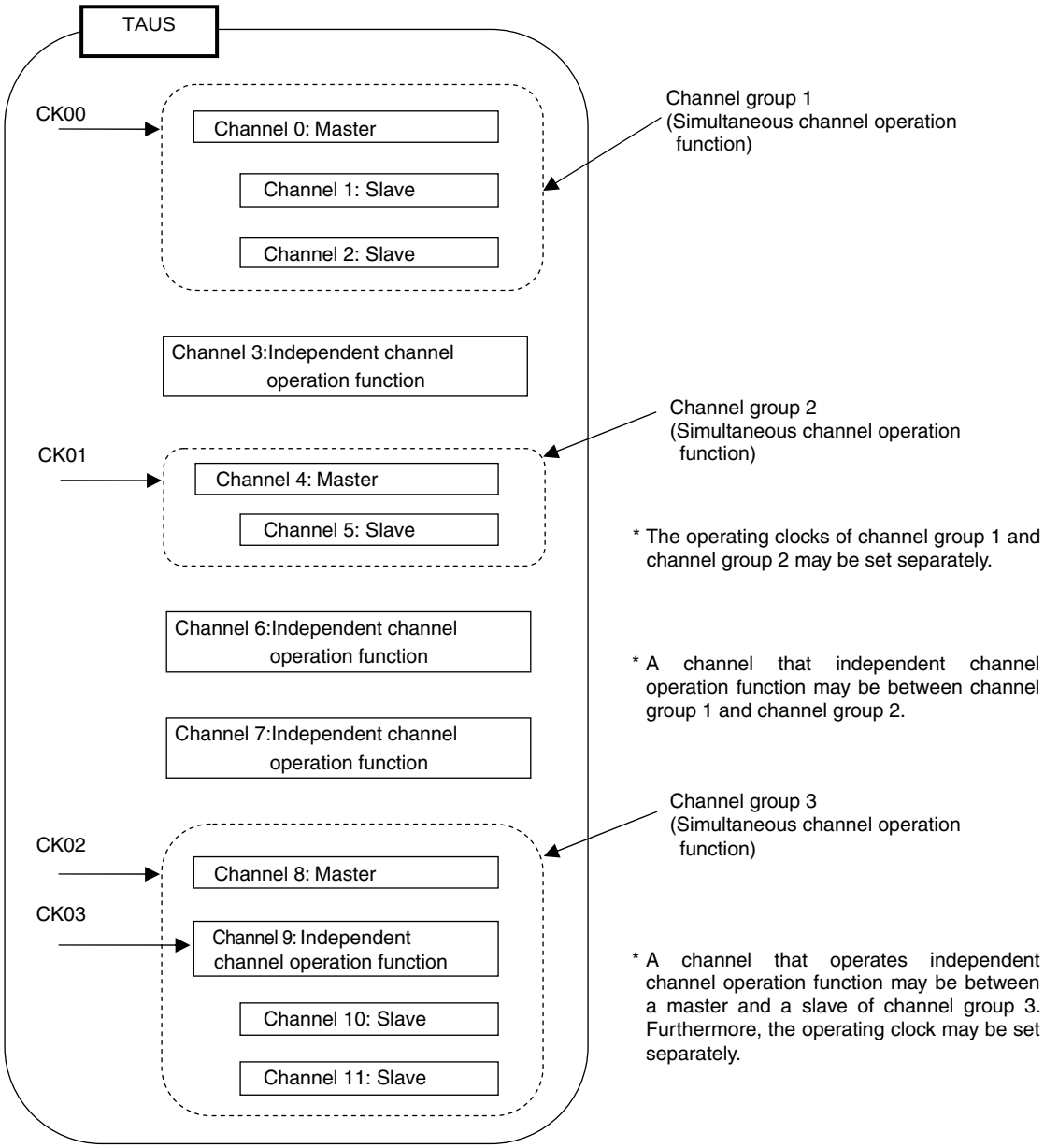
TAUS
CK00
Channel 0: Master
Channel 1: Slave
Channel 2: Slave
Channel 3:Independent channel operation function
CK01
Channel 4: Master
Channel 5: Slave
Channel 6:Independent channel operation function
Channel 7:Independent channel operation function
CK02
Channel 8: Master
CK03
Channel 9: Independent channel operation function
Channel 10: Slave
Channel 11: Slave
Channel group 1 (Simultaneous channel operation function)
Channel group 2 (Simultaneous channel operation function)
Channel group 3 (Simultaneous channel operation function)
* The operating clocks of channel group 1 and channel group 2 may be set separately.
* A channel that independent channel operation function may be between channel group 1 and channel group 2.
* A channel that operates independent channel operation function may be between a master and a slave of channel group 3. Furthermore, the operating clock may be set separately.

6.5 Channel Output (TOn pin) Control

6.5.1 TOn pin output circuit configuration (When the INVERTER CONTROL FUNCTIONS is not used)

Figure 6-25. Output Circuit Configuration

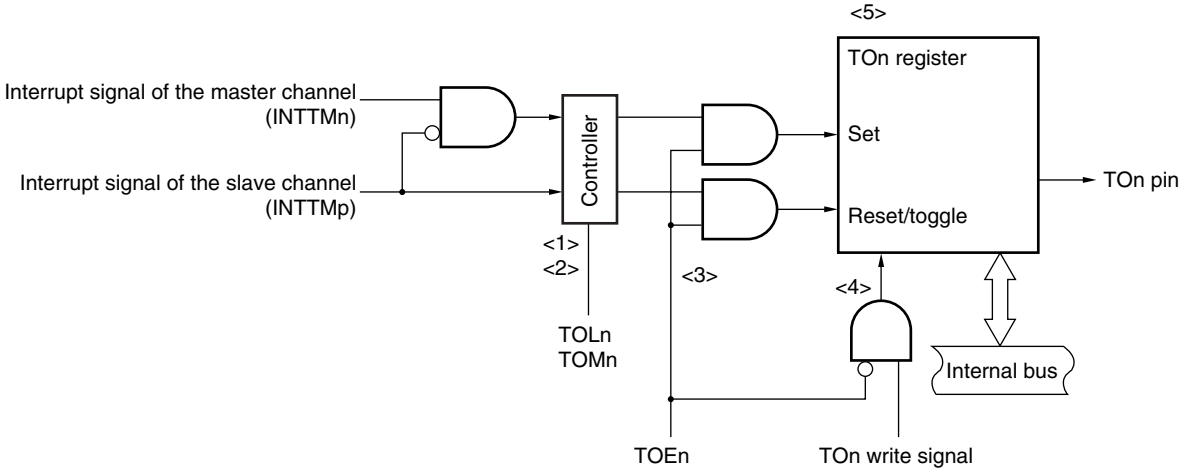

The following describes the TOn pin output circuit.

<1> When TOMn = 0 (master channel output mode), the set value of the TOL0 register is ignored and only INTTMp (slave channel timer interrupt) is transmitted to the TO0 register.

<2> When TOMn = 1 (slave channel output mode), both INTTMn (master channel timer interrupt) and INTTMp (slave channel timer interrupt) are transmitted to the TO0 register.
At this time, the TOL0 register becomes valid and the signals are controlled as follows:

When TOLn = 0: Forward operation (INTTMn → set, INTTMp → reset)
When TOLn = 1: Reverse operation (INTTMn → reset, INTTMp → set)

When INTTMn and INTTMp are simultaneously generated, (0% output of PWM), INTTMp (reset signal) takes priority, and INTTMn (set signal) is masked.

<3> While timer output is enabled (TOEn = 1), INTTMn (master channel timer interrupt) and INTTMp (slave channel timer interrupt) are transmitted to the TOn. Writing to the TO0 register (TOn write signal) becomes invalid.
When TOEn = 1, the TOn pin output never changes with signals other than interrupt signals.
To initialize the TOn pin output level, it is necessary to set the timer operation is stopped (TOEn = 0) and to write a value to TOn.

<4> While timer output is disabled (TOEn = 0), writing to TOn bit to the target channel (TOn write signal) becomes valid. When timer output is disabled (TOEn = 0), neither INTTMn (master channel timer interrupt) nor INTTMp (slave channel timer interrupt) is transmitted to TO0 register.

<5> The TOn register can always be read, and the TOn pin output level can be checked.

Remark n: Channel number, p: Slave channel number
n = 00 to 11 (n = 00, 02, 04, 06, 08, 10 for master channel. n = 02 to 07 and 09: Timer input pin (TIn) of 78K0R/IB3. n = 02 to 07 and 11: Timer output pin (TOn) of 78K0R/IB3.)
$n < p \leq 11$ (For details of the relation between the master channel and slave channel, refer to **6.4 Basic Rules of Simultaneous Channel Operation Function**.)

6.5.2 TOn pin output setting

The following figure shows the procedure and status transition of TOn out put pin from initial setting to timer operation start.

Figure 6-26. Status Transition from Timer Output Setting to Operation Start

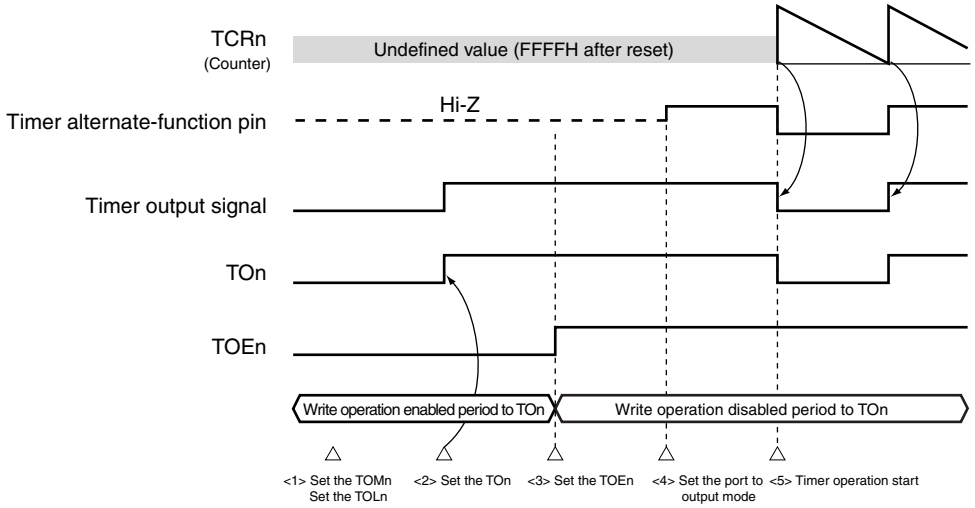

<1> The operation mode of timer output is set.

- TOMn bit (0: Master channel output mode, 1: Slave channel output mode)
- TOLn bit (0: Forward output, 1: Reverse output)

<2> The timer output signal is set to the initial status by setting TO0 register.
<3> The timer output operation is enabled by writing 1 to TOEn (writing to TO0 register is disabled).
<4> The port I/O setting is set to output (see **6.3 (26) Port mode registers 0, 1, 3, 5, 7**).
<5> The timer operation is enabled (TSn = 1).

Remark n = 00 to 11 (n = 02 to 07 and 11 for timer output pin (TOn) of 78K0R/IB3)

6.5.3 Cautions on channel output operation

(1) Changing values set in registers TO0, TOE0, TOL0, and TOM0 during timer operation

Since the timer operations (operations of TCRn and TDRn) are independent of the TOn output circuit and changing the values set in TO0, TOE0, TOL0, and TOM0 does not affect the timer operation, the values can be changed during timer operation. To output an expected waveform from the TOn pin by timer operation, however, set TO0, TOE0, TOL0, and TOM0 to the values stated in the register setting example of each operation.

When the values set to the TOE0, TOL0, and TOM0 registers (but not the TO0 register) are changed close to the occurrence of the timer interrupt (INTTMn) of each channel, the waveform output to the TOn pin might differ, depending on whether the values are changed immediately before or immediately after the timer interrupt (INTTMn) occurs.

Remark n = 00 to 11 (n = 02 to 07 and 11for the timer output pin (TOn) of 78K0R/IB3)

(2) Default level of TOn pin and output level after timer operation start

The change in the output level of the TOn pin when TO0 register is written while timer output is disabled (TOEn = 0), the initial level is changed, and then timer output is enabled (TOEn = 1) before port output is enabled, is shown below.

(a) When operation starts with master channel output mode (TOMn = 0) setting (toggle output)

The setting of TOL0 register is invalid when master channel output mode (TOMn = 0). When the timer operation starts after setting the default level, the toggle signal is generated and the output level of TOn pin is reversed.

Figure 6-27. TOn Pin Output Status at Toggle Output (TOMn = 0)

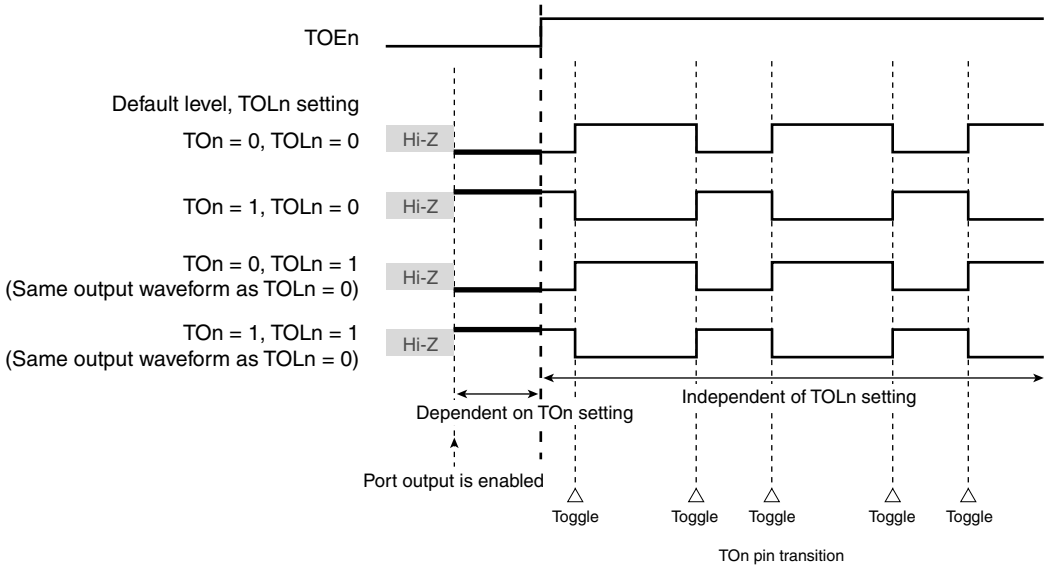

Remarks 1. Toggle: Reverse TOn pin output status

2. n = 00 to 11 (n = 02 to 07 and 11 for timer output pin (TOn) of 78K0R/IB3)

(b) When operation starts with slave channel output mode (TOMn = 1) setting (PWM output)

When slave channel output mode (TOMn = 1), the active level is determined by TOLn setting.

Figure 6-28. TOn Pin Output Status at PWM Output (TOMn = 1)

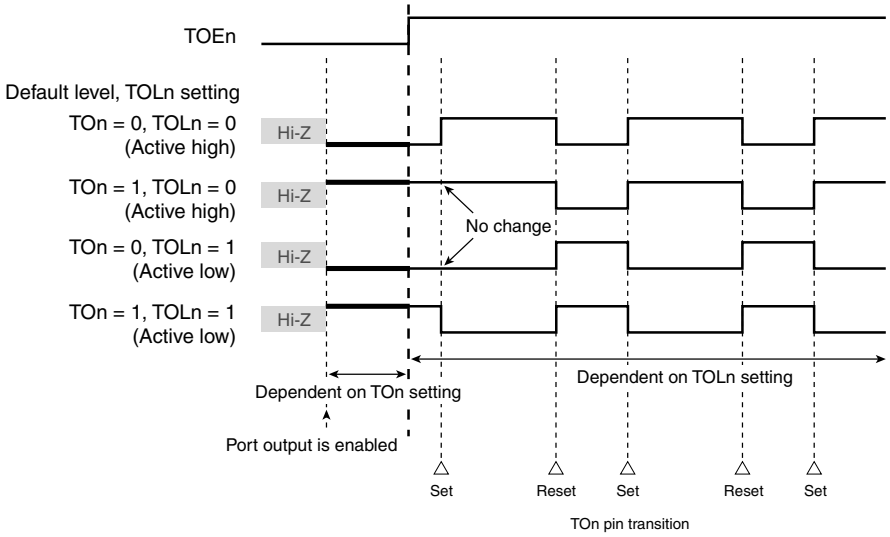

Remarks 1. Set: The output signal of TOn pin changes from inactive level to active level.
Reset: The output signal of TOn pin changes from active level to inactive level.

2. n = 00 to 11 (n = 02 to 07 and 11 for timer output pin (TOn) of 78K0R/IB3)

(3) Operation of TOn pin in slave channel output mode (TOMn = 1)

(a) When TOL0 register setting has been changed during timer operation

When the TOL0 register setting has been changed during timer operation, the setting becomes valid at the generation timing of Ton pin change condition. Rewriting TOL0 register does not change the output level of TOn pin.

The operation when TOMn is set to 1 and the value of the TOL0 register is changed while the timer is operating (TEn = 1) is shown below.

Figure 6-29. Operation when TOL0 Register Has Been Changed during Timer Operation

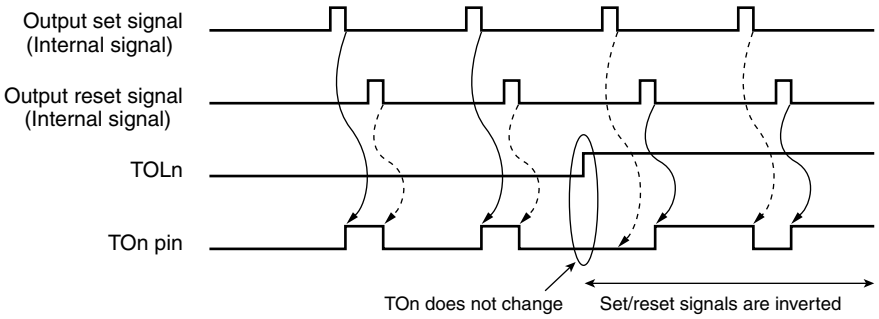

Remarks 1. Set: The output signal of TOn pin changes from inactive level to active level.
Reset: The output signal of TOn pin changes from active level to inactive level.

2. n = 00 to 11 (n = 02 to 07 and 11 for timer output pin (TOn) of 78K0R/IB3)

(b) Set/reset timing

To realize 0%/100% output at PWM output, the TOn pin/TOn bit set timing at master channel timer interrupt (INTTMn) generation is delayed by 1 count clock by the slave channel.

If the set condition and reset condition are generated at the same time, a higher priority is given to the latter.

Figure 6-30 shows the set/reset operating statuses where the master/slave channels are set as follows.

Master channel: TOEn = 1, TOMn = 0, TOLn = 0
Slave channel: TOEp = 1, TOMp = 1, TOLp = 0

Figure 6-30. Set/Reset Timing Operating Statuses

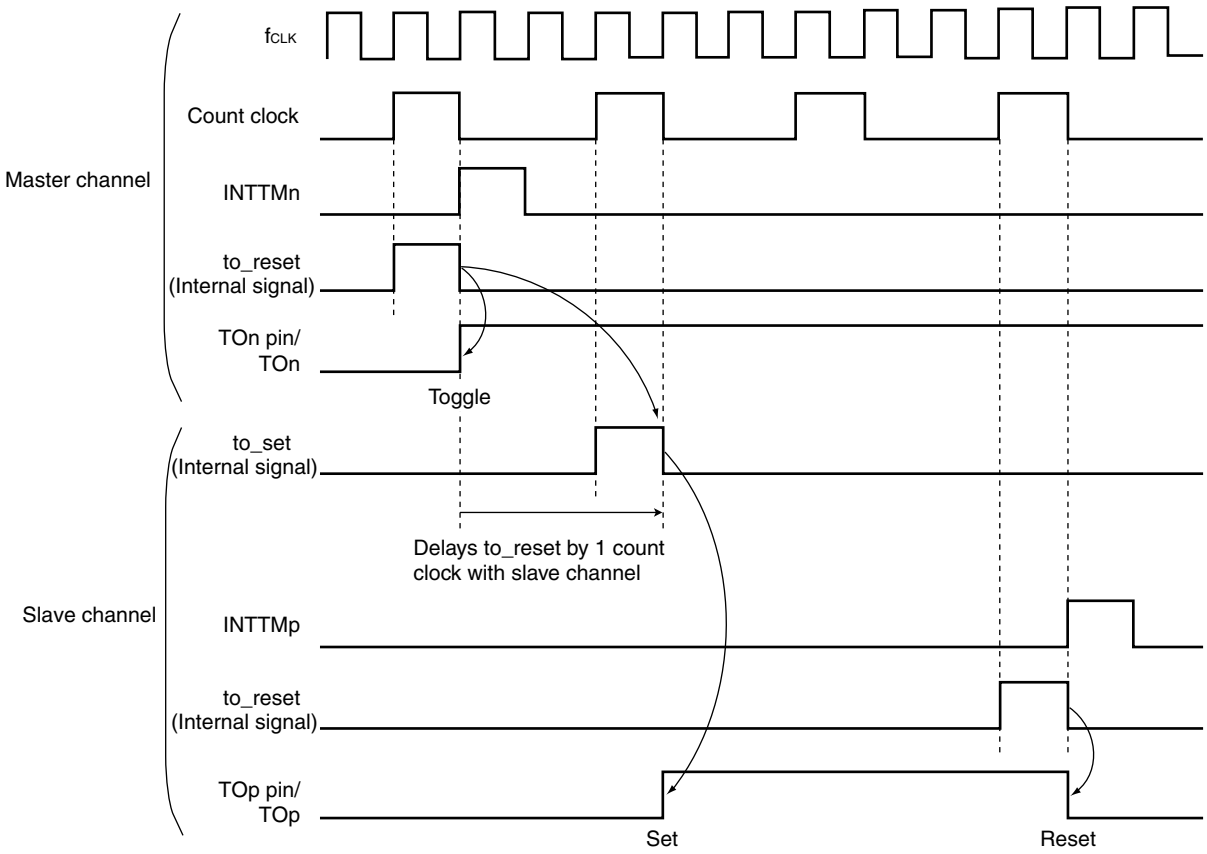

Remarks 1. to_reset: TOn pin reset/toggle signal
to_set: TOn pin set signal

2. n: Channel number, p: Slave channel number
n = 00 to 11 (n = 00, 02, 04, 06, 08, 10 for master channel, n = 02 to 07 and 9: Timer input pin (TIn) of 78K0R/IB3, n = 02 to 07 and 11: Timer output pin (TOn) of 78K0R/IB3)
$n < p \leq 11$ (For details of the relation between the master channel and slave channel, refer to **6.4 Basic Rules of Simultaneous Channel Operation Function**.)

6.5.4 Collective manipulation of TOn bits

In the TO0 register, the setting bits for all the channels are located in one register in the same way as the TS0 register (channel start trigger). Therefore, the TOn bit of all channels can be manipulated at once. Only the desired bits can also be manipulated by enabling writing only to the TOn bits (TOEn = 0) that correspond to the relevant bits of the channel used to perform output (TOn).

Figure 6-31. Example of TOn Bits Collective Manipulation

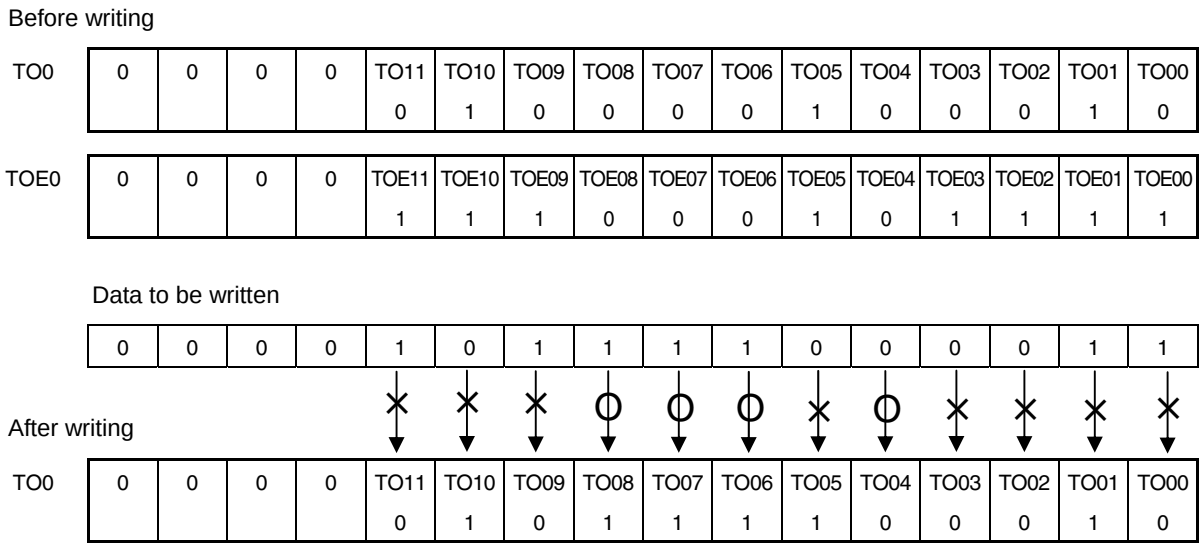

Writing is done only to TOn bits with TOEn = 0, and writing to TOn bits with TOEn = 1 is ignored.

TOn (channel output) to which TOEn = 1 is set is not affected by the write operation. Even if the write operation is done to TOn, it is ignored and the output change by timer operation is normally done.

Figure 6-32. TOn Pin Statuses by Collective Manipulation of TOn Bits

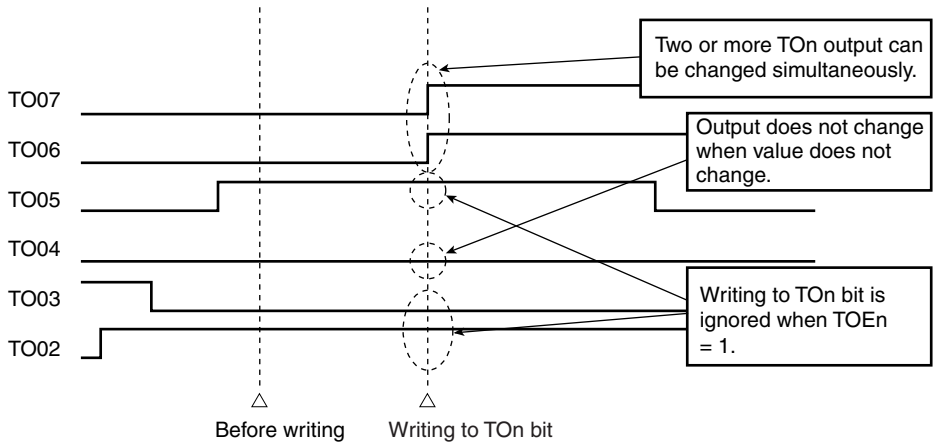

Caution When timer output is enabled (TOEn = 1), even if the output by timer interrupt of each timer (INTTMn) contends with writing to TOn, output is normally done to TOn pin.

Remark n = 00 to 11 (n = 02 to 07 and 11 for timer output pin (TOn) of 78K0R/IB3)

6.5.5 Timer interrupt and TOn pin output at operation start

In the interval timer mode or capture mode, the MDn0 bit in the TMRn register sets whether or not to generate a timer interrupt at count start.

When MDn0 is set to 1, the count operation start timing can be known by the timer interrupt (INTTMn) generation.

In the other modes, neither timer interrupt at count operation start nor TOn output is controlled.

Figures 6-32 and 6-33 show operation examples when the interval timer mode (TOEn = 1, TOMn = 0) is set.

Figure 6-33. When MDn0 is set to 1

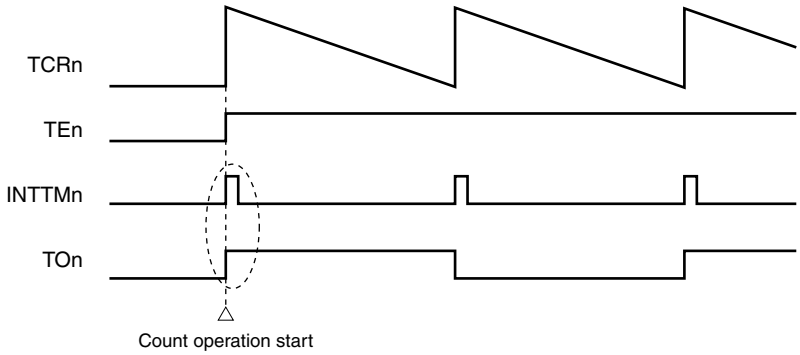

When MDn0 is set to 1, a timer interrupt (INTTMn) is output at count operation start, and TOn performs a toggle operation.

Figure 6-34. When MDn0 is set to 0

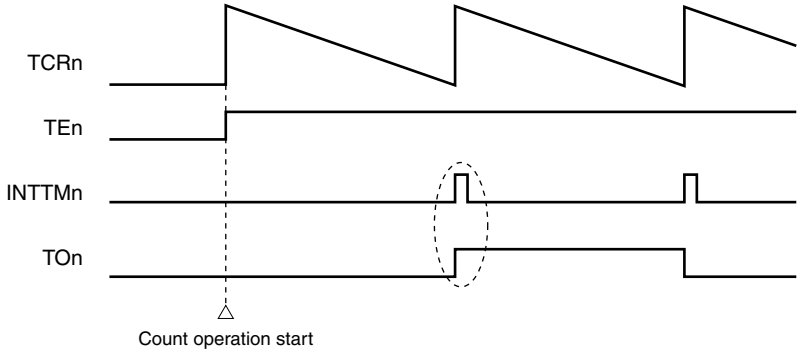

When MDn0 is set to 0, a timer interrupt (INTTMn) is not output at count operation start, and TOn does not change either. After counting one cycle, INTTMn is output and TOn performs a toggle operation.

Remark n = 00 to 11 (n = 02 to 07 and 11 for timer output pin (TOn) of 78K0R/IB3)

6.6 Channel Input (TIn Pin) Control

6.6.1 TIn edge detection circuit

(1) Edge detection basic operation timing

Edge detection circuit sampling is done in accordance with the operation clock (f_{MCK}).

Figure 6-35. Edge Detection Basic Operation Timing

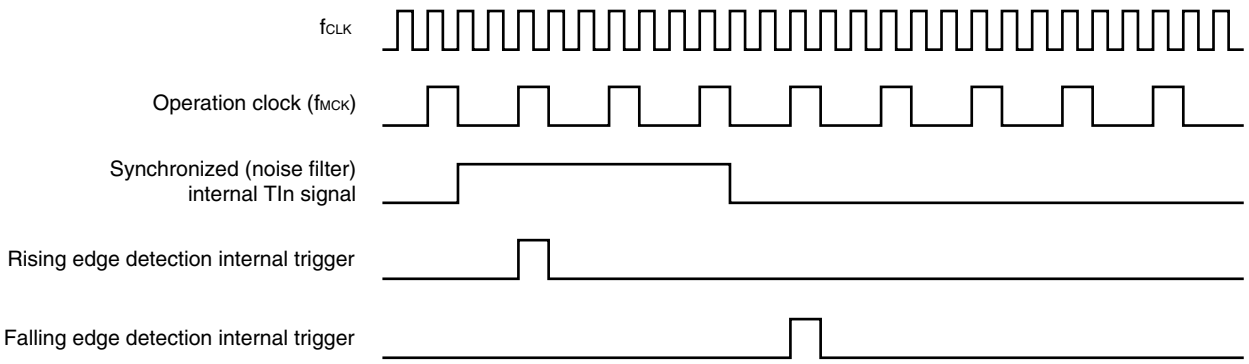

Remark n = 00 to 11 (n = 02 to 07 and 09 for timer input pin (TIn) of 78K0R/IB3)

6.7 Operation of Timer Array Unit TAUS as Independent Channel

6.7.1 Operation as interval timer/square wave output

(1) Interval timer

The timer array unit can be used as a reference timer that generates INTTMn (timer interrupt) at fixed intervals. The interrupt generation period can be calculated by the following expression.

Generation period of INTTMn (timer interrupt) = Period of count clock × (Set value of TDRn + 1)

In products other than the 78K0R/IB3, in addition to CK00 to CK03, the subsystem clock divided by 4 ($f_{SUB}/4$) can also be selected as the count clock. Consequently, the interval timer can be operated with the count clock fixed to $f_{SUB}/4$, regardless of the f_{CLK} frequency (main system clock, subsystem clock). However, be sure to change the clock selected as f_{CLK} (change the value of the system clock control register (CKC)) after stopping all channels of timer array unit TAUS (timer channel stop register 0 (TT0) = 0FFFH).

(2) Operation as square wave output

TOn performs a toggle operation at the same time INTTMn is generated, and outputs a square wave with a duty factor of 50%.

The period and frequency for outputting a square wave from TOn can be calculated by the following expressions.

• Period of square wave output from TOn = Period of count clock × (Set value of TDRn + 1) × 2
• Frequency of square wave output from TOn = Frequency of count clock/{(Set value of TDRn + 1) × 2}

TCRn operates as a down counter in the interval timer mode.

The TCRn register loads the value of TDRn register at the first count clock after the channel start trigger bit (TSn) of timer channel start register 0 (TS0) is set to 1. If MDn0 of TMRn = 0 at this time, INTTMn is not output and TOn is not toggled. If MDn0 of TMRn = 1, INTTMn is output and TOn is toggled.

After that, TCRn count down in synchronization with the count clock.

When TCRn = 0000H, INTTMn is output and TOn is toggled at the next count clock. At the same time, TCRn loads the value of TDRn again. After that, the same operation is repeated.

TDRn can be rewritten at any time. The new value of TDRn becomes valid from the next period.

Remarks 1. n = 0 to 11 (n = 02 to 07 and 11 in for timer output pin (TOn) of 78K0R/IB3)

2. f_{CLK}: CPU/peripheral hardware clock frequency

f_{SUB}: Subsystem clock oscillation frequency

Figure 6-36. Block Diagram of Operation as Interval Timer/Square Wave Output

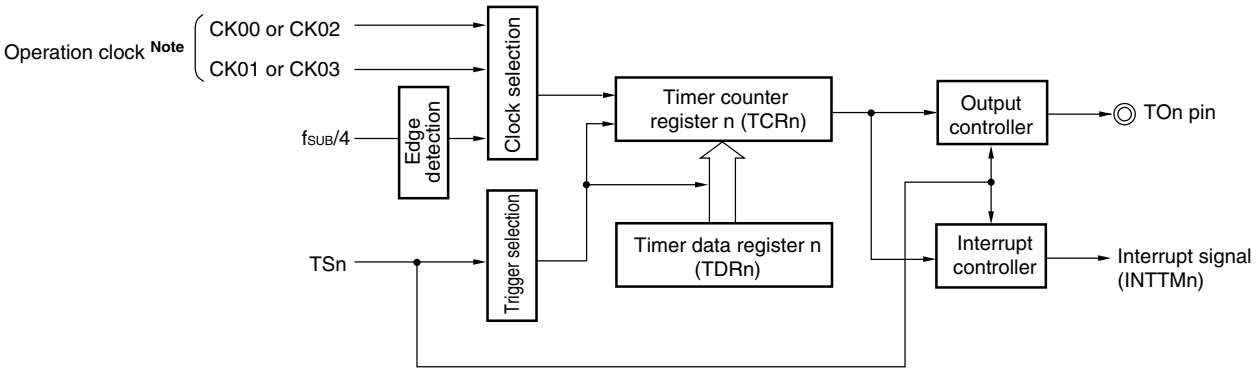

Note The operation clocks of channels 0 to 7 are selected from CK00 and CK01, and those of channels 8 to 11 from CK02 and CK03.

Figure 6-37. Example of Basic Timing of Operation as Interval Timer/Square Wave Output (Default setting : TOn = 0, MDn0 = 1)

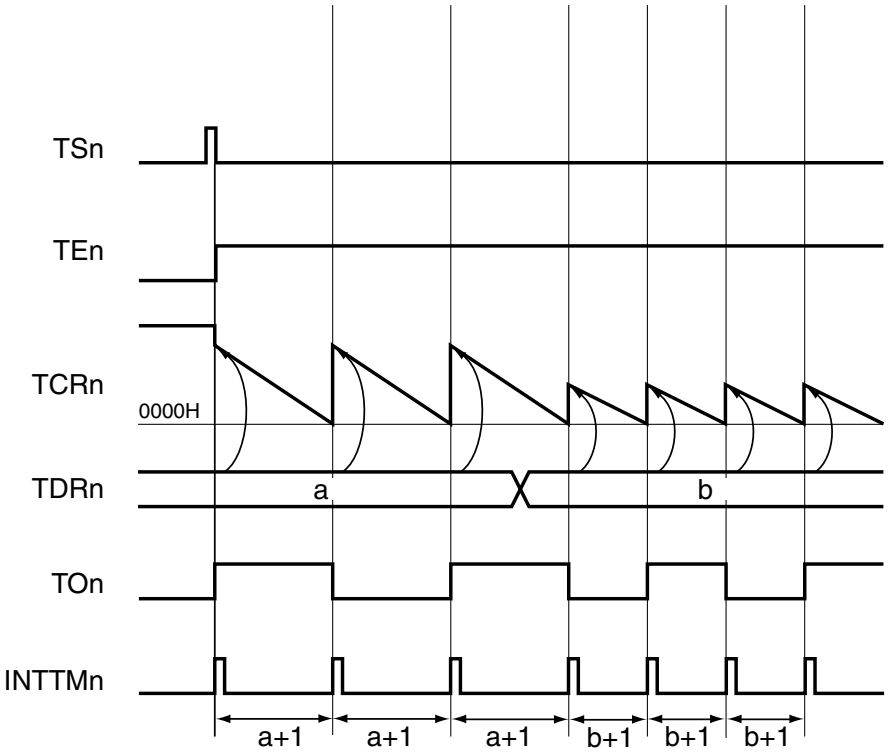

Remarks 1. n = 00 to 11 (n = 02 to 07, 11 for output pin (TOn) of 78K0R/IB3)

2. TSn: Bit n of timer channel start register 0 (TS0)

TEn: Bit n of timer channel enable status register 0 (TE0)

TCRn: Timer counter register n (TCRn)

TDRn: Timer data register n (TDRn)

TOn: TOn pin output signal

Figure 6-38. Example of Set Contents of Registers During Operation as Interval Timer/Square Wave Output (1/3)

(1) When CK00 or CK01 is selected as count clock

(a) Timer mode register n (TMRn)

	15	14	13	12	11	10	9	8	7	6	5	4	3	2	1	0
TMRn	CKSn		CCS1n	CCS0n	MAS TERn	STSn2	STSn1	STSn0	CISn1	CISn0		MDn4	MDn3	MDn2	MDn1	MDn0
	1/0	0	0	0	0	0	0	0	0	0	0	0	0	0	0	1/0

Operation mode of channel n
0000B: Interval timer

Setting of operation when counting is started
0: Neither generates INTTMn nor inverts timer output when counting is started.
1: Generates INTTMn and inverts timer output when counting is started.

Selection of TIn pin input edge
00B: Sets 00 because these are not used.

Start trigger selection
000B: Selects only software start.

Slave/master selection
0: Independent channel operation function

Count clock selection
00B: Selects the operation clock specified by using the CKSn bit (f_{MCK}) as the count clock.

Selecting the operation clock from two types of clocks (f_{MCK})
0: Selects CK00 (channels 0 to 7) or CK02 (channels 8 to 11) as operation clock of channel n.
1: Selects CK01 (channels 0 to 7) or CK03 (channels 8 to 11) as operation clock of channel n.

(b) Timer output register 0 (TO0)

	Bit n
TO0	TOn 1/0

0: Outputs 0 from TOn.
1: Outputs 1 from TOn.

(c) Timer output enable register 0 (TOE0)

	Bit n
TOE0	TOEn 1/0

0: Stops the TOn output operation by counting operation.
1: Enables the TOn output operation by counting operation.

(d) Timer output level register 0 (TOL0)

	Bit n
TOL0	TOLn 0

0: Cleared to 0 when TOMn = 0 (master channel output mode)

(e) Timer output mode register 0 (TOM0)

	Bit n
TOM0	TOMn 0

0: Sets master channel output mode.

Remark n = 00 to 11 (n = 02 to 07, 11 for timer output pin (TOn) of 78K0R/IB3)

Figure 6-38. Example of Set Contents of Registers During Operation as Interval Timer/Square Wave Output (2/3)

(2) When f_{SUB}/4 is selected as count clock (products other than 78K0R/IB3)

(a) Timer mode register n (TMRn)

	15	14	13	12	11	10	9	8	7	6	5	4	3	2	1	0
TMRn	CKSn		CCS1n	CCS0n	MAS TERn	STSn2	STSn1	STSn0	CISn1	CISn0		MDn4	MDn3	MDn2	MDn1	MDn0
	1/0	0	0	1	0	0	0	0	1/0	1/0	0	0	0	0	0	1/0

Operation mode of channel n
0000B: Interval timer

Setting of operation when counting is started
0: Neither generates INTTMn nor inverts timer output when counting is started.
1: Generates INTTMn and inverts timer output when counting is started.

f_{SUB}/4 edge selection
00B: Detects falling edge (counts on f_{SUB}/4 cycles).
01B: Detects rising edge (counts on f_{SUB}/4 cycles).
10B: Detects both edges (counts on f_{SUB}/2 cycles).
11B: Setting prohibited

Start trigger selection
000B: Selects only software start.

Slave/master selection
0: Independent channel operation function

Count clock selection
01B: Selects subsystem clock divided by four (f_{SUB}/4).

Operation clock selection
0: Selects CK00 (channels 0 to 7) or CK02 (channels 8 to 11) as operation clock of channel n.
1: Selects CK01 (channels 0 to 7) or CK03 (channels 8 to 11) as operation clock of channel n.
f_{CLK} (no division) is selected as selected operation clock by TPS0 register.

(b) Timer clock select register 0 (TPS0)

	Bits 7 to 4, 3 to 0	
TPS0	PRS0k3 to PRS0k0 0000	0000B: Selects f_{CLK} (no division) as operation clock selected by CKSn of TMRn register. k = 0 (bits 0 to 3) if CK00 is selected, k = 1 (bits 4 to 7) if CK01 is selected, k = 2 (bits 8 to 11) if CK02 is selected, and k = 3 (bits 12 to 15) if CK03 is selected.

(c) Timer input select register 0 (TIS0)

	Bit n	
TIS0	TISn 1	1: Selects subsystem clock divided by four (f_{SUB}/4).

(d) Timer output register 0 (TO0)

	Bit n	
TO0	TOn 1/0	0: Outputs 0 from TOn. 1: Outputs 1 from TOn.

Remarks 1. n = 00 to 11, k = 0 to 3

2. f_{SUB}: Subsystem clock oscillation frequency

Figure 6-38. Example of Set Contents of Registers During Operation as Interval Timer/Square Wave Output (3/3)

(2) When $f_{SUB}/4$ is selected as count clock (continued)

(e) Timer output enable register 0 (TOE0)

	Bit n	
TOE0	TOEn 1/0	0: Stops the TOn output operation by counting operation. 1: Enables the TOn output operation by counting operation.

(f) Timer output level register 0 (TOL0)

	Bit n	
TOL0	TOLn 0	0: Cleared to 0 when TOMn = 0 (master channel output mode)

(g) Timer output mode register 0 (TOM0)

	Bit n	
TOM0	TOMn 0	0: Sets master channel output mode.

Remark n = 00 to 11

Figure 6-39. Operation Procedure of Interval Timer/Square Wave Output Function

	Software Operation	Hardware Status
TAUS default setting		Power-off status (Clock supply is stopped and writing to each register is disabled.)
	Sets the TAU0EN bit of the PER2 register to 1. →	Power-on status. Each channel stops operating. (Clock supply is started and writing to each register is enabled.)
	Sets the TPS0 register. Determines the clock frequencies of CK00 and CK01 for channels 0 to 7, and those of CK02 and CK03 for channels 8 to 11.	
Channel default setting	Sets the TMRn register (determines operation mode of channel). Sets the TISn bit to 1 ($f_{SUB}/4$) when $f_{SUB}/4$ is selected as the count clock (products other than the 78K0R/IB3). Sets interval (period) value to the TDRn register.	Channel stops operating. (Clock is supplied and some power is consumed.)
	To use the TOn output Clears the TOMn bit of the TOM0 register to 0 (master channel output mode). Clears the TOLn bit to 0. Sets the TOn bit and determines default level of the TOn output. →	The TOn pin goes into Hi-Z output state. The TOn default setting level is output when the port mode register is in the output mode and the port register is 0.
	Sets TOEn to 1 and enables operation of TOn. →	TOn does not change because channel stops operating.
	Clears the port register and port mode register to 0. →	The TOn pin outputs the TOn set level.
Operation start	(Sets the TOEn bit to 1 only if using TOn output and resuming operation.) Sets the TSn bit to 1. → The TSn bit automatically returns to 0 because it is a trigger bit.	TEn = 1, and count operation starts. Value of TDRn is loaded to TCRn at the count clock input. INTTMn is generated and TOn performs toggle operation if the MDn0 bit of the TMRn register is 1.
During operation	Set values of TMRn register, TOMn, and TOLn bits cannot be changed. Set value of the TDRn register can be changed. The TCRn register can always be read. The TSRn register is not used. Set values of the TO0 and TOE0 registers can be changed.	Counter (TCRn) counts down. When count value reaches 0000H, the value of TDRn is loaded to TCRn again and the count operation is continued. By detecting TCRn = 0000H, INTTMn is generated and TOn performs toggle operation. After that, the above operation is repeated.
Operation stop	The TTn bit is set to 1. → The TTn bit automatically returns to 0 because it is a trigger bit.	TEn = 0, and count operation stops. TCRn holds count value and stops. The TOn output is not initialized but holds current status.
	TOEn is cleared to 0 and value is set to TOn bit. →	The TOn pin outputs the TOn set level.
TAUS stop	To hold the TOn pin output level Clears TOn bit to 0 after the value to be held is set to the port register. →	The TOn pin output level is held by port function.
	When holding the TOn pin output level is not necessary Switches the port mode register to input mode. →	The TOn pin output level goes into Hi-Z output state.
	The TAU0EN bit of the PER2 register is cleared to 0. →	Power-off status All circuits are initialized and SFR of each channel is also initialized. (The TOn bit is cleared to 0 and the TOn pin is set to port mode.)

Operation is resumed. → Operation start

Remark n = 00 to 11 (n = 02 to 07 and 11 for timer output pin (TOn) of 78K0R/IB3)

6.7.2 Operation as external event counter

The timer array unit can be used as an external event counter that counts the number of times the valid input edge (external event) is detected in the TIn pin. When a specified count value is reached, the event counter generates an interrupt. The specified number of counts can be calculated by the following expression.

Specified number of counts = Set value of TDRn + 1

TCRn operates as a down counter in the event counter mode.

The TCRn loads the value of TDRn by setting any channel start trigger bit (TSn) of timer channel start register 0 (TS0) to 1.

TCRn counts down each time the valid input edge of the TIn pin has been detected. When TCRn = 0000H, TCRn loads the value of TDRn again, and outputs INTTMn.

After that, the above operation is repeated.

An irregular waveform that depends on external events is output from the TO0 pin. Stop the output by setting the TOEn bit of timer output enable register 0 (TOE0) to 0.

TDRn can be rewritten at any time. The new value of TDRn becomes valid during the next count period.

Figure 6-40. Block Diagram of Operation as External Event Counter

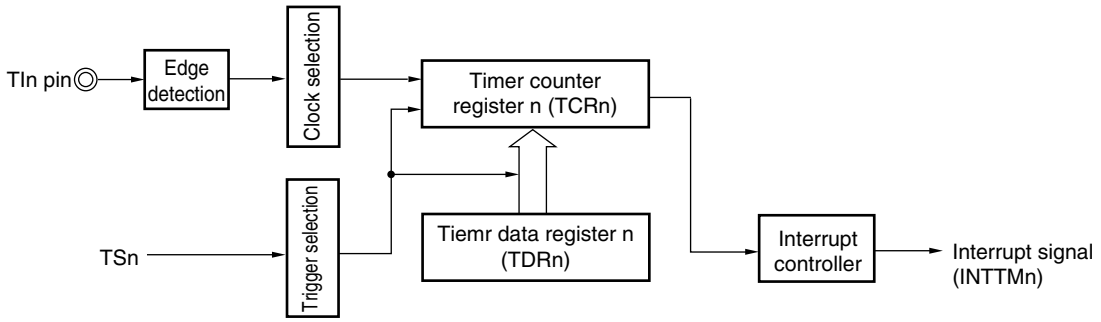

Remark n = 00 to 11 (78K0R/IB3: n = 02 to 07 and 09)

Figure 6-41. Example of Basic Timing of Operation as External Event Counter

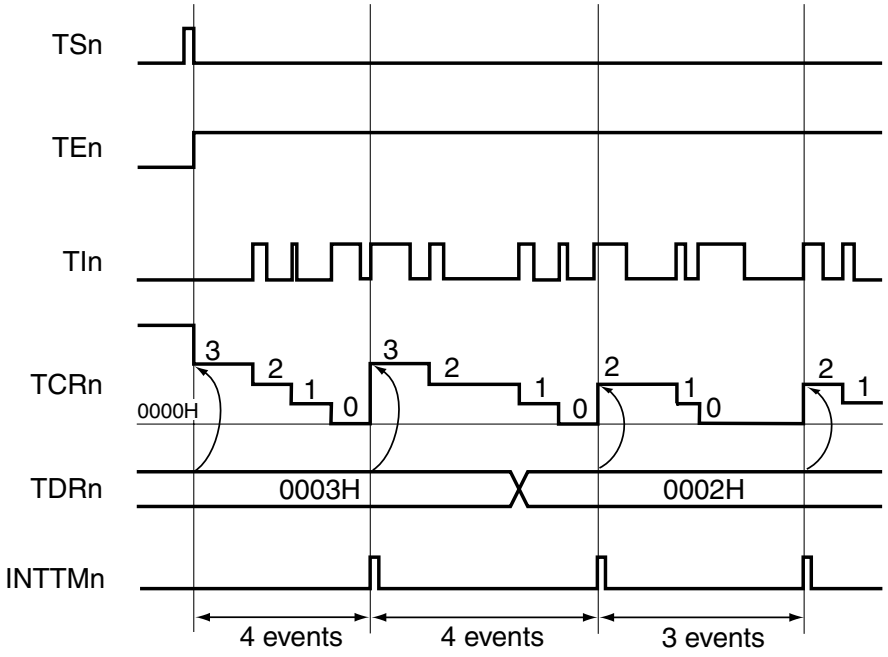

Remarks 1. n = 00 to 11 (78K0R/IB3: n = 02 to 07 and 09)

2. TSn: Bit n of timer channel start register 0 (TS0)

TEn: Bit n of timer channel enable status register 0 (TE0)

TIn: TIn pin input signal

TCRn: Timer counter register n (TCRn)

TDRn: Timer data register n (TDRn)

Figure 6-42. Example of Set Contents of Registers in External Event Counter Mode

(a) Timer mode register n (TMRn)

	15	14	13	12	11	10	9	8	7	6	5	4	3	2	1	0
TMRn	CKSn		CCS1n	CCS0n	MAS TERn	STSn2	STSn1	STSn0	CISn1	CISn0		MDn4	MDn3	MDn2	MDn1	MDn0
	1/0	0	0	1	0	0	0	0	1/0	1/0	0	0	0	1	1	0

Operation mode of channel n
0011B: Event count mode

Setting of operation when counting is started
0: Neither generates INTTMn nor inverts timer output when counting is started.

Selection of TIn pin input edge
00B: Detects falling edge.
01B: Detects rising edge.
10B: Detects both edges.
11B: Setting prohibited

Start trigger selection
000B: Selects only software start.

Slave/master selection
0: Independent channel operation function

Count clock selection
01B: Selects the TIn pin input valid edge.

Operation clock selection
0: Selects CK00 (channels 0 to 7) or CK02 (channels 8 to 11) as operation clock of channel n.
1: Selects CK01 (channels 0 to 7) or CK03 (channels 8 to 11) as operation clock of channel n.

(b) Timer output register 0 (TO0)

	Bit n
TO0	TOn
	0

0: Outputs 0 from TOn.

(c) Timer output enable register 0 (TOE0)

	Bit n
TOE0	TOEn
	0

0: Stops the TOn output operation by counting operation.

(d) Timer output level register 0 (TOL0)

	Bit n
TOL0	TOLn
	0

0: Cleared to 0 when TOMn = 0 (master channel output mode).

(e) Timer output mode register 0 (TOM0)

	Bit n
TOM0	TOMn
	0

0: Sets master channel output mode.

Remark n = 00 to 11 (78K0R/IB3: n = 02 to 07 and 09)

Figure 6-43. Operation Procedure When External Event Counter Function Is Used

	Software Operation	Hardware Status
TAUS default setting		Power-off status (Clock supply is stopped and writing to each register is disabled.)
	Sets the TAU0EN bit of the PER2 register to 1. →	Power-on status. Each channel stops operating. (Clock supply is started and writing to each register is enabled.)
	Sets the TPS0 register. Determines the clock frequencies of CK00 and CK01 for channels 0 to 7, and those of CK02 and CK03 for channels 8 to 11.	
Channel default setting	Sets the TMRn register (determines operation mode of channel). Sets number of counts to the TDRn register. Clears the TOEn bit of the TOE0 register to 0.	Channel stops operating. (Clock is supplied and some power is consumed.)
Operation start	Sets the TSn bit to 1. →	TEn = 1, and count operation starts. Value of TDRn is loaded to TCRn and detection of the TIn pin input edge is awaited.
During operation	Set value of the TDRn register can be changed. The TCRn register can always be read. The TSRn register is not used. Set values of TMRn register, TOMn, TOLn, TOn, and TOEn bits cannot be changed.	Counter (TCRn) counts down each time input edge of the TIn pin has been detected. When count value reaches 0000H, the value of TDRn is loaded to TCRn again, and the count operation is continued. By detecting TCRn = 0000H, the INTTMn output is generated. After that, the above operation is repeated.
Operation stop	The TTn bit is set to 1. →	TEn = 0, and count operation stops. TCRn holds count value and stops.
TAUS stop	The TAU0EN bit of the PER2 register is cleared to 0. →	Power-off status All circuits are initialized and SFR of each channel is also initialized.

Operation is resumed.

Remark n = 00 to 11 (78K0R/IB3: n = 02 to 07 and 09)

6.7.3 Operation as frequency divider(44-pin and 48-pin products of 78K0R/IC3, 78K0R/ID3 and 78K0R/IE3 only.)

The timer array unit can be used as a frequency divider that divides a clock input to the TIn pin and outputs the result from TOn.

The divided clock frequency output from TOn can be calculated by the following expression.

- When rising edge/falling edge is selected:
  Divided clock frequency = Input clock frequency/{(Set value of TDRn + 1) × 2}
- When both edges are selected:
  Divided clock frequency ≅ Input clock frequency/(Set value of TDRn + 1)

TCRn operates as a down counter in the interval timer mode.

After the channel start trigger bit (TSn) of timer channel start register 0 (TS0) is set to 1, the TCRn loads the value of TDRn when the TIn valid edge is detected. If MDn0 of TMRn = 0 at this time, INTTMn is not output and TOn is not toggled. If MDn0 of TMRn = 1, INTTMn is output and TOn is toggled.

After that, TCRn counts down at the valid edge of TIn. When TCRn = 0000H, it toggles TOn. At the same time, TCRn loads the value of TDRn again, and continues counting.

If detection of both the edges of TIn is selected, the duty factor error of the input clock affects the divided clock period of the TOn output.

The period of the TOn output clock includes a sampling error of one period of the operation clock.

Clock period of TOn output = Ideal TOn output clock period ± Operation clock period (error)

TDRn can be rewritten at any time. The new value of TDRn becomes valid during the next count period.

Figure 6-44. Block Diagram of Operation as Frequency Divider

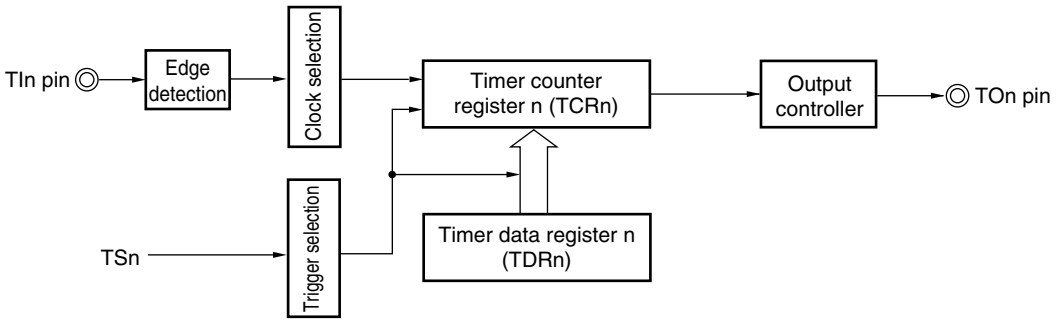

Remark n = 00, 10, 11 (44-pin and 48-pin products of 78K0R/IC3: n = 10 and 11)

Figure 6-45. Example of Basic Timing of Operation as Frequency Divider (Default setting : TOn = 0, MDn0 = 1)

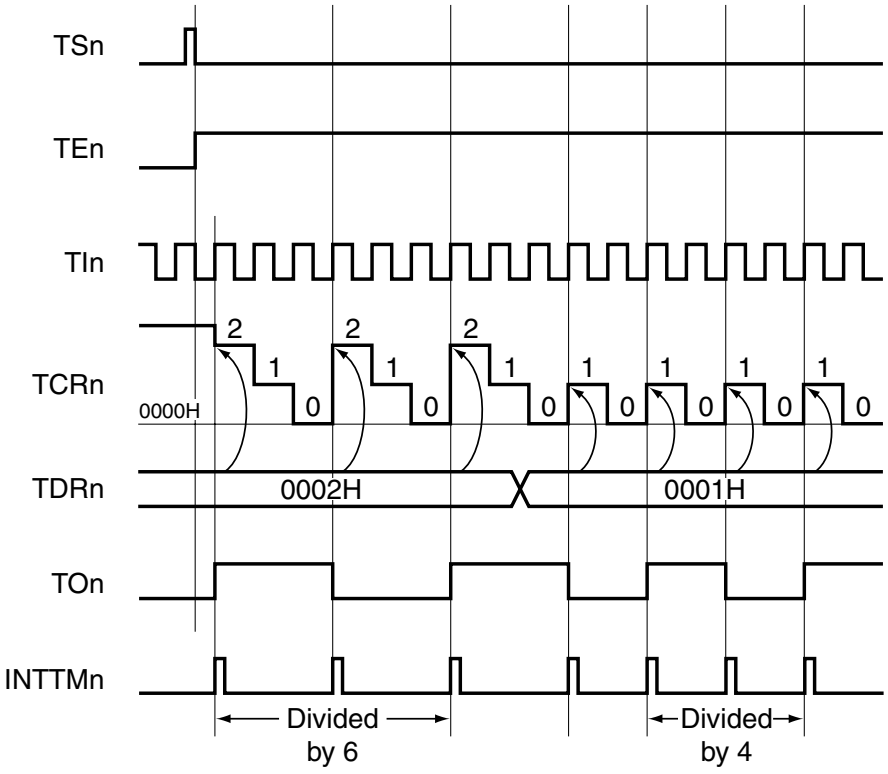

Remarks 1. n = 00, 10 and 11 (44-pin and 48-pin products of 78K0R/IC3: n = 10 and 11)

2. TSn: Bit n of timer channel start register 0 (TS0)

TEn: Bit n of timer channel enable status register 0 (TE0)

TIn: TIn pin input signal

TCRn: Timer counter register n (TCRn)

TDRn: Timer data register n (TDRn)

TOn: TOn pin output signal

Figure 6-46. Example of Set Contents of Registers During Operation as Frequency Divider

(a) Timer mode register n (TMRn)

	15	14	13	12	11	10	9	8	7	6	5	4	3	2	1	0
TMRn	CKSn		CCS1n	CCS0n	MAS TERn	STSn2	STSn1	STSn0	CISn1	CISn0		MDn4	MDn3	MDn2	MDn1	MDn0
	1/0	0	0	1	0	0	0	0	1/0	1/0	0	0	0	0	0	1/0

Operation mode of channel n
0000B: Interval timer

Setting of operation when counting is started
0: Neither generates INTTMn nor inverts timer output when counting is started.
1: Generates INTTMn and inverts timer output when counting is started.

Selection of TIn pin input edge
00B: Detects falling edge.
01B: Detects rising edge.
10B: Detects both edges.
11B: Setting prohibited

Start trigger selection
000B: Selects only software start.

Slave/master selection
0: Independent channel operation function

Count clock selection
01B: Selects the TIn pin input valid edge.

Operation clock selection
0: Selects CK00 (channels 0 to 7) or CK02 (channels 8 to 11) as operation clock of channel n.
1: Selects CK01 (channels 0 to 7) or CK03 (channels 8 to 11) as operation clock of channel n.

(b) Timer output register 0 (TO0)

	Bit n
TO0	TOn 1/0

0: Outputs 0 from TOn.
1: Outputs 1 from TOn.

(c) Timer output enable register 0 (TOE0)

	Bit n
TOE0	TOEn 1/0

0: Stops the TOn output operation by counting operation.
1: Enables the TOn output operation by counting operation.

(d) Timer output level register 0 (TOL0)

	Bit n
TOL0	TOLn 0

0: Cleared to 0 when TOMn = 0 (master channel output mode)

(e) Timer output mode register 0 (TOM0)

	Bit n
TOM0	TOMn 0

0: Sets master channel output mode.

Remark n = 00, 10, 11 (44-pin and 48-pin products of 78K0R/IC3: n = 10 and 11)

Figure 6-47. Operation Procedure When Frequency Divider Function Is Used

	Software Operation	Hardware Status
TAUS default setting		Power-off status (Clock supply is stopped and writing to each register is disabled.)
	Sets the TAU0EN bit of the PER2 register to 1.	Power-on status. Each channel stops operating. (Clock supply is started and writing to each register is enabled.)
	Sets the TPS0 register. Determines the clock frequencies of CK00 and CK01 for channels 0 to 7, and those of CK02 and CK03 for channels 8 to 11.	
Channel default setting	Sets the TMRn register (determines the operation mode of the channel and selects the detection edge). Sets interval (period) value to the TDRn register.	Channel stops operating. (Clock is supplied and some power is consumed.)
	Clears the TOMn bit of the TOM0 register to 0 (master channel output mode). Clears the TOLn bit to 0. Sets the TOn bit and determines default level of the TOn output.	The TOn pin goes into Hi-Z output state. The TOn default setting level is output when the port mode register is in output mode and the port register is 0.
	Sets TOEn to 1 and enables operation of TOn.	TOn does not change because channel stops operating.
	Clears the port register and port mode register to 0.	The TOn pin outputs the TOn set level.
Operation start	Sets the TOEn to 1 (only when operation is resumed). Sets the TSn bit to 1. The TSn bit automatically returns to 0 because it is a trigger bit.	TEn = 1, and count operation starts. Value of TDRn is loaded to TCRn at the count clock input. INTTMn is generated and TOn performs toggle operation if the MDn0 bit of the TMRn register is 1.
During operation	Set value of the TDRn register can be changed. The TCRn register can always be read. The TSRn register is not used. Set values of TO0 and TOE0 registers can be changed. Set values of TMRn register, TOMn, and TOLn bits cannot be changed.	Counter (TCRn) counts down. When count value reaches 0000H, the value of TDRn is loaded to TCRn again, and the count operation is continued. By detecting TCRn = 0000H, INTTMn is generated and TOn performs toggle operation. After that, the above operation is repeated.
Operation stop	The TTn bit is set to 1. The TTn bit automatically returns to 0 because it is a trigger bit.	TEn = 0, and count operation stops. TCRn holds count value and stops. The TOn output is not initialized but holds current status.
	TOEn is cleared to 0 and value is set to the TO0n bit.	The TOn pin outputs the TOn set level.
TAUS stop	To hold the TOn pin output level Clears TOn bit to 0 after the value to be held is set to the port register.	The TOn pin output level is held by port function.
	When holding the TOn pin output level is not necessary Switches the port mode register to input mode.	The TOn pin output level goes into Hi-Z output state.
	The TAU0EN bit of the PER2 register is cleared to 0.	Power-off status All circuits are initialized and SFR of each channel is also initialized. (The TOn bit is cleared to 0 and the TOn pin is set to port mode).

Operation is resumed.

Remark n = 00, 10, 11 (44-pin and 48-pin products of 78K0R/IC3: n = 10 and 11)

6.7.4 Operation as input pulse interval measurement

The count value can be captured at the TIn valid edge and the interval of the pulse input to TIn can be measured. The pulse interval can be calculated by the following expression.

TIn input pulse interval = Period of count clock × ((10000H × TSRn: OVF) + (Capture value of TDRn + 1))

Caution The TIn pin input is sampled using the operating clock selected with the CKSn bit of the TMRn register, so an error of up to one operating clock cycle occurs.

TCRn operates as an up counter in the capture mode.

When the channel start trigger (TS0n) of timer channel start register (TS0) is set to 1, TCRn counts up from 0000H in synchronization with the count clock.

When the TIn pin input valid edge is detected, the count value of TCRn register is transferred (captured) to TDRn and, at the same time, the TCRn register is cleared to 0000H, and the INTTMn is output. If the counter overflows at this time, the OVF bit of the TSRn register is set to 1. If the counter does not overflow, the OVF bit is cleared. After that, the above operation is repeated.

At the same time that the count value is captured to the TDRn register, the OVF bit of the TSRn register is updated depending on whether the counter overflows during the measurement period. Therefore, the overflow status of the captured value can be checked.

If the counter reaches a full count for two or more periods, it is judged to be an overflow occurrence, and the OVF bit of the TSRn register is set to 1. However, a normal interval value cannot be measured for the OVF bit, if two or more overflows occur.

Set STSn2 to STSn0 of the TMRn register to 001B to use the valid edges of TIn as a start trigger and a capture trigger.

When TEn = 1, a software operation (TSn = 1) can be used as a capture trigger, instead of using the TI0n pin input.

Figure 6-48. Block Diagram of Operation as Input Pulse Interval Measurement

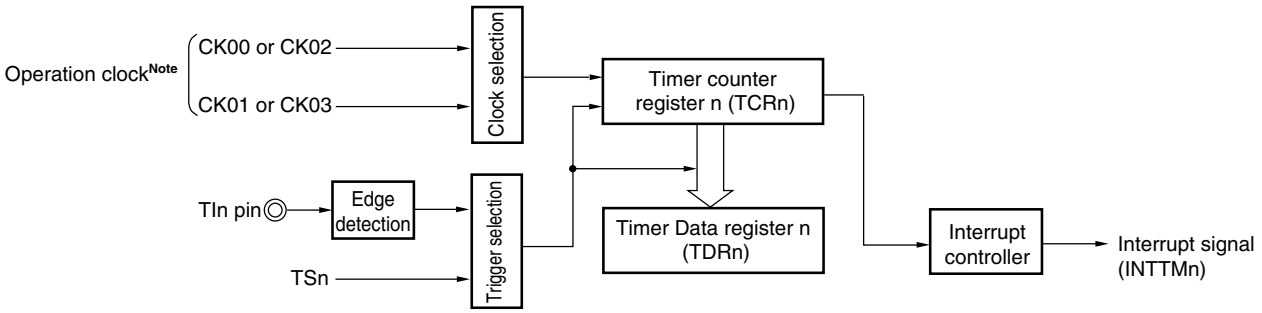

Note The operation clocks of channels 0 to 7 are selected from CK00 and CK01, and those of channels 8 to 11 from CK02 and CK03.

Remark n = 00 to 11 (78K0R/IB3: n = 02 to 07 and 09)

Figure 6-49. Example of Basic Timing of Operation as Input Pulse Interval Measurement (Default setting : TOn = 0, MDn0 = 1)

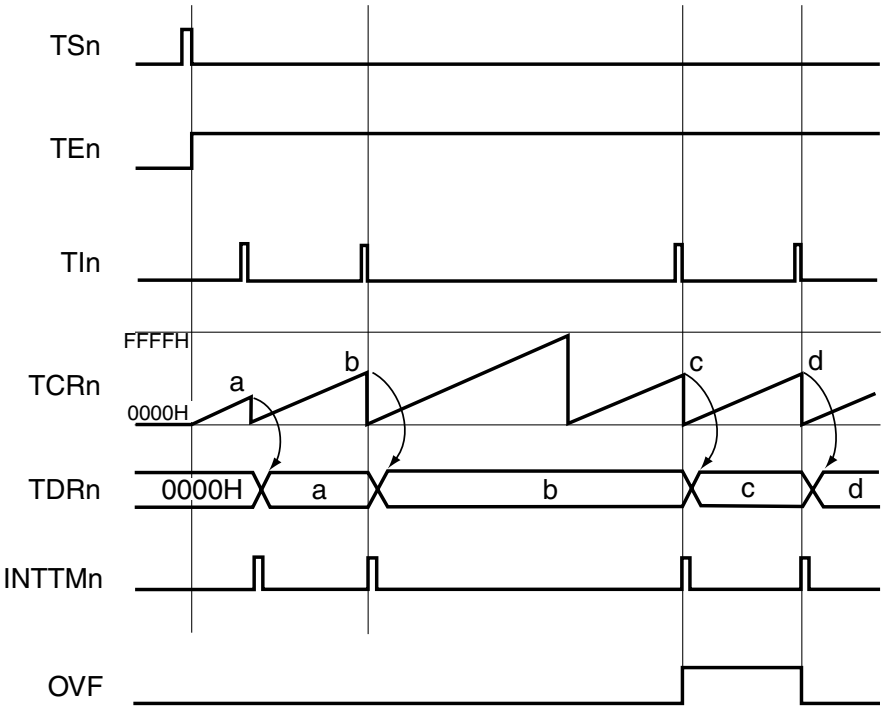

Remarks 1. n = 00 to 11 (78K0R/IB3: n = 02 to 07 and 09)

2. TSn: Bit n of timer channel start register 0 (TS0)
TEn: Bit n of timer channel enable status register 0 (TE0)
TIn: TIn pin input signal
TCRn: Timer counter register n (TCRn)
TDRn: Timer data register n (TDRn)
OVF: Bit 0 of timer status register n (TSRn)

Figure 6-50. Example of Set Contents of Registers to Measure Input Pulse Interval

(a) Timer mode register n (TMRn)

	15	14	13	12	11	10	9	8	7	6	5	4	3	2	1	0
TMRn	CKSn		CCS1n	CCS0n	MAS TERn	STSn2	STSn1	STSn0	CISn1	CISn0		MDn4	MDn3	MDn2	MDn1	MDn0
	1/0	0	0	0	0	0	0	1	1/0	1/0	0	0	0	1	0	1/0

Operation mode of channel n
0010B: Capture mode

Setting of operation when counting is started
0: Does not generate INTTMn when counting is started.
1: Generates INTTMn when counting is started.

Selection of TIn pin input edge
00B: Detects falling edge.
01B: Detects rising edge.
10B: Detects both edges.
11B: Setting prohibited

Capture trigger selection
001B: Selects the TIn pin input valid edge.

Slave/master selection
0: Independent channel operation function

Count clock selection
00B: Selects operation clock

Operation clock selection
0: Selects CK00 (channels 0 to 7) or CK02 (channels 8 to 11) as operation clock of channel n.
1: Selects CK01 (channels 0 to 7) or CK03 (channels 8 to 11) as operation clock of channel n.

(b) Timer output register 0 (TO0)

	Bit n
TO0	TOn
	0

0: Outputs 0 from TOn.

(c) Timer output enable register 0 (TOE0)

	Bit n
TOE0	TOEn
	0

0: Stops TOn output operation by counting operation.

(d) Timer output level register 0 (TOL0)

	Bit n
TOL0	TOLn
	0

0: Cleared to 0 when TOMn = 0 (master channel output mode).

(e) Timer output mode register 0 (TOM0)

	Bit n
TOM0	TOMn
	0

0: Sets master channel output mode.

Remark n = 00 to 11 (78K0R/IB3: n = 02 to 07 and 09)

Figure 6-51. Operation Procedure When Input Pulse Interval Measurement Function Is Used

	Software Operation	Hardware Status
TAUS default setting		Power-off status (Clock supply is stopped and writing to each register is disabled.)
	Sets the TAU0EN bit of the PER2 register to 1. →	Power-on status. Each channel stops operating. (Clock supply is started and writing to each register is enabled.)
	Sets the TPS0 register. Determines the clock frequencies of CK00 and CK01 for channels 0 to 7, and those of CK02 and CK03 for channels 8 to 11.	
Channel default setting	Sets the TMRn register (determines operation mode of channel).	Channel stops operating. (Clock is supplied and some power is consumed.)
Operation start	Sets TSn bit to 1. →	TEn = 1, and count operation starts. TCRn is cleared to 0000H at the count clock input. When the MDn0 bit of the TMRn register is 1, INTTMn is generated.
During operation	Set values of only the CISn1 and CISn0 bits of the TMRn register can be changed. The TDRn register can always be read. The TCRn register can always be read. The TSRn register can always be read. Set values of TOMn, TOLn, TOn, and TOEn bits cannot be changed.	Counter (TCRn) counts up from 0000H. When the TIn pin input valid edge is detected, the count value is transferred (captured) to TDRn. At the same time, TCRn is cleared to 0000H, and the INTTMn signal is generated. If an overflow occurs at this time, the OVF bit of the TSRn register is set; if an overflow does not occur, the OVF bit is cleared. After that, the above operation is repeated.
Operation stop	The TTn bit is set to 1. →	TEn = 0, and count operation stops. TCRn holds count value and stops. The OVF bit of the TSRn register is also held.
TAUS stop	The TAU0EN bit of the PER2 register is cleared to 0. →	Power-off status All circuits are initialized and SFR of each channel is also initialized.

Operation is resumed.

Remark n = 00 to 11 (78K0R/IB3: n = 02 to 07 and 09)

6.7.5 Operation as input signal high-/low-level width measurement

Caution When using a channel to implement the LIN-bus, set bit 1 (ISC1) of the input switch control register (ISC) to 1. RxD0 signal will be input to the channel 7.
Also, when RxD0 functions alternately as a timer input pin, the corresponding timer input pin channels can also be used for the LIN-bus function. The timer channels in each version of the 78K0R/Ix3 that can be used for the LIN-bus function in addition to timer channel 7 are shown below.

78K0R/IB3 (P11/RxD0/TI03/TO03)	**: Channel 3 of TAUS**
38-pin products of 78K0R/IC3 (P72/INTP6/RxD0)	**: None**
44-pin and 48-pin products of 78K0R/IC3, 78K0R/ID3, 78K0R/IE3 (P74/RxD0/TI10/SI00)	**: Chanel 10 of TAUS**

When using a channel to implement the LIN-bus, Read "TIn" as "RxD0" in the following description.

By starting counting at one edge of TIn and capturing the number of counts at another edge, the signal width (high-level width/low-level width) of TIn can be measured. The signal width of TIn can be calculated by the following expression.

Signal width of TIn input = Period of count clock × ((10000H × TSRn: OVF) + (Capture value of TDRn + 1))

Caution The TIn pin input is sampled using the operating clock selected with the CKSn bit of the TMRn register, so an error equivalent to one operation clock occurs.

TCRn operates as an up counter in the capture & one-count mode.

When the channel start trigger (TSn) of the timer channel start register 0 (TS0) is set to 1, TEn is set to 1 and the TIn pin start edge detection wait status is set.

When the TIn start edge (rising edge of TIn pin input when the high-level width is to be measured) is detected, the counter counts up from 0000H in synchronization with the count clock. When the valid capture edge (falling edge of TIn when the high-level width is to be measured) is detected later, the count value is transferred to TDRn and, at the same time, INTTMn is output. If the counter overflows at this time, the OVF bit of the TSRn register is set to 1. If the counter does not overflow, the OVF bit is cleared. TCRn stops at the value "value transferred to TDRn + 1", and the TIn pin start edge detection wait status is set. After that, the above operation is repeated.

At the same time that the count value is captured to the TDRn register, the OVF bit of the TSRn register is updated depending on whether the counter overflows during the measurement period. Therefore, the overflow status of the captured value can be checked.

If the counter reaches a full count for two or more periods, it is judged to be an overflow occurrence, and the OVF bit of the TSRn register is set to 1. However, the correct value of high/low level width cannot be measured for the OVF bit, if two or more overflows occur.

Whether the high-level width or low-level width of the TIn pin is to be measured can be selected by using the CISn1 and CISn0 bits of the TMRn register.

Because this function is used to measure the signal width of the TIn pin input, TSn cannot be set to 1 while TEn is 1.

CISn1, CISn0 of TMRn = 10B: Low-level width is measured.
CISn1, CISn0 of TMRn = 11B: High-level width is measured.

Remark n = 00 to 11 (78K0R/IB3: n = 02 to 07 and 09)

Figure 6-52. Block Diagram of Operation as Input Signal High-/Low-Level Width Measurement

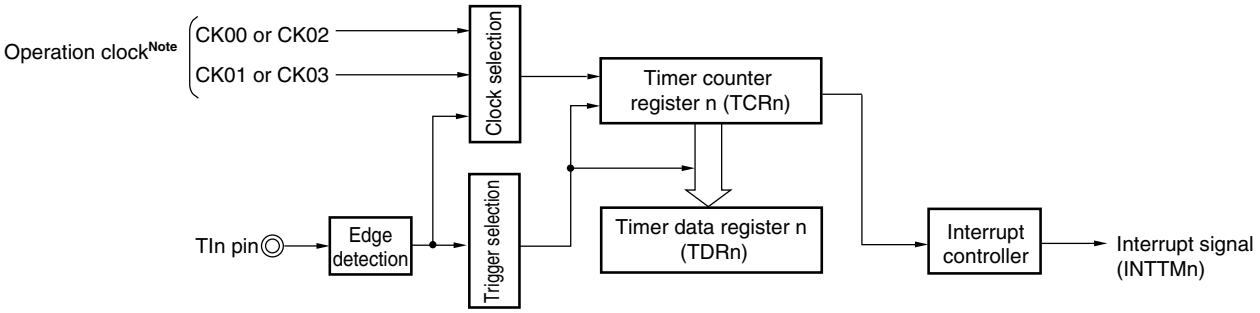

Note The operation clocks of channels 0 to 7 are selected from CK00 and CK01, and those of channels 8 to 11 from CK02 and CK03.

Remark n = 00 to 11 (78K0R/IB3: n = 02 to 07 and 09)

Figure 6-53. Example of Basic Timing of Operation as Input Signal High-Level Width Measurement

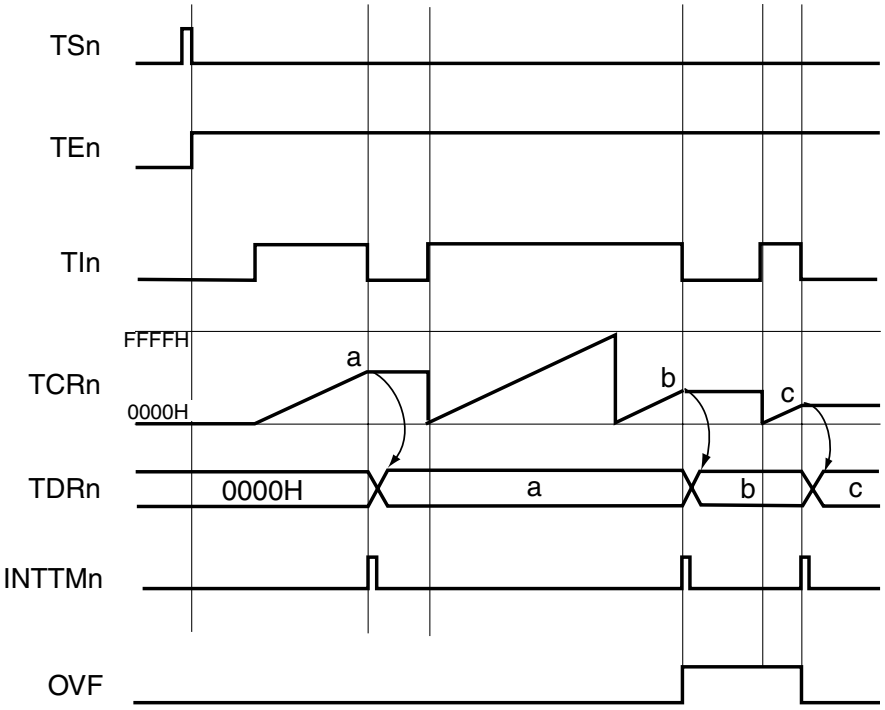

Remarks 1. n = 00 to 11 (78K0R/IB3: n = 02 to 07 and 09)

2. TSn: Bit n of timer channel start register 0 (TS0)
TEn: Bit n of timer channel enable status register 0 (TE0)
TIn: TIn pin input signal
TCRn: Timer counter register n (TCRn)
TDRn: Timer data register n (TDRn)
OVF: Bit 0 of Timer status register n (TSRn)

Figure 6-54. Example of Set Contents of Registers to Measure Input Signal High-/Low-Level Width

(a) Timer mode register n (TMRn)

	15	14	13	12	11	10	9	8	7	6	5	4	3	2	1	0
TMRn	CKSn		CCS1n	CCS0n	MAS TERn	STSn2	STSn1	STSn0	CISn1	CISn0		MDn4	MDn3	MDn2	MDn1	MDn0
	1/0	0	0	0	0	0	1	0	1	1/0	0	0	1	1	0	0

Operation mode of channel n
0110B: Capture & one-count

Setting of operation when counting is started
0: Does not generate INTTMn when counting is started.

Selection of TIn pin input edge
10B: Both edges (to measure low-level width)
11B: Both edges (to measure high-level width)

Start trigger selection
010B: Selects the TIn pin input valid edge.

Slave/master selection
0: Independent channel operation function

Count clock selection
00B: Selects operation clock

Operation clock selection
0: Selects CK00 (channels 0 to 7) or CK02 (channels 8 to 11) as operation clock of channel n.
1: Selects CK01 (channels 0 to 7) or CK03 (channels 8 to 11) as operation clock of channel n.

(b) Timer output register 0 (TO0)

	Bit n
TO0	TOn
	0

0: Outputs 0 from TOn.

(c) Timer output enable register 0 (TOE0)

	Bit n
TOE0	TOEn
	0

0: Stops the TOn output operation by counting operation.

(d) Timer output level register 0 (TOL0)

	Bit n
TOL0	TOLn
	0

0: Cleared to 0 when TOMn = 0 (master channel output mode).

(e) Timer output mode register 0 (TOM0)

	Bit n
TOM0	TOMn
	0

0: Sets master channel output mode.

Remark n = 00 to 11 (78K0R/IB3: n = 02 to 07 and 09)

Figure 6-55. Operation Procedure When Input Signal High-/Low-Level Width Measurement Function Is Used

	Software Operation	Hardware Status
TAUS default setting		Power-off status (Clock supply is stopped and writing to each register is disabled.)
	Sets the TAU0EN bit of the PER2 register to 1. →	Power-on status. Each channel stops operating. (Clock supply is started and writing to each register is enabled.)
	Sets the TPS0 register. Determines the clock frequencies of CK00 and CK01 for channels 0 to 7, and those of CK02 and CK03 for channels 8 to 11.	
Channel default setting	Sets the TMRn register (determines operation mode of channel). Clears TOEn to 0 and stops operation of TOn.	Channel stops operating. (Clock is supplied and some power is consumed.)
Operation start	Sets the TSn bit to 1. →	TEn = 1, and the TIn pin start edge detection wait status is set.
	Detects TIn pin input count start valid edge. →	Clears TCRn to 0000H and starts counting up.
During operation	Set value of the TDRn register can be changed. The TCRn register can always be read. The TSRn register is not used. Set values of TMRn register, TOMn, TOLn, TOn, and TOEn bits cannot be changed.	When the TIn pin start edge is detected, the counter (TCRn) counts up from 0000H. If a capture edge of the TIn pin is detected, the count value is transferred to TDRn and INTTMn is generated. If an overflow occurs at this time, the OVF bit of the TSRn register is set; if an overflow does not occur, the OVF bit is cleared. TCRn stops the count operation until the next TIn pin start edge is detected. After that, the above operation is repeated.
Operation stop	The TTn bit is set to 1. →	TEn = 0, and count operation stops. TCRn holds count value and stops. The OVF bit of the TSRn register is also held.
TAUS stop	The TAU0EN bit of PER2 register is cleared to 0. →	Power-off status All circuits are initialized and SFR of each channel is also initialized.

Operation is resumed.

Remark n = 00 to 11 (78K0R/IB3: n = 02 to 07 and 09)

6.8 Simultaneous Channel Operation Function of Timer Array Unit TAUS

6.8.1 Operation as one-shot pulse output function

By using two channels as a set, a one-shot pulse having any delay pulse width can be generated from the signal input to the TIn pin.

The delay time and pulse width can be calculated by the following expressions.

Delay time = {Set value of TDRn (master) + 2} × Count clock period
Pulse width = {Set value of TDRm (slave)} × Count clock period

The master channel operates in the one-count mode and counts the pulse delay time. TCRn of the master channel starts operating when a start trigger is detected, and loads the value of TDRn. TCRn counts down from the value of TDRn it has loaded, in synchronization with the count clock. When TCRn = 0000H, it outputs INTTMn and stops counting until the next start trigger is detected.

The slave channel operates in the one-count mode and counts the pulse width. TCRm of the slave channel starts operation using INTTMn of the master channel as a start trigger, and loads the value of TDRm. TCRm counts down from the value of TDRm it has loaded, in synchronization with the count value. When the count value = 0000H, it outputs INTTMm and stops counting until the next start trigger (INTTMn of the master channel) is detected. The output level of TOm becomes active one count clock after generation of INTTMn from the master channel, and inactive when TCRm = 0000H.

Instead of using the TIn pin input, a one-shot pulse can also be output using the software operation (TSn = 1) as a start trigger.

Caution The timing of loading of TDRn of the master channel is different from that of TDRm of the slave channel. If TDRn and TDRm are rewritten during operation, therefore, an illegal waveform is output. Rewrite the TDRn register after INTTMn is generated and the TDRm register after INTTMm is generated.

Remark n = 00, 02, 04, 06, 08, 10 (78K0R/IB3: n = 02, 04, 06 and 10)
m = n + 1

Figure 6-56. Block Diagram of Operation as One-Shot Pulse Output Function

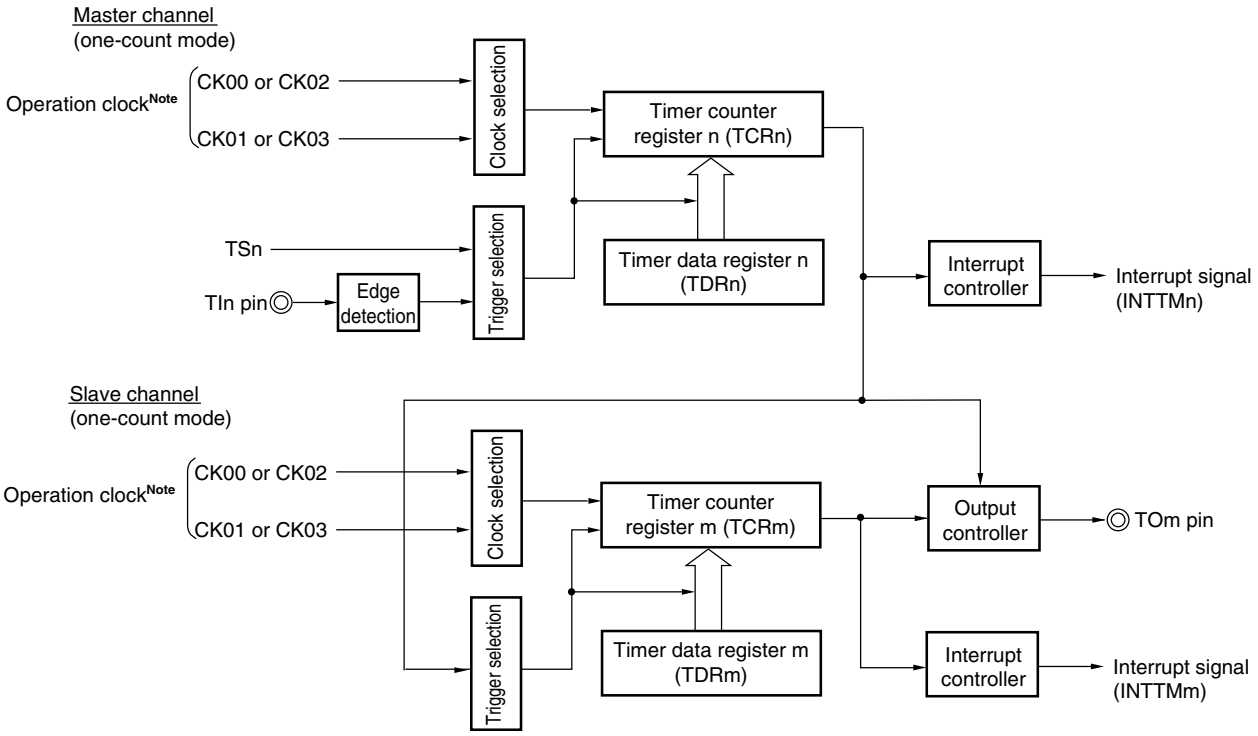

Note The operation clocks of channels 0 to 7 are selected from CK00 and CK01, and those of channels 8 to 11 from CK02 and CK03.

Remark n = 00, 02, 04, 06, 08, 10 (78K0R/IB3: n = 02, 04, 06 and 10)
m = n + 1

Figure 6-57. Example of Basic Timing of Operation as One-Shot Pulse Output Function

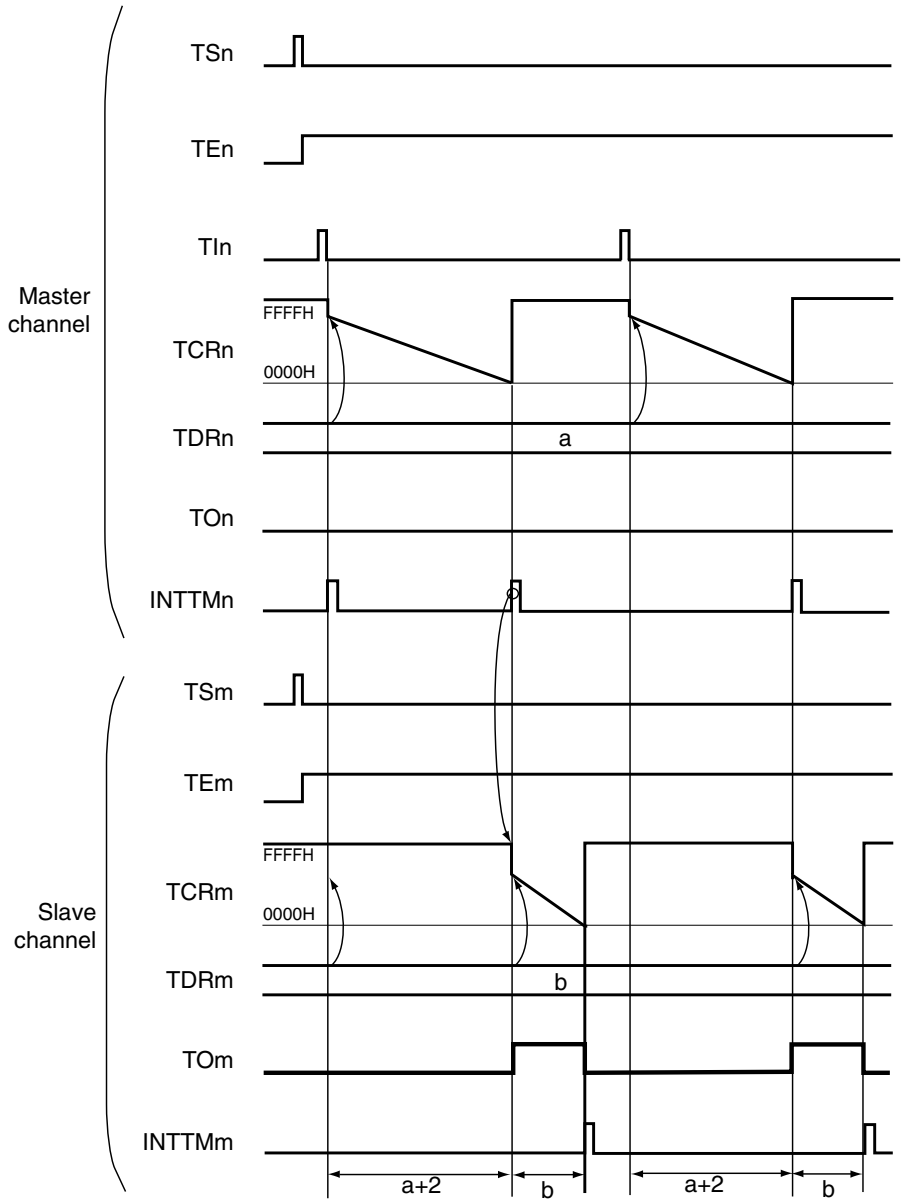

Remarks 1. n = 00, 02, 04, 06, 08, 10 (78K0R/IB3: n = 02, 04, 06 and 10)
m = n + 1

2. TSn, TSm: Bits n, m of timer channel start register 0 (TS0)
TEn, TEm: Bits n, m of timer channel enable status register 0 (TE0)
TIn, Tim: TIn, TIm pins input signal
TCRn, TCRm: Timer counter registers n, m (TCRn, TCRm)
TDRn, TDRm: Timer data registers n, m (TDRn, TDRm)
TOn, TOm: TOn, TOm pins output signal

Figure 6-58. Example of Set Contents of Registers When One-Shot Pulse Output Function (Master Channel) Is Used

(a) Timer mode register n (TMRn)

	15	14	13	12	11	10	9	8	7	6	5	4	3	2	1	0
TMRn	CKSn		CCS1n	CCS0n	MAS TERn	STSn2	STSn1	STSn0	CISn1	CISn0		MDn4	MDn3	MDn2	MDn1	MDn0
	1/0	0	0	0	1	0	0	1	1/0	1/0	0	0	1	0	0	0

Operation mode of channel n
0100B: One-count mode

Start trigger during operation
0: Trigger input is invalid.

Selection of TIn pin input edge
00B: Detects falling edge.
01B: Detects rising edge.
10B: Detects both edges.
11B: Setting prohibited

Start trigger selection
001B: Selects the TIn pin input valid edge.

Slave/master selection
1: Master channel

Count clock selection
00B: Selects operation clock.

Operation clock selection
0: Selects CK00 (channels 0 to 7) or CK02 (channels 8 to 11) as operation clock of channel n.
1: Selects CK01 (channels 0 to 7) or CK03 (channels 8 to 11) as operation clock of channel n.

(b) Timer output register 0 (TO0)

	Bit n
TO0	TOn
	0

0: Outputs 0 from TOn.

(c) Timer output enable register 0 (TOE0)

	Bit n
TOE0	TOEn
	0

0: Stops the TOn output operation by counting operation.

(d) Timer output level register 0 (TOL0)

	Bit n
TOL0	TOLn
	0

0: Cleared to 0 when TOMn = 0 (master channel output mode).

(e) Timer output mode register 0 (TOM0)

	Bit n
TOM0	TOMn
	0

0: Sets master channel output mode.

Remark n = 00, 02, 04, 06, 08, 10 (78K0R/IB3: n = 02, 04, 06 and 10)

Figure 6-59. Example of Set Contents of Registers When One-Shot Pulse Output Function (Slave Channel) Is Used

(a) Timer mode register m (TMRm)

	15	14	13	12	11	10	9	8	7	6	5	4	3	2	1	0
TMRm	CKSm		CCS1m	CCS0m	MAS TERm	STSm2	STSm1	STSm0	CISm1	CISm0		MDm4	MDm3	MDm2	MDm1	MDm0
	1/0	0	0	0	0	1	0	0	0	0	0	0	1	0	0	0

Operation mode of channel m
0100B: One-count mode

Start trigger during operation
0: Trigger input is invalid.

Selection of TIm pin input edge
00B: Sets 00B because these are not used.

Start trigger selection
100B: Selects INTTMn of master channel.

Slave/master selection
0: Slave channel

Count clock selection
00B: Selects operation clock.

Operation clock selection
0: Selects CK00 (channels 0 to 7) or CK02 (channels 8 to 11) as operation clock of channel m.
1: Selects CK01 (channels 0 to 7) or CK03 (channels 8 to 11) as operation clock of channel m.
* Make the same setting as master channel.

(b) Timer output register 0 (TO0)

	Bit m
TO0	TOm 1/0

0: Outputs 0 from TOm.
1: Outputs 1 from TOm.

(c) Timer output enable register 0 (TOE0)

	Bit m
TOE0	TOEm 1/0

0: Stops the TOm output operation by counting operation.
1: Enables the TOm output operation by counting operation.

(d) Timer output level register 0 (TOL0)

	Bit m
TOL0	TOLm 1/0

0: Positive logic output (active-high)
1: Inverted output (active-low)

(e) Timer output mode register 0 (TOM0)

	Bit m
TOM0	TOMm 1

1: Sets the slave channel output mode.

Remark n = 00, 02, 04, 06, 08, 10 (78K0R/IB3: n = 02, 04, 06 and 10)
m = n + 1

Figure 6-60. Operation Procedure of One-Shot Pulse Output Function (1/2)

	Software Operation	Hardware Status
TAUS default setting		Power-off status (Clock supply is stopped and writing to each register is disabled.)
	Sets the TAU0EN bit of the PER2 register to 1. →	Power-on status. Each channel stops operating. (Clock supply is started and writing to each register is enabled.)
	Sets the TPS0 register. Determines the clock frequencies of CK00 and CK01 for channels 0 to 7, and those of CK02 and CK03 for channels 8 to 11.	
Channel default setting	Sets the TMRn and TMRm registers of two channels to be used (determines operation mode of channels). An output delay is set to the TDRn register of the master channel, and a pulse width is set to the TDRm register of the slave channel.	Channel stops operating. (Clock is supplied and some power is consumed.)
	Sets slave channel. The TOMm bit of the TOM0 register is set to 1 (slave channel output mode). Sets the TOLm bit. Sets the TOm bit and determines default level of the TOm output. →	The TOm pin goes into Hi-Z output state. The TOm default setting level is output when the port mode register is in output mode and the port register is 0.
	Sets TOEm to 1 and enables operation of TOm. →	TOm does not change because channel stops operating.
	Clears the port register and port mode register to 0. →	The TOm pin outputs the TOm set level.

Remark n = 00, 02, 04, 06, 08, 10 (78K0R/IB3: n = 02, 04, 06 and 10)
m = n + 1

Figure 6-60 Operation Procedure of One-Shot Pulse Output Function (2/2)

Operation is resumed.

	Software Operation	Hardware Status
Operation start	Sets TOEm (slave) to 1 (only when operation is resumed). The TSn (master) and TSm (slave) bits of the TS0 register are set to 1 at the same time. →	TEn and TEm are set to 1 and the master channel enters the TIn input edge detection wait status. Counter stops operating.
	The TSn and TSm bits automatically return to 0 because they are trigger bits.	
	Detects the TIn pin input valid edge of master channel. →	Master channel starts counting.
During operation	Set values of only the CISn1 and CISn0 bits of the TMRn register can be changed. Set values of the TMRm, TDRn, TDRm registers, TOMn, TOMm, TOLn, and TOLm bits cannot be changed. The TCRn and TCRm registers can always be read. The TSRn and TSRm registers are not used. Set values of the TO0 and TOE0 registers can be changed.	Master channel loads the value of TDRn to TCRn when the TIn pin valid input edge is detected, and the counter starts counting down. When the count value reaches TCRn = 0000H, the INTTMn output is generated, and the counter stops until the next valid edge is input to the TIn pin. The slave channel, triggered by INTTMn of the master channel, loads the value of TDRm to TCRm, and the counter starts counting down. The output level of TOm becomes active one count clock after generation of INTTMn from the master channel. It becomes inactive when TCRm = 0000H, and the counting operation is stopped. After that, the above operation is repeated.
Operation stop	The TTn (master) and TTm (slave) bits are set to 1 at the same time. →	TEn, TEm = 0, and count operation stops. TCRn and TCRm hold count value and stops. The TOm output is not initialized but holds current status.
	The TTn and TTm bits automatically return to 0 because they are trigger bits.	
	TOEm of slave channel is cleared to 0 and value is set to the TOm bit. →	The TOm pin outputs the TOm set level.
TAUS stop	To hold the TOm pin output level Clears TOm bit to 0 after the value to be held is set to the port register. →	The TOm pin output level is held by port function.
	When holding the TOm pin output level is not necessary Switches the port mode register to input mode. →	The TOm pin output level goes into Hi-Z output state.
	The TAU0EN bit of the PER2 register is cleared to 0. →	Power-off status All circuits are initialized and SFR of each channel is also initialized. (The TOm bit is cleared to 0 and the TOm pin is set to port mode.)

Remark n = 00, 02, 04, 06, 08, 10 (78K0R/IB3: n = 02, 04, 06 and 10)
m = n + 1

6.8.2 Operation as PWM function

Two channels can be used as a set to generate a pulse of any period and duty factor.

The period and duty factor of the output pulse can be calculated by the following expressions.

Pulse period = {Set value of TDRn (master) + 1} × Count clock period
Duty factor [%] = {Set value of TDRm (slave)}/{Set value of TDRn (master) + 1} × 100
0% output: Set value of TDRm (slave) = 0000H
100% output: Set value of TDRm (slave) ≥ {Set value of TDRn (master) + 1}

Remark The duty factor exceeds 100% if the set value of TDRm (slave) > (set value of TDRn (master) + 1), it summarizes to 100% output.

The master channel operates in interval timer mode. If the channel start trigger bit (TSn) of timer channel start register 0 (TS0) is set to 1, an interrupt (INTTMn) is output, the value set to timer data register n (TDRn) is loaded to timer counter register n (TCRn), and the counter counts down in synchronization with the count clock. When the counter reaches 0000H, INTTMn is output, the value of the TDRn register is loaded again to the TCRn register, and the counter counts down. This operation is repeated until the channel stop trigger bit (TTn) of timer channel stop register 0 (TT0) is set to 1.

If two channels are used to output a PWM waveform, the period until the master channel counts down to 0000H is the PWM output (TOm) cycle.

The slave channel operates in one-count mode. By using INTTMn from the master channel as a start trigger, the TCRm register loads the value of the TDRm register and the counter counts down to 0000H. When the counter reaches 0000H, it outputs INTTMm and waits until the next start trigger (INTTMn from the master channel) is generated.

If two channels are used to output a PWM waveform, the period until the slave channel counts down to 0000H is the PWM output (TOm) duty.

PWM output (TOm) goes to the active level one clock after the master channel generates INTTMn and goes to the inactive level when the TCRm register of the slave channel becomes 0000H.

Caution To rewrite both TDRn of the master channel and TDRm of the slave channel, a write access is necessary two times. The timing at which the values of TDRn and TDRm are loaded to TCRn and TCRm is upon occurrence of INTTMn of the master channel. Thus, when rewriting is performed split before and after occurrence of INTTMn of the master channel, the TOm pin cannot output the expected waveform. To rewrite both TDRn of the master and TDRm of the slave, therefore, be sure to rewrite both the registers immediately after INTTMn is generated from the master channel.

Remark n = 00, 02, 04, 06, 08, 10 (78K0R/IB3: n = 02, 04, 06 and 10)
m = n + 1

Figure 6-61. Block Diagram of Operation as PWM Function

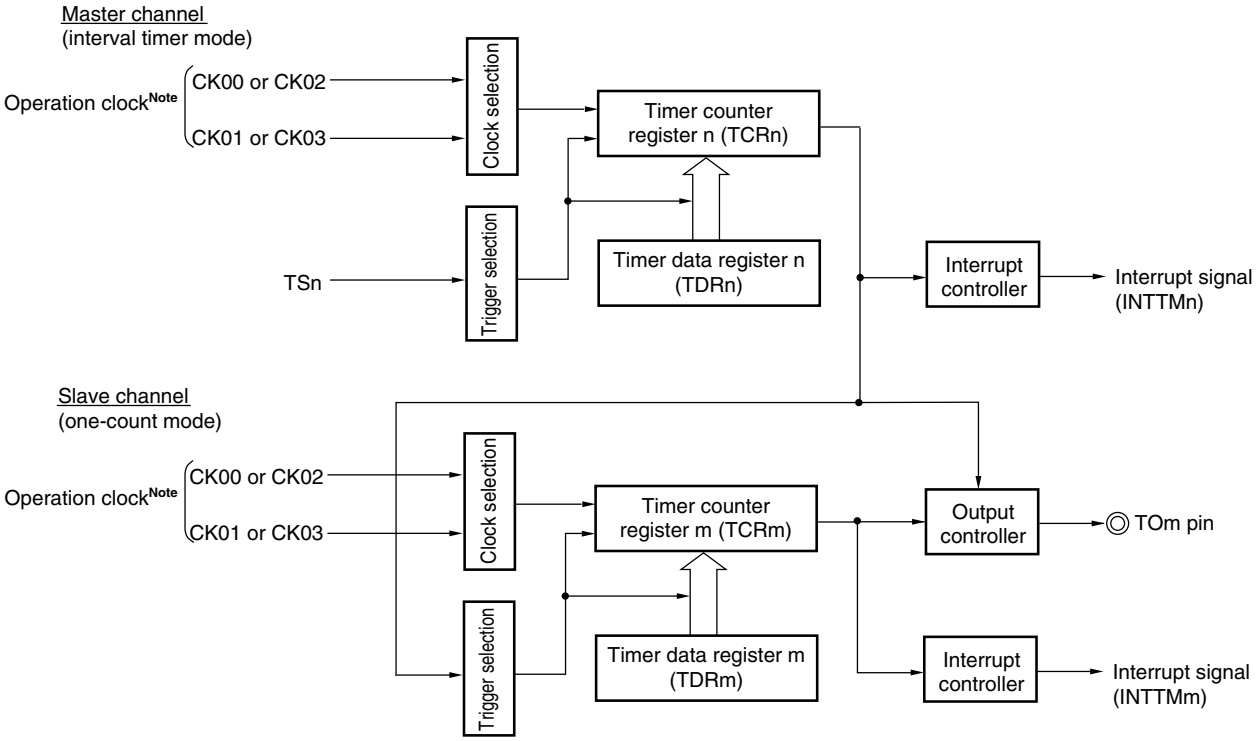

Note The operation clocks of channels 0 to 7 are selected from CK00 and CK01, and those of channels 8 to 11 from CK02 and CK03.

Remark n = 00, 02, 04, 06, 08, 10 (78K0R/IB3: n = 02, 04, 06 and 10)
m = n + 1

Figure 6-62. Example of Basic Timing of Operation as PWM Function (Default setting : TOm = 0)

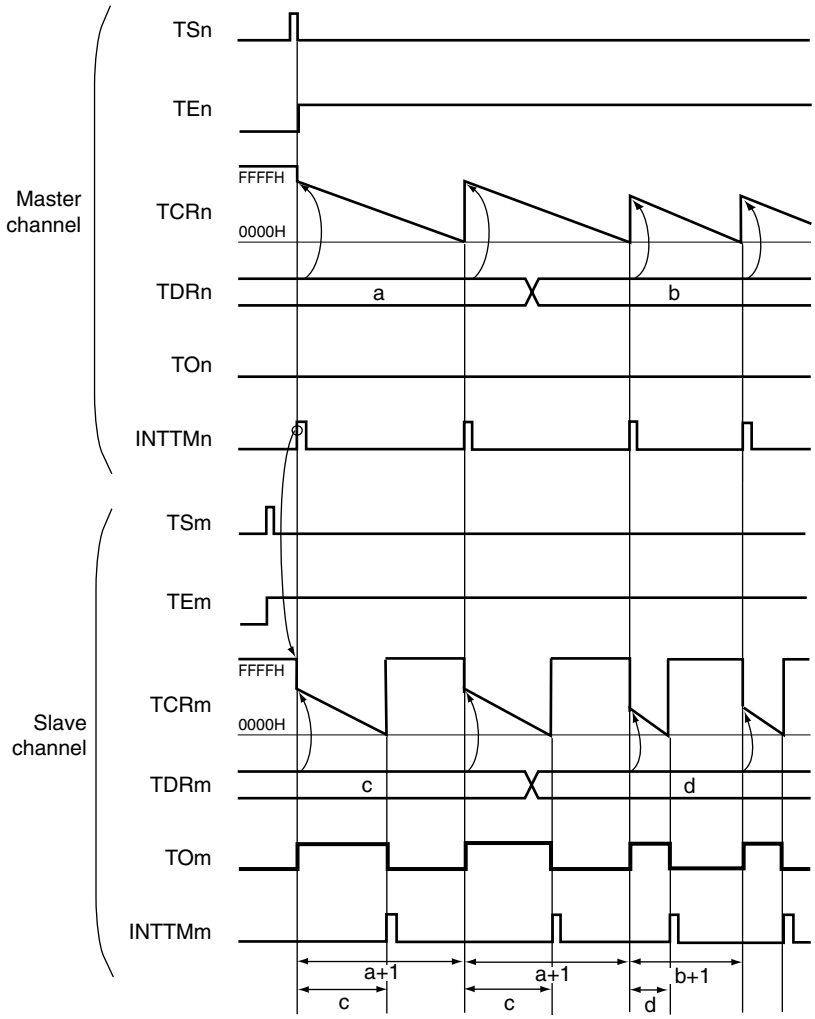

Remarks 1. n = 00, 02, 04, 06, 08, 10 (78K0R/IB3: n = 02, 04, 06 and 10)
m = n + 1

2. TSn, TSm: Bits n, m of timer channel start register 0 (TS0)
TEn, TEm: Bits n, m of timer channel enable status register 0 (TE0)
TCRn, TCRm: Timer counter registers n, m (TCRn, TCRm)
TDRn, TDRm: Timer data registers n, m (TDRn, TDRm)
TOn, TOm: TOn, TOm pins output signal

Figure 6-63. Example of Set Contents of Registers When PWM Function (Master Channel) Is Used

(a) Timer mode register n (TMRn)

	15	14	13	12	11	10	9	8	7	6	5	4	3	2	1	0
TMRn	CKSn		CCS1n	CCS0n	MAS TERn	STSn2	STSn1	STSn0	CISn1	CISn0		MDn4	MDn3	MDn2	MDn1	MDn0
	1/0	0	0	0	1	0	0	0	0	0	0	0	0	0	0	1

Operation mode of channel n
0000B: Interval timer

Setting of operation when counting is started
1: Generates INTTMn when counting is started.

Selection of TIn pin input edge
00B: Sets 00B because these are not used.

Start trigger selection
000B: Selects only software start.

Slave/master selection
1: Master channel

Count clock selection
00B: Selects operation clock.

Operation clock selection
0: Selects CK00 (channels 0 to 7) or CK02 (channels 8 to 11) as operation clock of channel n.
1: Selects CK01 (channels 0 to 7) or CK03 (channels 8 to 11) as operation clock of channel n.

(b) Timer output register 0 (TO0)

	Bit n
TO0	TOn
	0

0: Outputs 0 from TOn.

(c) Timer output enable register 0 (TOE0)

	Bit n
TOE0	TOEn
	0

0: Stops the TOn output operation by counting operation.

(d) Timer output level register 0 (TOL0)

	Bit n
TOL0	TOLn
	0

0: Cleared to 0 when TOMn = 0 (master channel output mode).

(e) Timer output mode register 0 (TOM0)

	Bit n
TOM0	TOMn
	0

0: Sets master channel output mode.

Remark n = 00, 02, 04, 06, 08, 10 (78K0R/IB3: n = 02, 04, 06 and 10)

Figure 6-64. Example of Set Contents of Registers When PWM Function (Slave Channel) Is Used

(a) Timer mode register m (TMRm)

	15	14	13	12	11	10	9	8	7	6	5	4	3	2	1	0
TMRm	CKSm		CCS1m	CCS0m	MAS TERm	STSm2	STSm1	STSm0	CISm1	CISm0		MDm4	MDm3	MDm2	MDm1	MDm0
	1/0	0	0	0	0	1	0	0	0	0	0	0	1	0	0	1

Operation mode of channel m
0100B: One-count mode

Start trigger during operation
1: Trigger input is valid.

Selection of TIm pin input edge
00B: Sets 00B because these are not used.

Start trigger selection
100B: Selects INTTMn of master channel.

Slave/master selection
0: Slave channel

Count clock selection
00B: Selects operation clock.

Operation clock selection
0: Selects CK00 (channels 0 to 7) or CK02 (channels 8 to 11) as operation clock of channel m.
1: Selects CK01 (channels 0 to 7) or CK03 (channels 8 to 11) as operation clock of channel m.
* Make the same setting as master channel.

(b) Timer output register 0 (TO0)

	Bit m	
TO0	TOm 1/0	0: Outputs 0 from TOm. 1: Outputs 1 from TOm.

(c) Timer output enable register 0 (TOE0)

	Bit m	
TOE0	TOEm 1/0	0: Stops the TOm output operation by counting operation. 1: Enables the TOm output operation by counting operation.

(d) Timer output level register 0 (TOL0)

	Bit m	
TOL0	TOLm 1/0	0: Positive logic output (active-high) 1: Inverted output (active-low)

(e) Timer output mode register 0 (TOM0)

	Bit m	
TOM0	TOMm 1	1: Sets slave channel output mode.

Remark n = 00, 02, 04, 06, 08, 10 (78K0R/IB3: n = 02, 04, 06 and 10)
m = n + 1

Figure 6-65. Operation Procedure When PWM Function Is Used (1/2)

	Software Operation	Hardware Status
TAUS default setting		Power-off status (Clock supply is stopped and writing to each register is disabled.)
	Sets the TAU0EN bit of the PER2 register to 1. →	Power-on status. Each channel stops operating. (Clock supply is started and writing to each register is enabled.)
	Sets the TPS0 register. Determines the clock frequencies of CK00 and CK01 for channels 0 to 7, and those of CK02 and CK03 for channels 8 to 11.	
Channel default setting	Sets the TMRn and TMRm registers of two channels to be used (determines operation mode of channels). An interval (period) value is set to the TDRn register of the master channel, and a duty factor is set to the TDRm register of the slave channel.	Channel stops operating. (Clock is supplied and some power is consumed.)
	Sets slave channel. The TOMm bit of the TOM0 register is set to 1 (slave channel output mode). Sets the TOLm bit. Sets the TOm bit and determines default level of the TOm output. →	The TOm pin goes into Hi-Z output state. The TOm default setting level is output when the port mode register is in output mode and the port register is 0.
	Sets TOEm to 1 and enables operation of TOm. →	TOm does not change because channel stops operating.
	Clears the port register and port mode register to 0. →	The TOm pin outputs the TOm set level.

Remark n = 00, 02, 04, 06, 08, 10 (78K0R/IB3: n = 02, 04, 06 and 10)
m = n + 1

Figure 6-65. Operation Procedure When PWM Function Is Used (2/2)

Operation is resumed.

	Software Operation	Hardware Status
Operation start	Sets TOEm (slave) to 1 (only when operation is resumed). The TSn (master) and TSm (slave) bits of the TS0 register are set to 1 at the same time. →	TEn = 1, TEm = 1 When the master channel starts counting, INTTMn is generated. Triggered by this interrupt, the slave channel also starts counting.
During operation	Set values of the TMRn and TMRm registers, TOMn, TOMm, TOLn, and TOLm bits cannot be changed. Set values of the TDRn and TDRm registers can be changed after INTTMn of the master channel is generated. The TCRn and TCRm registers can always be read. The TSRn and TSRm registers are not used. Set values of the TO0 and TOE0 registers can be changed.	The counter of the master channel loads the TDRn value to TCRn, and counts down. When the count value reaches TCRn = 0000H, INTTMn output is generated. At the same time, the value of the TDRn register is loaded to TCRn, and the counter starts counting down again. At the slave channel, the value of TDRm is loaded to TCRm, triggered by INTTMn of the master channel, and the counter starts counting down. The output level of TOm becomes active one count clock after generation of the INTTMn output from the master channel. It becomes inactive when TCRm = 0000H, and the counting operation is stopped. After that, the above operation is repeated.
Operation stop	The TTn (master) and TTm (slave) bits are set to 1 at the same time. →	TEn, TEm = 0, and count operation stops. TCRn and TCRm hold count value and stops. The TOm output is not initialized but holds current status.
	TOEm of slave channel is cleared to 0 and value is set to the TOm bit. →	The TOm pin outputs the TOm set level.
TAUS stop	To hold the TOm pin output level Clears TOm bit to 0 after the value to be held is set to the port register. →	The TOm pin output level is held by port function.
	When holding the TOm pin output level is not necessary Switches the port mode register to input mode. →	The TOm pin output level goes into Hi-Z output state.
	The TAU0EN bit of the PER2 register is cleared to 0. →	Power-off status All circuits are initialized and SFR of each channel is also initialized. (The TOm bit is cleared to 0 and the TOm pin is set to port mode.)

Remark n = 00, 02, 04, 06, 08, 10 (78K0R/IB3: n = 02, 04, 06 and 10)
m = n + 1

6.8.3 Operation as multiple PWM output function

By extending the PWM function and using multiple slave channels, many PWM waveforms with different duty values can be output.

For example, when using two slave channels, the period and duty factor of an output pulse can be calculated by the following expressions.

Pulse period = {Set value of TDRn (master) + 1} × Count clock period
Duty factor 1 [%] = {Set value of TDRp (slave 1)}/{Set value of TDRn (master) + 1} × 100
Duty factor 2 [%] = {Set value of TDRq (slave 2)}/{Set value of TDRn (master) + 1} × 100

Remark Although the duty factor exceeds 100% if the set value of TDRp (slave 1) > {set value of TDRn (master) + 1} or if the {set value of TDRq (slave 2)} > {set value of TDRn (master) + 1}, it is summarized into 100% output.

TCRn of the master channel operates in the interval timer mode and counts the periods.

TCRp of the slave channel 1 operates in one-count mode, counts the duty factor, and outputs a PWM waveform from the TOp pin. TCRp loads the value of TDRp, using INTTMn of the master channel as a start trigger, and starts counting down. When TCRp = 0000H, TCRp outputs INTTMp and stops counting until the next start trigger (INTTMn of the master channel) has been input. The output level of TOp becomes active one count clock after generation of INTTMn from the master channel, and inactive when TCRp = 0000H.

In the same way as TCRp of the slave channel 1, TCRq of the slave channel 2 operates in one-count mode, counts the duty factor, and outputs a PWM waveform from the TOq pin. TCRq loads the value of TDRq, using INTTMn of the master channel as a start trigger, and starts counting down. When TCRq = 0000H, TCRq outputs INTTMq and stops counting until the next start trigger (INTTMn of the master channel) has been input. The output level of TOq becomes active one count clock after generation of INTTMn from the master channel, and inactive when TCRq = 0000H.

When channel 0 is used as the master channel as above, up to eleven types of PWM signals can be output at the same time.

Caution To rewrite both TDRn of the master channel and TDRp of the slave channel 1, write access is necessary at least twice. Since the values of TDRn and TDRp are loaded to TCRn and TCRp after INTTMn is generated from the master channel, if rewriting is performed separately before and after generation of INTTMn from the master channel, the TOp pin cannot output the expected waveform. To rewrite both TDRn of the master and TDRp of the slave, be sure to rewrite both the registers immediately after INTTMn is generated from the master channel (This applies also to TDRq of the slave channel 2).

Remark n = 00, 02, 04, 06, 08, 10
$n < p < q \leq 11$
However, p and q are consecutive integers.

Figure 6-66. Block Diagram of Operation as Multiple PWM Output Function (Output Two Types of PWMs)

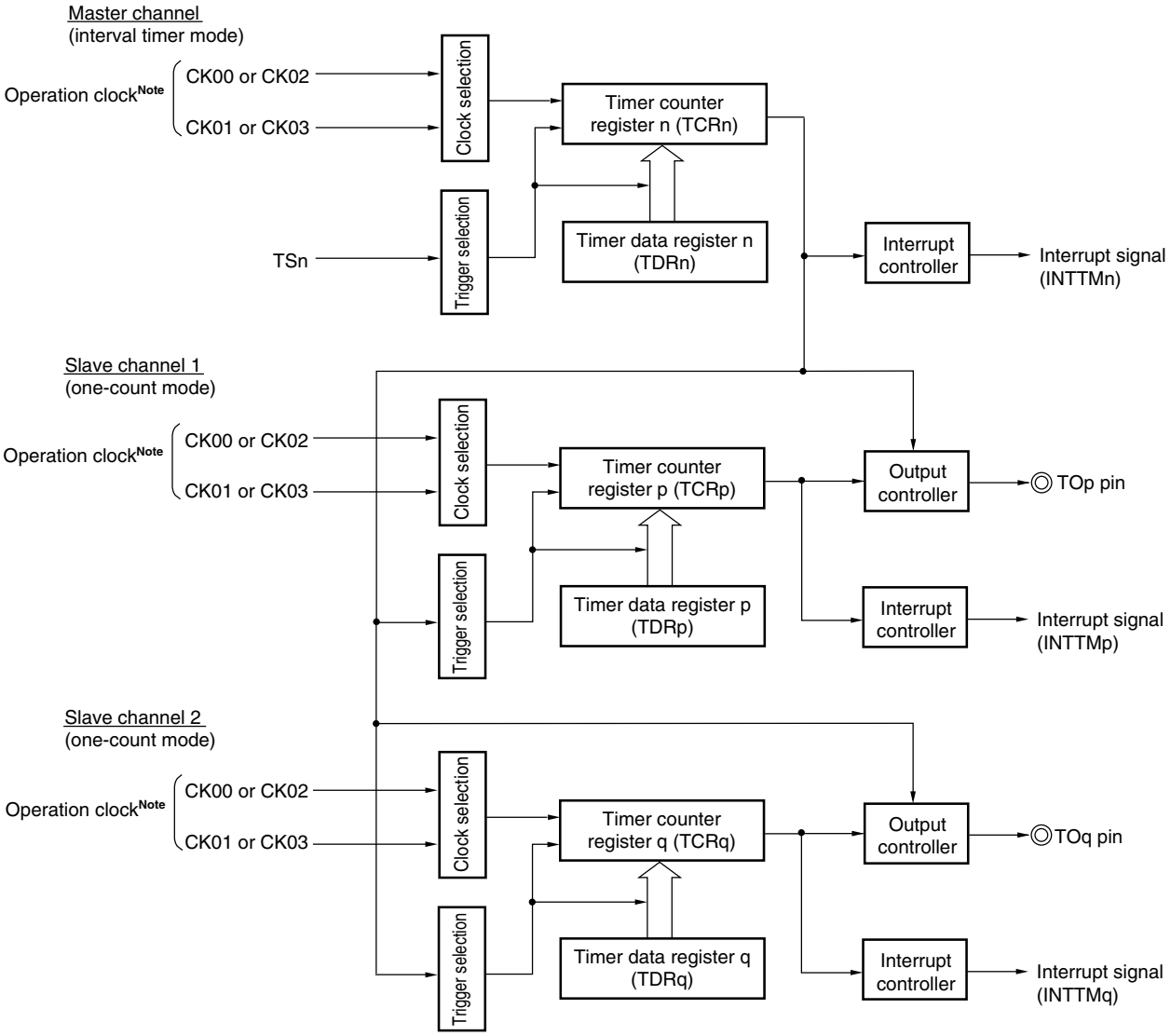

Note The operation clocks of channels 0 to 7 are selected from CK00 and CK01, and those of channels 8 to 11 from CK02 and CK03.

Remarks 1. n = 00, 02, 04, 06, 08, 10

$n < p < q \leq 11$

However, p and q are consecutive integers.

Figure 6-67. Example of Basic Timing of Operation as Multiple PWM Output Function (Output Two Types of PWMs) (Default setting : TOp, TOq = 0)

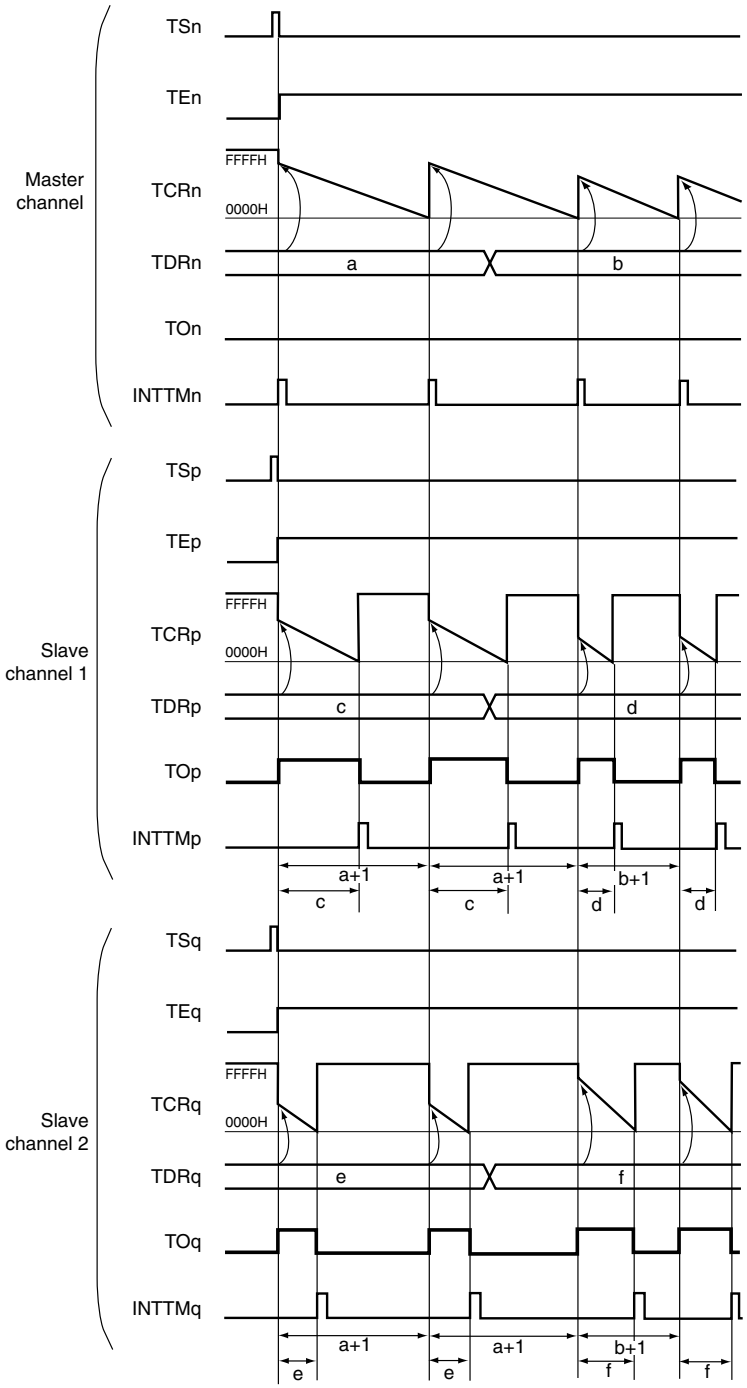

Remarks 1. n = 00, 02, 04, 06, 08, 10

$n < p < q \leq 11$

However, p and q are consecutive integers.

2. TSn, TSp, TSq: Bits n, p, q of timer channel start register 0 (TS0)

TEn, TEp, TEq: Bits n, p, q of timer channel enable status register 0 (TE0)

TCRn, TCRp, TCRq: Timer counter registers n, p, q (TCRn, TCRp, TCRq)

TDRn, TDRp, TDRq: Timer data registers n, p, q (TDRn, TDRp, TDRq)

TOn, TOp, TOq: TOn, TOp, and TOq pins output signal

Figure 6-68. Example of Set Contents of Registers When Multiple PWM Output Function (Master Channel) Is Used

(a) Timer mode register n (TMRn)

	15	14	13	12	11	10	9	8	7	6	5	4	3	2	1	0
TMRn	CKSn		CCS1n	CCS0n	MAS TERn	STSn2	STSn1	STSn0	CISn1	CISn0		MDn4	MDn3	MDn2	MDn1	MDn0
	1/0	0	0	0	1	0	0	0	0	0	0	0	0	0	0	1

Operation mode of channel n
0000B: Interval timer

Setting of operation when counting is started
1: Generates INTTMn when counting is started.

Selection of TIn pin input edge
00B: Sets 00B because these are not used.

Start trigger selection
000B: Selects only software start.

Slave/master selection
1: Master channel

Count clock selection
00B: Selects operation clock.

Operation clock selection
0: Selects CK00 (channels 0 to 7) or CK02 (channels 8 to 11) as operation clock of channel n.
1: Selects CK01 (channels 0 to 7) or CK03 (channels 8 to 11) as operation clock of channel n.

(b) Timer output register 0 (TO0)

	Bit n
TO0	TOn
	0

0: Outputs 0 from TOn.

(c) Timer output enable register 0 (TOE0)

	Bit n
TOE0	TOEn
	0

0: Stops the TOn output operation by counting operation.

(d) Timer output level register 0 (TOL0)

	Bit n
TOL0	TOLn
	0

0: Cleared to 0 when TOMn = 0 (master channel output mode).

(e) Timer output mode register 0 (TOM0)

	Bit n
TOM0	TOMn
	0

0: Sets master channel output mode.

Remark n = 00, 02, 04, 06, 08, 10

Figure 6-69. Example of Set Contents of Registers When Multiple PWM Output Function (Slave Channel) Is Used (Output Two Types of PWMs)

(a) Timer mode register p, q (TMRp, TMRq)

	15	14	13	12	11	10	9	8	7	6	5	4	3	2	1	0
TMRp	CKSp		CCS1p	CCS0p	MAS TERp	STSp2	STSp1	STSp0	CISp1	CISp0		MDp4	MDp3	MDp2	MDp1	MDp0
	1/0	0	0	0	0	1	0	0	0	0	0	0	1	0	0	1
TMRq	CKSq		CCS1q	CCS0q	MAS TERq	STSq2	STSq1	STSq0	CISq1	CISq0		MDq4	MDq3	MDq2	MDq1	MDq0
	1/0	0	0	0	0	1	0	0	0	0	0	0	1	0	0	1

Operation mode of channel p, q
0100B: One-count mode

Start trigger during operation
1: Trigger input is valid.

Selection of TIp and TIq pin input edge
00B: Sets 00B because these are not used.

Start trigger selection
100B: Selects INTTMn of master channel.

Slave/master selection
0: Slave channel

Count clock selection
00B: Selects operation clock.

Operation clock selection
0: Selects CK00 (channels 0 to 7) or CK02 (channels 8 to 11) as operation clock of channels p and q.
1: Selects CK01 (channels 0 to 7) or CK03 (channels 8 to 11) as operation clock of channels p and q.
* Make the same setting as master channel.

(b) Timer output register 0 (TO0)

	Bit q	Bit p
TO0	TOq	TOp
	1/0	1/0

0: Outputs 0 from TOp or TOq.
1: Outputs 1 from TOp or TOq.

(c) Timer output enable register 0 (TOE0)

	Bit q	Bit p
TOE0	TOEq	TOEp
	1/0	1/0

0: Stops the TOp or TOq output operation by counting operation.
1: Enables the TOp or TOq output operation by counting operation.

(d) Timer output level register 0 (TOL0)

	Bit q	Bit p
TOL0	TOLq	TOLp
	1/0	1/0

0: Positive logic output (active-high)
1: Inverted output (active-low)

(e) Timer output mode register 0 (TOM0)

	Bit q	Bit p
TOM0	TOMq	TOMp
	1	1

1: Sets slave channel output mode.

Remark n = 00, 02, 04, 06, 08, 10 $n < p < q \leq 11$ (However, p and q are consecutive integers.)

Figure 6-70. Operation Procedure When Multiple PWM Output Function Is Used (Output Two Types of PWMs) (1/2)

	Software Operation	Hardware Status
TAUS default setting		Power-off status (Clock supply is stopped and writing to each register is disabled.)
	Sets the TAU0EN bit of the PER2 register to 1. →	Power-on status. Each channel stops operating. (Clock supply is started and writing to each register is enabled.)
	Sets the TPS0 register. Determines the clock frequencies of CK00 and CK01 for channels 0 to 7, and those of CK02 and CK03 for channels 8 to 11.	
Channel default setting	Sets the TMRn, TMRp, and TMRq registers of each channel to be used (determines operation mode of channels). An interval (period) value is set to the TDRn register of the master channel, and a duty factor is set to the TDRp and TDRq registers of the slave channel.	Channel stops operating. (Clock is supplied and some power is consumed.)
	Sets slave channel. The TOMp and TOMq bits of the TOM0 register is set to 1 (slave channel output mode). Clears the TOLp and TOLq bits to 0. Sets the TOp and TOq bits and determines default level of the TOp and TOq outputs. →	The TOp and TOq pins go into Hi-Z output state. The TOp and TOq default setting levels are output when the port mode register is in output mode and the port register is 0.
	Sets TOEp or TOEq to 1 and enables operation of TOp or TOq. →	TOp or TOq does not change because channel stops operating.
	Clears the port register and port mode register to 0. →	The TOp and TOq pins output the TOp and TOq set levels.

Remark n = 00, 02, 04, 06, 08, 10

$n < p < q \leq 11$

However, p and q are consecutive integers.

Figure 6-70. Operation Procedure When Multiple PWM Output Function Is Used (Output Two Types of PWMs (2/2))

Operation is resumed.

	Software Operation	Hardware Status
Operation start	(Sets the TOEp and TOEq (slave) bits to 1 only when resuming operation.) Sets TOEp and TOEq (slave) bits to 1 (only when operation is resumed). The TSn (master), TSp, and TSq (slave) bits of the TS0 register are set to 1 at the same time. The TSn, TSp, and TSq bits automatically return to 0 because they are trigger bits.	TEn = 1, TEp, TEq = 1 When the master channel starts counting, INTTMn is generated. Triggered by this interrupt, the slave channel also starts counting.
During operation	Set values of the TMRn, TMRp, TMRq registers, TOMn, TOMp, TOMq, TOLn, TOLp, and TOLq bits cannot be changed. Set values of the TDRn, TDRp, and TDRq registers can be changed after INTTMn of the master channel is generated. The TCRn, TCRp, and TCRq registers can always be read. The TSRn, TSRp, and TSRq registers are not used. Set values of the TO0 and TOE0 registers can be changed.	The counter of the master channel loads the TDRn value to TCRn and counts down. When the count value reaches TCRn = 0000H, INTTMn is generated. At the same time, the value of the TDRn register is loaded to TCRn, and the counter starts counting down again. At the slave channel 1, the values of TDRp are transferred to TCRp, triggered by INTTMn of the master channel, and the counter starts counting down. The output levels of TOp become active one count clock after generation of the INTTMn output from the master channel. It becomes inactive when TCRp = 0000H, and the counting operation is stopped. At the slave channel 2, the values of TDRq are transferred to TCRq, triggered by INTTMn of the master channel, and the counter starts counting down. The output levels of TOq become active one count clock after generation of the INTTMn output from the master channel. It becomes inactive when TCRq = 0000H, and the counting operation is stopped. After that, the above operation is repeated.
Operation stop	The TTn bit (master), TTp, and TTq (slave) bits are set to 1 at the same time. The TTn, TTp, and TTq bits automatically return to 0 because they are trigger bits.	TEn, TEp, TEq = 0, and count operation stops. TCRn, TCRp, and TCRq hold count value and stops. The TOp and TOq output is not initialized but holds current status.
	TOEp or TOEq of slave channel is cleared to 0 and value is set to the TOp and TOq bits.	The TOp and TOq pins output the TOp and TOq set levels.
TAUS stop	To hold the TOp and TOq pin output levels Clears TOp and TOq bits to 0 after the value to be held is set to the port register.	The TOp and TOq pin output levels are held by port function.
	When holding the TOp and TOq pin output levels is not necessary Switches the port mode register to input mode.	The TOp and TOq pin output levels go into Hi-Z output state.
	The TAU0EN bit of the PER2 register is cleared to 0.	Power-off status All circuits are initialized and SFR of each channel is also initialized. (The TOp and TOq bits are cleared to 0 and the TOp and TOq pins are set to port mode.)

Remark n = 00, 02, 04, 06, 08, 10

$n < p < q \leq 11$

However, p and q are consecutive integers.

CHAPTER 7 INVERTER CONTROL FUNCTIONS

7.1 Outline of Functions

The 78K0R/IE3 can be used as an inverter control function and for motor control by using timer array unit TAUS (hereinafter referred to as “TAUS”) and the TAUS option unit. It can be used with an operation clock having a 40 MHz maximum resolution (when the internal high-speed oscillation clock is used). Furthermore, the A/D converter start timing can be generated.

The following operations can be performed by using the inverter control function.

(1) Complementary PWM output function

- 6-phase PWM output function (triangular wave modulation, upper arm, lower arm, six outputs)
  A waveform of an arbitrary period, the duty, and the dead time can be generated by using channel 7 of the TAUS in combination.
  → refer to **7.5.6 Operation as 6-phase triangular wave PWM output function**

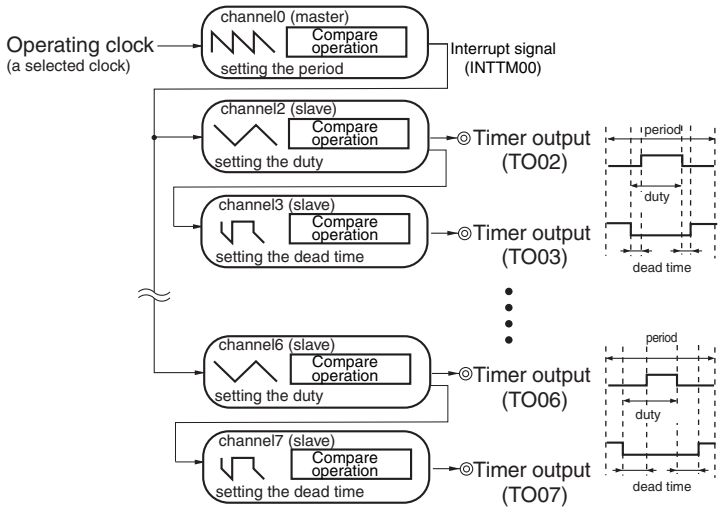

- Half-bridge output function (two outputs × 2)
  A waveform of an arbitrary period, the duty, and the dead time can be generated by using channel 3 of the TAUS in combination.
  → refer to **7.5.5 Operation as triangular wave PWM output function with dead time**

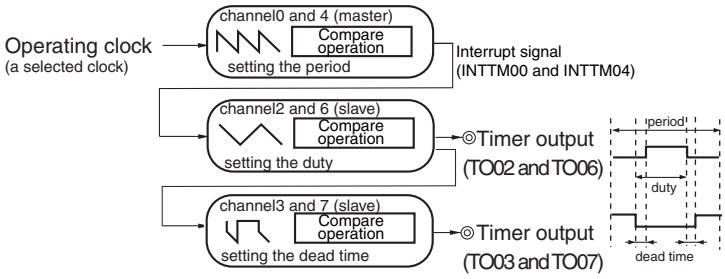

- Full-bridge output function (four outputs)
  This function uses the above-mentioned half-bridge output.

(2) Non-complementary PWM output function

- 6-phase PWM output function (sawtooth wave modulation or triangular wave modulation, six outputs)

  A waveform of an arbitrary frequency, the duty, and one without dead time can be generated by using channel 7 of the TAUS in combination.

  → refer to **7.5.3 Operation as 6-phase PWM output function**

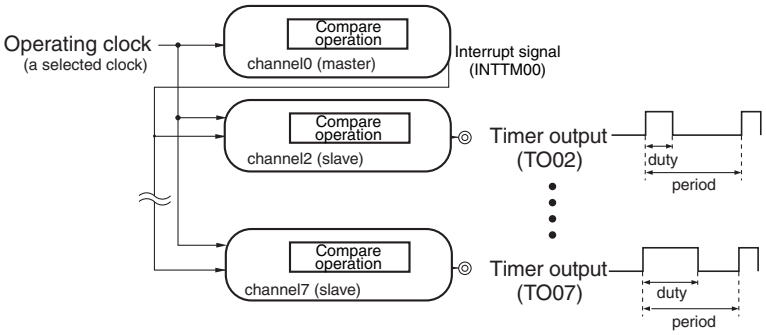

(3) Interrupt-thinning function

The interrupts of channels 0 and 4 that are used for setting the period can be thinned.

→ refer to **7.5.7 Interrupt signal thinning function**

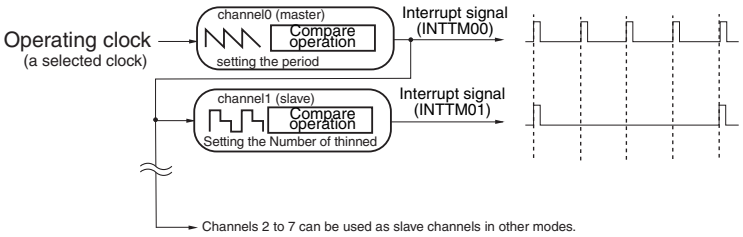

(4) Arbitrary dead time setting function

An arbitrary dead time can be set.

(5) A/D converter start timing setting function (Four types of timings can be generated.)

The A/D converter start timing can be output by using channels 8 and 9 of the TAUS.

→ refer to **7.5.8 Operation as A/D conversion trigger output function (type 1)**

→ refer to **7.5.9 Operation as A/D conversion trigger output function (type 2)**

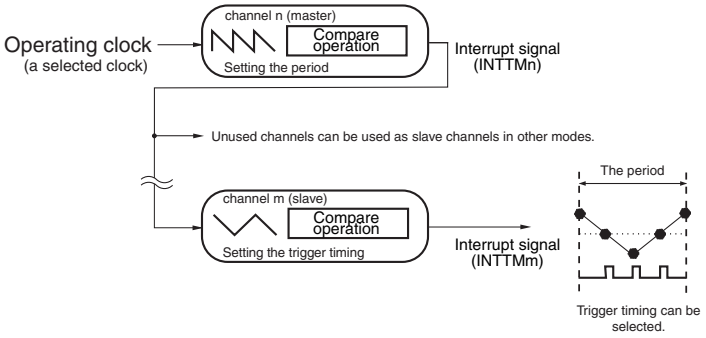

(6) 0% and 100% output can be performed.
0% and 100% outputs can be performed both with the complementary PWM output function and non-complementary PWM output function.

(7) Forward and reverse settings of the timer output can be performed for each pin.

(8) Real-time output function (PWM modulation can be performed with this function)
→ refer to **7.5.13 Operation as non-complementary modulation output function (type 1)**
→ refer to **7.5.14 Operation as non-complementary modulation output function (type 2)**
→ refer to **7.4.15 Operation as complementary modulation output function**

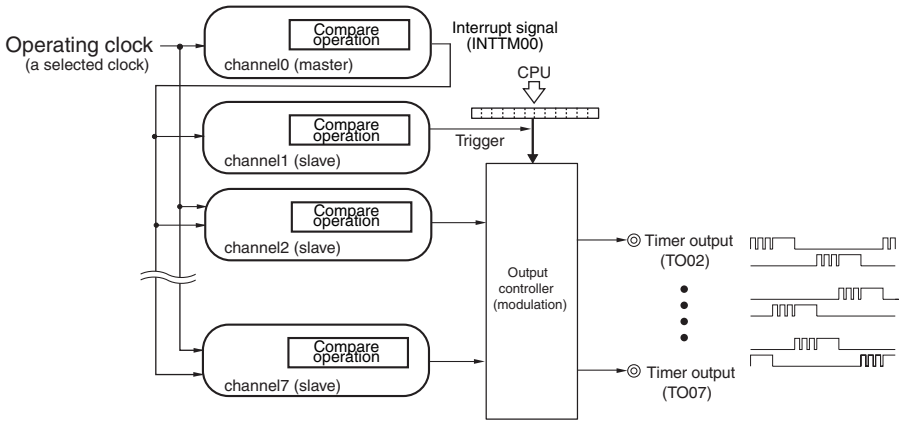

(9) Forcible output stop function
The outputs of TO02 to TO07 can be set to high impedance during detection of the valid edge by the internal comparator.
The outputs of TO02 to TO07 can be set to high impedance during detection of the valid edge by an external pin input (TMOFF0, TMOFF1).
→ refer to **7.6 Overvoltage Detection Function**

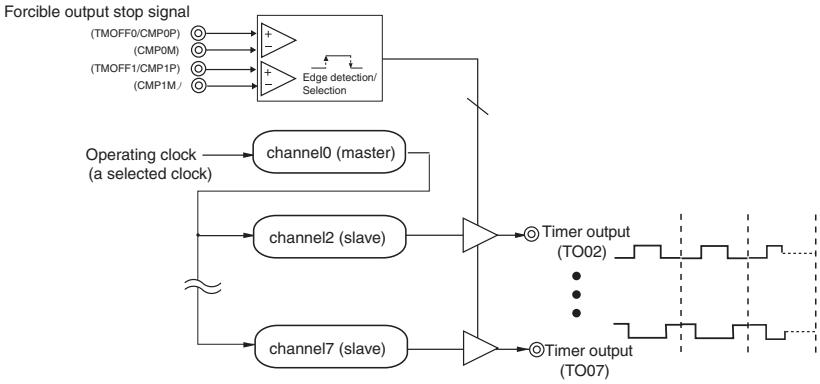

Caution There is no TMOFF1 pin in the 78K0R/IB3. Consequently, high impedance can only be controlled by using the TMOFF0 pin.

7.2 Configuration of Inverter Control Function

The inverter function can be achieved by adding functions to timer array unit TAUS.

The hardware configuration of timer array unit TAUS and the inverter control function block is shown below.

Table 7-1. Configuration of Timer Array Unit TAUS and Inverter Control Function Block

Item	Configuration
Timer/counter	Timer counter register n (TCRn)[Note 1]
Register	Timer data register n (TDRn)[Note 1]
Timer input	TI00, TI02 to TI11, SLTI pins[Note 2], RxD0 pin (for LIN-bus)
Timer output	TO00, TO02 to TO11, SLTO pins[Note 2], output controller
Control registers	<Registers of unit setting block> • Peripheral enable register 2 (PER2)[Note 1] • Timer clock select register 0 (TPS0)[Note 1] • Timer channel enable status register 0 (TE0)[Note 1] • Timer channel start register 0 (TS0)[Note 1] • Timer channel stop register 0 (TT0)[Note 1] • Timer input select register 0 (TIS0)[Notes1, 3] • Timer output enable register 0 (TOE0)[Note 1] • Timer output register 0 (TO0)[Note 1] • Timer output level register 0 (TOL0)[Note 1] • Timer output mode register 0 (TOM0)[Note 1] • Timer triangle wave output mode register 0 (TOT0) • Timer dead time output enable register 0 (TDE0) • Timer real-time output register 0 (TRO0) • Timer real-time output enable register 0 (TRE0) • Timer real-time control register 0 (TRC0) • Timer modulation output enable register 0 (TME0) • TAU option mode register (OPMR) • TAU option status register (OPSR) • TAU option Hi-Z start trigger register (OPHS) • TAU option Hi-Z stop trigger register (OPHT) • TAU option control register (OPCR)
	<Registers of each channel> • Timer mode register n (TMRn)[Note 1] • Timer status register n (TSRn)[Note 1] • Input switch control register (ISC)[Note 1] Used when the LIN-bus is supported • Noise filter enable registers 1, 2 (NFEN1, NFEN2)[Note 1] • Port mode registers 0, 1, 3, 5, 7 (PM0, PM1, PM3, PM5, PM7)[Notes 1, 4] • Port registers 0, 1, 3, 5, 7 (P0, P1, P3, P5, P7)[Notes 1, 4]

Notes 1. The inverter control function can be achieved by adding option functions to timer array unit TAUS. In this chapter, only the registers to be used with the inverter control function are described. For other registers that are to be used in common with timer array unit TAUS, refer to **CHAPTER 6 TIMER ARRAY UNIT TAUS**.

2. The presence or absence of timer I/O pins of Chaneel0, 1 and 8 to 11 in each timer array unit channel depends on the product. see **Table 6-1 Timer I/O Pins provided in Each Product for details**.

3. This is not provided in the 78K0R/IB3.

4. The PM0 and P0 registers are only provided in the 78K0R/ID3 and 78K0R/IE3. The PM7 and P7 registers are not provided in the 78K0R/IB3.

Remark n: Channel number (n = 00 to 11)

Figure 7-1 shows a block diagram.

Figure 7-1. Entire Configuration of Timer Array Unit TAUS and Inverter Control Function Block (Example: 78K0R/IE3)

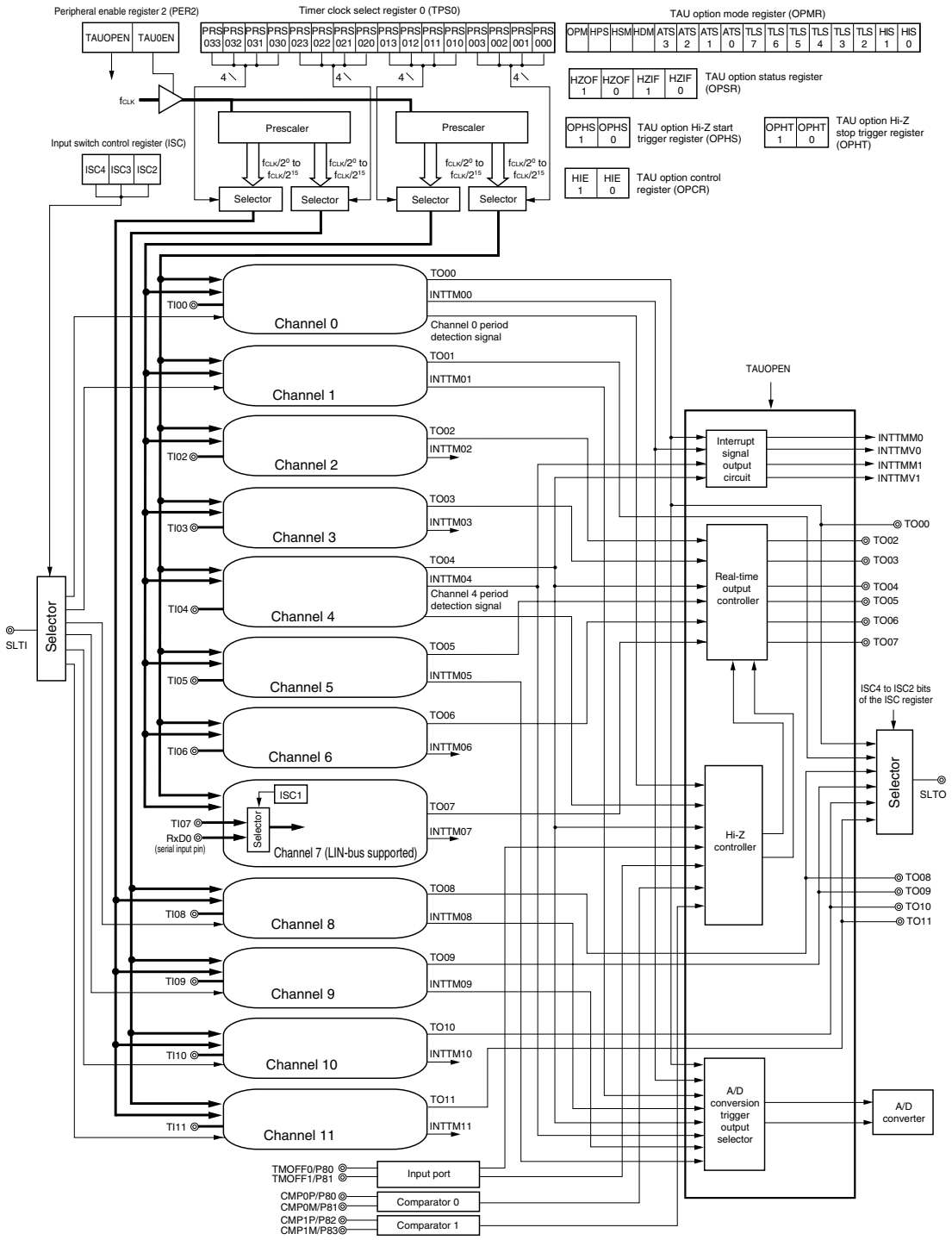

Remark The configuration diagram in Figure 7-1 includes the registers and pins that are to be used in common with timer array unit TAUS. For details of timer array unit TAUS, refer to **CHAPTER 6 TIMER ARRAY UNIT TAUS**.

Figure 7-2. Block Diagram of Each Channel (Example: Channel 4 of 78K0R/IE3)

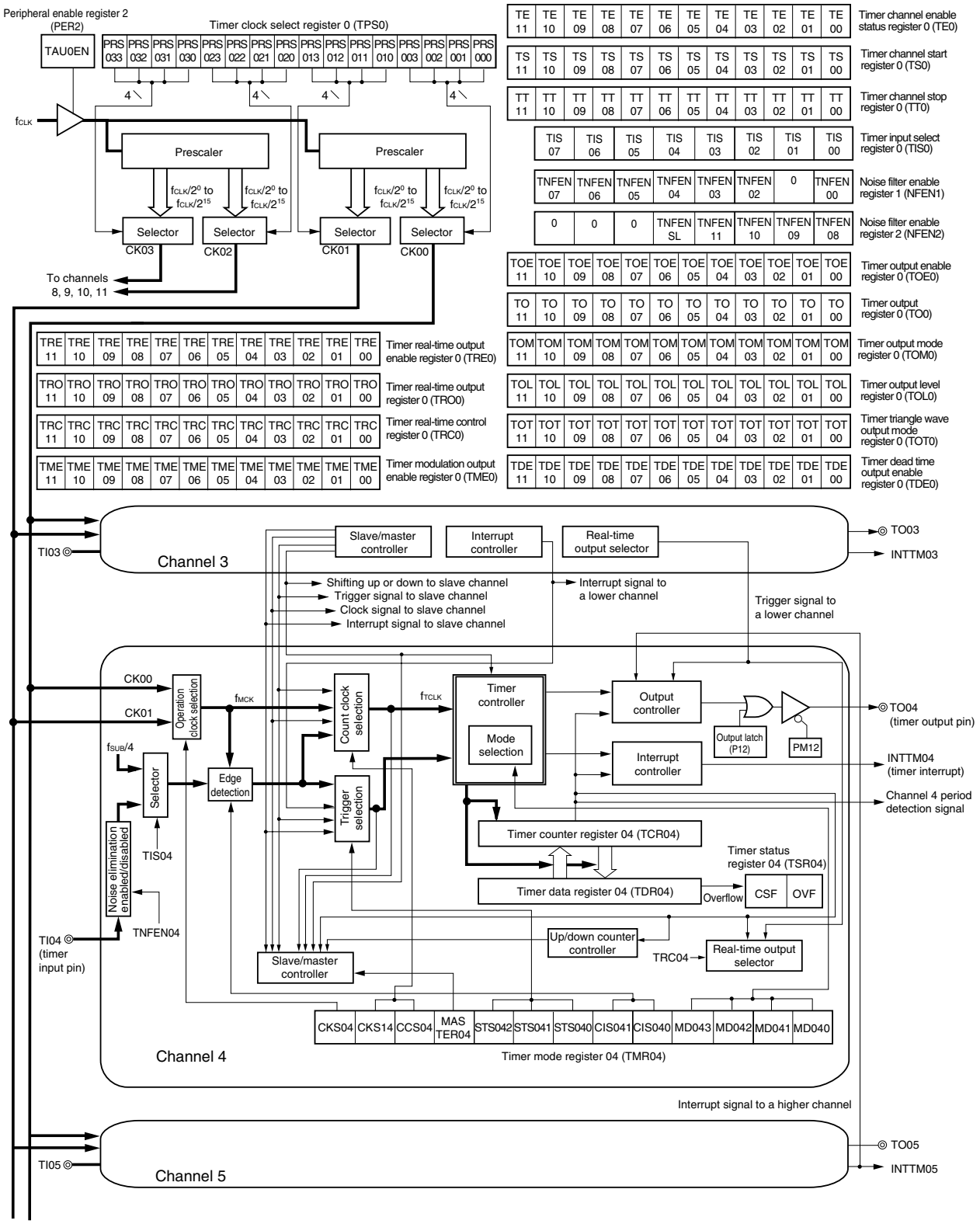

Remark The block diagram in Figure 7-2 includes the registers and pins that are to be used in common with timer array unit TAUS. For details of timer array unit TAUS, refer to **CHAPTER 6 TIMER ARRAY UNIT TAUS**.

(1) Timer counter register n (TCRn)

(2) Timer data register n (TDRn)

The above-mentioned registers are used in common with timer array unit TAUS.
For details, refer to **6.2 Configuration of Timer Array Unit TAUS**.

7.3 Registers Controlling Timer Array Unit TAUS and Inverter Control Function Block

The following registers control timer array unit TAUS and the inverter control function block.

- Peripheral enable register 2 (PER2)
- Timer clock select register 0 (TPS0)[Note 1]
- Timer mode register n (TMRn)[Note 1]
- Timer status register n (TSRn)[Note 1]
- Timer channel enable status register 0 (TE0)[Note 1]
- Timer channel start register 0 (TS0)[Note 1]
- Timer channel stop register 0 (TT0)[Note 1]
- Timer input select register 0 (TIS0) [Notes 1, 2]
- Timer output enable register 0 (TOE0)[Note 1]
- Timer output register 0 (TO0)[Note 1]
- Timer output level register 0 (TOL0)[Note 1]
- Timer output mode register 0 (TOM0)[Note 1]
- Timer triangle wave output mode register 0 (TOT0)
- Timer dead time output enable register 0 (TDE0)
- Timer real-time output register 0 (TRO0)
- Timer real-time output enable register 0 (TRE0)
- Timer real-time control register 0 (TRC0)
- Timer modulation output enable register 0 (TME0)
- TAU option mode register (OPMR)
- TAU option status register (OPSR)
- TAU option Hi-Z start trigger register (OPHS)
- TAU option Hi-Z stop trigger register (OPHT)
- TAU option control register (OPCR)
- Input switch control register (ISC)[Note 1]
- Noise filter enable registers 1, 2 (NFEN1, NFEN2)[Note 1]
- Port mode registers 0, 1, 3, 5, 7 (PM0, PM1, PM3, PM5, PM7)[Notes 1, 3]
- Port registers 0, 1, 3, 5, 7 (P0, P1, P3, P5, P7)[Notes1, 3]

Notes 1. The inverter control function can be achieved by adding option functions to timer array unit TAUS. In this chapter, only the registers to be used with the inverter control function are described. For other registers that are to be used in common with timer array unit TAUS, refer to **CHAPTER 6 TIMER ARRAY UNIT TAUS**.

2. This is not provided in the 78K0R/IB3.

3. The PM0 and P0 registers are only provided in the 78K0R/ID3 and 78K0R/IE3. The PM7 and P7 registers are not provided in the 78K0R/IB3.

Remark n = 00 to 11

(1) Peripheral enable register 2 (PER2)

PER2 is used to enable or disable supplying the clock to the peripheral hardware. Clock supply to a hardware macro that is not used is stopped in order to reduce the power consumption and noise.

When using timer array unit TAUS and the inverter control function, be sure to set bit 0 (TAU0EN) and bit 1 (TAUOPEN) of this register to 1.

PER2 can be set by a 1-bit or 8-bit memory manipulation instruction.

Reset signal generation clears PER2 to 00H.

Figure 7-3. Format of Peripheral Enable Register 2 (PER2)

Address: F00F2H After reset: 00H R/W

Symbol	7	6	5	4	3	2	<1>	<0>
PER2	0	0	0	0	0	0	TAUOPEN	TAU0EN

TAU0EN	Control of timer array unit TAUS input clock
0	Stops input clock supply. • SFR used by timer array unit TAUS cannot be written. • Timer array unit TAUS is in the reset status.
1	Enables input clock supply. • SFR used by timer array unit TAUS can be read/written.

TAUOPEN	Control of inverter control block input clock
0	Stops input clock supply. • SFR used by the inverter control block cannot be written. • The inverter control block is in the reset status.
1	Enables input clock supply. • SFR used by the inverter control block can be read/written.

Cautions 1. When setting timer array unit TAUS and the inverter control function, be sure to set TAU0EN and TAUOPEN to 1 first. If TAU0EN and TAUOPEN = 0, writing to a control register of timer array unit TAUS and the inverter control function is ignored, and all read values are default values (except for timer input select register 0 (TIS0), input switch control register (ISC), noise filter enable registers 1, 2 (NFEN1, NFEN2), port mode registers 0, 1, 3, 5, 7(PM0, PM1, PM3, PM5, PM7), port registers 0, 1, 3, 5, 7 (P0, P1, P3, P5, P7)).

2. Be sure to clear bits 2 to 7 of the PER2 register to 0.

(2) Timer clock select register 0 (TPS0)

(3) Timer mode register n (TMRn)

(4) Timer status register n (TSRn)

(5) Timer channel enable status register 0 (TE0)

(6) Timer channel start register 0 (TS0)

(7) Timer channel stop register 0 (TT0)

(8) Timer input select register 0 (TIS0)

(9) Timer output enable register 0 (TOE0)

(10) Timer output register 0 (TO0)

(11) Timer output level register 0 (TOL0)

(12) Timer output mode register 0 (TOM0)

The above-mentioned registers (2) to (12) are used in common with timer array unit TAUS.
For details, refer to **6.3 Registers Controlling Timer Array Unit TAUS**.

(13) Timer triangle wave output mode register 0 (TOT0)

TOT0 controls the timer output mode of the slave channel that is set by setting TOMm of the TOM0 register to 1.

The setting of each channel m specified by using this register is applied when TREm and TMEm are set to 0 or TREm and TMEm are set to 1, when timer output is enabled (TOEm = 1) and TOMm is set to 1.

TOT0 can be rewritten when timer operation is stopped (TEm = 0).

TOT0 can be set by a 16-bit memory manipulation instruction.

Reset signal generation clears this register to 0000H.

Figure 7-4. Format of Timer Triangle Wave Output Mode Register 0 (TOT0)

Address: F01E8H, F01E9H After reset: 0000H R/W

Symbol	15	14	13	12	11	10	9	8	7	6	5	4	3	2	1	0
TOT0	0	0	0	0	TOT 11	TOT 10	TOT 09	TOT 08	TOT 07	TOT 06	TOT 05	TOT 04	TOT 03	TOT 02	TOT 01	TOT 00

TOT m	Selection of slave channel output mode of channel m
0	Sets by a master channel timer interrupt request signal (INTTMn) and resets by a slave channel timer interrupt request signal (INTTMm).
1	Sets by a timer interrupt request signal during a down status (INTTMm) and resets by a timer interrupt request signal during an up status (INTTMm)[Note].

Note Set the slave channel to TOTm = 1 when triangle wave PWM has been generated.

Caution Be sure to clear bits 15 to 12 to 0.

Remark n: Master channel number, m: Slave channel number

n = 00, 02, 04, 06, 08

$n < m \leq 11$

(14) Timer real-time output enable register 0 (TRE0)

TRE0 enables or stops the timer output of each channel when the real-time output function is used.
TRE0 can be rewritten when timer operation is stopped (TEn = 0).
TRE0 can be set by a 16-bit memory manipulation instruction.
Reset signal generation clears this register to 0000H.

Figure 7-5. Format of Timer Real-Time Output Enable Register 0 (TRE0)

Address: F01EAH, F01EBH After reset: 0000H R/W

Symbol	15	14	13	12	11	10	9	8	7	6	5	4	3	2	1	0
TRE0	0	0	0	0	TRE 11	TRE 10	TRE 09	TRE 08	TRE 07	TRE 06	TRE 05	TRE 04	TRE 03	TRE 02	TRE 01	TRE 00

TRE n	Real-time output enable/disable of channel n
0	Stops real-time output.
1	Enables real-time output.

Caution Be sure to clear bits 15 to 12 to 0.

Remark n = 00 to 11

(15) Timer real-time output register 0 (TRO0)

TRO0 is a timer output buffer register for the real-time output function. The value of each bit of this register is output from the timer output pin (TOn) of each channel when the real-time output is enabled.
The TRO0 setting does not affect timer operation when the real-time output is stopped (TREn = 0). The TOn pin output is changed by the real-time output and timer operation (trigger generation channel) when the real-time output is enabled (TREn = 1).
TRO0 can be set by a 16-bit memory manipulation instruction.
Reset signal generation clears this register to 0000H.

Figure 7-6. Format of Timer Real-Time Output Register 0 (TRO0)

Address: F01ECH, F01EDH After reset: 0000H R/W

Symbol	15	14	13	12	11	10	9	8	7	6	5	4	3	2	1	0
TRO0	0	0	0	0	TRO 11	TRO 10	TRO 09	TRO 08	TRO 07	TRO 06	TRO 05	TRO 04	TRO 03	TRO 02	TRO 01	TRO 00

TRO n	Real-time output level
0	Low level
1	High level

Caution Be sure to clear bits 15 to 12 to 0.

Remark n = 00 to 11

(16) Timer real-time control register 0 (TRC0)

TRC0 sets the channel generated by the real-time output trigger.

TRC0 can be rewritten when timer operation is stopped (TEn = 0).

TRC0 can be set by a 16-bit memory manipulation instruction.

Reset signal generation clears this register to 0000H.

Figure 7-7. Format of Timer Real-Time Control Register 0 (TRC0)

Address: F01EEH, F01EFH After reset: 0000H R/W

Symbol	15	14	13	12	11	10	9	8	7	6	5	4	3	2	1	0
TRC0	0	0	0	0	TRC 11	TRC 10	TRC 09	TRC 08	TRC 07	TRC 06	TRC 05	TRC 04	TRC 03	TRC 02	TRC 01	TRC 00

TRC n	Selection of real-time output trigger function
0	Does not operate as a real-time output trigger generation channel. The timer interrupt request signal (INTTMn) of the channel that is set to TRCn = 1 at a higher channel becomes the real-time output trigger.
1	Operates as a real-time output trigger generation channel. The timer interrupt request signal (INTTMn) of the channel becomes the real-time output trigger of a lower channel.

Caution Be sure to clear bits 15 to 12 to 0.

Remark n = 00 to 11

(17) Timer dead time output enable register 0 (TDE0)

TDE0 enables or disables dead time control of the timer output of each channel.

The setting of each channel n specified by using this register is applied when timer output is enabled (TOEn = 1), and TOMn and TOTn are set to 1.

TDE0 can be rewritten when timer operation is stopped (TEn = 0).

The TDEn value must be set the same for the even-number channel and odd-number channel for which dead time control is performed, because dead time control is performed for a set of an even-number channel and odd-number channel (even-number channel + 1).

TDE0 can be set by a 16-bit memory manipulation instruction.

Reset signal generation clears this register to 0000H.

Figure 7-8. Format of Timer Dead Time Output Enable Register 0 (TDE0)

Address: F01F2H, F01F3H After reset: 0000H R/W

Symbol	15	14	13	12	11	10	9	8	7	6	5	4	3	2	1	0
TDE0	0	0	0	0	TDE11	TDE10	TDE09	TDE08	TDE07	TDE06	TDE05	TDE04	TDE03	TDE02	TDE01	TDE00

TDEn	Selection of dead time control
0	Disables dead time control.
1	Enables dead time control.

Caution Be sure to clear bits 15 to 12 to 0.

Remark n = 00 to 11

(18) Timer modulation output enable register 0 (TME0)

TME0 enables or disables the operation of the modulated-output function of timer output and real-time output.

TME0 can be set by a 16-bit memory manipulation instruction.

Reset signal generation clears this register to 0000H.

Figure 7-9. Format of Timer Modulation Output Enable Register 0 (TME0)

Address: F01F0H, F01F1H After reset: 0000H R/W

Symbol	15	14	13	12	11	10	9	8	7	6	5	4	3	2	1	0
TME0	0	0	0	0	TME 11	TME 10	TME 09	TME 08	TME 07	TME 06	TME 05	TME 04	TME 03	TME 02	TME 01	TME 00

TME n	Real-time output level
0	Disables modulated output of timer output and real-time output.
1	Enables modulated output of timer output and real-time output.

Caution Be sure to clear bits 15 to 12 to 0.

Remark n = 00 to 11

(19) TAU option mode register (OPMR)

OPMR sets the operation mode of the inverter control function option unit.

OPMR can be rewritten only if HIE1 and HIE0 of the OPCR register are set to 00B and master channels 00 and 04 of TAUS are stopped (TE00 = 0, TE04 = 0).

OPMR can be set by a 16-bit memory manipulation instruction.

Reset signal generation clears this register to 0000H.

Figure 7-10. Format of TAU Option Mode Register (OPMR) (1/2)

Address: F0220H After reset: 0000H R/W

Symbol	15	14	13	12	11	10	9	8	7	6	5	4	3	2	1	0
OPMR	OPM	HPS	HSM	HDM	ATS3	ATS2	ATS1	ATS0	TLS7	TLS6	TLS5	TLS4	TLS3	TLS2	HIS1	HIS0

OPM	Operation mode selection
0	6-phase output control mode (TO02 to TO07 become Hi-Z control targets, and Hi-Z control and cancellation are set by the HDM bit.)
1	Half-bridge output control mode (when channel 0 and channel 4 are the period registers) (TO02 and TO03 are set to Hi-Z by the TMOFF0 pin or internal comparator CMP0. TO06 and TO07 are set to Hi-Z by the TMOFF1 pin or internal comparator CMP1. A Hi-Z state is cancelled by the HSM bit.)

HPS	Hi-Z input pin selection
0	Uses the TMOFF0 and TMOFF1 pins as the Hi-Z control signal.
1	Uses the internal comparator output signal as the Hi-Z control signal.

HSM	Hi-Z cancellation method selection (when OPM = 1)
0	A Hi-Z state can be cancelled in synchronization with the period after the inactive edge of an internal comparator (CMP0/CMP1) or TMOFF0, TMOFF1 is detected.
1	A Hi-Z state can be cancelled in synchronization with the period after the edge by a software write is detected.

HDM	Hi-Z cancellation method selection (when OPM = 0)
0	2-stage overcurrent detection mode (A Hi-Z state is set when the active edge of internal comparator 0 (CMP0 side) or TMOFF0 is detected, and the Hi-Z state is cancelled in synchronization with the period after an inactive edge is detected. Furthermore, a Hi-Z state is set when the active edge of internal comparator 1 (CMP1 side) or TMOFF1 is detected, and the Hi-Z state is cancelled in synchronization with the period after the edge by a software write is detected.)
1	Overcurrent/electromotive force detection mode (A Hi-Z state is set by reversing the internal comparator 0 output or reversing the TMOFF0 active edge detection, and thus detecting the overcurrent side (high-potential CMP1 or TMOFF1) and the electromotive force side (low-potential CMP0 or TMOFF0). The Hi-Z state can be cancelled in synchronization with the period after inactive edge detection of an internal comparator or TMOFF0, TMOFF1.)

Caution There is no TMOFF1 pin in the 78K0R/IB3. Consequently, in the 78K0R/IB3, high impedance cannot be controlled by using the TMOFF1 pin.

Figure 7-10. Format of TAU Option Mode Register (OPMR) (2/2)

Address: F0220H After reset: 0000H R/W

Symbol	15	14	13	12	11	10	9	8	7	6	5	4	3	2	1	0
OPMR	OPM	HPS	HSM	HDM	ATS 3	ATS 2	ATS 1	ATS 0	TLS 7	TLS 6	TLS 5	TLS 4	TLS 3	TLS 2	HIS 1	HIS 0

ATS 3	ATS 2	Timer trigger signal 1 for A/D conversion selection OPM = 0: uses channel 9 for interrupt generation OPM = 1: uses channel 5 for interrupt generation
0	0	Generates an A/D trigger for the match interrupt during a down status period of the master channel.
0	1	Generates an A/D trigger for the match interrupt during an up status period of the master channel.
1	0	Generates an A/D trigger for the match interrupt during an up or a down status period of the master channel
1	1	Generates an A/D trigger for the match interrupt during an up or a down status period of the master channel + valley interrupt of the master channel

ATS 1	ATS 0	Timer trigger signal 0 for A/D conversion selection OPM = 0: uses channel 8 for interrupt generation OPM = 1: uses channel 1 for interrupt generation
0	0	Generates an A/D trigger for the match interrupt during a down status period of the master channel.
0	1	Generates an A/D trigger for the match interrupt during an up status period of the master channel.
1	0	Generates an A/D trigger for the match interrupt during an up or a down status period of the master channel
1	1	Generates an A/D trigger for the match interrupt during an up or a down status period of the master channel + valley interrupt of the master channel

TLSm	Output reversal control (m = 2 to 7)
0	Performs forward output of timer output (TO0m).
1	Performs reverse output of timer output (TO0m).

HIS1	TMOFF1 valid edge selection
0	Sets the falling edge as valid.
1	Sets the rising edge as valid.
The setting of HIS1 is enabled when HPS = 0.	

HIS0	TMOFF0 valid edge selection
0	Sets the falling edge as valid.
1	Sets the rising edge as valid.
The setting of HIS0 is enabled when HPS = 0.	

(**Cautions** and **Remark** are given on the next page.)

Cautions **1. There is no TMOFF1 pin in the 78K0R/IB3.**

2. The TMOFF0 and TMOFF1 pins are shared with external interrupt request inputs INTP3 and INTP7, respectively. Therefore, select the valid edges of INTP3 and INTP7 according to the valid edges of the TMOFF0 and TMOFF1 pins (For details about selecting the valid edges of INTP3 and INTP7, see 17.3 (4)).

3. When using the A/D conversion trigger output function (type 1) (see 7.5.8), set ATS1 to 0 and ATS0 to 1.

Remark n = 02 to 07

(20) TAU option status register (OPSR)

OPSR displays various statuses of the motor control option unit.

OPSR can be read by a 16-bit memory manipulation instruction.

Reset signal generation clears this register to 0000H.

Figure 7-11. Format of TAU Option Status Register (OPSR)

Address: F0222H After reset: 0000H R

Symbol	15	14	13	12	11	10	9	8	7	6	5	4	3	2	1	0
OPSR	0	0	0	0	0	0	HZOF1	HZOF0	0	0	0	0	0	0	HZIF1	HZIF0

HZOF1	Hi-Z control signal 1 [Note] operation status
0	Hi-Z control signal 1 is low level (normal timer output)
1	Hi-Z control signal 1 is high level (Hi-Z output status)

HZOF0	Hi-Z control signal 0 [Note] operation status
0	Hi-Z control signal 0 is low level (normal timer output)
1	Hi-Z control signal 0 is high level (Hi-Z output status)

HZIF1	TMOFF1 pin input signal/internal comparator 0 output signal status
0	TMOFF1 pin is at low level when HPS of OPMR is 0. Internal comparator 1 output signal is at low level when HPS of OPMR is 1.
1	TMOFF1 pin is at high level when HPS of OPMR is 0. Internal comparator 1 output signal is at high level when HPS of OPMR is 1.

HZIF0	TMOFF0 pin input signal /internal comparator 0 output signal status
0	TMOFF0 pin is at low level when HPS of OPMR is 0. Internal comparator 0 output signal is at low level when HPS of OPMR is 1.
1	TMOFF0 pin is at high level when HPS of OPMR is 0. Internal comparator 0 output signal is at high level when HPS of OPMR is 1.

Note The pins controlled by Hi-Z control signals 0 and 1 are as follows, according to the setting of the OPM bit of the OPMR register..

- When OPM = 0

  Hi-Z control signal 0 controls the TO02 to TO07 pins → Check the operating status by using HZOF1.

- When OPM = 1

  Hi-Z control signal 0 controls the TO02 and TO03 pins → Check the operating status by using HZOF0.

  Hi-Z control signal 1 controls the TO06 and TO07 pins → Check the operating status by using HZOF1.

Caution **There is no TMOFF1 pin in the 78K0R/IB3**.

(21) TAU option Hi-Z start trigger register (OPHS)

OPHS sets the Hi-Z controller software trigger. Set this register to 1 to start the Hi-Z output of the TO02 to TO07 pins when the software trigger is set as valid. Because OPHSn is a trigger bit, OPHSn will be cleared as soon as the TO02 to TO07 pins become high impedance (HZOFn = 1).

OPHS can be set by a 16-bit memory manipulation instruction.

Reset signal generation clears this register to 0000H.

Figure 7-12. Format of TAU Option Hi-Z Start Trigger Register (OPHS)

Address: F0224H After reset: 0000H W

Symbol	15	14	13	12	11	10	9	8	7	6	5	4	3	2	1	0
OPHS	0	0	0	0	0	0	0	0	0	0	0	0	0	0	OPHS1	OPHS0

OPHS1	Hi-Z control output signal 1
0	–
1	When OPM of OPMR is 0: Setting is invalid TO06 and TO07 pins is at Hi-Z output when OPM of OPMR is 1.

OPHS0	Hi-Z control output signal 0
0	–
1	TO02 to TO07 pins is at Hi-Z output when OPM of OPMR is 0. TO02 and TO03 pins is at Hi-Z output when OPM of OPMR is 1.

Caution Be sure to clear bits 15 to 2 to 0.

Remarks 1. When the OPHS register is read, 0000H is always read.

2. n = 0, 1

(22) TAU option Hi-Z stop trigger register (OPHT)

OPHT sets the Hi-Z controller software trigger. Set this register to 1 to cancel the Hi-Z status of the TO02 to TO07 pins when the software trigger is set as valid. Because OPHTn is a trigger bit, OPHTn will be cleared as soon as the Hi-Z cancellation request signal is output.

OPHT can be set by a 16-bit memory manipulation instruction.

Reset signal generation clears this register to 0000H.

Figure 7-13. Format of TAU Option Hi-Z Stop Trigger Register (OPHT)

Address: F0226H After reset: 0000H W

Symbol	15	14	13	12	11	10	9	8	7	6	5	4	3	2	1	0
OPHT	0	0	0	0	0	0	0	0	0	0	0	0	0	0	OPHT1	OPHT0

OPHT1	OPM	HSM	HZIF1	Hi-Z control output signal 1
0	–	–	–	–
1	1	1	0	The Hi-Z state of TO06 and TO07 is canceled in synchronization with the PWM cycle.
			1	The Hi-Z state of TO06 and TO07 cannot be cancelled.
	These bits are invalid other than when OPM = 1 and HSM = 1.			

OPHT0	OPM	HDM	HSM	HZIF1	HZIF0	Hi-Z control output signal 0
0	–	–	–	–	–	–
1	0	0	–	0	–	The Hi-Z state of TO02 to TO07 is canceled in synchronization with the PWM cycle.
	0	0	–	1	–	The Hi-Z state of TO02 to TO07 cannot be cancelled.
	1	–	1	–	0	The Hi-Z state of TO02 and TO03 is canceled in synchronization with the PWM cycle.
	1	–	1	–	1	The Hi-Z state of TO02 and TO03 cannot be cancelled.
	These bits are invalid other than when OPM = 0 and HDM = 0 or when OPM = 1 and HSM = 1					

Caution Be sure to clear bits 15 to 2 to 0.

Remarks 1. When the OPHT register is read, 0000H is always read.

2. OPM : Bit 15 of TAU option mode register (OPMR)
HSM : Bit 13 of TAU option mode register (OPMR)
HDM : Bit 12 of TAU option mode register (OPMR)
HZIF0 and 1 : Bits 0 and 1 of TAU option mode register (OPMR)

3. n = 0, 1

(23) TAU option controll register (OPCR)

OPCR specifies whether to enable detection of the edge of TMOFF0 or TMOFF1, or the internal comparator 0 output signal or internal comparator 1 output signal.

OPCR can be set by a 16-bit memory manipulation instruction.

Reset signal generation clears OPCR to 0000H.

Figure 7-14. Format of TAU Option Control Register (OPCR)

Address: F0228H After reset: 0000H R/W

Symbol	15	14	13	12	11	10	9	8	7	6	5	4	3	2	1	0
OPCR	0	0	0	0	0	0	0	0	0	0	0	0	0	0	HIE1	HIE0

HIE1	Enabling or disabling detection of the input edge of TMOFF1 or the internal comparator 1 output signal
0	Disables detection of the input edge of TMOFF1 or the internal comparator 1 output signal.
1	Enables detection of the input edge of TMOFF1 or the internal comparator 1 output signal, as specified by the HPS bit.

HIE0	Enabling or disabling detection of the input edge of TMOFF0 or the internal comparator 0 output signal
0	Disables detection of the input edge of TMOFF0 or the internal comparator 0 output signal.
1	Enables detection of the input edge of TMOFF0 or the internal comparator 0 output signal, as specified by the HPS bit.

Cautions 1. There is no TMOFF1 pin in the 78K0R/IB3.

2. Be sure to clear bits 15 to 2 to 0.

(24) Input switch control register (ISC)
(25) Noise filter enable registers 1, 2 (NFEN1, NFEN2)
(26) Port mode registers 0, 1, 3, 5, 7 (PM0, PM1, PM3, PM5, PM7)

The above-mentioned registers (24) to (26) are used in common with timer array unit TAUS.
For details, refer to **6.3 Registers Controlling Timer Array Unit TAUS**.

7.4 Basic Rule of Real-time Output Function

The basic rules of using the real-time output function are as follows.

(1) Set TREn to 1 to reflect the real-time output (set value of TROn) in the TOn output.
(2) The timing of when the set value of TROn is reflected in the TOn output is controlled by the INTTMn interrupt of the trigger generation channel.
(3) If TROn is changed during real-time output, the changed value is reflected in the TOn output by the occurrence of the INTTMn interrupt of the trigger generation channel. The set value of TROn is not reflected in the TOn output when any interrupt other than the INTTMn interrupt of the trigger generation channel occurs.
(4) The trigger generation channel is the channel in which TRCn is set to 1.
The trigger generation channel can be set regardless of whether the channel is a master or slave.
(5) The lower channel of the trigger generation channel (TRCn = 1), in which TRCn is set to 0, is controlled by the trigger generation channel. The higher channel of the trigger generation channel cannot be controlled by the trigger generation channel.

Example: If TRC02, TRC05, and TRC07 are set to 1 and the other TRCm (m = 03, 04, 06, 08 to 11) are set to 0, channels 2, 5, and 7 become the trigger generation channels.
- In the case of channel 2, channel 2 and the lower channels in which TRC03 and TRC04 are set to 0 (channels 3 and 4) are controlled.
- In the case of channel 5, channel 5 and the lower channels in which TRC06 is set to 0 (channel 6) are controlled.
- In the case of channel 7, channel 7 and the lower channels in which TRC08 to TRC11 are set to 0 (channel 8 to 11) are controlled.

(6) Even if TREn is set to 0 and TRCn is set to 1, the channel in which TRCn is set to 1 becomes the trigger generation channel.
(7) Even if TREn is set to 1, if that channel or higher channel is not set as the trigger generation channel (TRCn = 1), real-time output is not possible.

Example: If TRC00 and TRC01 are set to 0 and TRC02 is set to 1, channel 2 becomes the trigger generation channel.
In this case, if TRE00 is set to 0 and TRE01 and TRE02 are set to 1:
- TRE00 = 0 in channel 0, so real-time output cannot be used.
- TRE01 = 1 in channel 1, but neither channel 1 nor its higher channel are set as the trigger generation channel, so real-time output cannot be used.
- TRE02 = 1 in channel 2, and channel 2 is set as the trigger generation channel, so real-time output can be used.

(8) If TRC00 is set to 0 in channel 0, there will be no trigger generation channel set for the higher channel of channel 0, so even if TRE00 is set to 1, real-time output cannot be used for channel 0.

Remark n = 01 to 11 (Trigger generation channel: n = 01 to 10)

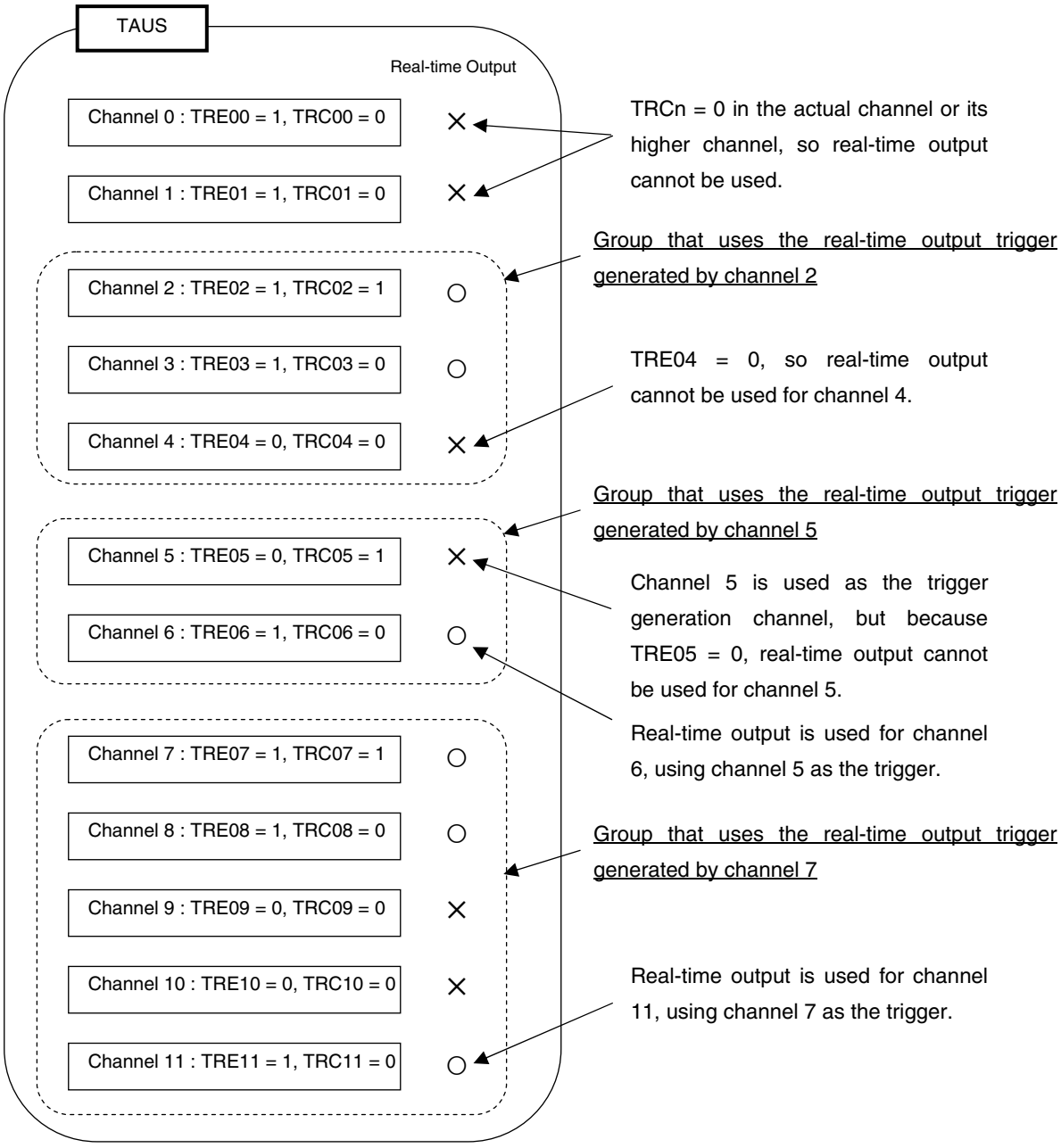
TAUS
Real-time Output
Channel 0 : TRE00 = 1, TRC00 = 0
Channel 1 : TRE01 = 1, TRC01 = 0
Channel 2 : TRE02 = 1, TRC02 = 1
Channel 3 : TRE03 = 1, TRC03 = 0
Channel 4 : TRE04 = 0, TRC04 = 0
Channel 5 : TRE05 = 0, TRC05 = 1
Channel 6 : TRE06 = 1, TRC06 = 0
Channel 7 : TRE07 = 1, TRC07 = 1
Channel 8 : TRE08 = 1, TRC08 = 0
Channel 9 : TRE09 = 0, TRC09 = 0
Channel 10 : TRE10 = 0, TRC10 = 0
Channel 11 : TRE11 = 1, TRC11 = 0
TRCn = 0 in the actual channel or its higher channel, so real-time output cannot be used.
Group that uses the real-time output trigger generated by channel 2
TRE04 = 0, so real-time output cannot be used for channel 4.
Group that uses the real-time output trigger generated by channel 5
Channel 5 is used as the trigger generation channel, but because TRE05 = 0, real-time output cannot be used for channel 5.
Real-time output is used for channel 6, using channel 5 as the trigger.
Group that uses the real-time output trigger generated by channel 7
Real-time output is used for channel 11, using channel 7 as the trigger.

7.5 Operation Using Inverter Control Function

7.5.1 Operation as real-time output function (type 1)

The values of TROn and TROm can be output from TOn and TOm by using the INTTMn output of the real-time output trigger generation channel.

This function is an extension of the function described in **6.7.1 Operation as interval timer/square wave output**.

The real-time output trigger generation channel (channel to which TRCn = 1 is set) outputs INTTMn at a fixed interval and generates a real-time output trigger.

The real-time output channel (channels to which TRCm = 0 and TREm = 1 are set) outputs the set value of TROm from TOm by the real-time output trigger.

The interrupt generation period of the real-time output trigger generation channel can be calculated by the following expression.

INTTMn generation period = Count clock period × (Set value of TDRn + 1)

The channel to which TRCn = 1 was set becomes the real-time output trigger generation channel and operates in the interval timer mode.

TCRn loads the value of TDRn at the first count clock, after the channel start trigger bit (TSn) is set to 1. At this time, INTTMn is not output and TOn is not toggled when MDn0 of TMRn is 0. INTTMn is output and TOn is toggled when MDn0 of TMRn is 1.

Afterward, TCRn counts down along with the count clock.

When TCRn has become 0000H, INTTMn is output and TOn is toggled upon the next count clock. TCRn loads the value of TDRn again at the same timing. Similar operation is continued hereafter.

The set value of TROn is output from TOn at the INTTMn output timing of the real-time output trigger generation channel.

TOm of the lower channel (real-time output channel (TRCm = 0)) of the real-time output trigger generation channel (TRCn = 1) is controlled by the TREm and TRCm bits. The TOm output level will not change by only rewriting TROm.

When TREm of the real-time output channel (TRCm = 0) is 1, TOm outputs the set value of TROm at the INTTMn output timing of the real-time output trigger generation channel. In the lower channel, TOm is not toggled at the INTTMn output timing of the real-time output trigger generation channel when TREm = 0 or TRCm = 1.

When this function is used, TCRm, TDRm, and INTTMm of the lower channel can be operated as different functions.

Remark n = 01 to 10 (78K0R/IB3: n = 01 to 07)
m = 02 to 11 (78K0R/IB3: m = 02 to 07)

Figure 7-15. Block Diagram of Operation as Real-Time Output Function (Type 1)

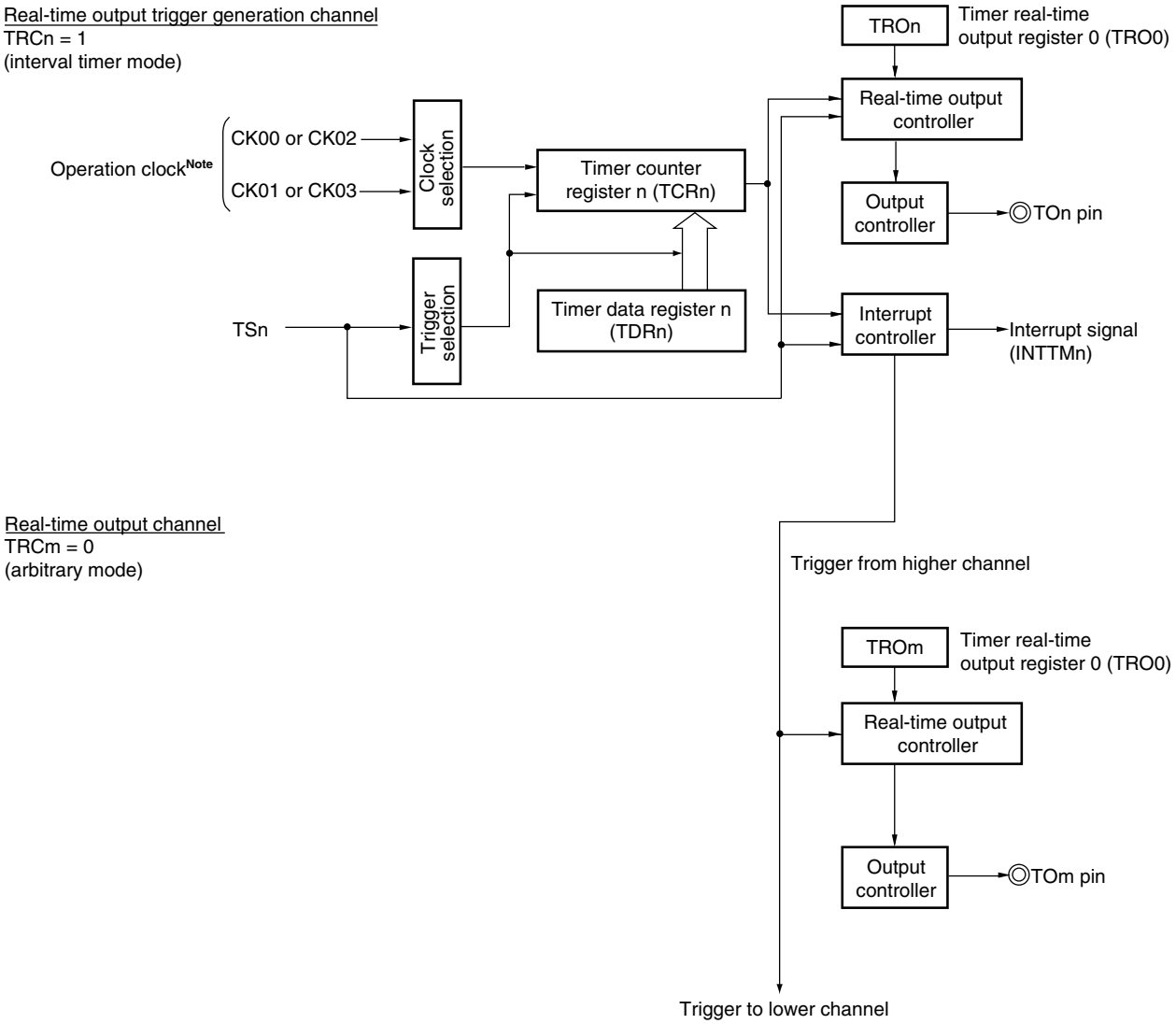

Note The operation clocks of channels 0 to 7 are selected from CK00 and CK01, and those of channels 8 to 11 from CK02 and CK03.

Remark n = 01 to 10 (78K0R/IB3: n = 01 to 07)
m = 02 to 11 (78K0R/IB3: m = 02 to 07)

Figure 7-16. Example of Basic Timing of Operation as Real-Time Output Function (Type 1)
(Default setting : TOn, TOm = 0, MDn0 = 1)

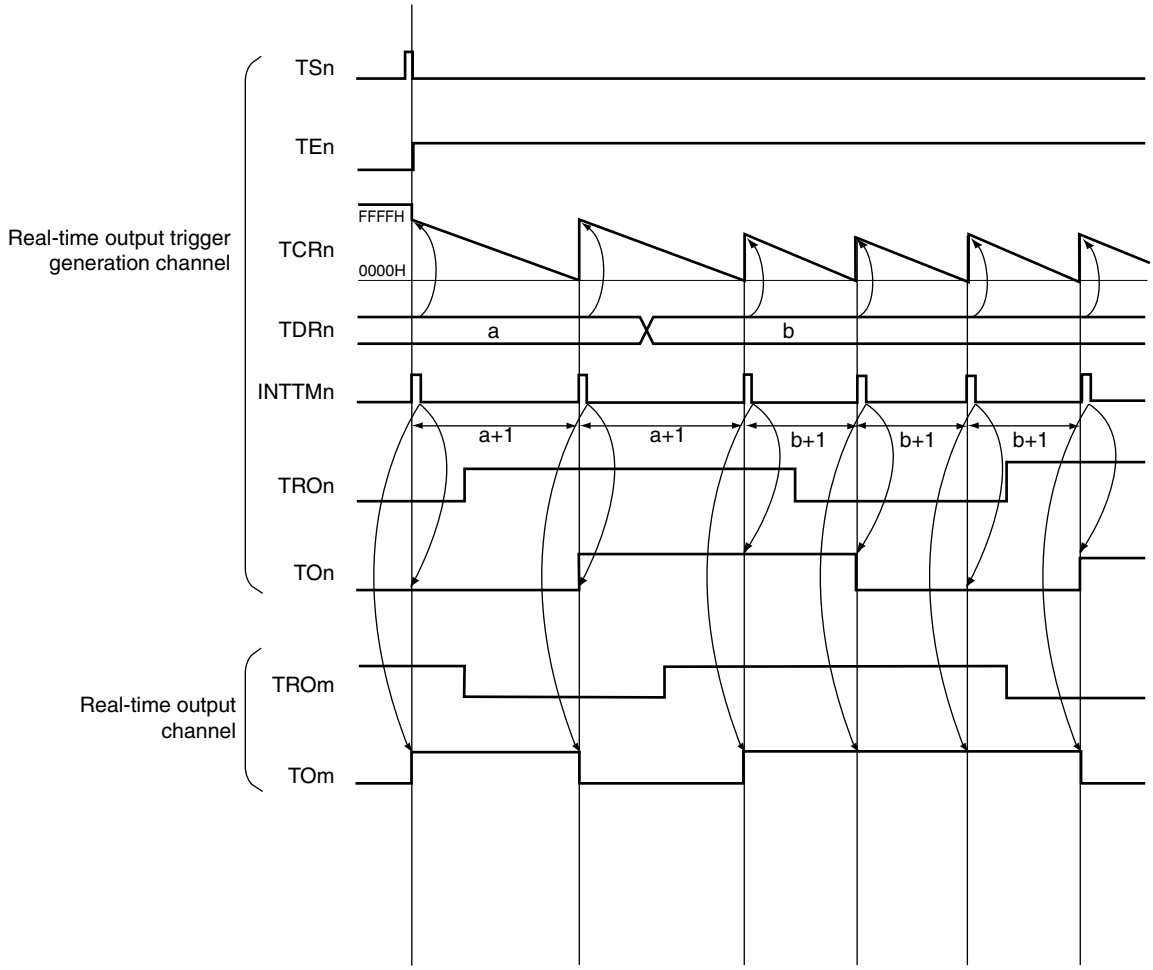

Remark n = 01 to 10 (78K0R/IB3: n = 01 to 07)
m = 02 to 11 (78K0R/IB3: m = 02 to 07)

Figure 7-17. Example of Set Contents of Registers During Operation as Real-Time Output Function (Type 1) (1/2)

(a) Timer mode register n (TMRn) of real-time output trigger generation channel (TRCn = 1)

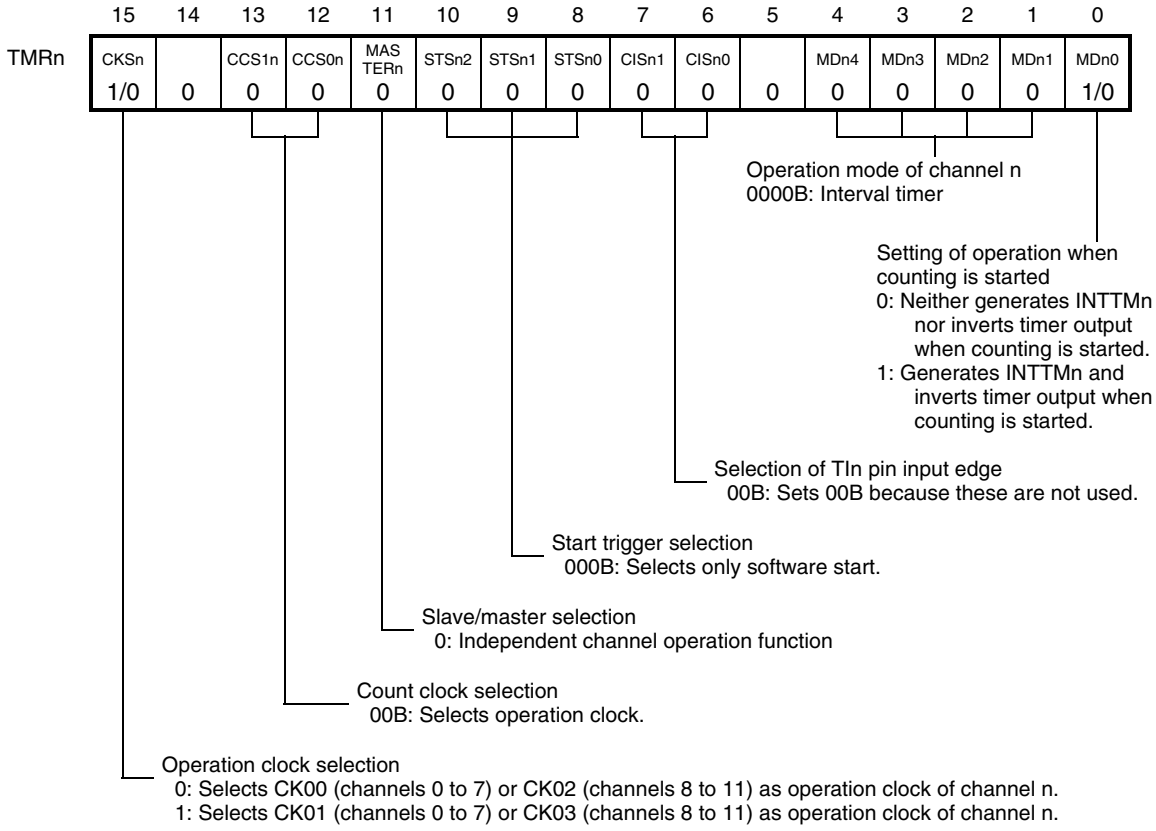

(b) Other registers of real-time output trigger generation channel (TRCn = 1)

TOE0:TOEn	0: Stops the TOn output operation by counting operation. 1: Enables the TOn output operation by counting operation.
TO0:TOn	0: Outputs a low level from TOn. 1: Outputs a high level from TOn.
TOM0:TOMn	0: Master channel output mode
TOT0:TOTn	0: Sets 0 when TOMn = 0 (master channel output mode).
TOL0:TOLn	0: Sets 0 when TOMn = 0 (master channel output mode).
TDE0:TDEn	0: Stops dead time control.
TRE0:TREn	0: Stops real-time output. 1: Enables real-time output.
TRO0:TROn	0: Outputs a low level as real-time output. 1: Outputs a high level as real-time output.
TRC0:TRCn	1: Operates as the real-time output trigger generation channel.
TME0:TMEn	0: Stops modulated output.

Remark n = 01 to 10 (78K0R/IB3: n = 01 to 07)

Figure 7-17. Example of Set Contents of Registers During Operation as Real-Time Output Function (Type 1) (2/2)

(c) Timer mode register m (TMRm) of real-time output channel (TRCm = 0)

With the real-time output function (type 1), TMRm of the channel when TRCm is set to 0 can be set arbitrarily.

(d) Other registers of real-time output channel (TRCm = 0)

TOE0:TOEm	0: Stops the TOm output operation by real-time output operation. 1: Enables the TOm output operation by real-time output operation.
TO0:TOm	0: Outputs a low level from TOm. 1: Outputs a high level from TOm.
TOM0:TOMm	0: Sets 0 when TREm = 1 (enables real-time output).
TOT0:TOTm	0: Sets 0 when TOMm = 0 (master channel output mode).
TOL0:TOLm	0: Sets 0 when TOMm = 0 (master channel output mode).
TDE0:TDEm	0: Stops dead time control.
TRE0:TREm	1: Enables real-time output.
TRO0:TROm	0: Outputs a low level as real-time output. 1: Outputs a high level as real-time output.
TRC0:TRCm	0: Does not operate as the real-time output trigger generation channel.
TME0:TMEm	0: Stops modulated output.

Remark m = 02 to 11 (78K0R/IB3: n = 02 to 07)

Figure 7-18. Operation Procedure of Real-Time Output Function (Type 1) (1/2)

	Software Operation	Hardware Status
TAUS default setting		Power-off status (Clock supply is stopped and writing to each register is disabled.)
	Sets the TAU0EN and TAUOPEN bits of the PER2 register to 1. →	Power-on status. Each channel stops operating. (Clock supply is started and writing to each register is enabled.)
	Sets the TPS0 register. Determines the clock frequencies of CK00 and CK01 for channels 0 to 7, and those of CK02 and CK03 for channels 8 to 11.	
Channel default setting	[Real-time output trigger generation channel (TRCn = 1)] Sets the TMRn register (determines operation mode of channel). Sets interval (period) value to the TDRn register. Sets the TRCm bit to 1 (trigger generation channel). Sets the TREm bit to 1 (real-time output enable). [Real-time output channel (TRCm = 0)] Sets the TRCm bit to 0 (non-trigger generation channel). Sets the TREm bit to 1 (real-time output enable).	Channel stops operating. (Clock is supplied and some power is consumed.) The TOn and TOm pins go into Hi-Z output state.
	Sets the TOEn and TOEm bits to 1 and enables output of TOn and TOm. →	TOn and TOm do not change because channel has stopped operating.
	Clears the port register and port mode register to 0. →	The TOn and TOm pins output the TOn and TOm set levels.
Operation start	Sets the TOEn and TOEm bits to 1 (only when operation is resumed). Sets the TSn bit of the trigger generation channel to 1. → The TSn bit automatically returns to 0 because it is a trigger bit.	[Real-time output trigger generation channel (TRCn = 1)] TEn = 1, and count operation starts. Value of TDRn is loaded to TCRn at the count clock input. INTTMn is generated if the MDn0 bit of the TMRn register is 1.
During operation	Set value of the TDRn register can be changed. The TCRn register can always be read. Set values of the TROn and TROm bits can be changed.	Counter (TCRn) counts down. When count value reaches 0000H, the value of TDRn is loaded to TCRn again and the count operation is continued. By detecting TCRn = 0000H, INTTMn is generated. After that, the above operation is repeated. The set value of TROm of the real-time output channel is output from TOm at the INTTMn output timing.
Operation stop	The TTn bit is set to 1. → The TTn bit automatically returns to 0 because it is a trigger bit.	TEn = 0, and count operation stops. TCRn holds count value and stops. The TOn output is not initialized but holds current status and stops.
	The TOEn and TOEm bits are cleared to 0 and values are set to TOn and TOm. →	The set values of TOn and TOm initialize the outputs of TOn and TOm.

Operation is resumed.

Remark n = 01 to 10, m = 02 to 11 (78K0R/IB3: n = 01 to 07, m = 02 to 07)

Figure 7-18. Operation Procedure of Real-Time Output Function (Type 1) (2/2)

	Software Operation	Hardware Status
TAUS stop	To hold the TOn and TOm pin output levels Clears the TOn and TOm bits to 0 after the values to be held are set to the port register. →	The TOn and TOm pin output levels are held by port function.
	When holding the TOn and TOm pin output levels is not necessary Switches the port mode register to input mode. →	The TOn and TOm pin output levels go into Hi-Z output state.
	The TAU0EN and TAUOPEN bits of the PER2 register are cleared to 0. →	Power-off status All circuits are initialized and SFR of each channel is also initialized. (The TOn and TOm bits are cleared to 0 and the TOn and TOm pins are set to port mode.)

Remark n = 01 to 10, m = 02 to 11 (78K0R/IB3: n = 01 to 07, m = 02 to 07)

7.5.2 Operation as real-time output function (type 2)

The values of TROn and TROm can be output from TOn and TOm by using the INTTMn output of the real-time output trigger generation channel. Real-time output by external pin input edge detection or software can be performed.

The real-time output function (type 2) is an extension of the function described in **6.7.4 Operation as input pulse interval measurement**.

The real-time output trigger generation channel (channel to which TRCn = 1 is set) outputs INTTMn and generates a real-time output trigger by valid edge detection of the TIn pin input or setting 1 to the channel start trigger (TSn).

The real-time output channel (channels to which TRCm = 0, TRE = 1 are set) outputs the set value of TROm from TOm by the real-time output trigger. The TCRn value is captured to TDRn at the INTTMn generation timing, but the TDRn value is not used.

The channel to which TRCn = 1 was set becomes the real-time output trigger generation channel and operates as an up counter in the capture mode.

TCRn starts counting up from 0000H along with the count clock, when the channel start trigger (TSn) is set to 1 while TEn is 0 or when the valid edge of the TIn input is detected.

At this time, INTTMn is not output and TOn is not toggled when MDn0 of the TMRn register is 0. INTTMn is output and TOn is toggled when MDn0 of the TMRn register is 1.

The counter (TCRn) is cleared to 0000H and INTTMn is output at the same time the count value is transferred (captured) to TDRn, when the valid edge of the TIn pin input is detected or when the channel start trigger (TSn) is set to 1.

The set value of TROn is output from TOn at the INTTMn output timing of the real-time output trigger generation channel.

TOm of the lower channel (real-time output channel) of the real-time output trigger generation channel (TRCn = 1) is controlled by the TREm bit. The TOm output level will not change by only rewriting TROm.

When TREm of the real-time output channel (TRCm = 0) is 1, TOm outputs the set value of TROm at the INTTMn output timing of the real-time output trigger generation channel. In the lower channel, TOm is not toggled at the INTTMn output timing of the real-time output trigger generation channel when TREm = 0 or TRCm = 1.

When the real-time output function (type 2) is used, TCRm, TDRm, and INTTMn of the lower channel can be operated as different functions.

Remark n = 01 to 10 (78K0R/IB3: n = 01 to 07)
m = 02 to 11 (78K0R/IB3: m = 02 to 07)

Figure 7-19. Block Diagram of Operation as Real-Time Output Function (Type 2)

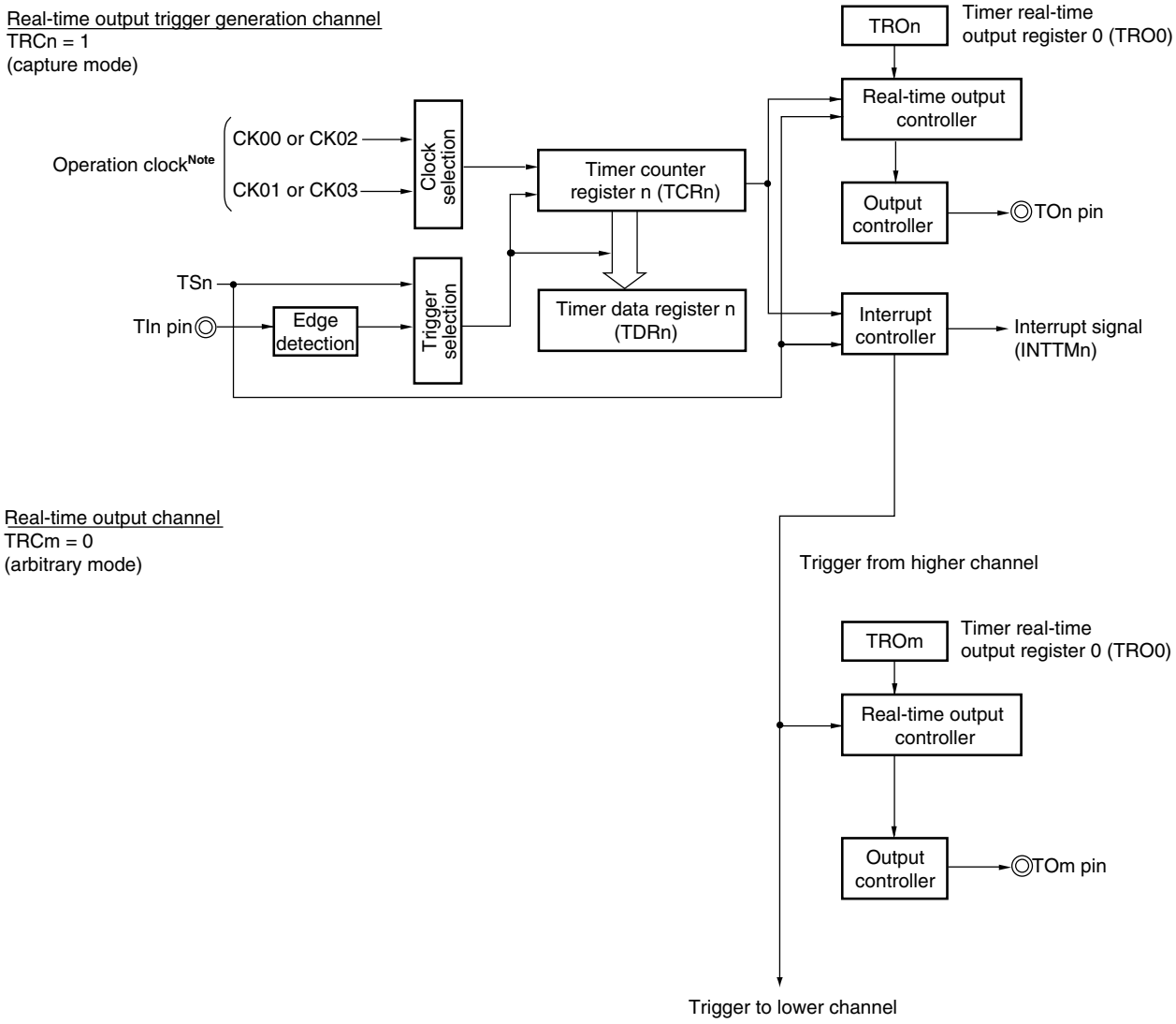

Note The operation clocks of channels 0 to 7 are selected from CK00 and CK01, and those of channels 8 to 11 from CK02 and CK03.

Remark n = 01 to 10 (78K0R/IB3: n = 01 to 07)
m = 02 to 11 (78K0R/IB3: m = 02 to 07)

Figure 7-20. Example of Basic Timing of Operation as Real-Time Output Function (Type 2)
(Default setting : TOn, TOm = 0, MDn0 = 0)

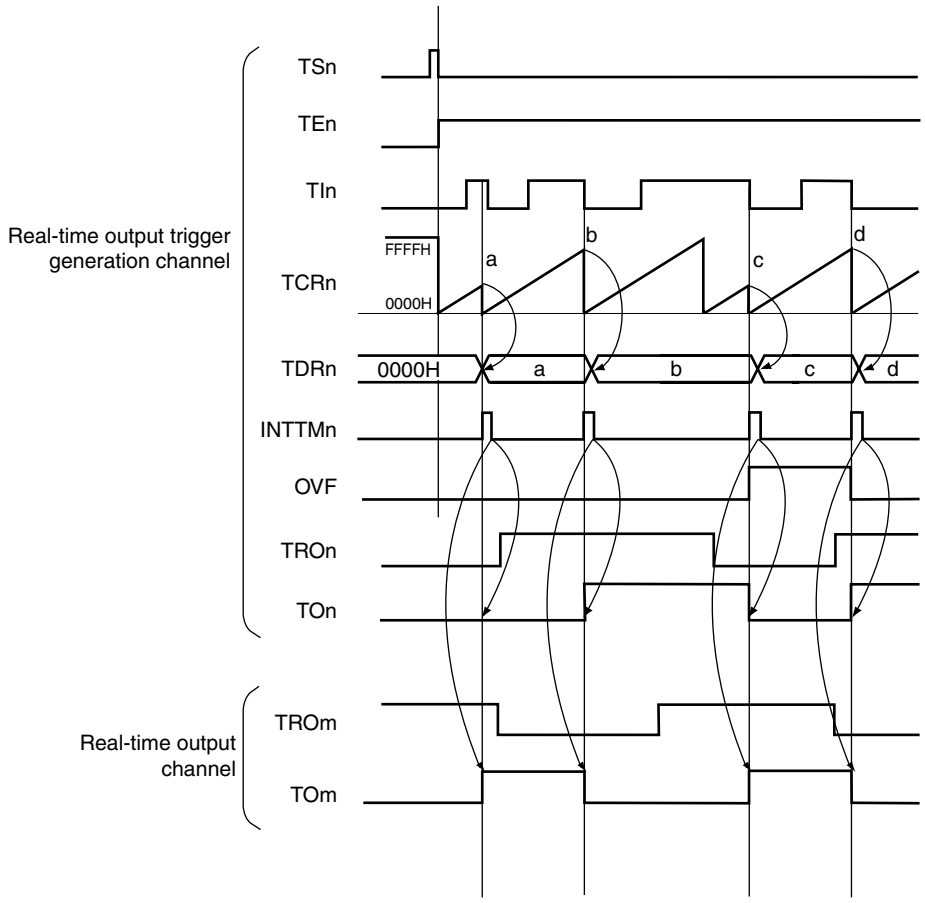

Remark n = 01 to 10 (78K0R/IB3: n = 01 to 07)
m = 02 to 11 (78K0R/IB3: m = 02 to 07)

Figure 7-21. Example of Set Contents of Registers During Operation as Real-Time Output Function (Type 2) (1/2)

(a) Timer mode register n (TMRn) of real-time output trigger generation channel (TRCn = 1)

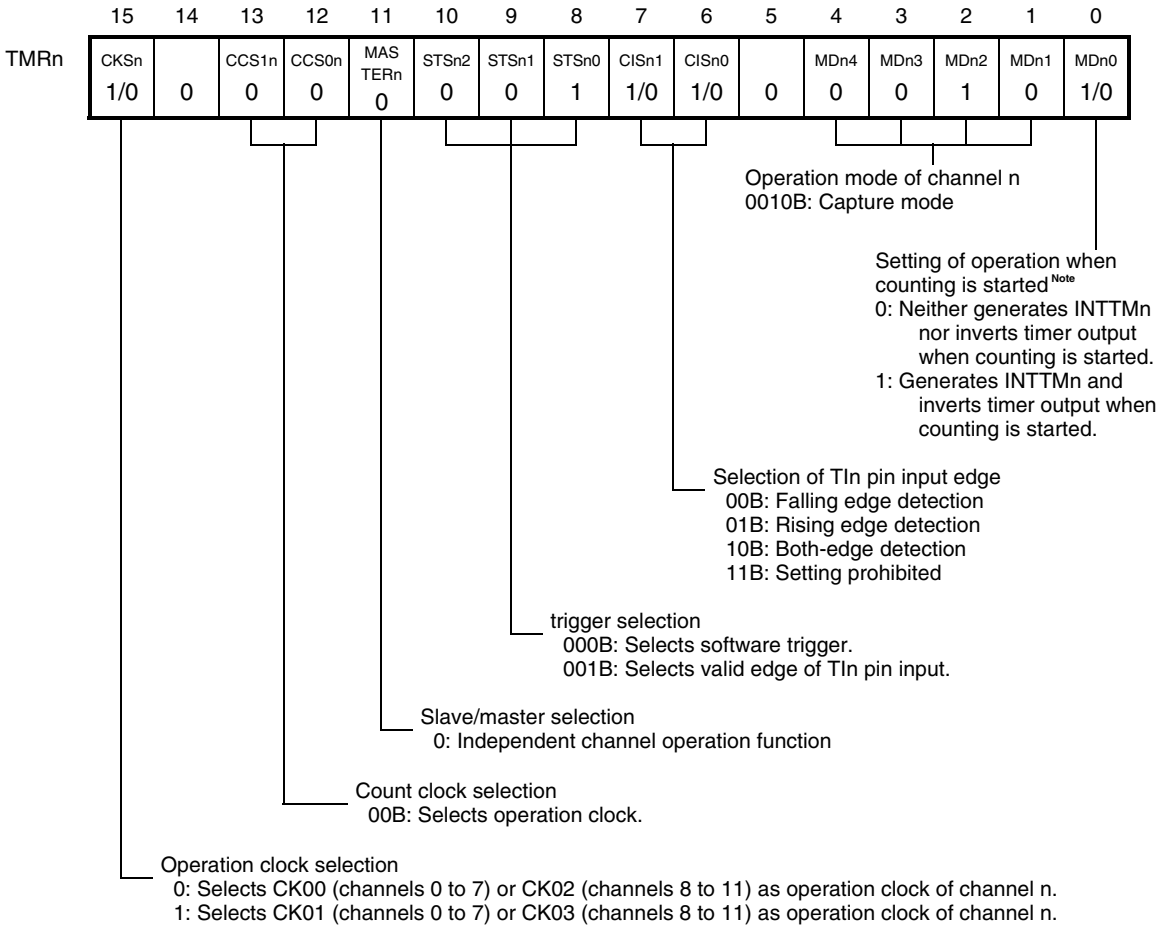

(b) Other registers of real-time output trigger generation channel (TRCn = 1)

TOE0:TOEn	0: Stops the TOn output operation by counting operation. 1: Enables the TOn output operation by counting operation.
TO0:TOn	0: Outputs a low level from TOn. 1: Outputs a high level from TOn.
TOM0:TOMn	0: Master channel output mode.
TOT0:TOTn	0: Sets 0 when TOMn = 0 (master channel output mode).
TOL0:TOLn	0: Sets 0 when TOMn = 0 (master channel output mode).
TDE0:TDEn	0: Stops dead time control.
TRE0:TREn	0: Stops real-time output. 1: Enables real-time output.
TRO0:TROn	0: Outputs a low level as real-time output. 1: Outputs a high level as real-time output.
TRC0:TRCn	1: Operates as the real-time output trigger generation channel.
TME0:TMEn	0: Stops modulated output.

Note If a software trigger is selected by using the STSn0 to STSn2 bits, set the MDn0 bit to 1.

Remark n = 01 to 10 (78K0R/IB3: n = 01 to 07)

Figure 7-21. Example of Set Contents of Registers During Operation as Real-Time Output Function (Type 2) (2/2)

(c) Timer mode register m (TMRm) of real-time output channel (TRCm = 0)

With the real-time output function (type 2), TMRm of the channel when TRCm is set to 0 can be set arbitrarily.

(d) Other registers of real-time output channel (TRCm = 0)

TOE0:TOEm	0: Stops the TOm output operation by real-time output operation. 1: Enables the TOm output operation by real-time output operation.
TO0:TOm	0: Outputs a low level from TOm. 1: Outputs a high level from TOm.
TOM0:TOMm	0: Sets 0 when TREm = 1 (enables real-time output).
TOT0:TOTm	0: Sets 0 when TOMm = 0 (master channel output mode).
TOL0:TOLm	0: Sets 0 when TOMm = 0 (master channel output mode).
TDE0:TDEm	0: Stops dead time control.
TRE0:TREm	1: Enables real-time output.
TRO0:TROm	0: Outputs a low level as real-time output. 1: Outputs a high level as real-time output.
TRC0:TRCm	0: Does not operate as the real-time output trigger generation channel.
TME0:TMEm	0: Stops modulated output.

Remark m = 02 to 11 (78K0R/IB3: n = 02 to 07)

Figure 7-22. Operation Procedure of Real-Time Output Function (Type 2) (1/2)

	Software Operation	Hardware Status
TAUS default setting		Power-off status (Clock supply is stopped and writing to each register is disabled.)
	Sets the TAU0EN and TAUOPEN bits of the PER2 register to 1. →	Power-on status. Each channel stops operating. (Clock supply is started and writing to each register is enabled.)
	Sets the TPS0 register. Determines the clock frequencies of CK00 and CK01 for channels 0 to 7, and those of CK02 and CK03 for channels 8 to 11.	
Channel default setting	Real-time output trigger generation channel (TRCn = 1) Sets the TMRn register (determines operation mode of channel). Sets the TRCm bit to 1 (trigger generation channel). Sets the TREm bit to 1 (real-time output enable). Real-time output channel (TRCm = 0) Sets the TRCm bit to 0 (non-trigger generation channel). Sets the TREm bit to 1 (real-time output enable).	Channel stops operating. (Clock is supplied and some power is consumed.) The TOn and TOm pins go into Hi-Z output state.
	Sets the TOEn and TOEm bits to 1 and enables output of TOn and TOm. Clears the port register and port mode register to 0. →	TOn and TOm do not change because channel has stopped operating. The TOn and TOm pins of the product output the TOn and TOm set levels.
Operation start	Sets the TOEn and TOEm bits to 1 (only when operation is resumed). Sets the TSn bit of the trigger generation channel to 1. → The TSn bit automatically returns to 0 because it is a trigger bit.	Real-time output trigger generation channel (TRCn = 1) TEn = 1, and count operation starts. Clears TCRn to 0000H by count clock input. INTTMn is generated if the MDn0 bit of the TMRn register is 1.
During operation	The TMRn register can only change the set values of the CISn1 and CISn0 bits. Set values of the TROn and TROm bits can be changed.	Counter (TCRn) counts up from 0000H and transfers (captures) the count value to TDRn when the valid edge of the TIn pin input is detected. At the same time, TCRn is cleared to 0000H and INTTMn is generated. The OVF bit of the TSRn register is set or cleared when an overflow occurs or does not occur at this time. After that, the above operation is repeated. The set value of TROm of the real-time output channel is output from TOm at the INTTMn output timing.
Operation stop	The TTn bit is set to 1. → The TTn bit automatically returns to 0 because it is a trigger bit.	TEn = 0, and count operation stops. TCRn holds count value and stops. TCRn also holds the OVF bit of the TSRn register. The TOn output is not initialized but holds current status and stops.
	The TOEn and TOEm bits are cleared to 0 and values are set to the TOn and TOm bits. →	The TOn and TOm pins output the set levels of TOn and TOm.

Operation is resumed.

Remark n = 01 to 10 (78K0R/IB3: n = 01 to 07)
m = 02 to 11 (78K0R/IB3: m = 02 to 07)

Figure 7-22. Operation Procedure of Real-Time Output Function (Type 2) (2/2)

	Software Operation	Hardware Status
TAUS stop	To hold the TOn and TOm pin output levels Clears the TOp and TOq bits to 0 after the values to be held are set to the port register. →	The TOn and TOm pin output levels are held by port function.
	When holding the TOn and TOm pin output levels is not necessary Switches the port mode register to input mode. →	The TOn and TOm pin output levels go into Hi-Z output state.
	The TAU0EN and TAUOPEN bits of the PER2 register are cleared to 0. →	Power-off status All circuits are initialized and SFR of each channel is also initialized. (The TOn and TOm bits are cleared to 0 and the TOn and TOm pins are set to port mode.)

Remark n = 01 to 10 (78K0R/IB3: n = 01 to 07)
m = 02 to 11 (78K0R/IB3: m = 02 to 07)

7.5.3 Operation as 6-phase PWM output function

By extending the PWM function and using seven channels in combination, a six PWM saw tooth wave modulation can be output.

A total of six PWM output signals, one each from slave channel 2, slave channel 3, slave channel 4, slave channel 5, slave channel 6, slave channel 7 are output. Slave channel 1 can be operated in any operation mode.

The period and duty factor of an output pulse can be calculated by the following expressions.

Pulse period = {Set value of TDR00 (master) + 1} × Count clock period
Duty [%] = {Set value of TDRm (slave)}/{Set value of TDR00 (master) + 1} × 100
0% output: Set value of TDRm (slave) = 0000H
100% output: Set value of TDRm (slave) ≥ Set value of TDR00 (master) + 1

Remark Although the duty value exceeds 100% if the set value of TDRm (slave) > {set value of TDR00 (master) + 1}, it is summarized into 100% output.

TCR00 of the master channel operates in the interval timer mode and counts the periods.

With the 6-phase PWM output function, the operation mode of slave channel 1 can be set freely.
(To use the modulated-output function, slave channel 1 is used as the real-time output trigger generation channel.
For details of the this function, refer to **7.5.13 Operation as non-complementary modulation output function(type 1**).)

TCRm of slave channels 2 to 7 operates in one-count mode, counts the duty factor, and outputs a PWM waveform from the TOm pin. TCRm loads the value of TDRm to TCRm, using INTTM00 of the master channel as a start trigger, and starts counting down. When TCRm = 0000H, TCRm outputs INTTMm and stops counting until the next start trigger (INTTM00 of the master channel) has been input. The output level of TOm becomes active one count clock after generation of INTTM00 from the master channel, and inactive when TCRm = 0000H.

TDR00 and TDRm of the master channel and slave channel become valid from the next period (generation of INTTM00 of the master channel).

Cautions 1. To rewrite both TDR00 of the master channel and TDRm of slave channels 2 to 7, write access is necessary at least twice. Since the values of TDR00 and TDRm are loaded to TCR00 and TCRm after INTTM00 is generated from the master channel, if rewriting is performed separately before and after generation of INTTM00 from the master channel, the TOm pin cannot output the expected waveform. To rewrite both TDR00 of the master and TDRm of the slave, be sure to rewrite both the registers immediately after INTTM00 is generated from the master channel.

2. TS00 or TSm cannot be set to "1" (forcible restart) while TE00 = 1 or TEm = 1. If TS00 or TSm is set to "1" while TE00 = 1 or TEm = 1, the counter value (TCR00 or TCRm) will be illegal and TO00 or TOm will not be able to output the expected waveform.

Remark m = 02 to 07

Figure 7-23. Block Diagram of Operation as 6-Phase PWM Output Function

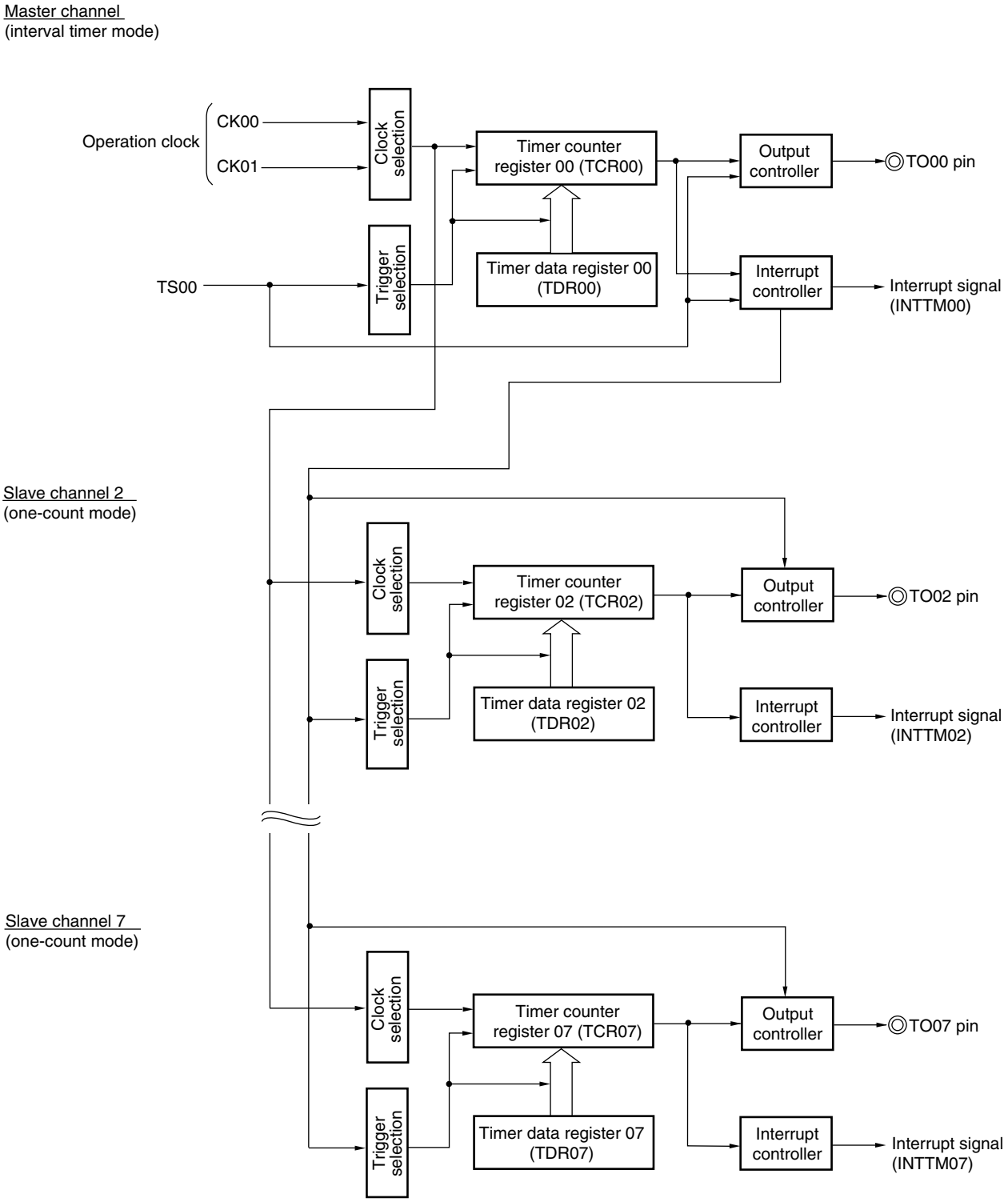

Figure 7-24. Example of Basic Timing of Operation as 6-Phase PWM Output Function (Default setting : TOm = 0)

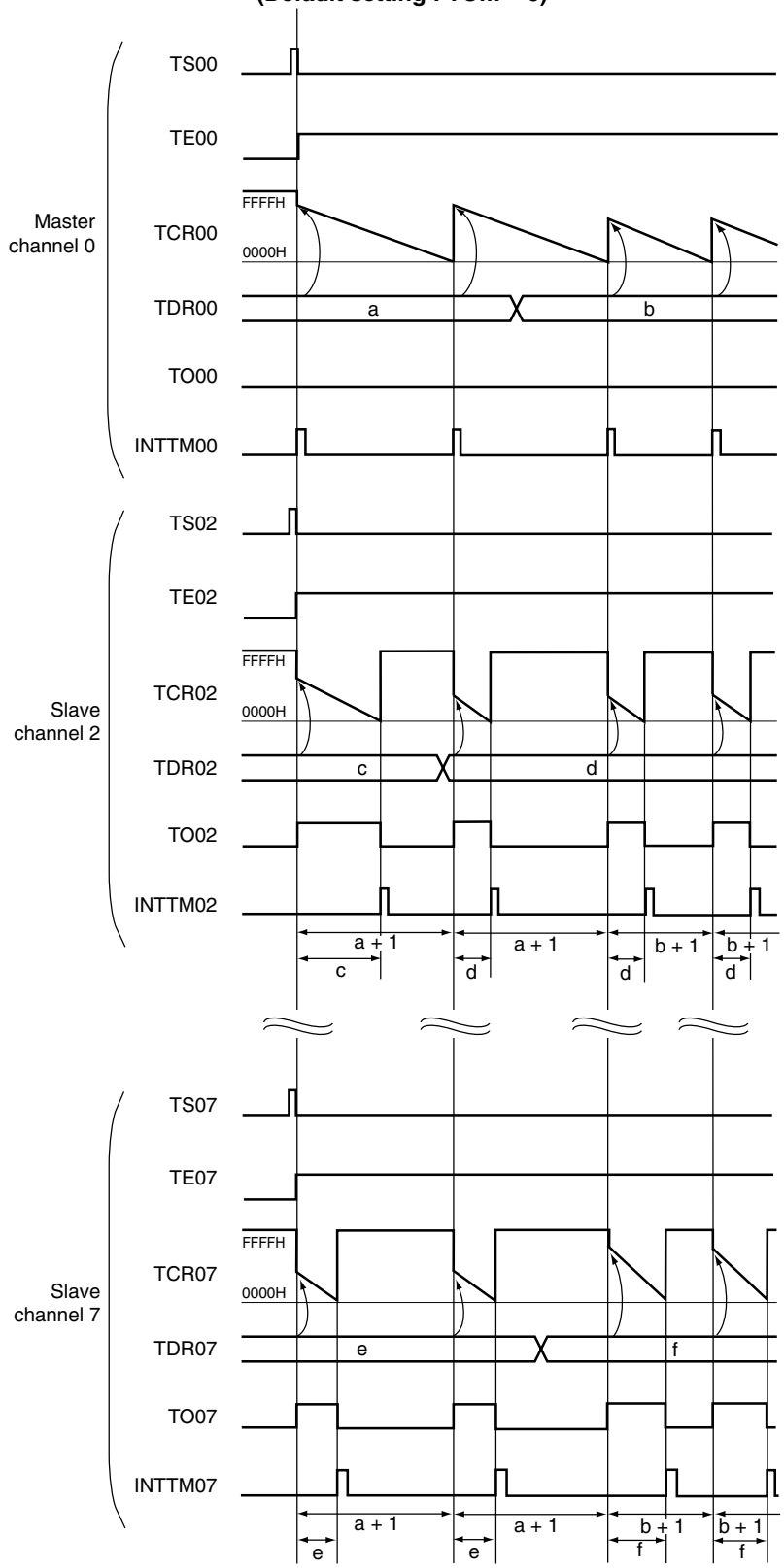

Remark m = 02 to 07

Figure 7-25. Example of Set Contents of Registers When 6-Phase PWM Output Function (Master Channel) Is Used

(a) Timer mode register 00 (TMR00)

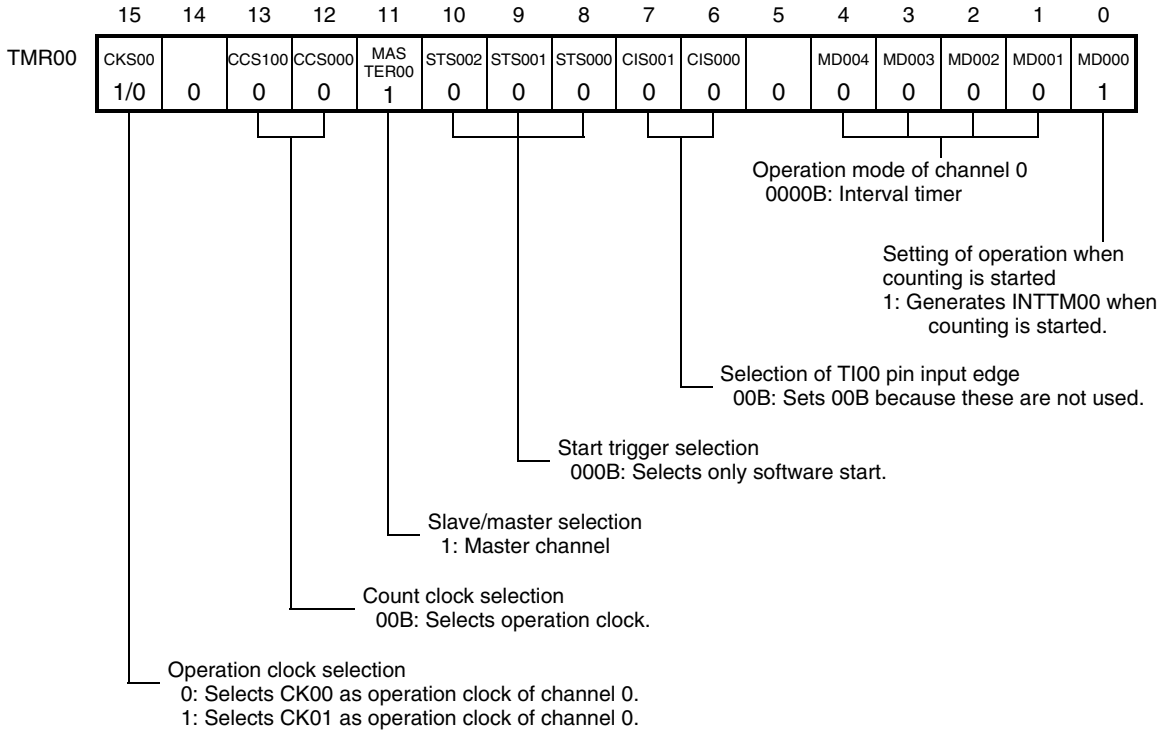

(b) Other registers

TOE0:TOE00	0: Stops the TO00 output operation by counting operation.
TO0:TO00	0: Outputs a low level from TO00.
TOM0:TOM00	0: Sets 0 when TOE00 = 0 (stops the TO00 output operation by counting operation).
TOT0:TOT00	0: Sets 0 when TOM00 = 0 (master channel output mode).
TOL0:TOL00	0: Sets 0 when TOM00 = 0 (master channel output mode).
TDE0:TDE00	0: Stops dead time control.
TRE0:TRE00	0: Stops real-time output.
TRO0:TRO00	0: Sets 0 when TRE00 = 0 (stops real-time output).
TRC0:TRC00	0: Does not operate as the real-time output trigger generation channel.
TME0:TME00	0: Stops modulated output.

Figure 7-26. Example of Set Contents of Registers When 6-Phase PWM Output Function (Slave Channels 2 to 7) Is Used

(a) Timer mode register m (TMRm)

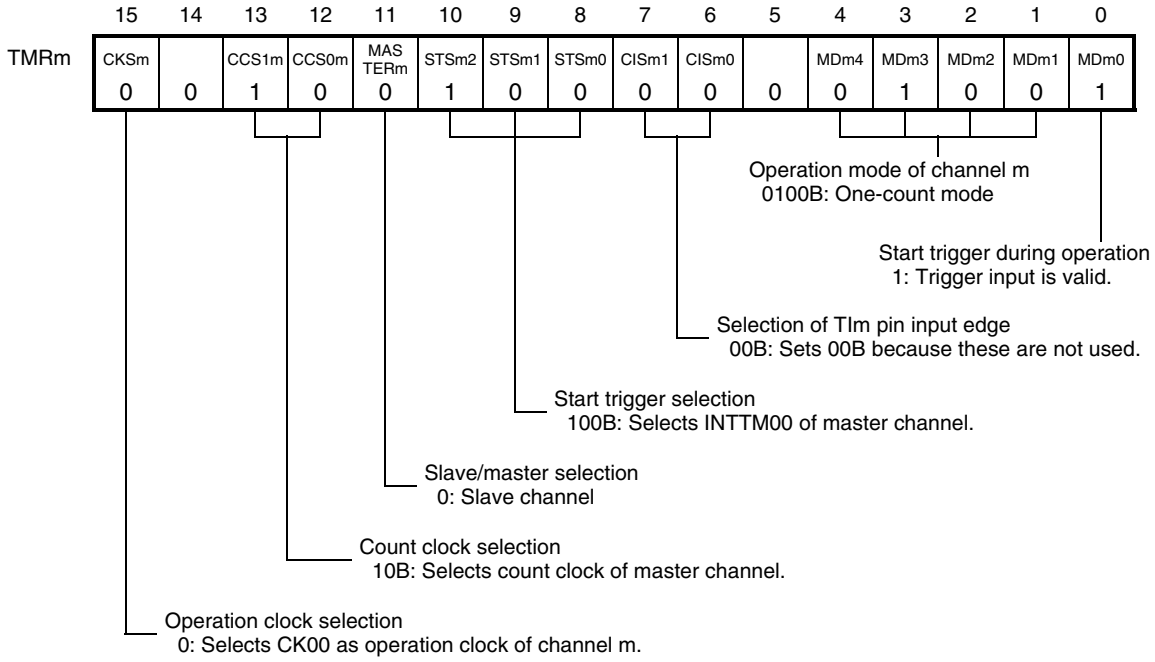

(b) Other registers

TOE0:TOEm	0: Stops the TOm output operation by counting operation. 1: Enables the TOm output operation by counting operation.
TO0:TOm	0: Outputs a low level from TOm. 1: Outputs a high level from TOm.
TOM0:TOMm	1: Sets slave channel output mode.
TOT0:TOTm	0: Generates other than triangular wave PWM output.
TOL0:TOLm	0: Positive logic output (active-high) 1: Inverted output (active-low)
TDE0:TDEm	0: Stops dead time control.
TRE0:TREm	0: Stops real-time output.
TRO0:TROm	0: Sets 0 when TREm = 0 (stops real-time output).
TRC0:TRCm	0: Does not operate as the real-time output trigger generation channel.
TME0:TMEm	0: Stops modulated output.

Remark m = 02 to 07

Figure 7-27. Operation Procedure When 6-Phase PWM Output Function Is Used (1/2)

	Software Operation	Hardware Status
TAUS default setting		Power-off status (Clock supply is stopped and writing to each register is disabled.)
	Sets the TAU0EN and TAUOPEN bits of the PER2 register to 1. →	Power-on status. Each channel stops operating. (Clock supply is started and writing to each register is enabled.)
	Sets the TPS0 register. Determines clock frequencies of CK00 and CK01.	
Channel default setting	Sets the TMR00 and TMRm registers of each channel to be used (determines operation mode of channels). An interval (period) value is set to the TDR00 register of the master channel, and a duty factor is set to the TDRm register of slave channels 2 to 7.	Channel stops operating. (Clock is supplied and some power is consumed.)
	Sets slave channels 2 to 7. Sets the TOMm bit to 1 (slave channel output mode). Sets the TOTm bit to 0 (generates other than triangular wave PWM output). Sets the TOLm bit and determines the active level of the TOm output. Sets the TOm bit and determines default level of the TOm output. →	The TOm pin goes into Hi-Z output state. The TOm default setting level is output when the port mode register is in output mode and the port register is 0.
	Sets the TOEm bit to 1 and enables operation of TOm. →	TOm does not change because channel has stopped operating.
	Clears the port register and port mode register to 0. →	The TOm pin outputs the TOm set level.
Operation start	Sets TOEm (slaves 2 to 7) to 1 (only when operation is resumed). The TS00 (master) and TSm (slaves 2 to 7) bits of the TS0 register are set to 1 at the same time. →	TE00 = 1, TEm = 1 When the master channel starts counting, INTTM00 is generated. Triggered by this interrupt, the slave channels 2 to 7 also start counting.
During operation	Set values of the TDR00 and TDRm registers can be changed after INTTM00 of the master channel is generated. The TCR00 and TCRm registers can always be read. Set values of the TOL0, TO0, and TOE0 registers can be changed.	The counter of the master channel loads the TDR00 value to TCR00 and counts down. When the count value reaches TCR00 = 0000H, INTTM00 is generated. At the same time, the value of the TDR00 register is loaded to TCR00, and the counter starts counting down again. At slave channels 2 to 7, the values of the TDRm register are transferred to TCRm, triggered by INTTM00 of the master channel, and the counter starts counting down. The output levels of TOm become active one count clock after generation of the INTTM00 output from the master channel. It becomes inactive when TCRm = 0000H, and the counting operation is stopped. After that, the above operation is repeated.

Operation is resumed. (from next page)

Remark m = 02 to 07

Figure 7-27. Operation Procedure When 6-Phase PWM Output Function Is Used (2/2)

Operation is resumed. (to forward page)

	Software Operation	Hardware Status
Operation stop	The TT00 (master) and TTm (slaves 2 to 7) bits are set to 1 at the same time. →	TE00, TEm = 0, and count operation stops. TCR00 and TCRm hold count value and stops. The TOm output is not initialized but holds current status.
	The TOEm bits of slave channels 2 to 7 are cleared to 0 and value is set to the TOm bit. →	The TOm pin outputs the TOm set level.
TAUS stop	To hold the TOm pin output level Clears the TOm bit to 0 after the value to be held is set to the port register. →	The TOm pin output level is held by port function.
	When holding the TOm pin output level is not necessary Switches the port mode register to input mode. →	The TOm pin output level goes into Hi-Z output state.
	The TAU0EN and TAUOPEN bits of the PER2 register are cleared to 0. →	Power-off status All circuits are initialized and SFR of each channel is also initialized. (The TO00 and TOm bits are cleared to 0 and the TO00 and TOm pins are set to port mode.)

Remark m = 02 to 07

7.5.4 Operation as triangular wave PWM output function

Multiple channels can be used in combination to output a triangular wave modulation PWM for motor control.

The period is set by the master channel and a triangular wave modulation PWM is output by the slave channel. When multiple triangular wave modulation PWMs are output for a period, the triangular wave modulation PWM output can be added by adding a slave channel.

The output pulse period and duty factor can be calculated by the following expression.

Pulse period (down/up) = {Set value of TDR00 (master) + 1} × 2 × Count clock period
Duty factor [%] = {Set value of TDR00 (master) + 1 − Set value of TDRm (slave)}/{Set value of TDR00 (master) + 1} × 100
0% output: Set value of TDRm (slave) ≥ {Set value of TDR00 (master) + 1}
100% output: Set value of TDRm (slave) = 0000H

Remark Although the duty factor exceeds 0% if the set value of TDRm (slave) > {set value of TDR00 (master) + 1}, it is summarized into 0% output.

The master channel operates in the interval timer mode and counts the periods.

TCR00 loads the value of TDR00 at the first count clock, after the channel start trigger bit (TS00) is set to 1.

Afterward, TCR00 counts down along with the count clock.

When TCR00 has become 0000H, INTTM00 is output and TO00 is toggled upon the next count clock. TCR00 loads the value of TDR00 again at the same timing. Similar operation is continued hereafter.

A carrier period is generated in two periods of the master channel count.

The count operation of the slave channel is controlled by defining the first period of the master channel as a down status of the slave channel and the second period as an up status of the slave channel.

TO00 of the master channel outputs up and down statuses.

TO00 of the TO0 register must be manipulated while TOE00 of the TOE0 register is 0 and the default level must be set, because up and down statuses are output.

TO00 of TO0 is set to 1 when MD000 of the TMR00 register is 0, and TO00 is set to 0 when MD000 is 1.

By setting the default level, a high level is output from TO00 during a down status and a low level is output during an up status.

TCRm of the slave channel operates in the up and down count mode, and counts the duty.

TCRm loads the value of TDRm at the first count clock, after the channel start trigger bit (TSm) is set to 1. Hereafter, counting up and counting down is switched in accordance with the operation of the master channel. INTTMm is output when TCRm becomes 0000H.

The TOm output becomes an active level when TCRm generates INTTMm while counting down, and it becomes an inactive level when TCRm generates INTTMm while counting up.

TCRm loads the value of TDRm again when INTTM00 is generated in an up status (crest of a triangular wave) of the master channel. Similar operation is continued hereafter.

Remark m = 02 to 07

Cautions 1. TDR00 of the master channel must be rewritten during an up status period of the slave channel (The count status is judged by CSF (TSRm register) of the slave channel or the TOn output level of the master channel). When the value of TDR00 is rewritten separately during an up status and a down status, the periods of the up status and down status differ and the TO00 pin cannot output an expected waveform, because the value of TDR00 of the rewritten master channel becomes valid during the next down status period.

2. TS00 or TSm cannot be set to "1" (forcible restart) while TE00 = 1 or TEm = 1. If TS00 or TSm is set to "1" while TE00 = 1 or TEm = 1, the counter value (TCR00 or TCRm) will be illegal and TO00 or TOm will not be able to output the expected waveform.

Figure 7-28. Block Diagram of Operation as Triangular Wave PWM Output Function

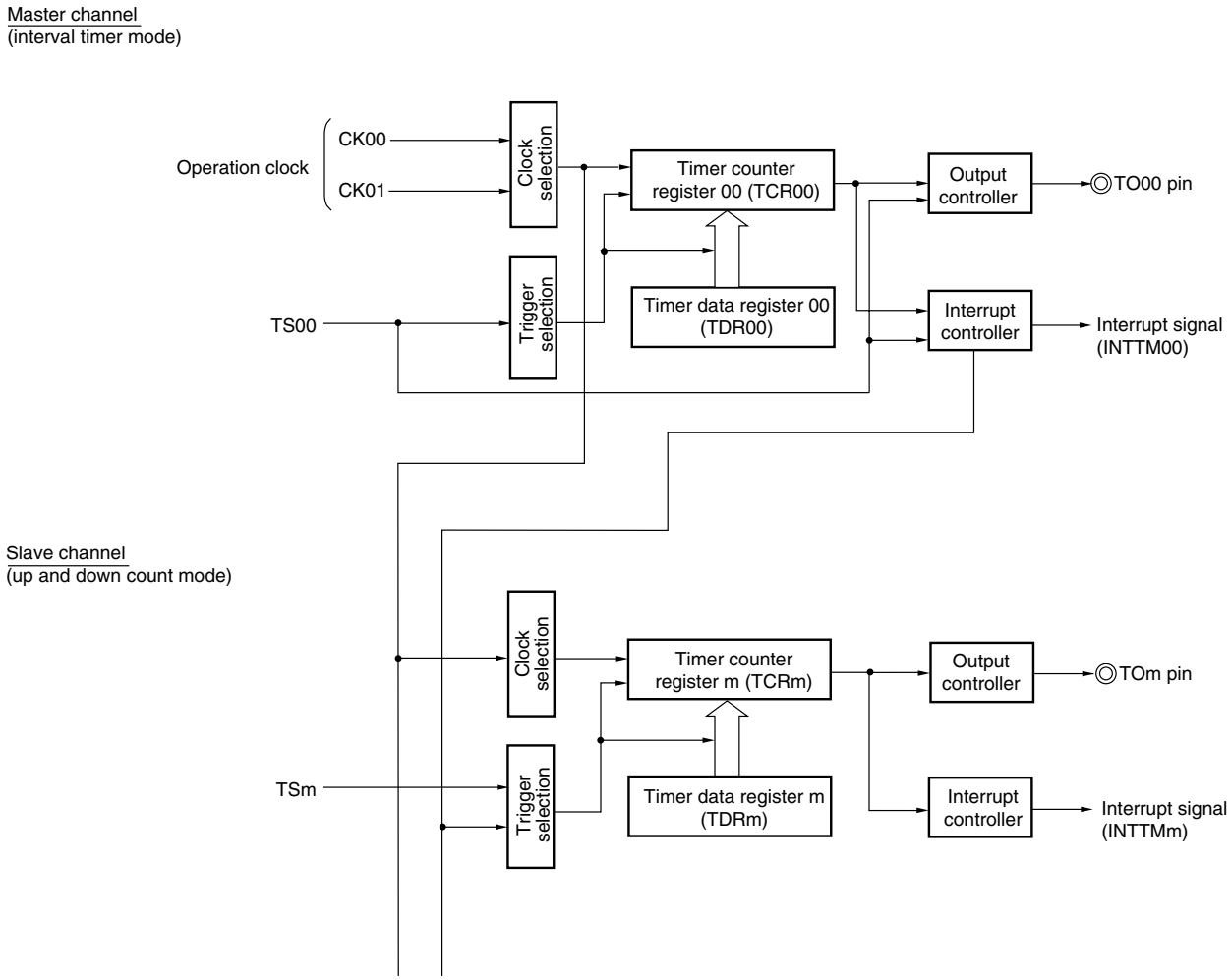

Remark m = 02 to 07

Figure 7-29. Example of Basic Timing of Operation as Triangular Wave PWM Output Function (Default setting : TO00, TOm = 0, MD000 = 1)

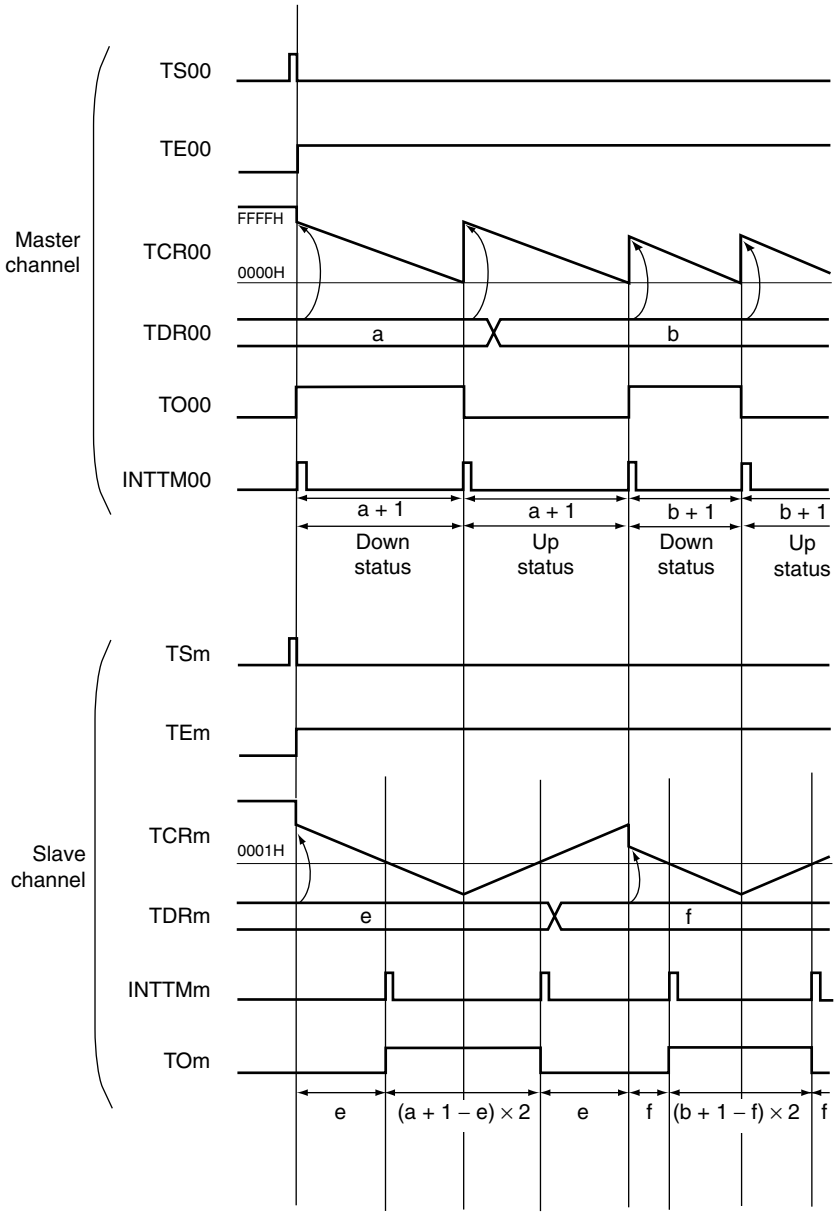

Remark m = 02 to 07

Figure 7-30. Example of Set Contents of Registers When Triangular Wave PWM Output Function (Master Channel) Is Used

(a) Timer mode register 00 (TMR00)

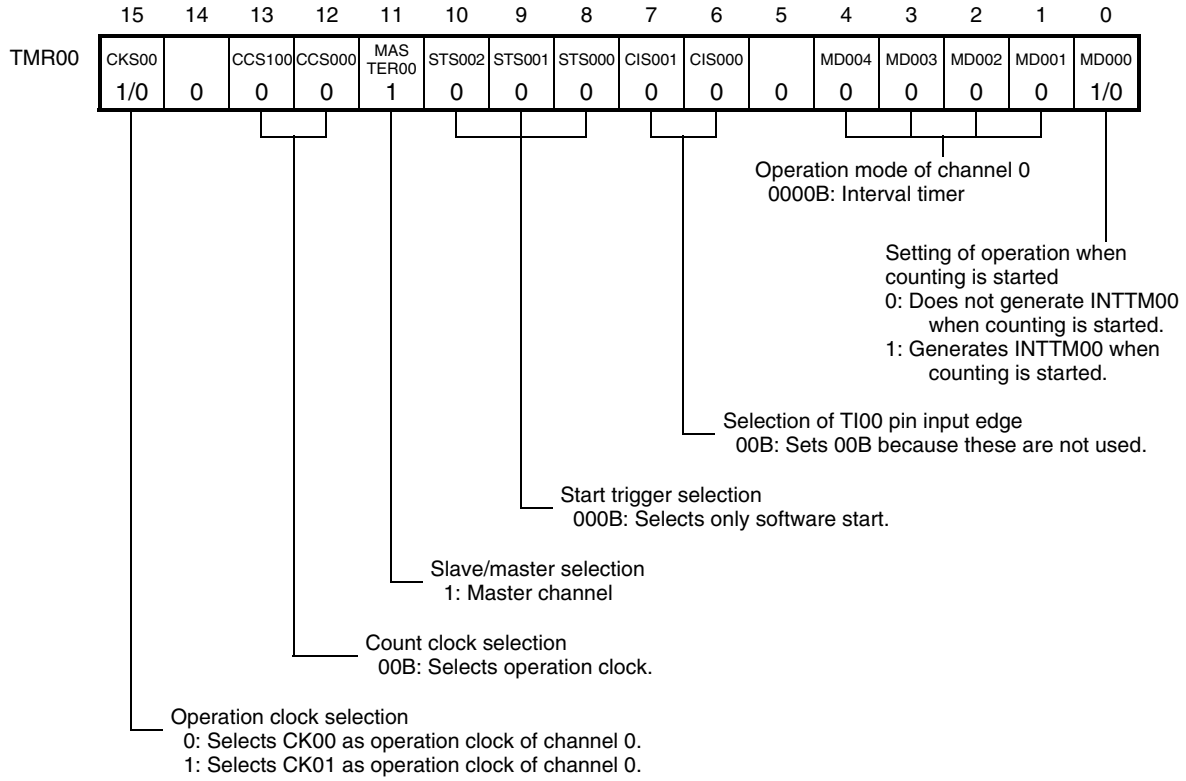

(b) Other registers

TOE0:TOE00[Note 1]	0: Stops the TO00 output operation by counting operation. 1: Enables the TO00 output operation by counting operation.
TO0:TO00[Note 2]	0: Outputs a low level from TO00. 1: Outputs a high level from TO00.
TOM0:TOM00	0: Sets master channel output mode.
TOT0:TOT00	0: Sets 0 when TOM00 = 0 (master channel output mode).
TOL0:TOL00	0: Sets 0 when TOM00 = 0 (master channel output mode).
TDE0:TDE00	0: Stops dead time control.
TRE0:TRE00	0: Stops real-time output.
TRO0:TRO00	0: Sets 0 when TRE00 = 0 (stops real-time output).
TRC0:TRC00	0: Does not operate as the real-time output trigger generation channel.
TME0:TME00	0: Stops modulated output.

Notes 1. Set TOE00 of the master channel to “1” in the following cases.

- When an INTTMM0, INTTMV0, INTTMM1, or INTTMV1 interrupt signal is used
- When Hi-Z output is controlled or an A/D conversion trigger is selected via control by using the OPMR, OPHS, OPHT, and OPCR registers

2. When MD000 = 1, TO00 = 0,
When MD000 = 0, TO00 = 1

Figure 7-31. Example of Set Contents of Registers When Triangular Wave PWM Output Function (Slave Channel) Is Used

(a) Timer mode register m (TMRm)

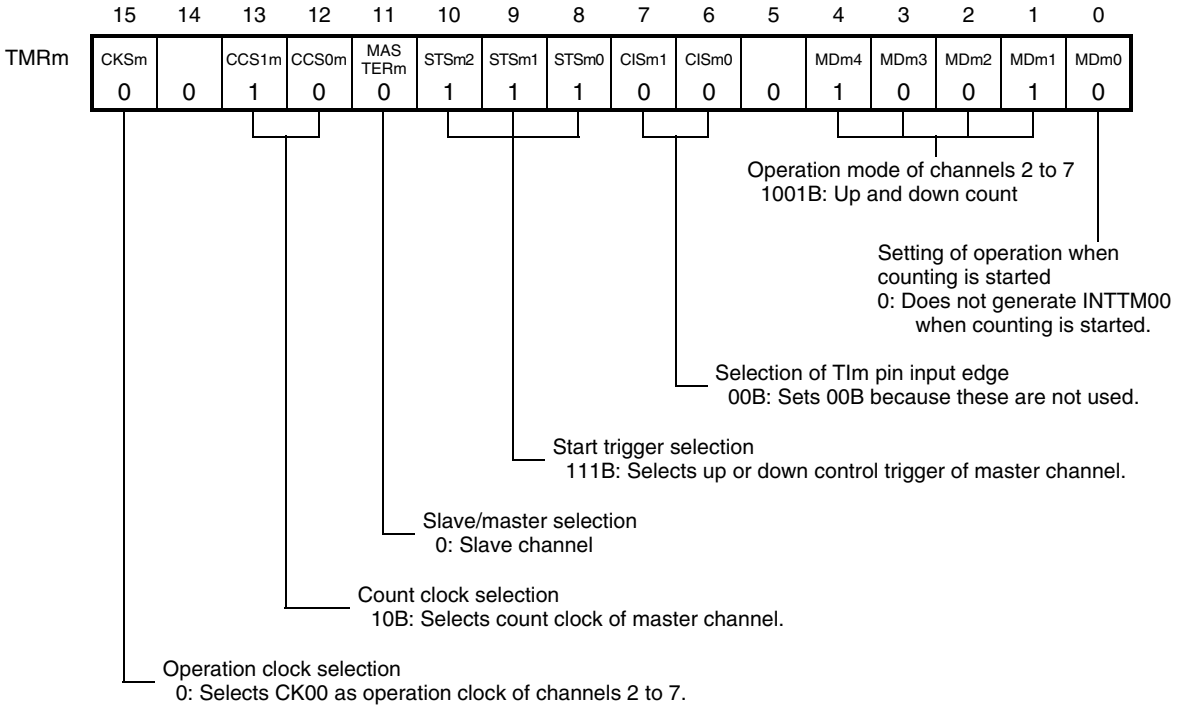

(b) Other registers

TOE0:TOEm	0: Stops the TOm output operation by counting operation. 1: Enables the TOm output operation by counting operation.
TO0:TOm	0: Outputs a low level from TOm. 1: Outputs a high level from TOm.
TOM0:TOMm	1: Sets slave channel output mode.
TOT0:TOTm	1: Sets triangular wave PWM output.
TOL0:TOLm	0: Positive logic output (active-high) Note
TDE0:TDEm	0: Stops dead time control.
TRE0:TREm	0: Stops real-time output.
TRO0:TROm	0: Sets 0 when TREm = 0 (stops real-time output).
TRC0:TRCm	0: Does not operate as the real-time output trigger generation channel.
TME0:TMEm	0: Stops modulated output.

Note Set the TLS7 to TLS2 bits of the OPMR register to 1 for inverted output.

Figure 7-32. Operation Procedure When Triangular Wave PWM Output Function Is Used (1/2)

	Software Operation	Hardware Status
TAUS default setting		Power-off status (Clock supply is stopped and writing to each register is disabled.)
	Sets the TAU0EN and TAUOPEN bits of the PER2 register to 1.	Power-on status. Each channel stops operating. (Clock supply is started and writing to each register is enabled.)
	Sets the TPS0 register. Determines the clock frequencies of CK00 and CK01.	
Channel default setting	Sets the TMR00 and TMRm registers of each channel to be used (determines operation mode of channels). An interval (period) value is set to the TDR00 register of the master channel, and a duty factor is set to the TDRm register of the slave channel.	Channel stops operating. (Clock is supplied and some power is consumed.)
	Sets the master channel. Sets the TOM00 bit of the TOM0 register to 0 (master channel output mode). Sets the slave channel. Sets the TOMm bit of the TOM0 register to 1 (slave channel output mode). Sets the TOTm bit of the TOT0 register to 1 (triangular wave PWM output). Sets the TOLm bit to 0 (positive logic output). Sets the TOm bit and determines default level of the TOm output.	The TO00 and TOm pins go into Hi-Z output states. The TOn default setting level is output when the port mode register is in output mode and the port register is 0.
	Sets the TOE00 and TOEm bits to 1 and enables operation of TO00 and TOm. Clears the port register and port mode register to 0.	TO00 and TOm do not change because channel stops operating. The TO00 and TOm pins output the TO00 and TOm set levels.
Operation start	Sets the TOE00 (master) and TOEm (slave) bits to 1 (only when operation is resumed). The TS00 (master) and TSm (slave) bits of the TS0 register are set to 1 at the same time. The TS00 and TSm bits automatically return to 0 because they are trigger bits.	TE00 = 1, TEm = 1 When the master and slave channels starts counting and the MD000 bit of the TMR00 register is 1, INTTM00 is generated.
During operation	The set value of the TDR00 (master) register must be changed during an up status period. The set value of the TDRm (slave) register can be changed. The TCR00 and TCRm registers can always be read. The TSRm (slave) register can always be read.	At the master channel, a period is generated and count operation of the slave channel is controlled. TCR00 loads the value of TDR00 and counts down. When the count value reaches TCR00 = 0000H, INTTM00 is generated. At the same time, the value of the TDR00 register is loaded to TCR00, and the counter starts counting down again. At the slave channel, INTTM00 of the master channel is used as the trigger to switch counting down and counting up. INTTMm is generated upon detection of TCRm = 0001H and TOm outputs a triangular wave PWM. At the master channel, TCR00 loads the value of TDR00 again and count operation is continued by the generation of INTTM00 during an up status. After that, the above operation is repeated.

Operation is resumed. (from next page)

Remark m = 02 to 07

Operation is resumed. (to forward page)

Figure 7-32. Operation Procedure When Triangular Wave PWM Output Function Is Used (2/2)

	Software Operation	Hardware Status
Operation stop	The TT00 (master) and TTm (slave) bits are set to 1 at the same time. →	TE00, TEm = 0, and count operation stops. TCR00 and TCRm hold count value and stops. The TO00 and TOm outputs are not initialized but hold current statuses.
	The TOE00 and TOEm bits are cleared to 0 and values are set to the TO00 and TOm bits. →	The TO00 and TOm pins output the TO00 and TOm set levels.
TAUS stop	To hold the TO00 and TOm pin output levels Clears the TO00 and TOm bits to 0 after the value to be held is set to the port register. →	The TO00 and TOm pin output levels are held by port function.
	When holding the TO00 and TOm pin output levels is not necessary Switches the port mode register to input mode. →	The TO00 and TOm pin output levels go into Hi-Z output states.
	The TAU0EN and TAUOPEN bits of the PER2 register are cleared to 0. →	Power-off status All circuits are initialized and SFR of each channel is also initialized. (The TO00 and TOm bits are cleared to 0 and the TO00 and TOm pins are set to port mode.)

Remark m = 02 to 07

7.5.5 Operation as triangular wave PWM output function with dead time

The triangular wave modulation PWM output function with dead time uses four channels of channels 0 to 3 or channels 4 to 7 in combination to output a triangular wave PWM waveform (with dead time).

It outputs riangular wave modulation PWM with dead times from slave channels 2 and 3, and slave channels 6 and 7. Slave channels 1 and 5 can be operated in any operation mode.

The output pulse cycle, positive-phase active width, and reverse-phase active width can be calculated by using the following equations.

Pulse period (down/up) = {Set value of TDRn (master) + 1} × 2 × Count clock period
positive-phase active width = {{{Set value of TDRn (master) + 1} − {Set value of TDRp (slave p) }} × 2 − {Set value of TDRq (slave q) + 1}} × Count clock period
reverse-phase active width = {{{Set value of TDRn (master) + 1} − {Set value of TDRp (slave p) }} × 2 + {Set value of TDRq (slave q) + 1}} × Count clock period

Errors will be included in the output waveforms when the dead time function is used. The output width of a positive-phase wave will be shortened by the amount of dead time, and the output width of a reverse- phase wave will be extended by the amount of dead time. The linearity of output transition will be lost in the neighborhood of 0% and 100% outputs due to the errors.

0% output: Set value of TDRp (slave p) ≥ Set value of TDRn (master) + 1
100% output: Set value of TDRp (slave p) = 0000H

At the master channel, channels 0 and 4 are used.

TCRn operates as a down counter in the interval timer mode.

TCRn loads the value of TDRn at the first count clock, after the channel start trigger bit (TSn) is set to 1.

Afterward, TCRn counts down along with the count clock.

When TCRn has become 0000H, INTTMn is output and TOn is toggled upon the next count clock. TCRn loads the value of TDRn again at the same timing. Similar operation is continued hereafter.

A carrier period is generated in two periods of the master channel count.

The count operation of the slave channel is controlled by defining the first period of the master channel as a down status of the slave channel and the second period as an up status of the slave channel.

TOn of the master channel outputs up and down statuses.

TOn of the TO0 register must be manipulated while TOEn of the TOE0 register is 0 and the default level must be set, because up and down statuses are output.

TOn of the TO0 register is set to 1 when MDn0 of the TMRn register is 0, and TOn is set to 0 when MDn0 is 1.

By setting the default level, a high level is output from TO00 during a down status and a low level is output during an up status.

Remark n = 00, 04
p = 02, 06
q = 03, 07

Slave channels 1 and 5 are not used as PWM output functions with dead times.

Dead time is controlled by using slave channel p (p = 2, 6) and slave channel q (q = 3, 7) in combination. The triangular wave PWM output function with dead time uses master channel 0, slave channel 2, and slave channel 3, and master channel 4, slave channel 6, and slave channel 7 in combination.

TCRp of slave channel p operates in the up and down count mode, and counts the duty. TCRp loads the value of TDRp at the first count clock, after the channel start trigger bit (TSp) is set to 1. Hereafter, counting up and counting down is switched in accordance with the operation of the master channel. INTTMp is output when TCRp becomes 0001H.

TCRp loads the value of TDRp again when INTTMn is generated in an up status of the master channel. Similar operation is continued hereafter.

TCRq of slave channels 3, 7 operates in the one-count mode, and counts the dead time.

TCRq loads the value of TDRq and counts down by using count start timing and INTTMp of slave channels 2, 6 as the start trigger. When TCRq becomes 0000H, it outputs INTTMq and stops counting until the next start trigger is input (INTTMp of slave channels 2, 6). INTTMq of slave channels 3, 7 cannot be used, because the number of times it occurs within the carrier cycle period cannot be specified (0 to 3 times).

A triangular wave modulation PWM waveform with dead time is output by changing TOp and TOq by the count operation (INTTMp, INTTMq) of slave channels 2, 6 (duty) and slave channels 3, 7 (dead time). A positive-phase waveform and a reverse-phase waveform are output by controlling the TOLp and TOLq bits of the TOL0 registers of slave channels 2, 6 and slave channels 3, 7.

It is also possible to specify whether to add dead time to the positive logic output or the inverted logic output by setting TOLp and TOLq. When TOLp or TOLq is set to 0, a positive-phase waveform to which dead time has been added on the positive logic side of the PWM duty is output. When TOLp or TOLq is set to 1, a reverse-phase waveform to which dead time has been added on the inverted logic side of the PWM duty is output (TOLq = 1 when TOLp = 0, and TOLq = 0 when TOLp = 1).

Note that the active level of TOp and TOq can be changed by setting the TLS2, TLS3, TLS6, and TLS7 bits of the OPMR register.

The set condition of TOp (TOLp = 0) is the generation of INTTMq by the operation of slave channels 3, 7, which uses the generation of INTTMp while the TCRp register counts down as the start trigger. The reset condition of TOp (TOLp = 0) is the generation of INTTMp of slave channels 2, 6 while TCRp counts up.

The set condition of TOq (TOLq = 1) is the generation of INTTMp while the TCRp register counts down. The reset condition of TOq (TOLq = 0) is the generation of INTTMq by the operation of slave channels 3, 7, which uses the generation of INTTMp while TCRp counts down as the start trigger.

If the set conditions and reset conditions of TOp and TOq conflict, the set conditions take precedence.

The PWM waveform with dead time can be switched between positive and negative phases for slave channels 2, 6 and 3, 7 by setting TOLp and TOLq.

Cautions 1. TDRn of master channel n must be rewritten during an up status period of slave channels 2, 6 (The count status is judged by CSF (TSRp register) of the slave channel or the TOn output level of the master channel). When the value of TDRn is rewritten during a down status period, the periods of the down status and up status differ and an expected waveform cannot be output, because the value of TDRn of the rewritten master channel becomes valid at the next period.

2. TSn, TSp, or TSq cannot be set to “1” (forcible restart) while TEn = 1, TEp = 1, or TEq = 1. If TSn, TSp, or TSq is set to “1” while TEn = 1, TEp = 1, or TEq = 1, the counter value (TCRn, TCRp, or TCRq) will be illegal and TOn, TOp, or TOq will not be able to output the expected waveform.

The value of TDRp of slave channels 2, 6 becomes valid from the next carrier period (up and down trigger detection).

The value of TDRq of slave channels 3, 7 becomes valid from the next start timing (dead time control trigger detection).

Rewriting TDRq of slave channels 3, 7 is recommended to be performed after INTTMp detection of slave channels 2, 6 during an up status period.

Figure 7-33. Block Diagram of Operation as Triangular Wave PWM Output Function with Dead Time

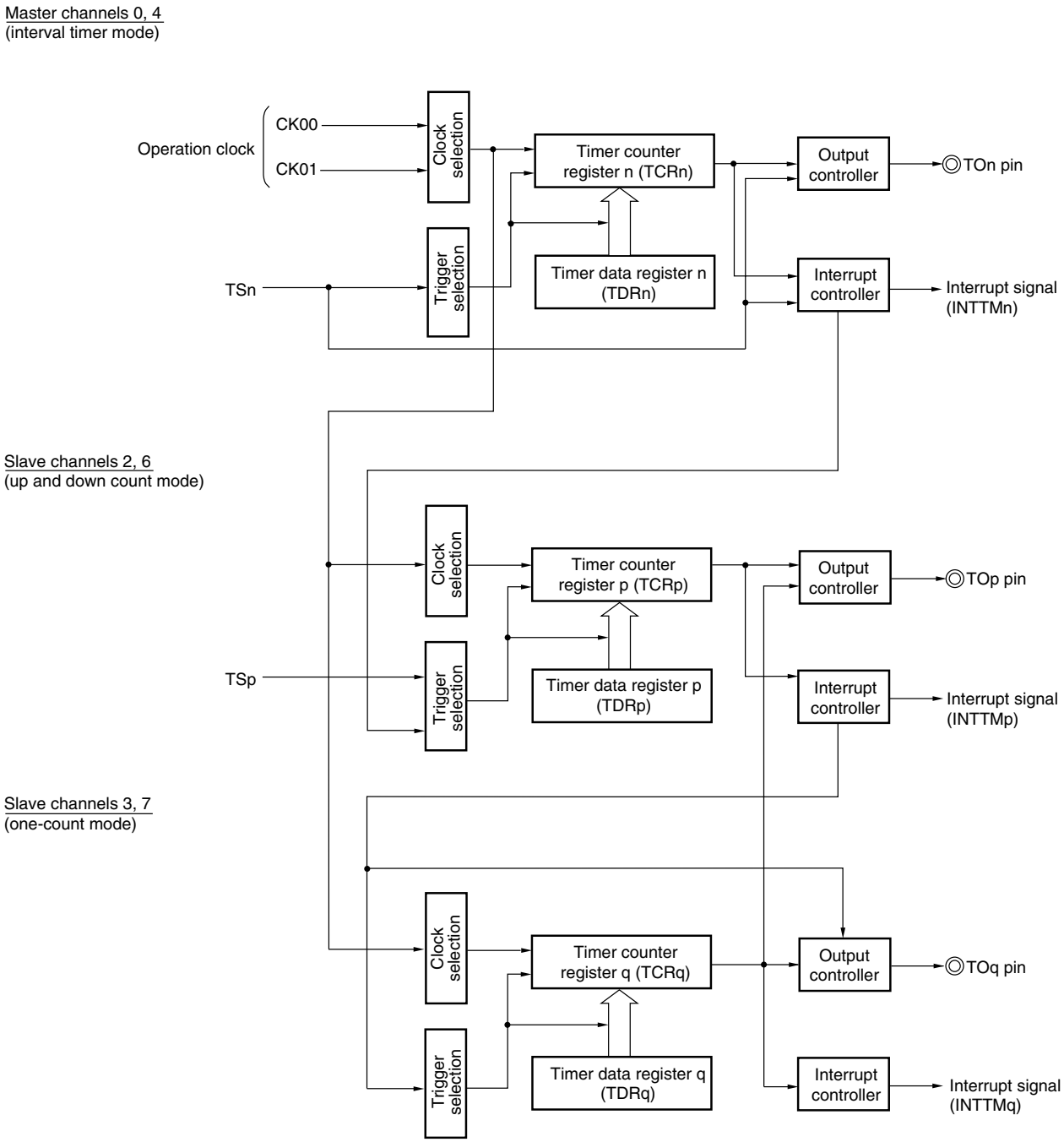

Remark n = 00, 04
p = 02, 06
q = 03, 07

Figure 7-34. Example of Basic Timing of Operation as Triangular Wave PWM Output Function with Dead Time (Default setting : TOn, TOp = 0, TOq = 1, MDn0 = 1)

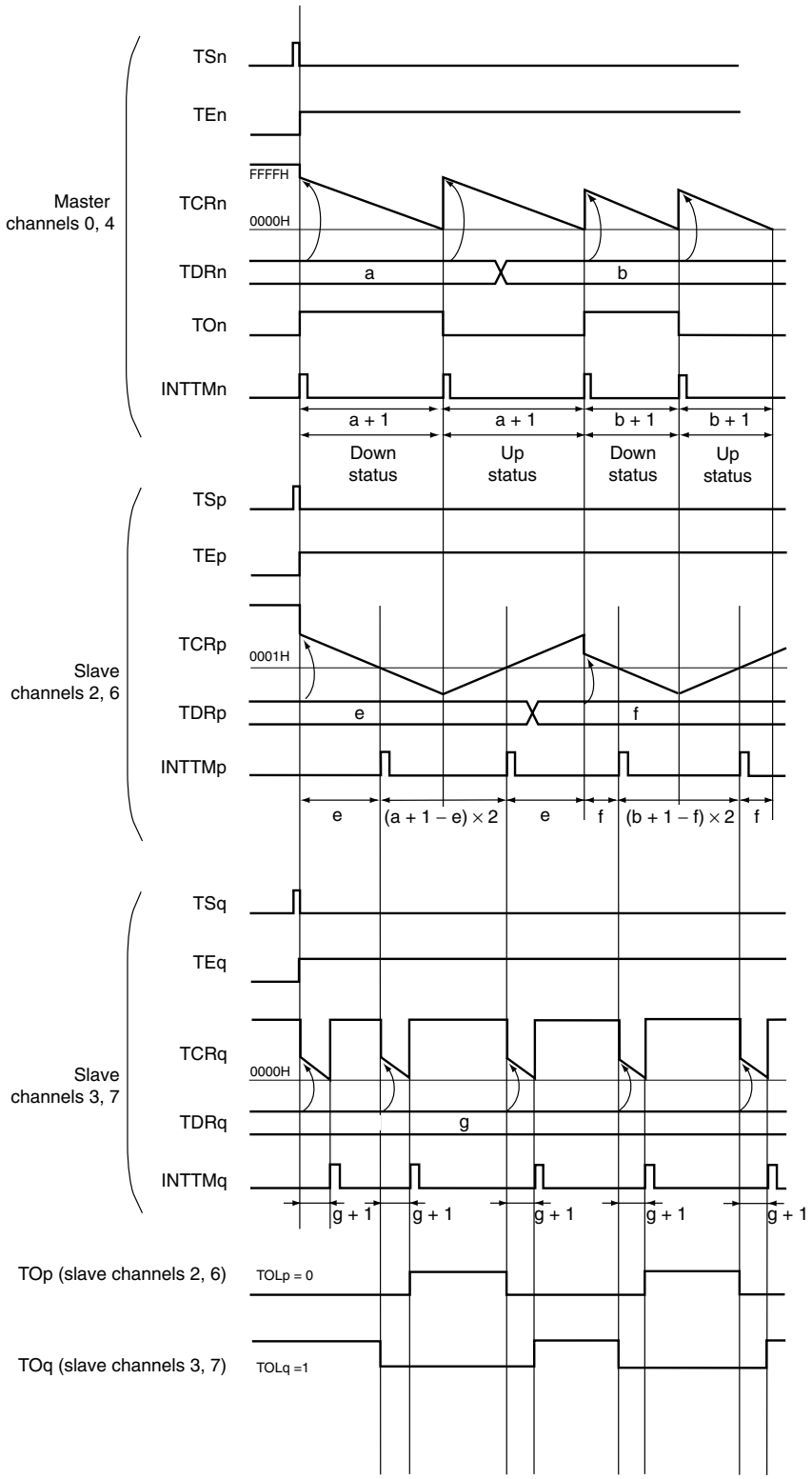

Remark n = 00, 04
p = 02, 06
q = 03, 07

Figure 7-35. Example of Set Contents of Registers When Triangular Wave PWM Output Function with Dead Time (Master Channels 0, 4) Is Used

(a) Timer mode register n (TMRn)

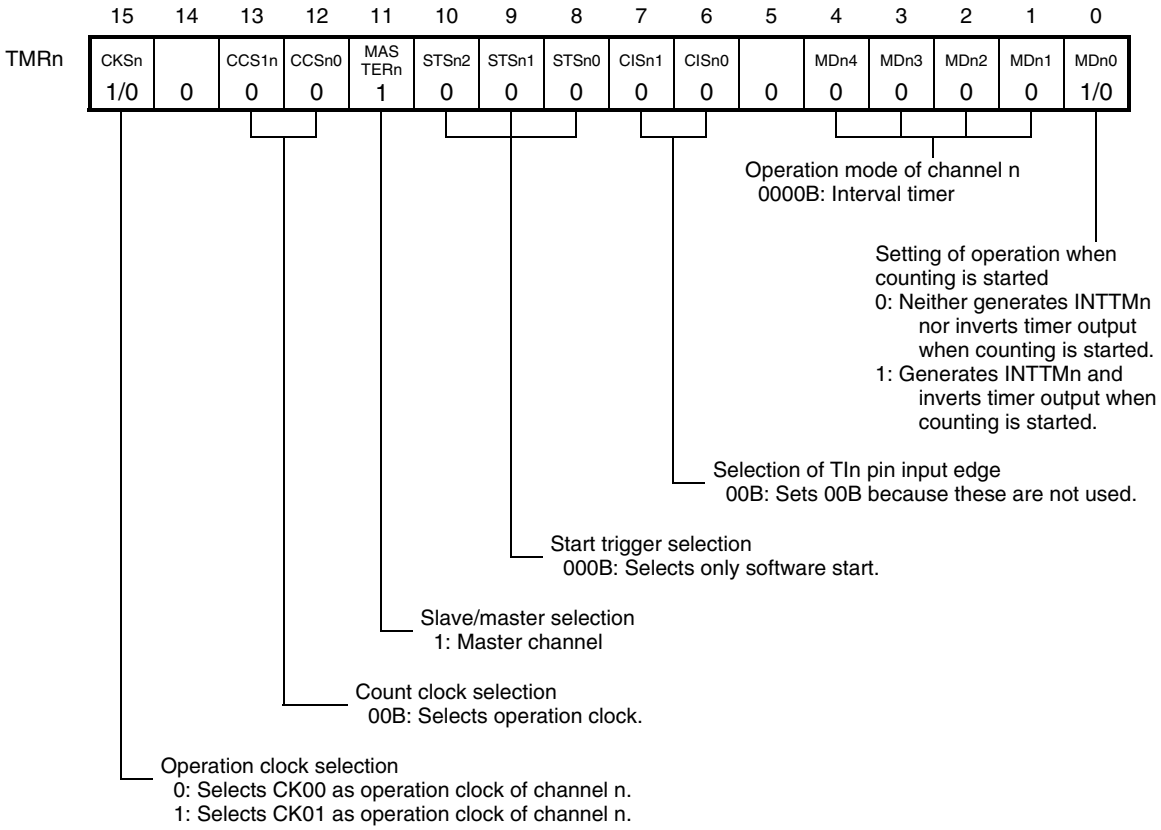

(b) Other registers

TOE0:TOEn Note 1	0: Stops the TOn output operation by counting operation. 1: Enables the TOn output operation by counting operation.
TO0:TOn Note 2	0: Outputs a low level from TOn. 1: Outputs a high level from TOn.
TOM0:TOMn	0: Sets master channel output mode.
TOT0:TOTn	0: Sets 0 when TOMn = 0 (master channel output mode).
TOL0:TOLn	0: Sets 0 when TOMn = 0 (master channel output mode).
TDE0:TDEn	0: Stops dead time control.
TRE0:TREn	0: Stops real-time output.
TRO0:TROn	0: Sets 0 when TREn = 0 (stops real-time output).
TRC0:TRCn	0: Does not operate as the real-time output trigger generation channel.
TME0:TMEn	0: Stops modulated output.

Notes 1. Set TOEn of the master channel to “1” in the following cases.
- When an INTTMM0, INTTMV0, INTTMM1, or INTTMV1 interrupt signal is used
- When Hi-Z output is controlled or an A/D conversion trigger is selected via control by using the OPMR, OPHS, OPHT, and OPCR registers

2. When MDn0 = 1, TOn = 0,
When MDn0 = 0, TOn = 1

Remark n = 00, 04

Figure 7-36. Example of Set Contents of Registers When Triangular Wave PWM Output Function with Dead Time (Slave Channels 2, 6) Is Used

(a) Timer mode register p (TMRp)

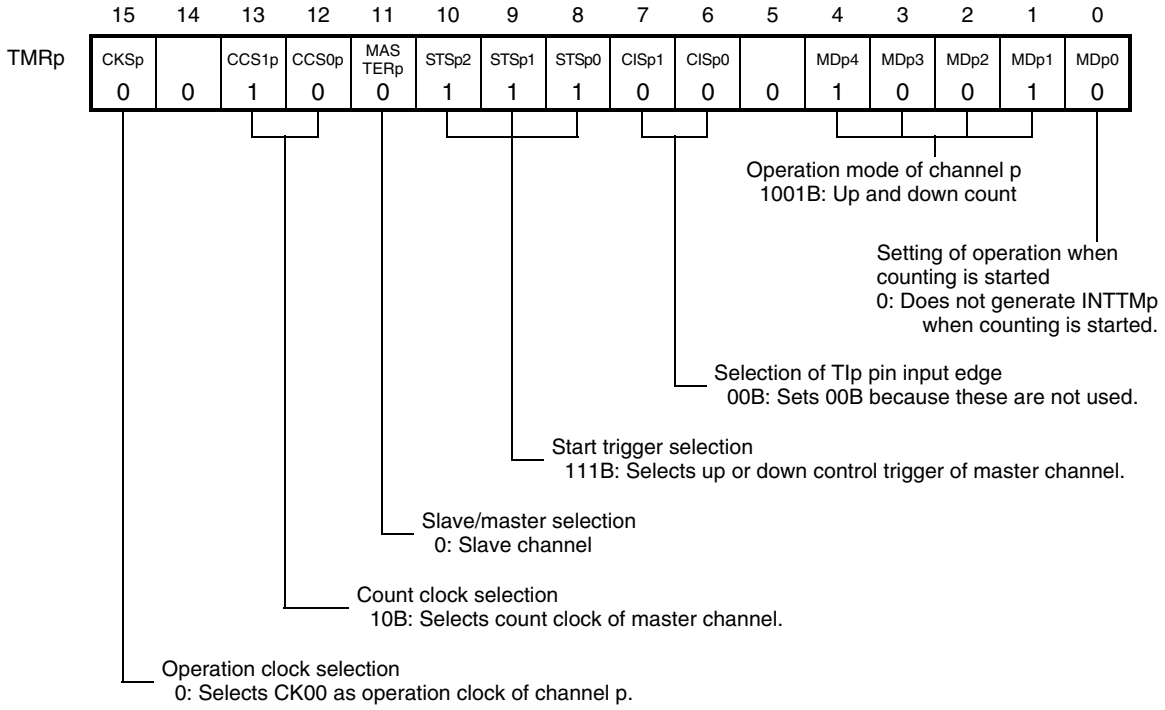

(b) Other registers

TOE0:TOEp	0: Stops the TOp output operation by counting operation. 1: Enables the TOp output operation by counting operation.
TO0:TOp	0: Outputs a low level from TOp. 1: Outputs a high level from TOp.
TOM0:TOMp	1: Sets slave channel output mode.
TOT0:TOTp	1: Generates triangular wave PWM output.
TOL0:TOLp	0: Positive logic output (active-high) 1: Inverted output (active-low)
TDE0:TDEp	1: Enables dead time control.
TRE0:TREp	0: Stops real-time output.
TRO0:TROp	0: Sets 0 when TREp = 0 (stops real-time output).
TRC0:TRCp	0: Does not operate as the real-time output trigger generation channel.
TME0:TMEp	0: Stops modulated output.

Remark p = 02, 06

Figure 7-37. Example of Set Contents of Registers When Triangular Wave PWM Output Function with Dead Time (Slave Channels 3, 7) Is Used

(a) Timer mode register q (TMRq)

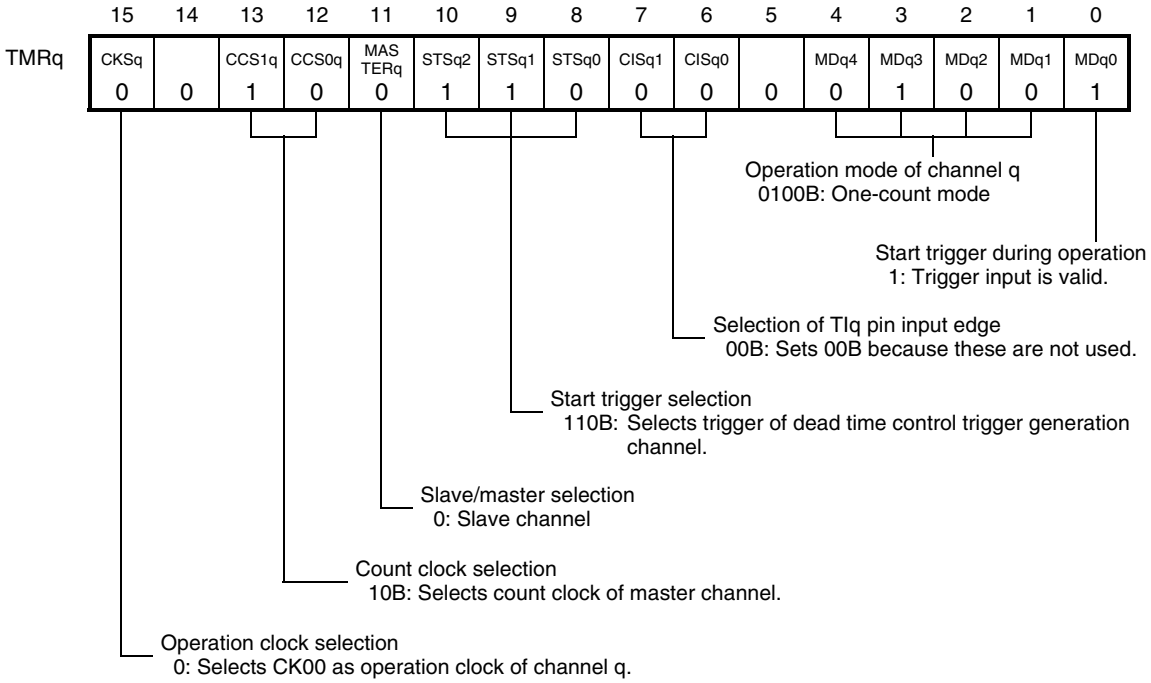

(b) Other registers

TOE0:TOEq	0: Stops the TOq output operation by counting operation. 1: Enables the TOq output operation by counting operation.
TO0:TOq	0: Outputs a low level from TOq. 1: Outputs a high level from TOq.
TOM0:TOMq	1: Sets slave channel output mode.
TOT0:TOTq	1: Generates triangular wave PWM.
TOL0:TOLq	0: Positive logic output (active-high) 1: Inverted output (active-low)
TDE0:TDEq	1: Enables dead time control.
TRE0:TREq	0: Stops real-time output.
TRO0:TROq	0: Sets 0 when TREq = 0 (stops real-time output).
TRC0:TRCq	0: Does not operate as the real-time output trigger generation channel.
TME0:TMEq	0: Stops modulated output.

Remark q = 03, 07

Figure 7-38. Operation Procedure When Triangular Wave PWM Output Function with Dead Time Is Used (1/2)

	Software Operation	Hardware Status
TAUS default setting		Power-off status (Clock supply is stopped and writing to each register is disabled.)
	Sets the TAU0EN and TAUOPEN bits of the PER2 register to 1. →	Power-on status. Each channel stops operating. (Clock supply is started and writing to each register is enabled.)
	Sets the TPS0 register. Determines the clock frequencies of CK00 and CK01.	
Channel default setting	Sets the TMRn, TMRp, and TMRq registers of four channels to be used (determines operation mode of channels). An interval (period) value is set to the TDRn register of the master channel, a duty factor is set to the TDRp register of slave channels 2, 6, and a dead time width is set to the TDRq register of slave channels 3, 7.	Channel stops operating. (Clock is supplied and some power is consumed.) The TO00, TOp, and TOq pins go into Hi-Z output states.
	Sets slave channels. The TOMp and TOMq bits of the TOM0 register, and the TOTp and TOTq bits of the TOT0 register are set to 1 (triangular wave PWM generation). Sets the TOLp and TOLq bits, and determines the active levels of the TOp and TOq outputs. Sets the TDEp and TDEq bits to 1 (dead time control enable).	
	Sets the TOn, TOp, and TOq bits, and determines default levels of TOn, TOp, and TOq. →	The TOn, TOp, and TOq default setting levels are output when the port mode register is in output mode and the port register is 0.
	Sets the TOEn, TOEp, and TOEq bits to 1 and enables operation of TOn, TOp, and TOq. →	TOn, TOp, and TOq do not change because channels stop operating.
	Clears the port register and port mode register to 0. →	The TOn, TOp, and TOq pins output the TOn, TOp, and TOq set levels.
Operation start	Sets the TOEm (master), and TOEp and TOEq (slaves) bits to 1 (only when operation is resumed). The TSn (master), and TSp and TSq (slaves) bits of the TS0 register are set to 1 at the same time. → The TSn, TSp, and TSq bits automatically return to 0 because they are trigger bits.	TEn = 1, TEp = 1, TEq = 1 When the master channel and slave channels 2, 6 start counting, and when the MDn0 bit of the TMRn register is set to 1, INTTMn is generated. Slave channels 3, 7 wait until slave channels 2, 6 detect INTTMp.
During operation	The set value of the TDRn (master) register must be changed during an up status period of slave channels 2, 6. The set values of the TDRp and TDRq (slaves) register can be changed. The TCRn, TCRp, and TCRq registers can always be read. The TSRp (slave) register can always be read.	At the master channel, a period is generated and count operation of slave channels are controlled. A PWM duty is generated at slave channels 2, 6, and dead time is generated at slave channels 3, 7. Triangular wave PWM waveforms with dead times are output from the TOp and TOq pins by a combined operation of slave channels 2, 6 and slave channels 3, 7.

Operation is resumed. (from next page)

Remark n = 00, 04 p = 02, 06 q = 03, 07

Operation is resumed. (to forward page)

Figure 7-38. Operation Procedure When Triangular Wave PWM Output Function with Dead Time Is Used (2/2)

	Software Operation	Hardware Status
Operation stop	The TTn (master), and TTp and TTq (slaves) bits are set to 1 at the same time. The TTn, TTp, and TTq bits automatically return to 0 because they are trigger bits.	TEn, TEp, and TEq = 0, and count operation stops. TCRn, TCRp, and TCRq hold count values and stop. The TOn, TOp, and TOq outputs are not initialized but hold current statuses.
	The TOEn, TOEp, and TOEq bits are cleared to 0 and values are set to the TOn, TOp, and TOq bits.	The TO00, TOp, and TOq pins output the TO00, TOp, and TOq set levels.
TAUS stop	To hold the TOn, TOp, and TOq pin output levels Clears the TOn, TOp, and TOq bits to 0 after the value to be held is set to the port register.	The TOn, TOp, and TOq pin output levels are held by port function.
	When holding the TOn, TOp, and TOq pin output levels is not necessary Switches the port mode register to input mode.	The TOn, TOp, and TOq pin output levels go into Hi-Z output states.
	The TAU0EN and TAUOPEN bits of the PER2 register are cleared to 0.	Power-off status All circuits are initialized and SFR of each channel is also initialized. (The TOn, TOp, and TOq bits are cleared to 0 and the TOn, TOp, and TOq pins are set to port mode.)

Remark n = 00, 04
p = 02, 06
q = 03, 07

7.5.6 Operation as 6-phase triangular wave PWM output function

The 6 triangular wave modulation PWM output function uses seven channels in combination to output a 6-phase triangular wave PWM waveform (with dead time).

The 6-phase triangular wave PWM output function is an extension of the function described in **7.5.5 Operation as triangular wave PWM output function with dead time**.

It outputs 6 triangular wave modulation PWM from slave channel 2, slave channel 3, slave channel 4, slave channel 5, slave channel 6, and slave channel 7. Slave channel 1 can be operated in any operation mode. (With this function, the operation mode of slave channel 1 will not be fixed.)

The output pulse period, positive-phase active width, and reverse-phase active width can be calculated by the following expression.

Pulse period (down/up) = {Set value of TDR00 (master) + 1} × 2 × Count clock period
positive-phase active width = {{{Set value of TDR00 (master) + 1} − {Set value of TDRp (slave p) }} × 2 − {Set value of TDRq (slave q) + 1}} × Count clock period
reverse-phase active width = {{{Set value of TDR00 (master) + 1} − {Set value of TDRp (slave p) }} × 2 + {Set value of TDRq (slave q) + 1}} × Count clock period

Errors will be included in the output waveforms when the dead time function is used. The output width of a positive-phase will be shortened by the amount of dead time, and the output width of a reverse-phase will be extended by the amount of dead time. The linearity of output transition will be lost in the neighborhood of 0% and 100% outputs due to the errors.

0% output: Set value of TDRp (slave p) ≥ Set value of TDR00 (master) + 1
100% output: Set value of TDRp (slave p) = 0000H

The master channel operates in the interval timer mode and counts the periods.

A carrier period is generated in two periods of the master channel count.

The count operation of the slave channel is controlled by defining the first period of the master channel as a down status of the slave channel and the second period as an up status of the slave channel.

TO00 of the master channel outputs up and down statuses.

TO00 of the TO0 register must be manipulated while TOE00 of the TOE0 register is 0 and the default level must be set, because up and down statuses are output.

TO00 of the TO0 register is set to 1 when MD000 of the TMR0 register is 0, and TO00 is set to 0 when MD000 is 1.

By setting the default level, a high level is output from TO00 during a down status and a low level is output during an up status.

Slave channel 1 is not used as a 6-phase PWM output function.

(To use the modulation output function, slave channel 1 is used as the real-time output trigger generation channel. For details of the this function, refer to **7.5.15 Operation as complementary modulation output function**).)

Dead time is controlled by using slave channels 2, 4, 6 and slave channels 3, 5, 7 in combination. The 6-phase triangular wave PWM output function uses slave channels 2 and 3, slave channels 4 and 5, and slave channels 6 and 7 in combination. The output operations of TOp and TOq are explained next.

TCRp of slave channels 2, 4, 6 operate in the up and down count mode, and counts the duty. TCRp loads the value of TDRp at the first count clock, after the channel start trigger bit (TSp) is set to 1. Hereafter, counting up and counting down is switched in accordance with the operation of the master channel. INTTMp is output when TCRp becomes 0001H.

TCRp loads the value of TDRp again when INTTM00 is generated in an up status of the master channel. Similar operation is continued hereafter.

TCRq of slave channels 3, 5, 7 operate in the one-count mode, and counts the dead time.

TCRq loads the value of TDRq and counts down by using count start timing and INTTMp of slave channels 2, 4, 6 as the start trigger. When TCRq becomes 0000H, it outputs INTTMq and stops counting until the next start trigger is input (INTTMq of slave channels 3, 5, 7). INTTMq of slave channels 3, 5, 7 cannot be used, because the number of times it occurs within the carrier cycle period cannot be specified (0 to 3 times).

A 6 triangular wave modulation PWM waveform is output by changing TOp and TOq by the count operations (INTTMp, INTTMq) of slave channels 2, 4, 6 (duty) and slave channels 3, 5, 7 (dead time). A positive-phase waveform and a reverse-phase waveform are output by controlling the TOLp and TOLq bits of the TOL0 registers of slave channels 2, 4, 6 and slave channels 3, 5, 7.

It is also possible to specify whether to add dead time to the positive logic output or the inverted logic output by setting TOLp and TOLq. When TOLp and TOLq are set to 0, a positive-phase waveform to which dead time has been added on the positive logic side of the PWM duty is output. When TOLp and TOLq are set to 1, a reverse-phase waveform to which dead time has been added on the inverted logic side of the PWM duty is output (TOLq = 1 when TOLp = 0, and TOLq = 0 when TOLp = 1).

Note that the active level of TOp and TOq can be changed by setting the TLS2 to TLS7 bits of the OPMR register.

The set condition of TOp (TOLp = 0) is the generation of INTTMq by the operation of slave channels 3, 5, 7, which uses the generation of INTTMp while the TCRp register counts down as the start trigger. The reset condition of TOp (TOLp = 0) is the generation of INTTMp of slave channels 2, 4, 6 while TCRp counts up.

The set condition of TOq (TOLq = 1) is the generation of INTTMp while the TCRp register counts down. The reset condition of TOq (TOLq = 0) is the generation of INTTMq by the operation of slave channels 3, 5, 7, which uses the generation of INTTMp while TCRp counts up as the start trigger.

If the set conditions and reset conditions of TOp and TOq conflict, the set conditions take precedence.

The PWM waveform with dead time can be switched between positive and negative phases for slave channels 2, 4, 6 and 3, 5, 7 by setting TOLp and TOLq.

Cautions 1. TDR00 of the master channel must be rewritten during an up status period of slave channels 2, 4, 6 (The count status is judged by CSF (TSRp register) of the slave channel or the TO00 output level of the master channel). When the value of TDR00 is rewritten during a down status period, the periods of the down status and up status differ and an expected waveform cannot be output, because the value of TDRn of the rewritten master channel becomes valid at the next period.

2. TS00, TSp, or TSq cannot be set to "1" (forcible restart) while TE00 = 1, TEp = 1, or TEq = 1. If TS00, TSp, or TSq is set to "1" while TE00 = 1, TEp = 1, or TEq = 1, the counter value (TCR00, TCRp, or TCRq) will be illegal and TO00, TOp, or TOq will not be able to output the expected waveform.

Remark p = 02, 04, 06
q = 03, 05, 07

The value of TDRp of slave channels 2, 4, 6 becomes valid from the next carrier period (up and down trigger detection).

The value of TDRq of slave channels 3, 5, 7 becomes valid from the next start timing (dead time control trigger detection).

Rewriting TDRq of slave channels 3, 5, 7 is recommended to be performed after INTTMp detection of slave channels 2, 4, 6 during an up status period.

Figure 7-39. Block Diagram of Operation as 6-Phase Triangular Wave PWM Output Function

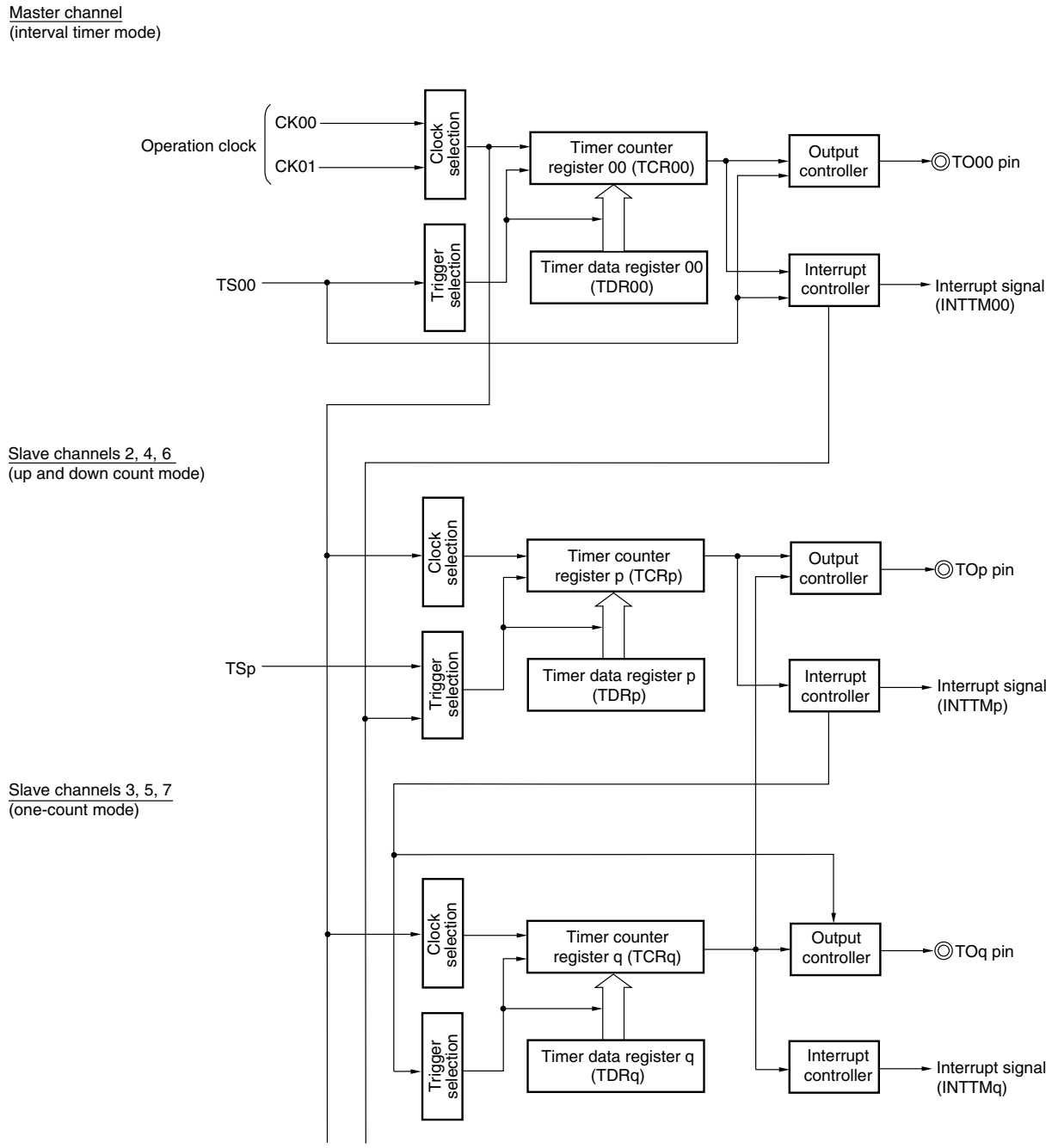

Remark p = 02, 04, 06
q = 03, 05, 07

Figure 7-40. Example of Basic Timing of Operation as 6-Phase Triangular Wave PWM Output Function (Default setting : TO00, TOp = 0, TOq = 1, MDn0 = 1)

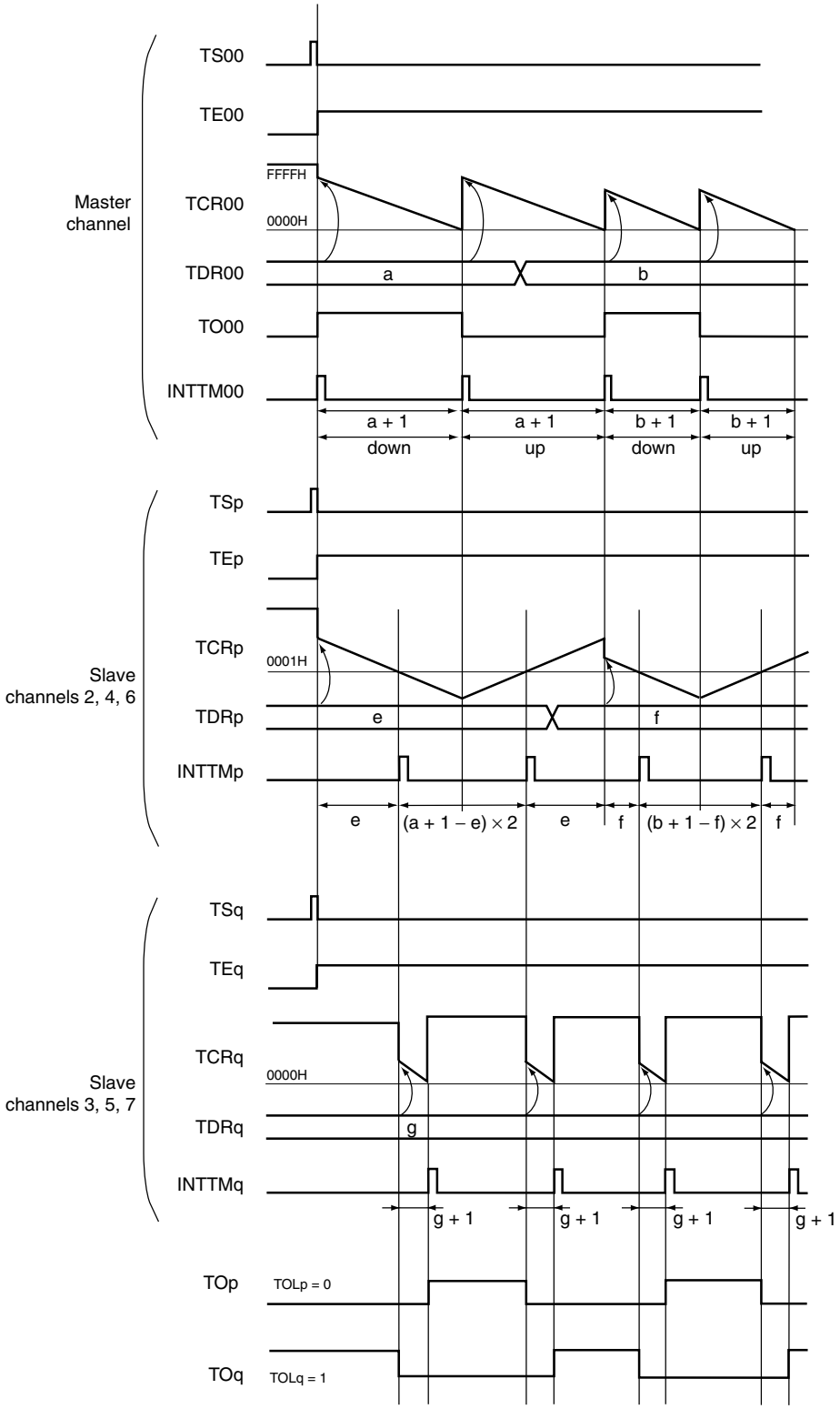

Remark p = 02, 04, 06
q = 03, 05, 07

Figure 7-41. Example of Set Contents of Registers of 6-Phase Triangular Wave PWM Output Function (Master Channel)

(a) Timer mode register 00 (TMR00)

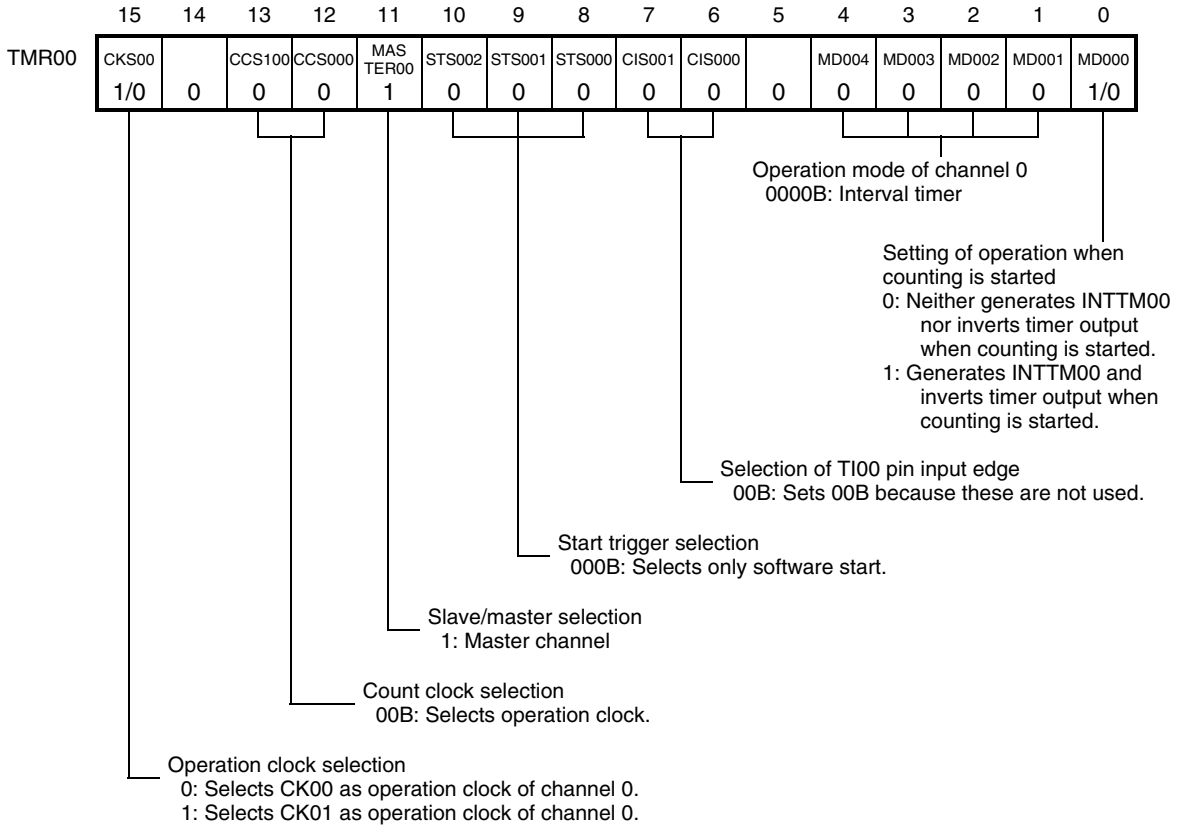

(b) Other registers

TOE0:TOE00[Note 1]	0: Stops the TO00 output operation by counting operation. 1: Enables the TO00 output operation by counting operation.
TO0:TO00[Note 2]	0: Outputs a low level from TO00. 1: Outputs a high level from TO00.
TOM0:TOM00	0: Sets master channel output mode.
TOT0:TOT00	0: Sets 0 when TOM00 = 0 (master channel output mode).
TOL0:TOL00	0: Sets 0 when TOM00 = 0 (master channel output mode).
TDE0:TDE00	0: Stops dead time control.
TRE0:TRE00	0: Stops real-time output.
TRO0:TRO00	0: Sets 0 when TRE00 = 0 (stops real-time output).
TRC0:TRC00	0: Does not operate as the real-time output trigger generation channel.
TME0:TME00	0: Stops modulated output.

Notes 1. Set TOE00 of the master channel to “1” in the following cases.
- When an INTTMM0, INTTMV0, INTTMM1, or INTTMV1 interrupt signal is used
- When Hi-Z output is controlled or an A/D conversion trigger is selected via control by using the OPMR, OPHS, OPHT, and OPCR registers

2. When MD000 = 1, TO00 is set to 0.
When MD000 = 0, TO00 is set to 1

Figure 7-42. Example of Set Contents of Registers of 6-Phase Triangular Wave PWM Output Function (Slave Channels 2, 4, 6)

(a) Timer mode register p (TMRp)

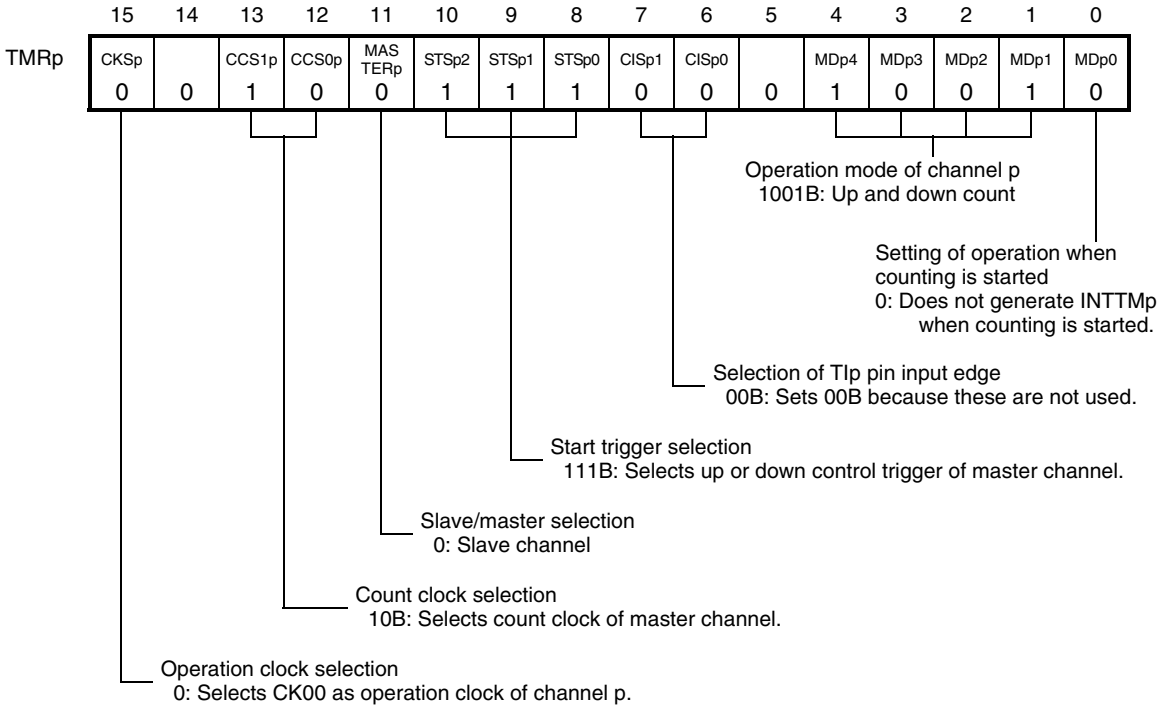

(b) Other registers

TOE0:TOEp	0: Stops the TOp output operation by counting operation. 1: Enables the TOp output operation by counting operation.
TO0:TOp	0: Outputs a low level from TOp. 1: Outputs a high level from TOp.
TOM0:TOMp	1: Sets slave channel output mode.
TOT0:TOTp	1: Sets triangular wave PWM output.
TOL0:TOLp	0: Positive logic output (active-high) 1: Inverted output (active-low)
TDE0:TDEp	1: Enables dead time control.
TRE0:TREp	0: Stops real-time output.
TRO0:TROp	0: Sets 0 when TREp = 0 (stops real-time output).
TRC0:TRCp	0: Does not operate as the real-time output trigger generation channel.
TME0:TMEp	0: Stops modulated output.

Remark p = 02, 04, 06

Figure 7-43. Example of Set Contents of Registers of 6-Phase Triangular Wave PWM Output Function (Slave Channels 3, 5, 7)

(a) Timer mode register q (TMRq)

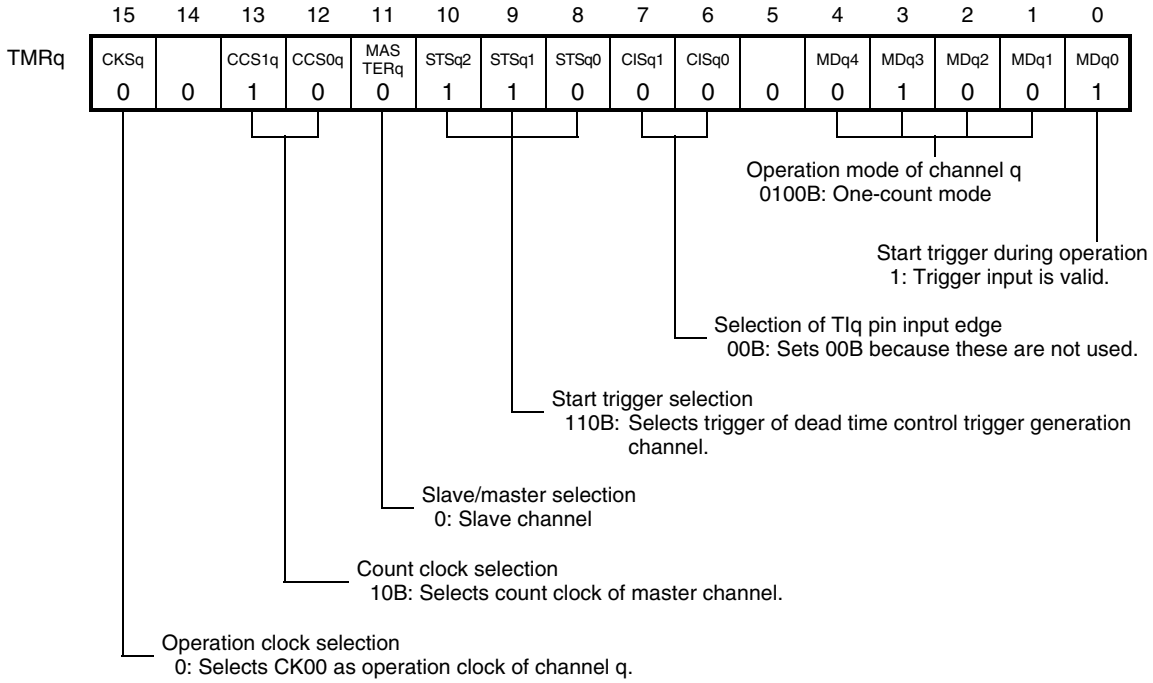

(b) Other registers

TOE0:TOEq	0: Stops the TOq output operation by counting operation. 1: Enables the TOq output operation by counting operation.
TO0:TOq	0: Outputs a low level from TOq. 1: Outputs a high level from TOq.
TOM0:TOMq	1: Sets slave channel output mode.
TOT0:TOTq	1: Sets triangular wave PWM output.
TOL0:TOLq	0: Positive logic output (active-high) 1: Inverted output (active-low)
TDE0:TDEq	1: Enables dead time control.
TRE0:TREq	0: Stops real-time output.
TRO0:TROq	0: Sets 0 when TREq = 0 (stops real-time output).
TRC0:TRCq	0: Does not operate as the real-time output trigger generation channel.
TME0:TMEq	0: Stops modulated output.

Remark q = 03, 05, 07

Figure 7-44. Operation Procedure When 6-Phase Triangular Wave PWM Output Function Is Used (1/2)

	Software Operation	Hardware Status
TAUS default setting		Power-off status (Clock supply is stopped and writing to each register is disabled.)
	Sets the TAU0EN and TAUOPEN bits of the PER2 register to 1. →	Power-on status. Each channel stops operating. (Clock supply is started and writing to each register is enabled.)
	Sets the TPS0 register. Determines clock frequencies of CK00 and CK01.	
Channel default setting	Sets the TMR00, TMRp, and TMRq registers of the channels to be used (determines operation mode of channels). An interval (period) value is set to the TDR00 register of the master channel, a duty factor is set to the TDRp register of slave channels 2, 4, 6, and a dead time width is set to the TDRq register of slave channels 3, 5, 7.	Channel stops operating. (Clock is supplied and some power is consumed.) The TO00, TOp, and TOq pins go into Hi-Z output states.
	Sets slave channels p and q. The TOMp and TOMq bits of the TOM0 register, and the TOTp and TOTq bits of the TOT0 register are set to 1 (triangular wave PWM output). Sets the TOLp and TOLq bits, and determines the active levels of TOp and TOq. Sets the TDEp and TDEq bits of the TDE0 register to 1 (dead time control enable).	
	Sets the TO00, TOp, and TOq bits, and determines default levels of TO00, TOp, and TOq. →	The TO00, TOp, and TOq default setting levels are output when the port mode register is in output mode and the port register is 0.
	Sets the TOE00, TOEp, and TOEq bits to 1 and enables operation of TO00, TOp and TOq. →	TO00, TOp, and TOq do not change because channels stop operating.
	Clears the port register and port mode register to 0. →	The TO00, TOp, and TOq pins output the TOp and TOq set levels.
Operation start	Sets the TOE00 (master), and TOEp and TOEq (slaves) bits to 1 (only when operation is resumed). The TS00 (master), and TSp and TSq (slaves) bits of the TS0 register are set to 1 at the same time. The TS00, TSp,and TSq bits automatically return to 0 because they are trigger bits. →	TE00 = 1, TEp = 1, TEq = 1 When the master channel and slave channels 3, 5, 7 start counting, and when the MD000 bit of the TMR00 register is set to 1, INTTM00 is generated.
During operation	The set value of the TDR00 (master) register must be changed during an up status period. The set values of the TDRp and TDRq (slaves) register can be changed. The TCR00, TCRp, and TCRq registers can always be read. The TSRp (slave) register can always be read.	At the master channel, a period is generated and count operation of slave channels are controlled. A PWM duty is generated at slave channels 2, 4, 6, and dead time is generated at slave channels 3, 5, 7. Triangular wave PWM waveforms with dead times are output from the TOp and TOq pins by a combined operation of slave channels 2, 4, 6 and slave channels 3, 5, 7.

Operation is resumed. (from next page)

Remark p = 02, 04, 06
q = 03, 05, 07

Operation is resumed. (to forward page)

Figure 7-44. Operation Procedure When 6-Phase Triangular Wave PWM Output Function Is Used (2/2)

	Software Operation	Hardware Status
Operation stop	The TT00 (master), and TTp and TTq (slaves) bits are set to 1 at the same time. →	TE00, TEp, and TEq = 0, and count operation stops. TCR00, TCRp, and TCRq hold count values and stop. The TO00, TOp, and TOq outputs are not initialized but hold current statuses.
	The TT00, TTp, and TTq bits automatically return to 0 because they are trigger bits.	
	The TOE00, TOEp, and TOEq bits are cleared to 0 and values are set to the TO00, TOp, and TOq bits. →	The TO00, TOp, and TOq pins output the TO00, TOp, and TOq set levels.
TAUS stop	To hold the TO00, TOp, and TOq pin output levels Clears the TO00, TOp, and TOq bits to 0 after the value to be held is set to the port register. →	The TO00, TOp, and TOq pin output levels are held by port function.
	When holding the TO00, TOp, and TOq pin output levels is not necessary Switches the port mode register to input mode. →	The TO00, TOp, and TOq pin output levels go into Hi-Z output states.
	The TAU0EN and TAUOPEN bits of the PER2 register are cleared to 0. →	Power-off status All circuits are initialized and SFR of each channel is also initialized. (The TO00, TOp, and TOq bits are cleared to 0 and the TO00, TOp, and TOq pins are set to port mode.)

Remark p = 02, 04, 06
q = 03, 05, 07

7.5.7 Interrupt signal thinning function

The interrupt signal thinning function uses two channels in combination to output INTTMm that is INTTMn of the master channel being thinned by the specified number of times from the slave channel.

It assumes the slave channel to be used as a sub-function of the function described in **7.5.6 Operation as 6-phase triangular wave PWM output function**. The setting of the master channel is therefore the same as in **7.5.6 Operation as 6-phase triangular wave PWM output function**. The number of interrupts to be thinned can be calculated by the following expression.

Number of interrupts to be thinned = Set value of TDRm (slave channel) → Outputting INTTMn of the master channel from INTTMm of the slave channel every {Set value of TDRm (slave) + 1} times

TCRn of the master channel counts down in the interval timer mode.

TCRn loads the value of TDRn by setting the channel start trigger bit (TSn) to 1. At this time, INTTMn is not output and TOn is not toggled when MDn0 of TMRn is 0. INTTMn is output and TOn is toggled when MDn0 of TMRn is 1. Afterward, TCRn counts down along with the count clock. When TCRn has become 0000H, INTTMn is output and TOn is toggled upon the next count clock. TCRn loads the value of TDRn again at the same timing. Similar operation is continued hereafter.

The slave channel operates as a down counter in the event counter mode and controls the thinning of INTTMn signals of the master channel.

TCRm loads the value of TDRm by setting the channel start trigger bit (TSm) to 1.

TCRm counts down along with the INTTMn output of the master channel, and loads the value of TDRm again and outputs INTTMm when TCRm becomes 0000H. Similar operation is continued hereafter.

TOn and TOm cannot be used, because TOn and TOm becomes an irregular waveform that depends on external events.

TDRn of the master channel becomes valid from the next start timing (master channel INTTMn generation).

TDRm of the slave channel becomes valid from the next start timing (slave channel INTTMm generation).

Remark n = 00
m = 01

Figure 7-45. Block Diagram of Operation as Interrupt Signal Thinning Function

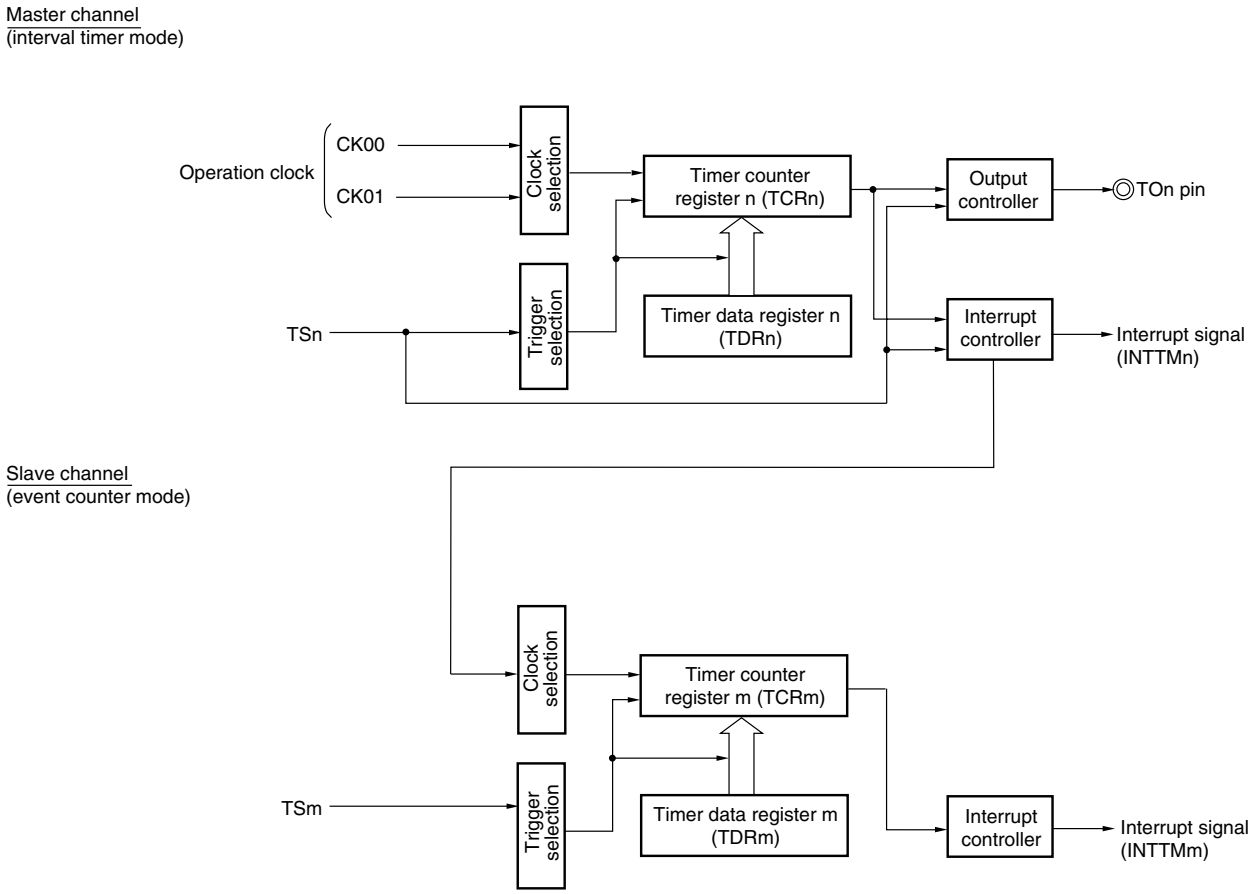

Remark n = 00
m = 01

Figure 7-46. Example of Basic Timing of Operation as Interrupt Signal Thinning Function (Default setting : MDn0 = 1)

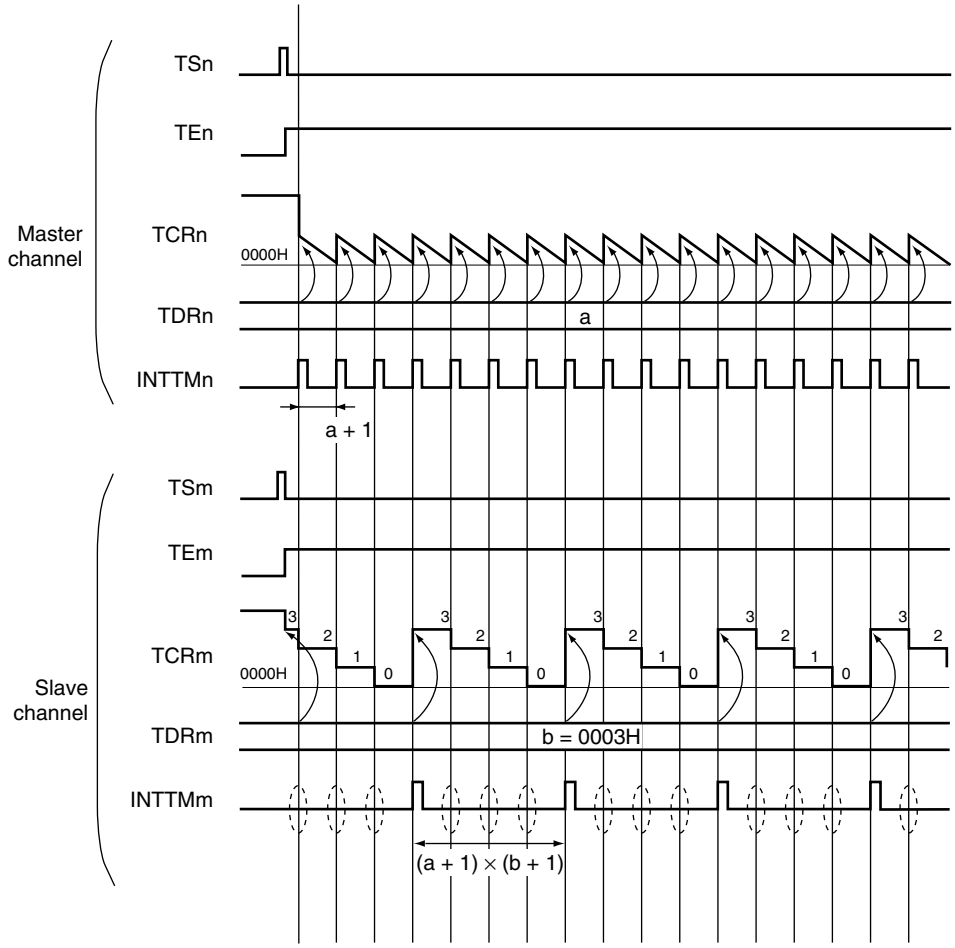

Remark n = 00
m = 01

Figure 7-47. Example of Set Contents of Registers When Interrupt Signal Thinning Function (Master Channel) Is Used

(a) Timer mode register n (TMRn)

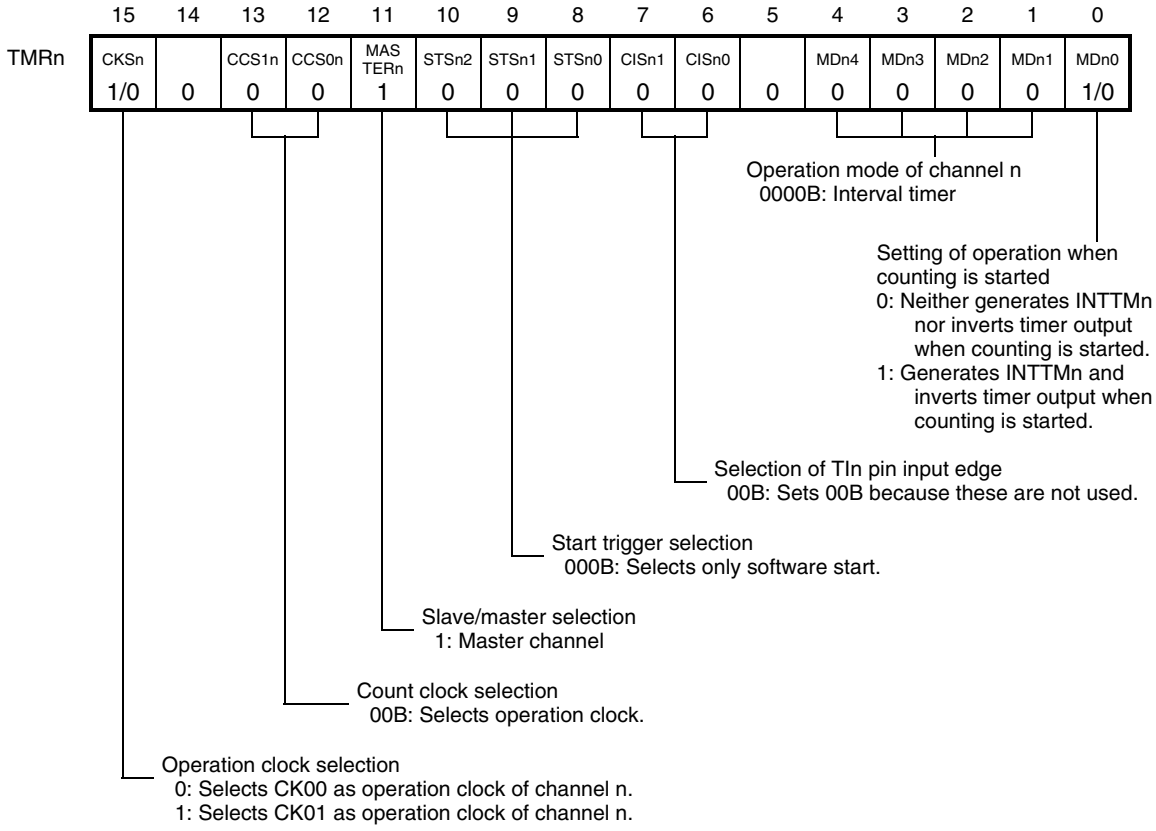

(b) Other registers

TOE0:TOEn	0: Stops the TOn output operation by counting operation. 1: Enables the TO00 output operation by counting operation.
TO0:TOn [Note]	0: Outputs a low level from TOn. 1: Outputs a High level from TO00.
TOM0:TOMn	0: Sets master channel output mode.
TOT0:TOTn	0: Sets 0 when TOMn = 0 (master channel output mode).
TOL0:TOLn	0: Sets 0 when TOMn = 0 (master channel output mode).
TDE0:TDEn	0: Stops dead time control.
TRE0:TREn	0: Stops real-time output.
TRO0:TROn	0: Sets 0 when TREn = 0 (stops real-time output).
TRC0:TRCn	0: Does not operate as the real-time output trigger generation channel.
TME0:TMEn	0: Stops modulated output.

Note When MDn0 = 1, TOn is set to 0.
When MDn0 = 0, TOn is set to 1.

Remark n = 00

Figure 7-48. Example of Set Contents of Registers When Interrupt Signal Thinning Function (Slave Channel) Is Used

(a) Timer mode register m (TMRm)

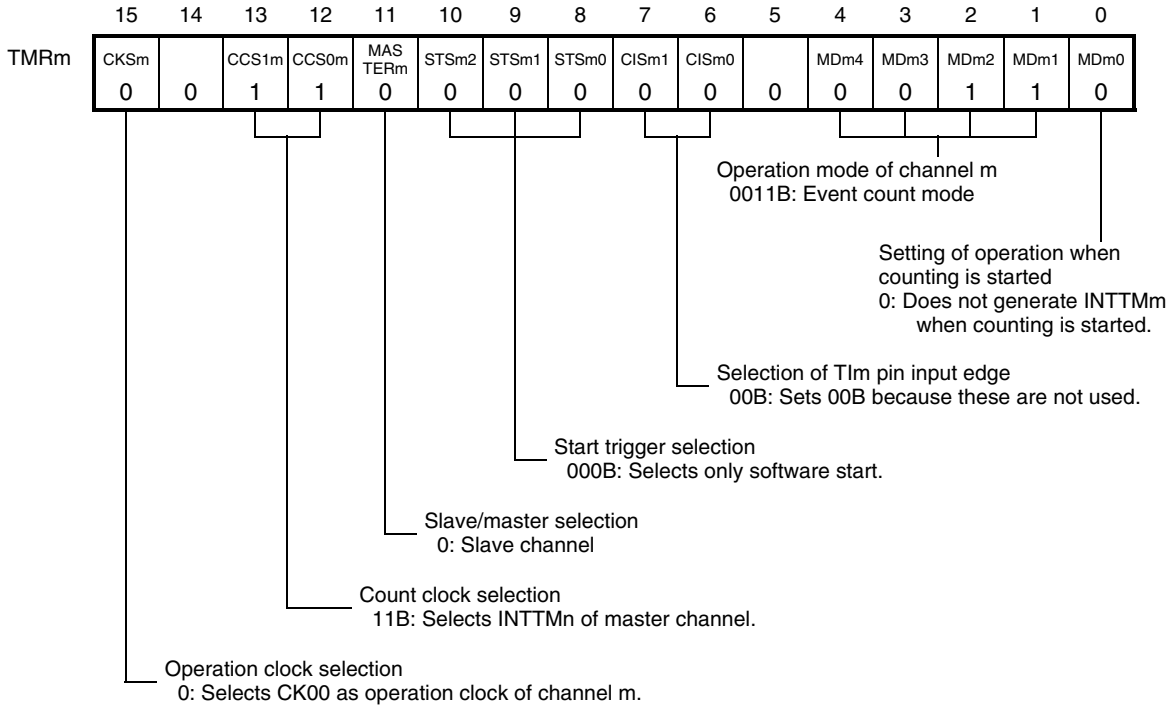

(b) Other registers

TOE0:TOEm	0: Stops the TOm output operation by counting operation.
TO0:TOm	0: Outputs a low level from TOm.
TOM0:TOMm	0: Sets 0 when TOEm = 0 (stops the TOm operation by counting operation).
TOT0:TOTm	0: Sets 0 when TOMm = 0 (master channel output mode).
TOL0:TOLm	0: Sets 0 when TOMm = 0 (master channel output mode).
TDE0:TDEm	0: Stops dead time control.
TRE0:TREm	0: Stops real-time output.
TRO0:TROm	0: Sets 0 when TREm = 0 (stops real-time output).
TRC0:TRCm	0: Does not operate as the real-time output trigger generation channel.
TME0:TMEm	0: Stops modulated output.

Remark n = 00
m = 01

Figure 7-49. Operation Procedure When Interrupt Signal Thinning Function Is Used

	Software Operation	Hardware Status
TAUS default setting		Power-off status (Clock supply is stopped and writing to each register is disabled.)
	Sets the TAU0EN and TAUOPEN bits of the PER2 register to 1. →	Power-on status. Each channel stops operating. (Clock supply is started and writing to each register is enabled.)
	Sets the TPS0 register. Determines clock frequencies of CK00 and CK01.	
Channel default setting	Sets the TMRn and TMRm registers of two channels to be used (determines operation mode of channels). An interval (period) value is set to the TDRn register of the master channel, and the number of interrupts to be thinned is set to the TDRm register of the slave channel.	Channel stops operating. (Clock is supplied and some power is consumed.)
Operation start	Sets the TOEn bit (master channel) to 1 (only when operation is resumed). Sets the TSn (master) and TSm (slave) bits to 1 at the same time. → The TSn and TSm bits automatically return to 0 because they are trigger bits.	TEn = 1, TEm = 1 At the master channel, TCRn loads the value of TDRn by count clock input. INTTMn is generated and TOn is toggled when the MDn0 bit of the TMRn register is 1. At the slave channel, TCRm loads the value of TDRm and enters a state to wait for detection of INTTMn of the master channel.
During operation	The set values of the TDRn and TDRm registers can be changed. The TCRn and TCRm registers can always be read.	The counter (TCRn) of the master channel counts down. When the count value reaches TCRn = 0000H, the value of TDRn is loaded to TCRn again and the count operation is continued. By detecting TCRn = 0000H, INTTMn is generated and TOn performs toggle operation. The counter (TCRm) of the slave channel counts down every time an INTTMn signal of the master channel is detected. When the count value reaches TCRm = 0000H, the value of TDRm is loaded to TCRm again and the count operation is continued. By detecting TCRm = 0000H, INTTMm is generated.
Operation stop	The TTn (master) and TTm (slave) bits are set to 1 at the same time. → The TTn and TTm bits automatically return to 0 because they are trigger bits.	TEn and TEm = 0, and count operation stops. TCRn and TCRm hold count values and stop.
TAUS stop	The TAU0EN and TAUOPEN bits of the PER2 register are cleared to 0. →	Power-off status All circuits are initialized and SFR of each channel is also initialized. (The TOn and TOm bits are cleared to 0 and the TOn and TOm pins are set to port mode.)

Operation is resumed.

7.5.8 Operation as A/D conversion trigger output function (type 1)

The A/D conversion trigger output function uses two channels in combination to output A/D conversion triggers.

It outputs A/D conversion trigger signals from slave channels.

Multiple slave channels can be used to increase the number of A/D conversion trigger outputs.

The A/D conversion trigger output function assumes the master channel to be used as a sub-function of the function described in **7.5.3 Operation as 6-phase PWM output function**. The setting of the master channel is therefore the same as in **7.5.3 Operation as 6-phase PWM output function**. The A/D conversion trigger pulse generation period can be calculated by the following expression.

A/D conversion trigger pulse generation period (interval from the start of the carrier period to INTTMn detection) = {Set value of TDRm (slave) + 1} × Count clock period

TCRn of the master channel operates in the interval timer mode and counts the periods.

TCRm of the slave channel operates in one-count mode and counts the duty. TCRm of the master channel loads the value of TDRm by using INTTMn of the master channel as a start trigger, and counts down. When TCRm has become 0000H, TCRm outputs INTTMm and stops counting until the next start trigger (INTTMn of the master channel) is input.

TDRn and TDRm of the master channel and slave channel become valid from the next period (master channel INTTMn generation).

Cautions 1. TSn or TSm cannot be set to "1" (forcible restart) while TEn = 1 or TEm = 1. If TSn or TSm is set to "1" while TEn = 1 or TEm = 1, the counter value (TCRn or TCRm) will be illegal and TOn or TOm will not be able to output the expected waveform.

2. When using the A/D conversion trigger output function (type 1), set ATS1 to 0 and ATS0 to 1.

Remarks 1. OPM = 0: n = 00, m = 08, 09
OPM = 1: n = 00, 04, m = 01, 05

2. OPM : Bit 15 of TAU option mode register (OPMR)

3. ATS1, ATS0 : Bits 9 and 8 of TAU option mode register (OPMR)

Figure 7-50. Block Diagram of Operation as A/D Conversion Trigger Output Function (Type 1)

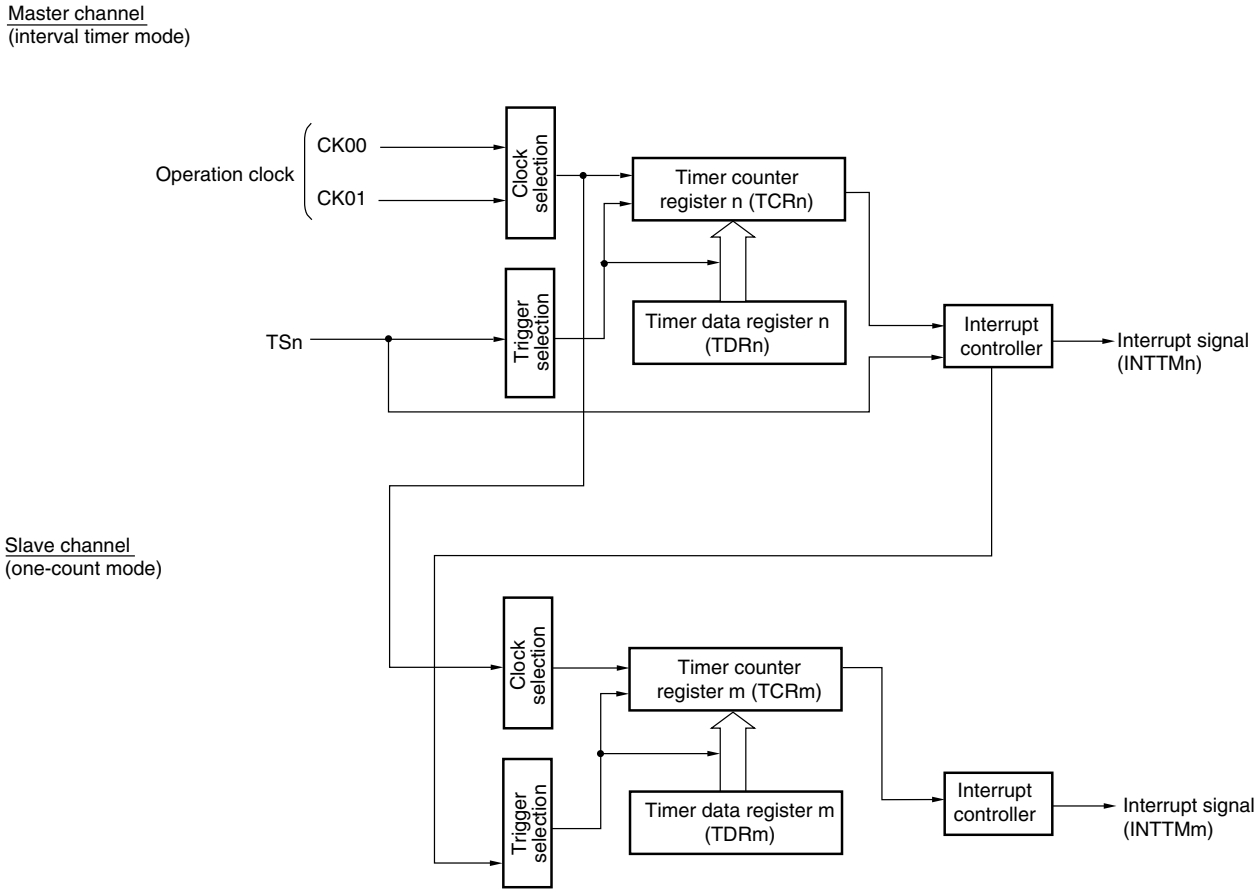

Remarks 1. OPM = 0: n = 00, m = 08, 09
OPM = 1: n = 00, 04, m = 01, 05

2. OPM: Bit 15 of TAU option mode register (OPMR)

Figure 7-51. Example of Basic Timing of Operation as A/D Conversion Trigger Output Function (Type 1)

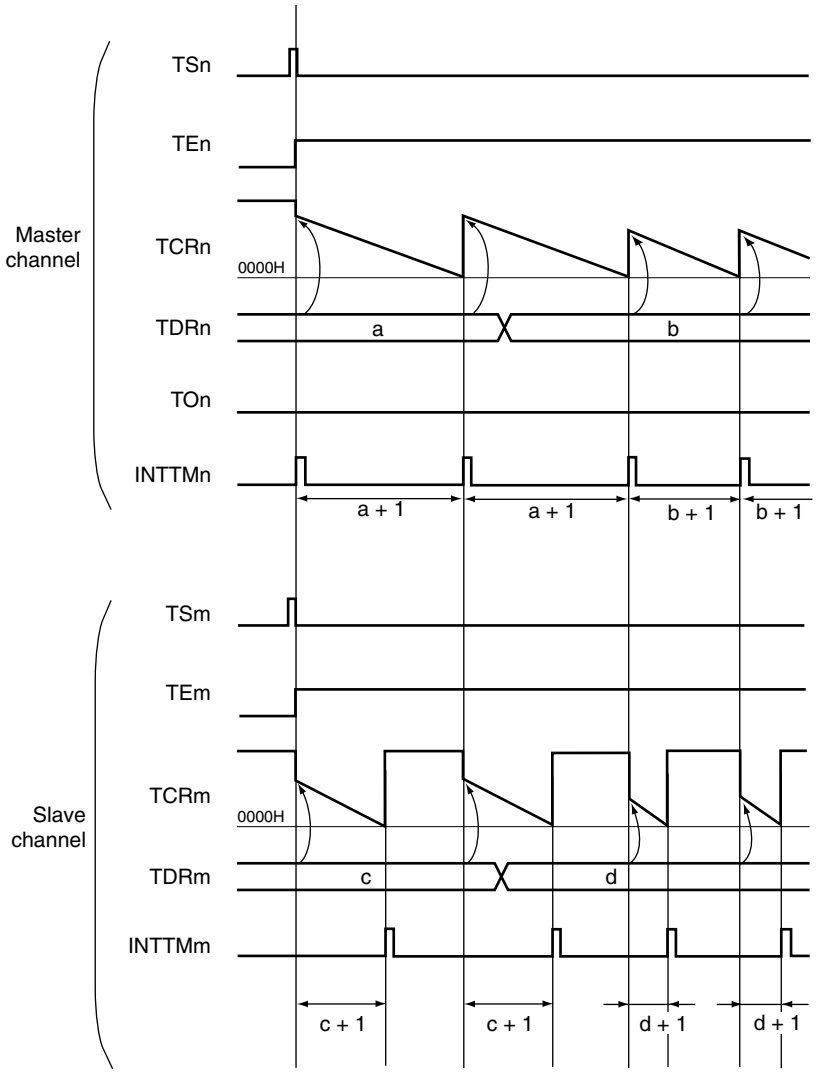

Remarks 1. OPM = 0: n = 00, m = 08, 09
OPM = 1: n = 00, 04, m = 01, 05

2. OPM: Bit 15 of TAU option mode register (OPMR)

Figure 7-52. Example of Set Contents of Registers When A/D Conversion Trigger Output Function (Type 1) (Master Channel) Is Used

(a) Timer mode register n (TMRn)

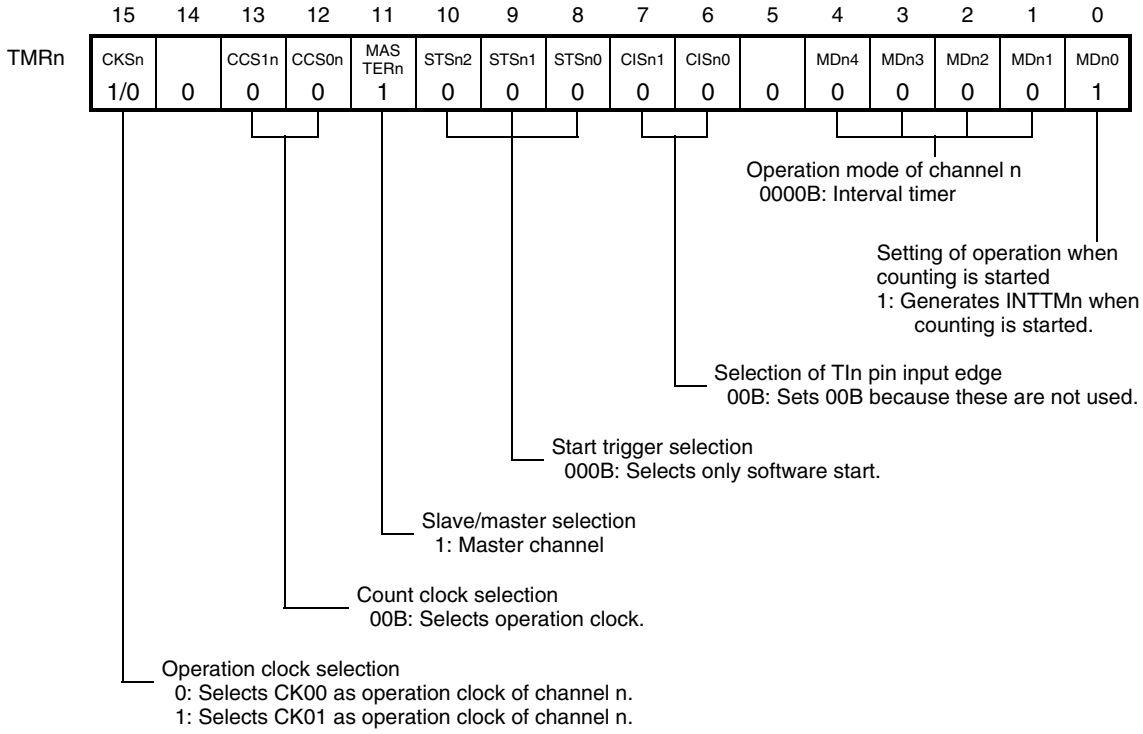

(b) Other registers

TOE0:TOEn	0: Stops the TOn output operation by counting operation. 1: Enables the TOn output operation by counting operation.
TO0:TOn	0: Outputs a low level from TOn. 1: Outputs a high level from TOn.
TOM0:TOMn	0: Sets 0 when TOEn = 0 (stops the TOn output operation by counting operation).
TOT0:TOTn	0: Sets 0 when TOMn = 0 (master channel output mode).
TOL0:TOLn	0: Sets 0 when TOMn = 0 (master channel output mode).
TDE0:TDEn	0: Stops dead time control.
TRE0:TREn	0: Stops real-time output.
TRO0:TROn	0: Sets 0 when TREn = 0 (stops real-time output).
TRC0:TRCn	0: Does not operate as the real-time output trigger generation channel.
TME0:TMEn	0: Stops modulated output.

Remark n = 00, 04

Figure 7-53. Example of Set Contents of Registers When A/D Conversion Trigger Output Function (Type 1) (Slave Channel) Is Used

(a) Timer mode register m (TMRm)

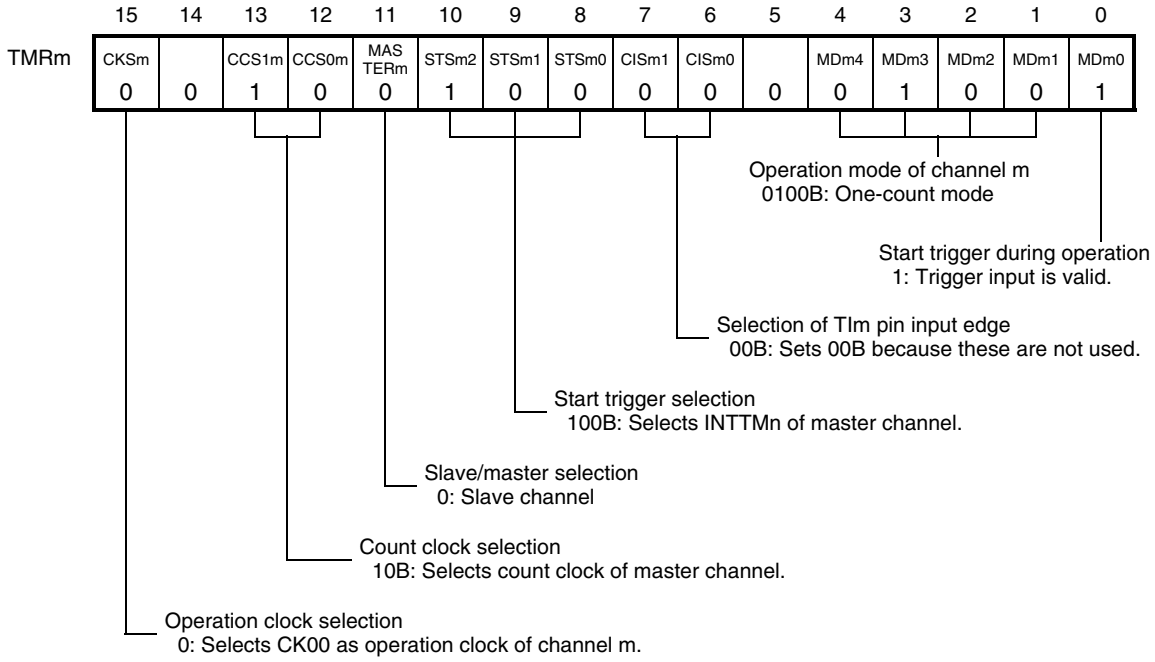

(b) Other registers

TOE0:TOEm	0: Stops the TOm output operation by counting operation.
TO0:TOm	0: Outputs a low level from TOm.
TOM0:TOMm	0: Sets 0 when TOEm = 0 (stops the TOm output operation by counting operation).
TOT0:TOTm	0: Sets 0 when TOMm = 0 (master channel output mode).
TOL0:TOLm	0: Sets 0 when TOMm = 0 (master channel output mode).
TDE0:TDEm	0: Stops dead time control.
TRE0:TREm	0: Stops real-time output.
TRO0:TROm	0: Sets 0 when TREm = 0 (stops real-time output).
TRC0:TRCm	0: Does not operate as the real-time output trigger generation channel.
TME0:TMEm	0: Stops modulated output.

Remarks 1. OPM = 0: n = 00, m = 08, 09
OPM = 1: n = 00, 04, m = 01, 05

2. OPM: Bit 15 of TAU option mode register (OPMR)

Figure 7-54. Operation Procedure When A/D Conversion Trigger Output Function (Type 1) Is Used

	Software Operation	Hardware Status
TAUS default setting		Power-off status (Clock supply is stopped and writing to each register is disabled.)
	Sets the TAU0EN and TAUOPEN bits of the PER2 register to 1. →	Power-on status. Each channel stops operating. (Clock supply is started and writing to each register is enabled.)
	Sets the TPS0 register. Determines clock frequencies of CK00 and CK01.	
Channel default setting	Sets the TMRn and TMRm registers of two channels to be used (determines operation mode of channels). An interval (period) value is set to the TDRn register of the master channel, and a duty factor is set to the TDRm register of the slave channel.	Channel operating. (Clock is supplied and some power is consumed.)
Operation start	Sets the TSn (master) and TSm (slave) bits of the TS0 register to 1 at the same time. → The TSn and TSm bits automatically return to 0 because they are trigger bits.	TEn = 1, TEm = 1 The master channel starts counting and INTTMn is generated. Triggered by this interrupt, the slave channel also starts counting.
During operation	The set values of the TDRn and TDRm registers can be changed after generation of INTTMn of the master channel. The TCRn and TCRm registers can always be read.	At the master channel, TCRn loads the value of TDRn and counts down. When the count value reaches TCRn = 0000H, INTTMn is generated. At the same time, the value of TDRn is loaded to TCRn, and the counter starts counting down again. At the slave channel, the value of the TDRm register is transferred to TCRm, triggered by the INTTMn signal of the master channel, and the counter starts counting down. INTTMm is generated when TCRm = 0000H is detected, and the count operation is stopped. After that, the above operation is repeated.
Operation stop	The TTn (master) and TTm (slave) bits are set to 1 at the same time. → The TTn and TTm bits automatically return to 0 because they are trigger bits.	TEn and TEm = 0, and count operation stops. TCRn and TCRm hold count values and stop.
TAUS stop	The TAU0EN and TAUOPEN bits of the PER2 register are cleared to 0. →	Power-off status All circuits are initialized and SFR of each channel is also initialized.

Operation is resumed.

Remarks 1. OPM = 0: n = 00, m = 08, 09
OPM = 1: n = 00, 04, m = 01, 05

2. OPM: Bit 15 of TAU option mode register (OPMR)

7.5.9 Operation as A/D conversion trigger output function (type 2)

The A/D conversion trigger output function uses two channels in combination to output A/D conversion triggers.

It outputs A/D conversion trigger signals from slave channels.

Multiple slave channels can be used to increase the number of A/D conversion trigger outputs.

The A/D conversion trigger output function assumes the slave channel to be used as a sub-function of the function described in **7.5.6 Operation as 6-phase triangular wave PWM output function**. The setting of the master channel is therefore the same as in **7.5.6 Operation as 6-phase triangular wave PWM output function**. The A/D conversion trigger pulse generation period can be calculated by the following expression.

> A/D conversion trigger pulse generation period (interval from the start of the carrier period to INTTMn detection during a down status) = {Set value of TDRm (slave) + 1} × Count clock period
>
> Setting range of TDRm (slave): 0000H < TDRm (slave) < {Set value of TDRn (master) + 1}
>
> * Interval from INTTMm detection during a down status to INTTMm detection during an up status
> = {{Set value of TDRn (master) + 1} − {Set value of TDRm (slave)}} × 2 × Count clock period

TCRn of the master channel operates in the interval timer mode and counts the periods.

TCRn loads the value of TDRn by setting the channel start trigger bit (TSn) to 1.

Afterward, TCRn counts down along with the count clock. When TCRn has become 0000H, INTTMn is output and TOn is toggled upon the next count clock. TCRn loads the value of TDRn again at the same timing. Similar operation is continued hereafter.

A carrier period is generated in two periods of the master channel count.

The count operation of the slave channel is controlled by defining the first period of the master channel as a down status of the slave channel and the second period as an up status of the slave channel.

TOn of the master channel outputs up and down statuses.

TOn of the TO0 register must be manipulated while TOEn of the TOE0 register is 0 and the default level must be set, because up and down statuses are output.

TOn of the TO0 register is set to 1 when MDn0 of the TMR0 register is 0, and TOn is set to 0 when MDn0 is 1.

By setting the default level, a high level is output from TOn during a down status and a low level is output during an up status.

TCRm of slave channel m operates in the up and down count mode, and counts the duty. TRm loads the value of TDRm at the first count clock, after the channel start trigger bit (TSm) is set to 1. Hereafter, counting up and counting down is switched in accordance with the operation of the master channel. INTTMm is output when TCRm becomes 0001H.

TCRm loads the value of TDRm again when INTTMn is generated in an up status of the master channel. Similar operation is continued hereafter.

Remarks 1. OPM = 0: n = 00, m = 08, 09
OPM = 1: n = 00, 04, m = 01, 05

2. OPM: Bit 15 of TAU option mode register (OPMR)

Cautions 1. TDRn of the master channel must be rewritten during an up status period of slave channel m (The count status is judged by CSF (TSRm register) of the slave channel or the TOn output level of the master channel). When the value of TDRn is rewritten during a down status period, the periods of the down status and up status differ and an expected waveform cannot be output, because the value of TDRn of the rewritten master channel becomes valid at the next period.

2. TSn or TSm cannot be set to "1" (forcible restart) while TEn = 1 or TEm = 1. If TSn or TSm is set to "1" while TEn = 1 or TEm = 1, the counter value (TCRn or TCRm) will be illegal and TOn or TOm will not be able to output the expected waveform.

TDRm of the slave channel becomes valid from the next carrier period (up and down trigger detection).

Also, the timing of generating the A/D conversion trigger signal can be specified as follows by setting the ATS0 to ATS3 bits of the OPMR register.

- The match interrupts during a up status period of the master channel.
- The match interrupts during a down status period of the master channel.
- The match interrupts during an up and a down status period of the master channel.
- The match interrupt and valley interrupt during an up and a down status period of the master channel .

For details, refer to **7.3 (19) TAU option mode register (OPMR)**.

Remarks 1. OPM = 0: n = 00, m = 08, 09
OPM = 1: n = 00, 04, m = 01, 05

2. OPM: Bit 15 of TAU option mode register (OPMR)

Figure 7-55. Block Diagram of Operation as A/D Conversion Trigger Output Function (Type 2)

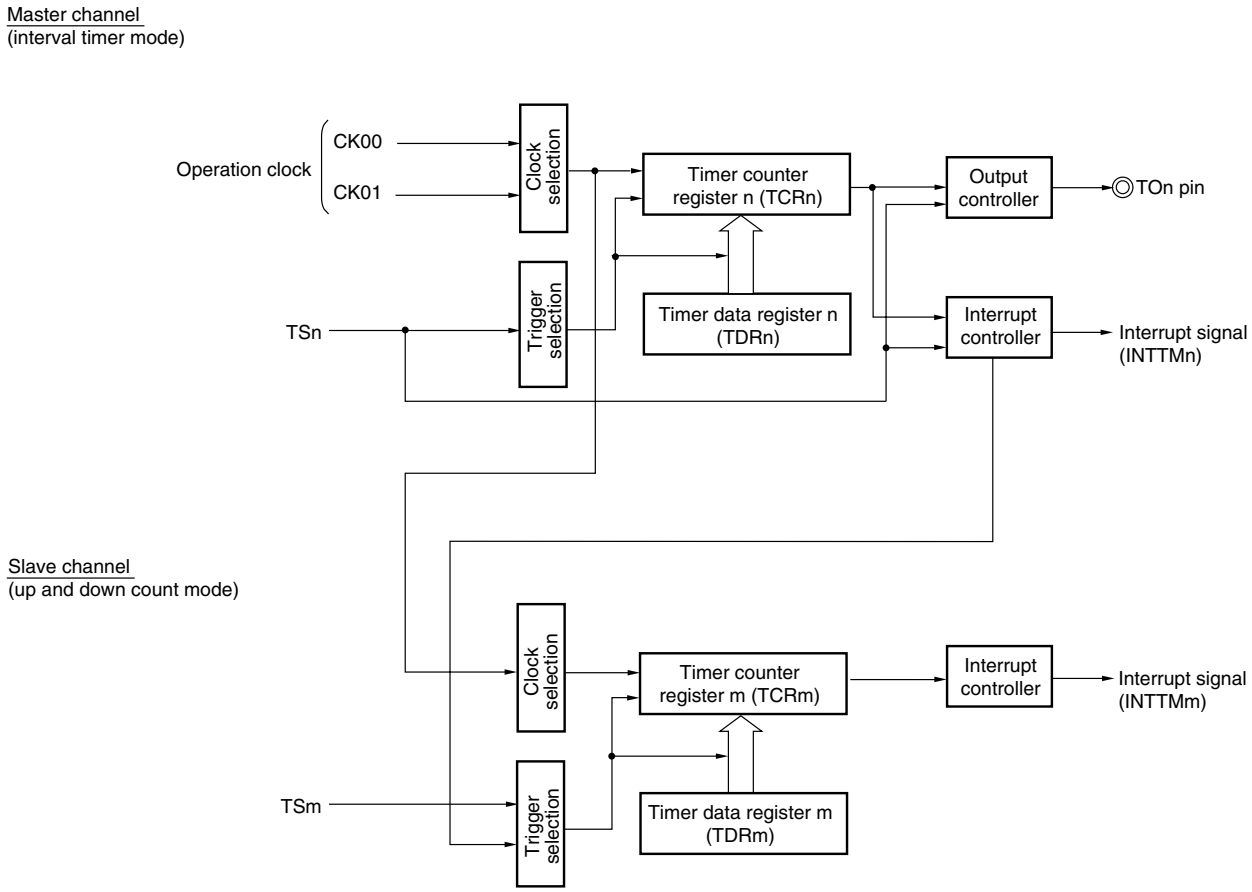

Remarks 1. OPM = 0: n = 00, m = 08, 09

OPM = 1: n = 00, 04, m = 01, 05

2. OPM: Bit15 of TAU option mode register (OPMR)

Figure 7-56. Example of Basic Timing of Operation as A/D Conversion Trigger Output Function (Type 2)
(Default setting : TOn = 0, MDn0 = 1)

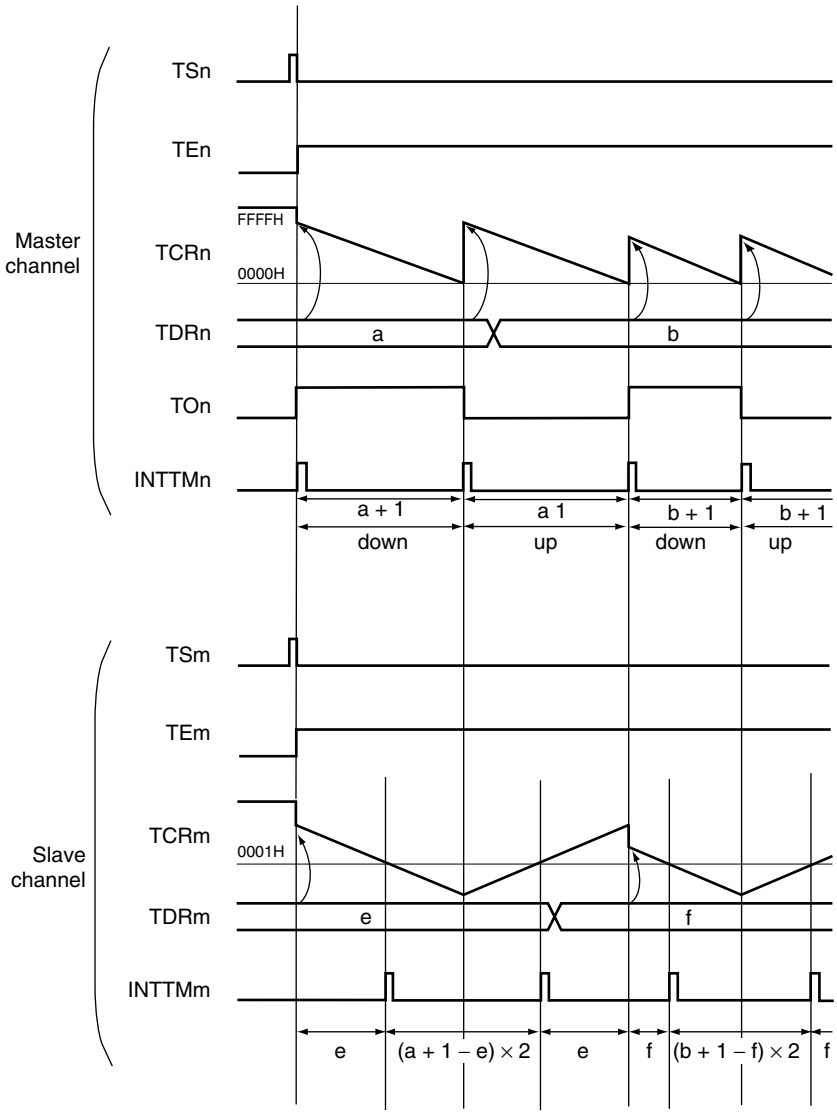

Remarks 1. OPM = 0: n = 00, m = 08, 09
OPM = 1: n = 00, 04, m = 01, 05

2. OPM: Bit15 of TAU option mode register (OPMR)

Figure 7-57. Example of Set Contents of Registers When A/D Conversion Trigger Output Function (Type 2) (Master Channel) Is Used

(a) Timer mode register n (TMRn)

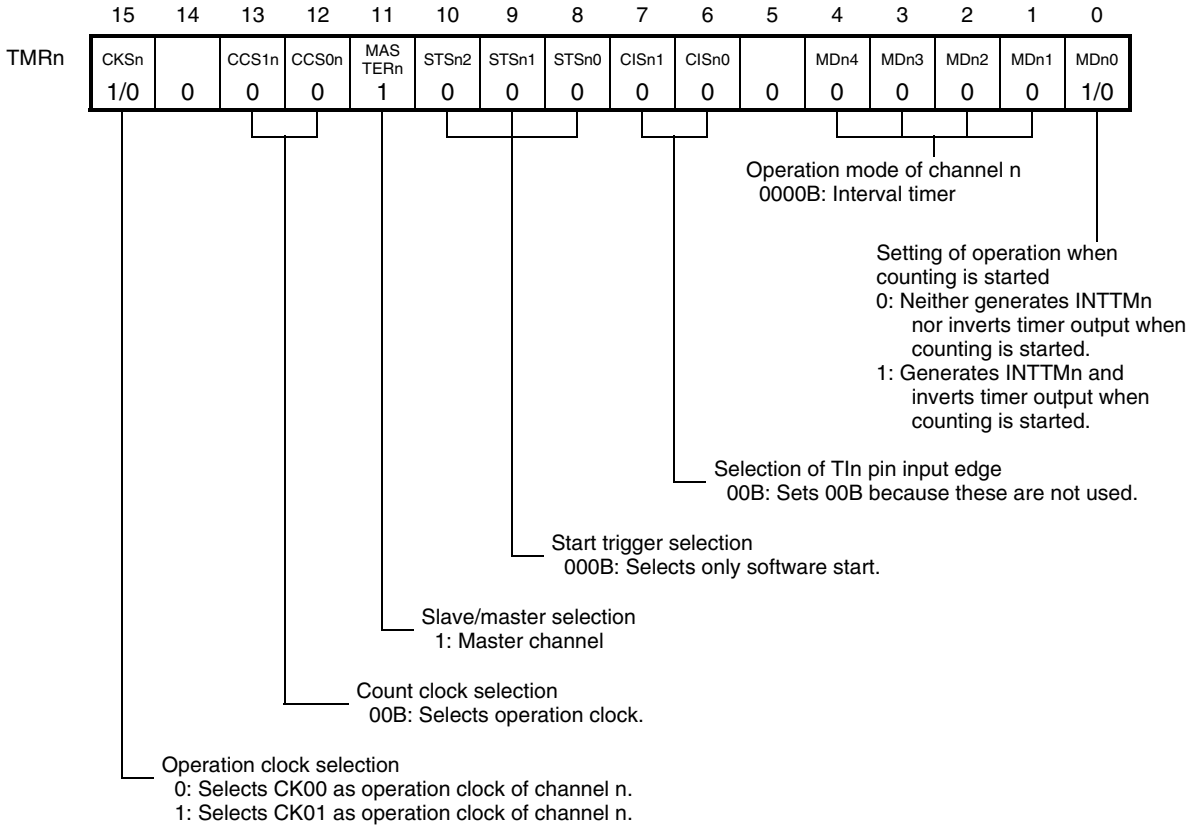

(b) Other registers

TOE0:TOEn	0: Stops the TOn output operation by counting operation. 1: Enables the TOn output operation by counting operation.
TO0:TOn Note	0: Outputs a low level from TOn. 1: Outputs a high level from TOn.
TOM0:TOMn	0: Sets master channel output mode.
TOT0:TOTn	0: Sets 0 when TOMn = 0 (master channel output mode).
TOL0:TOLn	0: Sets 0 when TOMn = 0 (master channel output mode).
TDE0:TDEn	0: Stops dead time control.
TRE0:TREn	0: Stops real-time output.
TRO0:TROn	0: Sets 0 when TREn = 0 (stops real-time output).
TRC0:TRCn	0: Does not operate as the real-time output trigger generation channel.
TME0:TMEn	0: Stops modulated output.

Note When MDn0 = 1, TOn is set to 0,
When MDn0 = 0, TOn is set to 1

Remark n = 00, 04

Figure 7-58. Example of Set Contents of Registers When A/D Conversion Trigger Output Function (Type 2) (Slave Channel m) Is Used

(a) Timer mode register m (TMRm)

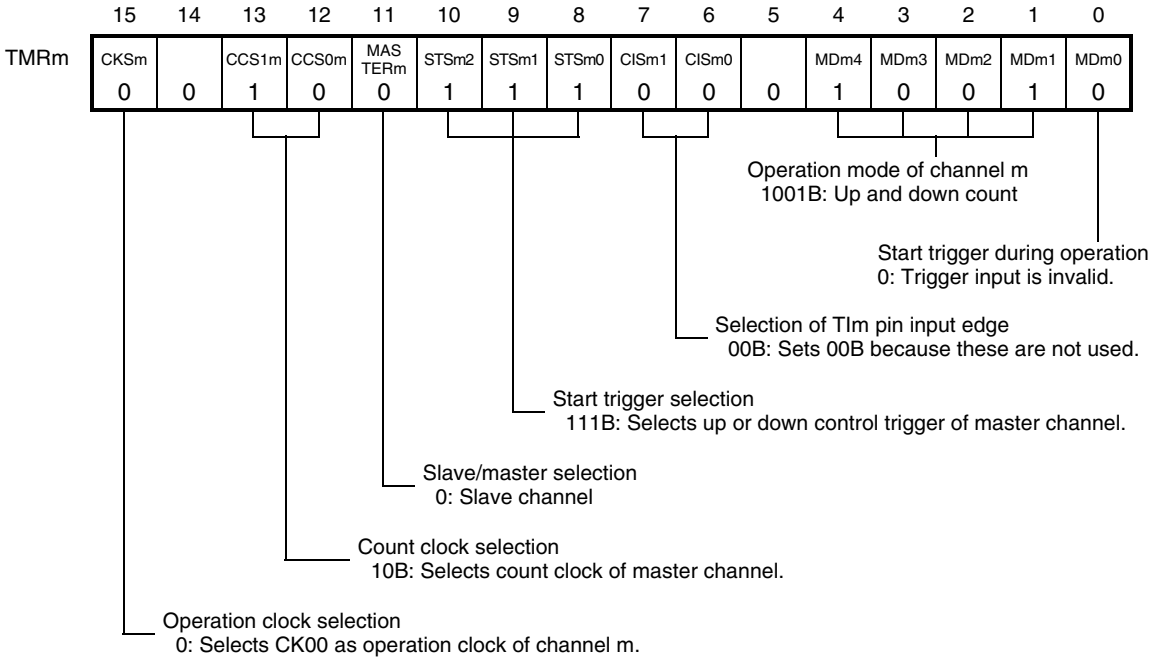

(b) Other registers

TOE0:TOEm	0: Stops the TOm output operation by counting operation.
TO0:TOm	0: Outputs a low level from TOm.
TOM0:TOMm	0: Sets 0 when TOEm = 0 (stops the TOn operation by counting operation).
TOT0:TOTm	0: Sets 0 when TOMm = 0 (master channel output mode).
TOL0:TOLm	0: Sets 0 when TOMm = 0 (master channel output mode).
TDE0:TDEm	0: Stops dead time control.
TRE0:TREm	0: Stops real-time output.
TRO0:TROm	0: Sets 0 when TREm = 0 (stops real-time output).
TRC0:TRCm	0: Does not operate as the real-time output trigger generation channel.
TME0:TMEm	0: Stops modulated output.

Remarks **1.** OPM = 0: n = 00, m = 08, 09
OPM = 1: n = 00, 04, m = 01, 05
2. OPM: Bit15 of TAU option mode register (OPMR)

Figure 7-59. Operation Procedure When A/D Conversion Trigger Output Function (Type 2) Is Used (1/2)

	Software Operation	Hardware Status
TAUS default setting		Power-off status (Clock supply is stopped and writing to each register is disabled.)
	Sets the TAU0EN and TAUOPEN bits of the PER2 register to 1. →	Power-on status. Each channel stops operating. (Clock supply is started and writing to each register is enabled.)
	Sets the TPS0 register. Determines clock frequencies of CK00 and CK01.	
Channel default setting	Sets the TMRn and TMRm registers of channels to be used (determines operation mode of channels). An interval (period) value is set to the TDRn register of the master channel, and an interrupt width is set to the TDRm register of the slave channel.	Channel stops operating. (Clock is supplied and some power is consumed.) The TOn pin goes into Hi-Z output states.
	Sets the master channel. Sets the TOMn bit of the TOM0 register to 0 (master channel output mode). Sets the TDEn bit of the TDE0 register to 0 (dead time control enable).	
	Sets the TOn bit, and determines default levels of the TOn bit. →	The TOn default setting level is output when the port mode register is in output mode and the port register is 0.
	Sets the TOEn bit to 1 and enables operation of TOn. →	TOn does not change because channel stop operating.
	Clears the port register and port mode register to 0. →	The TOn pin outputs the set level of TOn.
Operation start	Sets the TOEn (master) bit to 1 (only when operation is resumed). Sets the TSn (master) and TSm (slave) bits of the TS0 register to 1 at the same time. → The TSn and TSm bits automatically return to 0 because they are trigger bits.	TEn = 1, TEm = 1 When the master and slave channels start counting and the MDn0 bit of the TMRn register is 1, INTTMn is generated.
During operation	The set value of the TDRn (master) register must be changed during an up status period. The set value of the TDRm (slave) register can be changed. The TCRn and TCRm registers can always be read. The TSRm (slave) register can always be read.	At the master channel, TCRn loads the value of TDRn and counts down. When the count value reaches TCRn = 0000H, INTTMn is generated. At the same time, the value of TDRn is loaded to TCRn, and the counter starts counting down again. At the slave channel, TCRm loads the value of TDRm, and counting down and up are switched according to the operation of the master channel. INTTMm is generated and count operation is stopped upon detection of TCRm = 0001H. TCRm loads the value of TDRm again and count operation is continued by the generation of INTTMn during an up status of the master channel.

Operation is resumed. (from next page)

Remarks **1.** OPM = 0: n = 00, m = 08, 09
OPM = 1: n = 00, 04, m = 01, 05

2. OPM: Bit15 of TAU option mode register (OPMR)

Operation is resumed.
(to forward page)

Figure 7-59. Operation Procedure When A/D Conversion Trigger Output Function (Type 2) Is Used (2/2)

	Software Operation	Hardware Status
Operation stop	The TTn (master) and TTm (slave) bits are set to 1 at the same time. →	TEn and TEm = 0, and count operation stops. TCRn and TCRm hold count values and stop. The TOn output is not initialized but hold current statuses.
	The TTn and TTm bits automatically return to 0 because they are trigger bits.	
	Sets the TOEn (master) bit to 0, TOn bit to value. →	The TOn pin outputs the set level of TOn.
TAUS stop	The TAU0EN and TAUOPEN bits of the PER2 register are cleared to 0. →	Power-off status All circuits are initialized and SFR of each channel is also initialized. (The TOn bit is cleared to 0 and the TOn pin is set to port mode.)

Remarks 1. OPM = 0: n = 00, m = 08, 09
OPM = 1: n = 00, 04, m = 01, 05

2. OPM: Bit15 of TAU option mode register (OPMR)

7.5.10 Operation as linked real-time output function (type 1)

The linked real-time output function (type 1) includes a function to delay the generation of INTTMn of slave channel 1 so that it occurs later than INTTM00 of master channel 0. By using this function, the TROm value of slave channels 2 to 7 (the real-time output channels) can be specified to be output from TOm after INTTM00 of the master channel has occurred.

If TRCn of the slave channel 1 is set to 1, INTTMn generated by using the combination-operation with master channel is used as the real-time output trigger. The real-time output channel of slave channels 2 to 7 outputs the set value of TROm from TOm by the real-time output trigger.

Slave channel 1 adds a delay to INTTM00 of the master channel and generates a real-time output trigger.

The delay value for INTTM00 of the master channel can be calculated by the following expression.

Delay value for INTTM00 of the master channel = (Set value of TDRn (slave 1) + 1) × Count clock period

The master channel operates in the interval timer mode and counts the periods.

TCR00 loads the value of TDR00 at the first count clock, after the channel start trigger bit (TS00) is set to 1. At this time, INTTM00 is output by setting MD000 of TMR00 to “1”.

Afterward, TCR00 counts down along with the count clock.

When TCR00 has become 0000H, INTTM00 is output upon the next count clock. TCR00 loads the value of TDR00 again at the same timing. Similar operation is continued hereafter.

TCRn of slave channel 1 operates in one-count mode and generates a real-time output trigger. TCRm loads the value of TDRm to TCRm, using INTTM00 of the master channel as a start trigger, and starts counting down. When TCRn = 0000H, TCRn outputs INTTMn and stops counting until the next start trigger (INTTM00 of the master channel) has been input. The setting values of TROn and TROm are output from TOn and TOm at the INTTMn output timing of slave channel 1.

A and b, which a is too expensive

TOm of the lower channel (slave channels 2 to 7) of the slave channel 1 (TRCn = 1) is controlled by the TREm and TRCm bits.

When TREm of the lower channel (TRCm = 0) is “1”, the channel operates as a real-time output channel and TOm outputs the setting value of TROm at the INTTMn output timing of slave channel 1. In the lower channel, TOm does not output the set values of TROm at the INTTMn output timing of slave channel 1 when TREm = 0 or TRCm = 1.

When this function is used, TCRm, TDRm, and INTTMm of the lower channel can be operated as different functions.

TDR00 and TDRn of the master channel and slave channel 1 become valid from the next period (generation of INTTM00 of the master channel).

Caution **TS00 or TSn cannot be set to “1” (forcible restart) while TE00 = 1 or TEn = 1. If TS00 or TSn is set to “1” while TE00 = 1 or TEn = 1, the counter value (TCR00 or TCRn) will be illegal and TOm will not be able to output the expected waveform.**

Remark n = 01
m = 02 to 07

Figure 7-60. Block Diagram of Operation as Linked Real-Time Output Function (Type 1)

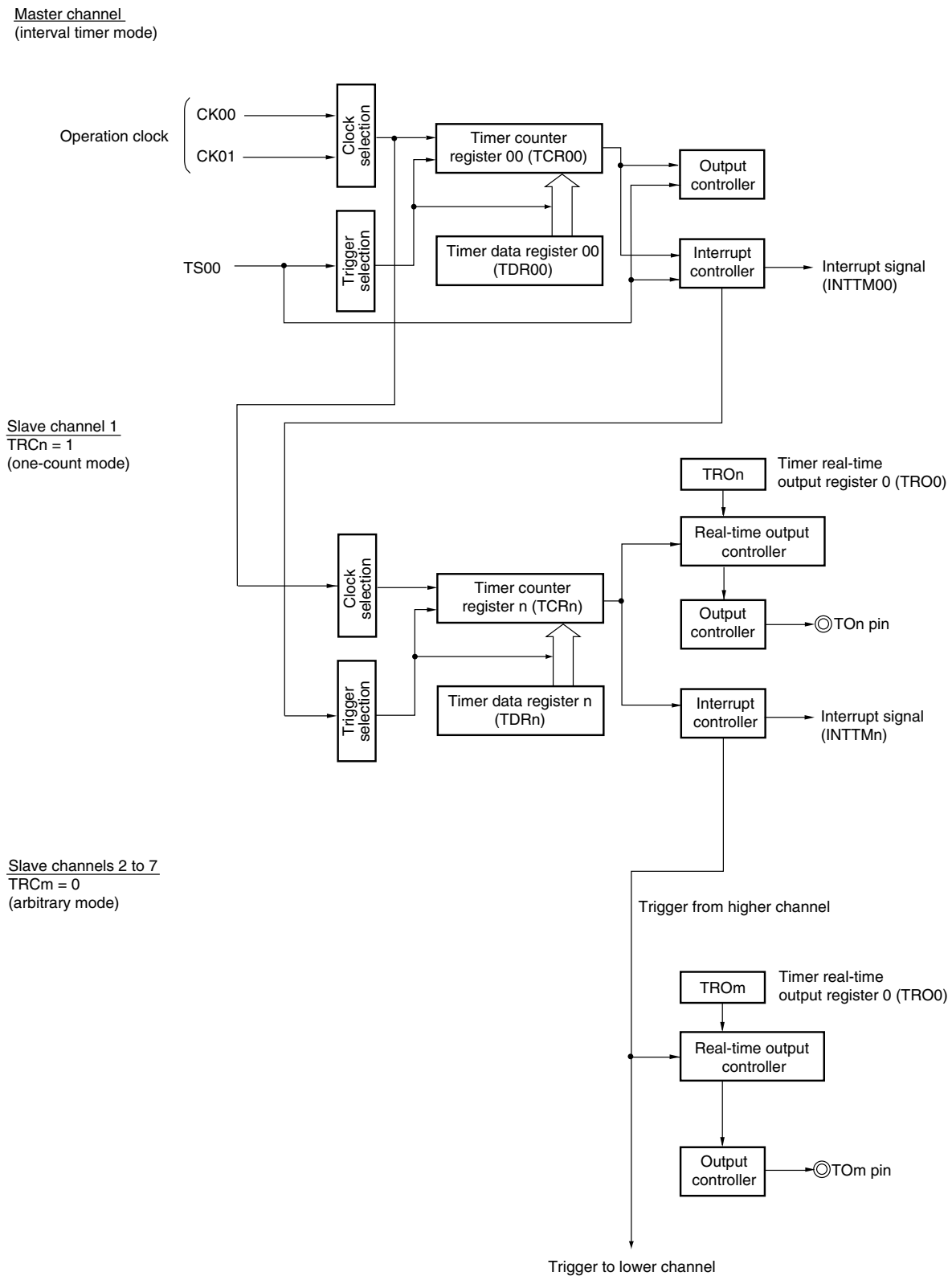

Remark n = 01
m = 02 to 07

Figure 7-61. Example of Basic Timing of Linked Real-Time Output Function (Type 1)
(Default setting : TOn, TOm = 0)

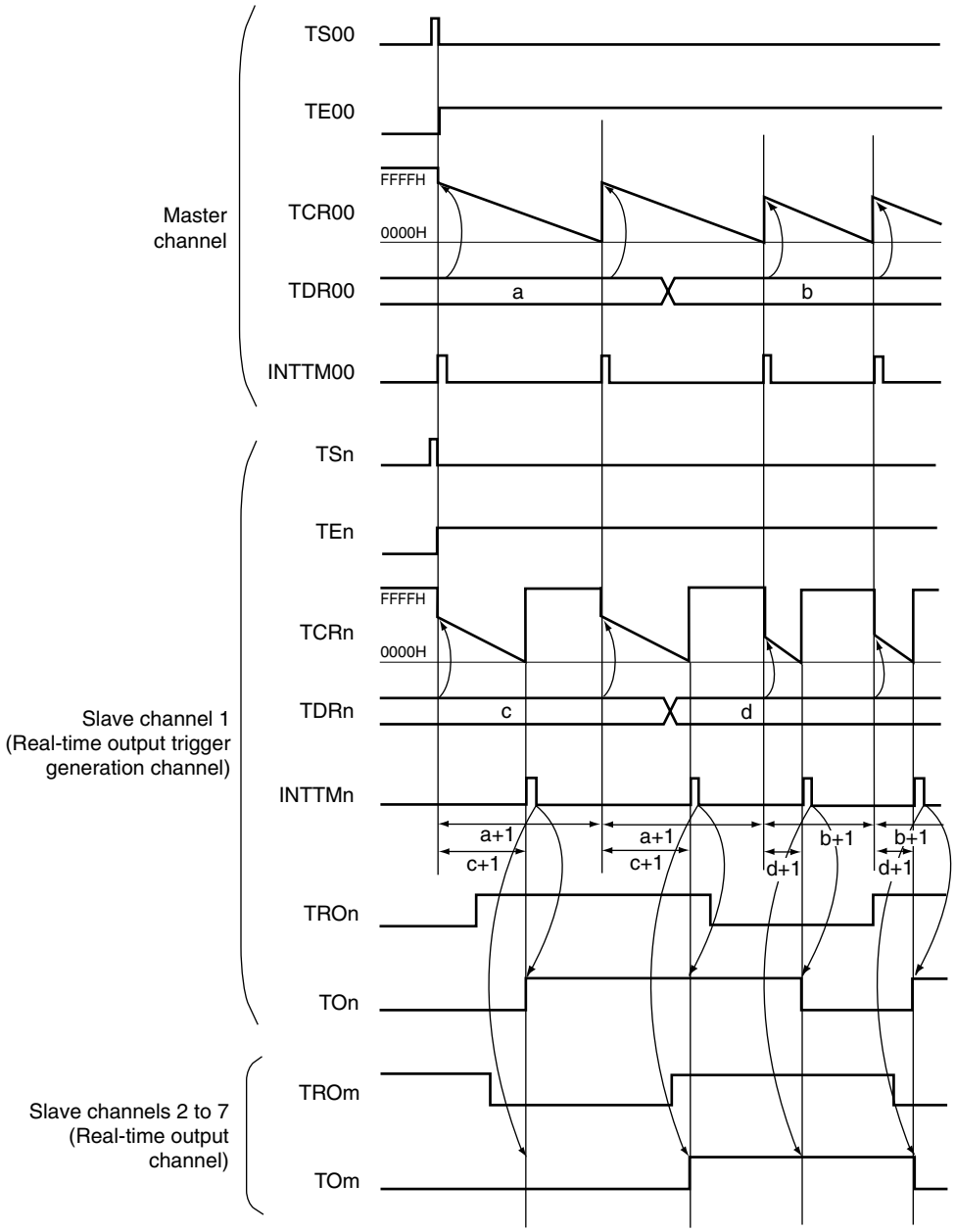

Remark n = 01
m = 02 to 07

Figure 7-62. Example of Set Contents of Registers When Linked Real-Time Output Function (Type 1) (Master Channel) Is Used

(a) Timer mode register 00 (TMR00)

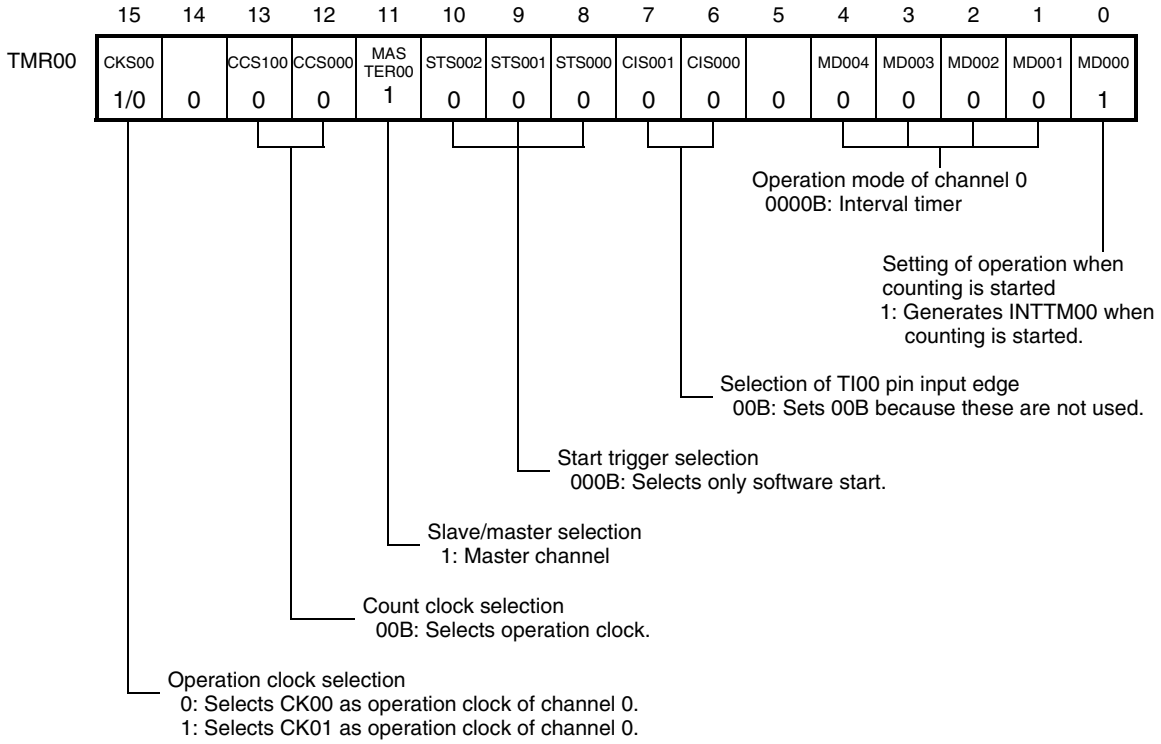

(b) Other registers

TOE0:TOE00	0: Stops the TO00 output operation by counting operation.
TO0:TO00	0: Outputs a low level from TO00.
TOM0:TOM00	0: Sets 0 when TOE00 = 0 (stops the TO00 output operation by counting operation).
TOT0:TOT00	0: Sets 0 when TOM00 = 0 (master channel output mode).
TOL0:TOL00	0: Sets 0 when TOM00 = 0 (master channel output mode).
TDE0:TDE00	0: Stops dead time control.
TRE0:TRE00	0: Stops real-time output.
TRO0:TRO00	0: Sets 0 when TRE00 = 0 (stops real-time output).
TRC0:TRC00	0: Does not operate as the real-time output trigger generation channel.
TME0:TME00	0: Stops modulated output.

Figure 7-63. Example of Set Contents of Registers When Linked Real-Time Output Function (Type 1) (Slave Channel 1) Is Used

(a) Timer mode register n (TMRn) of slave channel 1 (real-time output trigger generation channel (TRCn = 1))

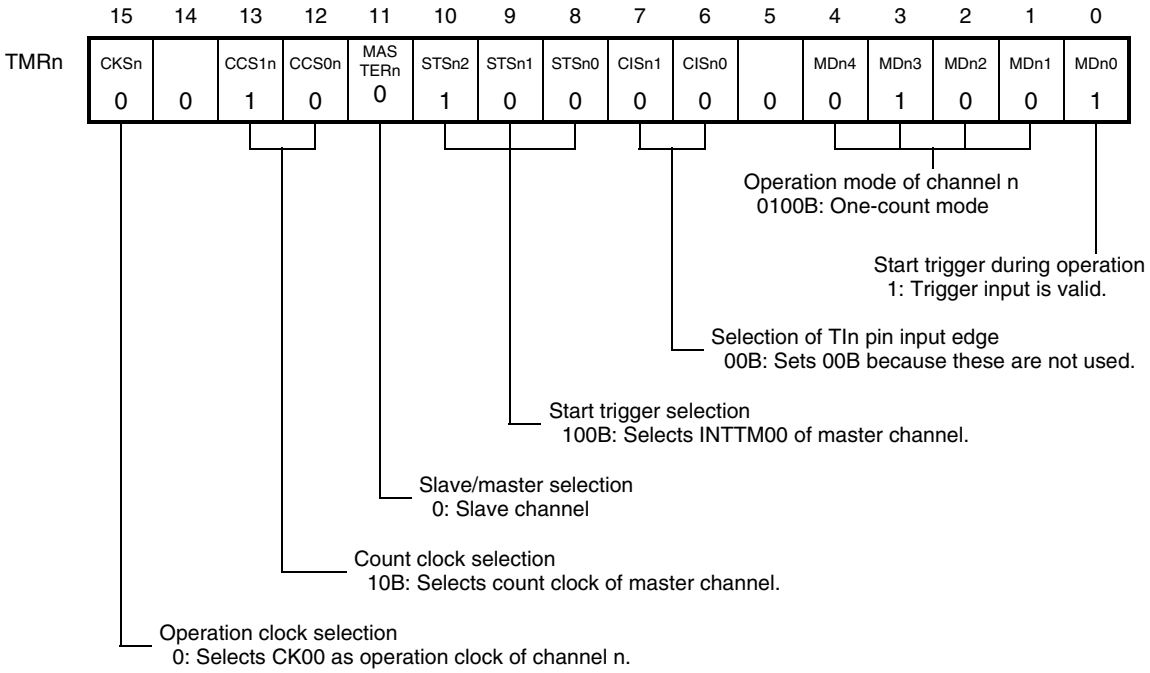

(b) Other registers of slave channel 1 (real-time output trigger generation channel (TRCn = 1))

TOE0:TOEn	0: Stops the TOn output operation by counting operation. 1: Enables the TOn output operation by counting operation.
TO0:TOn	0: Outputs a low level from TOn. 1: Outputs a high level from TOn.
TOM0:TOMn	0: Master channel output mode
TOT0:TOTn	0: Sets 0 when TOMn = 0 (master channel output mode).
TOL0:TOLn	0: Sets 0 when TOMn = 0 (master channel output mode).
TDE0:TDEn	0: Stops dead time control.
TRE0:TREn	0: Stops real-time output. 1: Enables real-time output.
TRO0:TROn	0: Outputs a low level as real-time output. 1: Outputs a high level as real-time output.
TRC0:TRCn	1: Operates as the real-time output trigger generation channel.
TME0:TMEn	0: Stops modulated output.

Remark n = 01

Figure 7-64. Example of Set Contents of Registers When Linked Real-Time Output Function (Type 1) (Slave Channels 2 to 7) Is Used

(a) Timer mode register m (TMRm) of slave channels 2 to 7 (real-time output channel (TRCm = 0))

With the linked real-time output function (type 1), TMRm of the channel when TRCm is set to 0 can be set arbitrarily.

(b) Other registers of slave channels 2 to 7 (real-time output channel (TRCm = 0))

TOE0:TOEm	0: Stops the TOm output operation by real-time output operation. 1: Enables the TOm output operation by real-time output operation.
TO0:TOm	0: Outputs a low level from TOm. 1: Outputs a high level from TOm.
TOM0:TOMm	0: Sets 0 when TREm = 1 (enables real-time output).
TOT0:TOTm	0: Sets 0 when TOMm = 0 (master channel output mode).
TOL0:TOLm	0: Sets 0 when TOMm = 0 (master channel output mode).
TDE0:TDEm	0: Stops dead time control.
TRE0:TREm	1: Enables real-time output.
TRO0:TROm	0: Outputs a low level as real-time output. 1: Outputs a high level as real-time output.
TRC0:TRCm	0: Does not operate as the real-time output trigger generation channel.
TME0:TMEm	0: Stops modulated output.

Remark m = 02 to 07

Figure 7-65. Operation Procedure of Linked Real-Time Output Function (Type 1) (1/2)

	Software Operation	Hardware Status
TAUS default setting		Power-off status (Clock supply is stopped and writing to each register is disabled.)
	Sets the TAU0EN and TAUOPEN bits of the PER2 register to 1. →	Power-on status. Each channel stops operating. (Clock supply is started and writing to each register is enabled.)
	Sets the TPS0 register. Determines clock frequencies of CK00 and CK01.	
Channel default setting	Sets the TMR00 and TMRn registers of each channel to be used (determines operation mode of channels). An interval (period) value is set to the TDR00 register of the master channel and TDRn register of the slave channel 1.	Channel stops operating. (Clock is supplied and some power is consumed.)
	[Real-time output trigger generation channel (slave 1)] Sets the TRCn bit to 1 (trigger generation channel). Sets the TREn bit to 1 (real-time output enable). [Real-time output channel (slave 2 to 7)] Sets the TRCm bit to 0 (non-trigger generation channel). Sets the TREm bit to 1 (real-time output enable).	The TOn and TOm pins go into Hi-Z output state.
	Sets the TOEn and TOEm bits to 1 and enables output of TOn and TOm. →	TOn and TOm do not change because channel has stopped operating.
	Clears the port register and port mode register to 0. →	The TOn and TOm pins output the TOn and TOm set levels.
Operation start	Sets the TOEn (slave 1) and TOEm (slave 2 to 7) bits to 1 (only when operation is resumed). The TS00 (master) and TSn (slave 1) bits of the TS0 register are set to 1 at the same time. → The TS00 and TSn bits automatically return to 0 because they are trigger bits.	TE00 = 1, TEn = 1 When the master channel starts counting, INTTM00 is generated. Triggered by this interrupt, the slave channel 1 also start counting.

Remark n = 01
m = 02 to 07

Operation is resumed. (from next page)

Figure 7-65. Operation Procedure of Linked Real-Time Output Function (Type 1) (2/2)

Operation is resumed. (to forward page)

	Software Operation	Hardware Status
During operation	Set value of the TDR00 and TDRn registers can be changed. The TCR00 and TCRn registers can always be read. Set values of the TROn and TROm bits can be changed.	The counter of the master channel loads the TDR00 value to TCR00 and counts down. When the count value reaches TCR00 = 0000H, INTTM00 is generated. At the same time, the value of the TDR00 register is loaded to TCR00, and the counter starts counting down again. At slave channel 1, the values of the TDRn register are transferred to TCRn, triggered by INTTM00 of the master channel, and the counter starts counting down. When the counter has counted down to 0000H, INTTMn is output and the counting operation is stopped. After that, the above operation is repeated. The set value of TROm of the slave channels 2 to 7 (real-time output channel) is output from TOm at the INTTMn output timing.
Operation stop	The TT00 (master) and TTn (slave 1) bits are set to 1 at the same time. →	TE00, TEn = 0, and count operation stops. TCR00 and TCRn hold count value and stops. The TOn and TOm output is not initialized but holds current status.
	The TOEn and TOEm bits are cleared to 0 and values are set to TOn and TOm. →	The set values of TOn and TOm initialize the outputs of TOn and TOm.
TAUS stop	To hold the TOn and TOm pin output levels Clears the TOn and TOm bits to 0 after the values to be held are set to the port register. →	The TOn and TOm pin output levels are held by port function.
	When holding the TOn and TOm pin output levels is not necessary Switches the port mode register to input mode. →	The TOn and TOm pin output levels go into Hi-Z output state.
	The TAU0EN and TAUOPEN bits of the PER2 register are cleared to 0. →	Power-off status All circuits are initialized and SFR of each channel is also initialized. (The TOn and TOm bits are cleared to 0 and the TOn and TOm pins are set to port mode.)

Remark n = 01
m = 02 to 07

7.5.11 Operation as linked real-time output function (type 2)

The linked real-time output function (type 2) includes a function to output a signal that is INTTM00 of master channel 0 thinned the specified number of times as INTTMn of slave channel 1. By using this function, the TROm value of slave channels 2 to 7 (the real-time output channels) can be output from TOm synchronized with INTTMn (a signal that is INTTM00 of the master channel thinned the specified number of times).

If TRCn of the slave channel 1 is set to 1, INTTMn that is INTTM00 of the master channel being thinned by the specified number of times from the slave channel is used as the real-time output trigger. The real-time output channel of slave channels 2 to 7 outputs the set value of TROm from TOm by the real-time output trigger.

The number of interrupts to be thinned can be calculated by the following expression.

Number of interrupts to be thinned = Set value of TDRn (slave channel 1) → Outputting INTTM00 of the master channel from INTTMn of the slave channel every {Set value of TDRn (slave 1) + 1} times

The master channel operates in the interval timer mode and counts the periods.

TCR00 loads the value of TDR00 at the first count clock, after the channel start trigger bit (TS00) is set to 1. At this time, INTTM00 is output by setting MD000 of TMR00 to “1”.

Afterward, TCR00 counts down along with the count clock.

When TCR00 has become 0000H, INTTM00 is output upon the next count clock. TCR00 loads the value of TDR00 again at the same timing. Similar operation is continued hereafter.

Slave channel 1 generates a real-time output trigger. INTTMn, which is INTTM00 of the master channel on which thinning control has been performed, is output by using INTTM00 of the master channel as the count clock and by performing an operation in event counter mode. TCRn loads the value of TDRn by setting the channel start trigger bit (TSn) to 1. TCRn counts down along with the INTTM00 output of the master channel, and loads the value of TDRn again and outputs INTTMn when TCRn becomes 0000H. Similar operation is continued hereafter. The setting values of TROn and TROm are output from TOn and TOm at the INTTMn output timing of slave channel 1.

TOm of the lower channel (slave channels 2 to 7) of the slave channel 1 (TRCn = 1) is controlled by the TREm and TRCm bits.

When TREm of the lower channel (TRCm = 0) is “1”, the channel operates as a real-time output channel and TOm outputs the setting value of TROm at the INTTMn output timing of slave channel 1. In the lower channel, TOm does not output the set value of TROm at the INTTMn output timing of the real-time output trigger generation channel when TREm = 0 or TRCm = 1. When this function is used, TCRm, TDRm, and INTTMm of the lower channel can be operated as different functions.

TDR00 of the master channel becomes valid from the next start timing (master channel INTTM00 generation).

TDRn of the slave channel 1 becomes valid from the next start timing (slave channel 1 INTTMn generation).

Caution **TS00 or TSn cannot be set to “1” (forcible restart) while TE00 = 1 or TEn = 1. If TS00 or TSn is set to “1” while TE00 = 1 or TEn = 1, the counter value (TCR00 or TCRn) will be illegal and TOm will not be able to output the expected waveform.**

Remark n = 01
m = 02 to 07

Figure 7-66. Block Diagram of Operation as Linked Real-Time Output Function (Type 2)

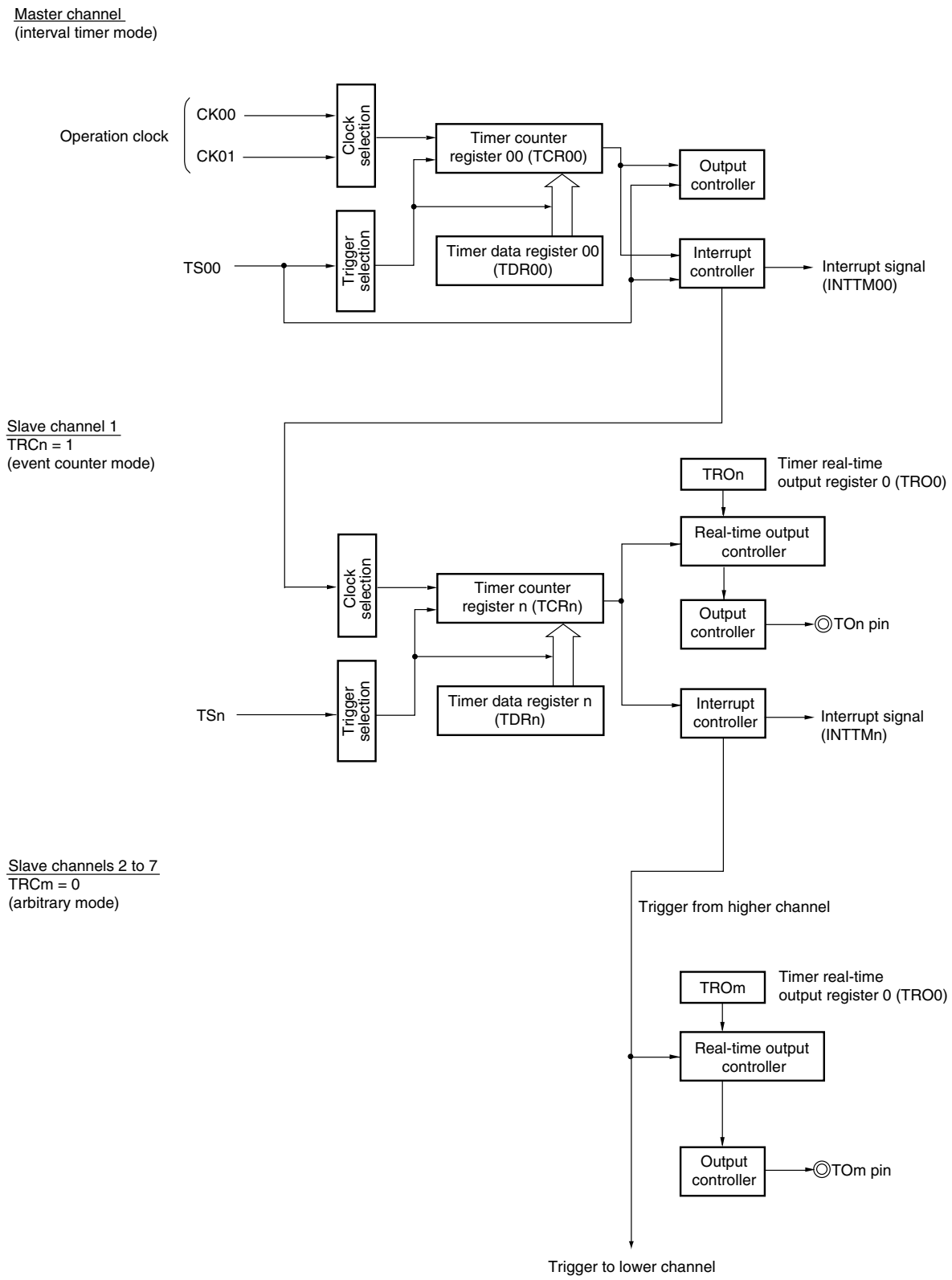

Remark n = 01
m = 02 to 07

Figure 7-67. Example of Basic Timing of Linked Real-Time Output Function (Type 2)
(Default setting : TOn, TOm = 0, MD000 = 1)

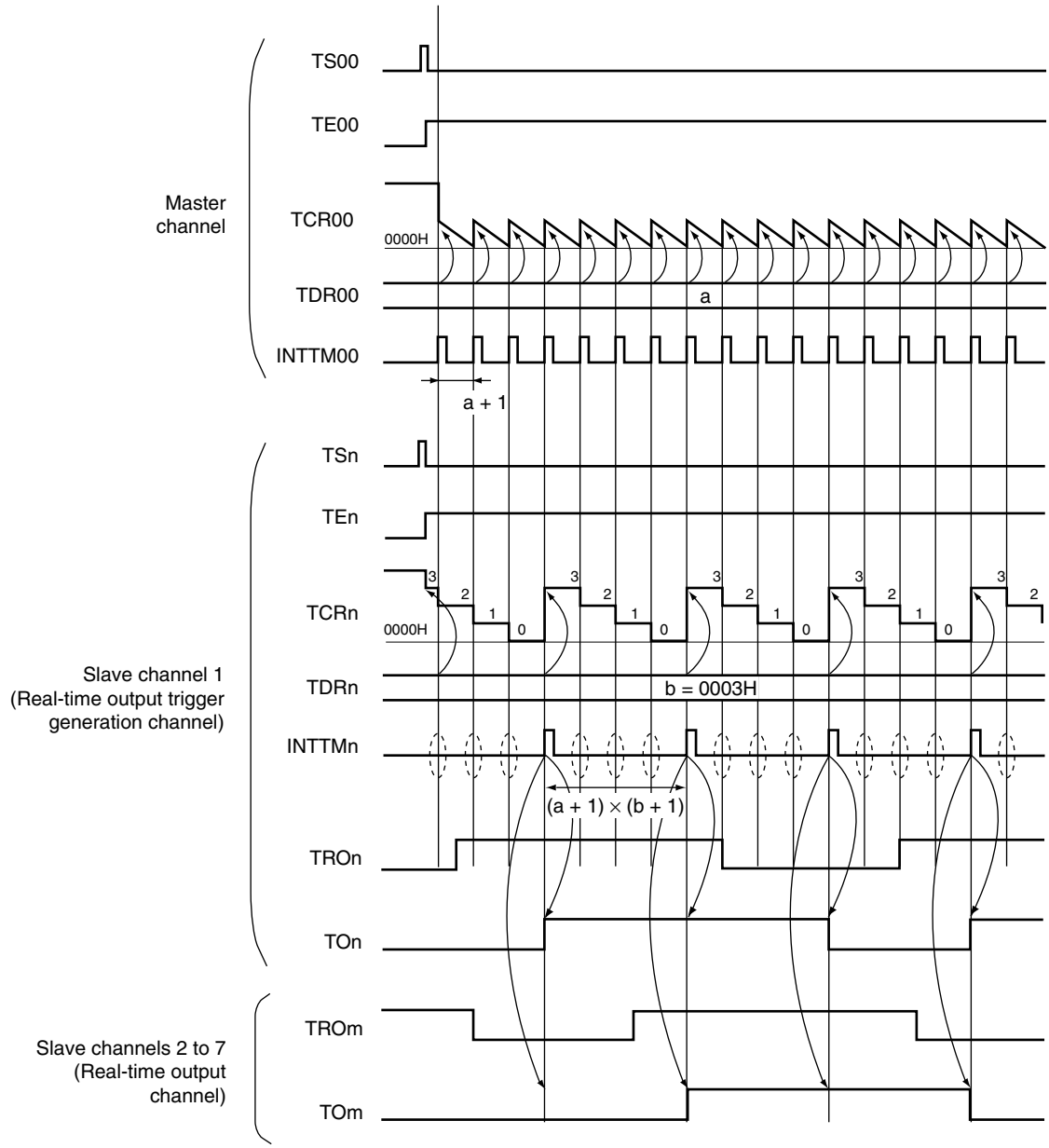

Remark n = 01
m = 02 to 07

Figure 7-68. Example of Set Contents of Registers When Linked Real-Time Output Function (Type 2) (Master Channel) Is Used

(a) Timer mode register 00 (TMR00)

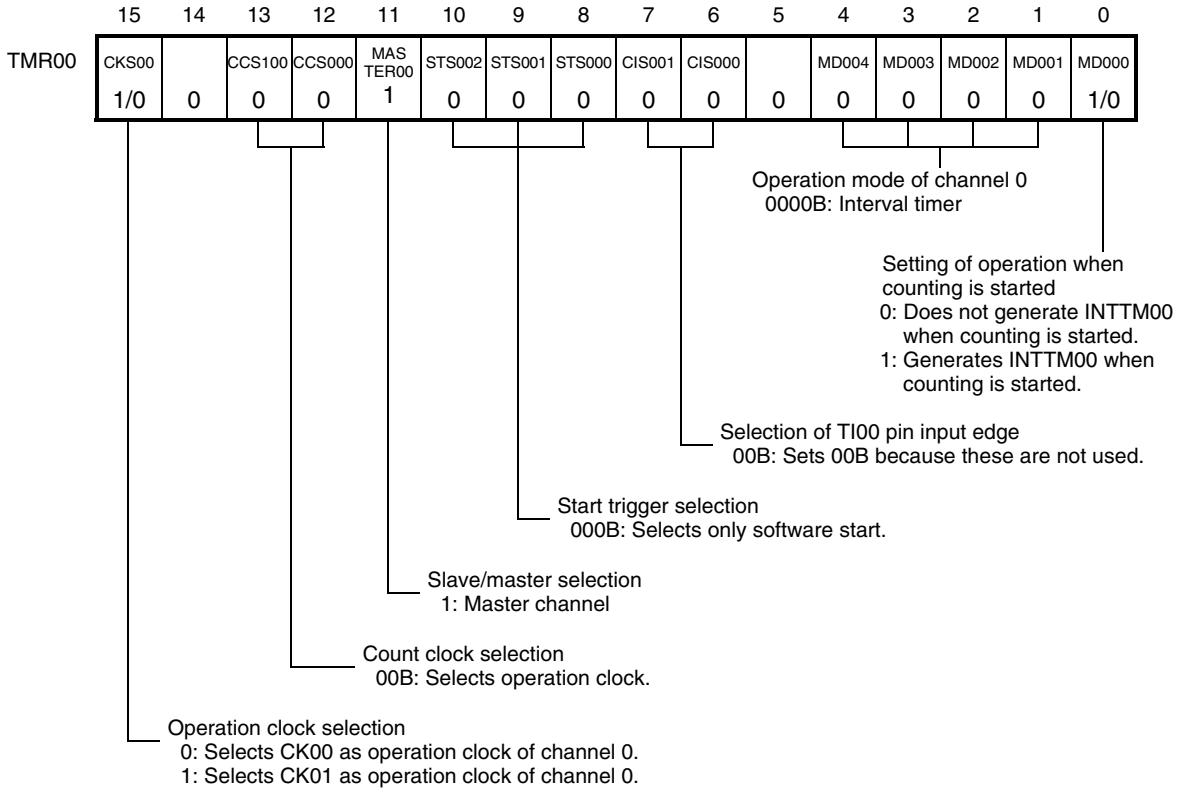

(b) Other registers

TOE0:TOE00	0: Stops the TO00 output operation by counting operation.
TO0:TO00	0: Outputs a low level from TO00.
TOM0:TOM00	0: Master channel output mode
TOT0:TOT00	0: Sets 0 when TOM00 = 0 (master channel output mode).
TOL0:TOL00	0: Sets 0 when TOM00 = 0 (master channel output mode).
TDE0:TDE00	0: Stops dead time control.
TRE0:TRE00	0: Stops real-time output.
TRO0:TRO00	0: Sets 0 when TRE00 = 0 (stops real-time output).
TRC0:TRC00	0: Does not operate as the real-time output trigger generation channel.
TME0:TME00	0: Stops modulated output.

Figure 7-69. Example of Set Contents of Registers When Linked Real-Time Output Function (Type 2) (Slave Channel 1) Is Used

(a) Timer mode register n (TMRn) of slave channel 1 (real-time output trigger generation channel (TRCn = 1))

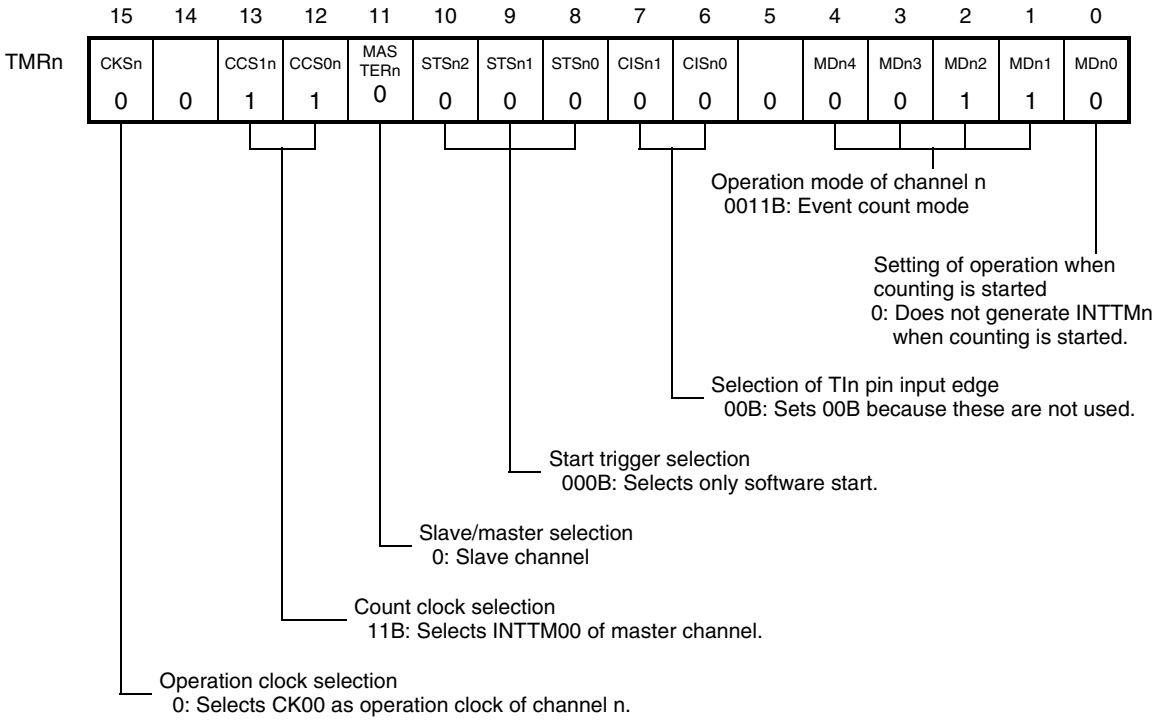

(b) Other registers of slave channel 1 (real-time output trigger generation channel (TRCn = 1))

TOE0:TOEn	0: Stops the TOn output operation by counting operation. 1: Enables the TOn output operation by counting operation.
TO0:TOn	0: Outputs a low level from TOn. 1: Outputs a high level from TOn.
TOM0:TOMn	0: Master channel output mode
TOT0:TOTn	0: Sets 0 when TOMn = 0 (master channel output mode).
TOL0:TOLn	0: Sets 0 when TOMn = 0 (master channel output mode).
TDE0:TDEn	0: Stops dead time control.
TRE0:TREn	0: Stops real-time output. 1: Enables real-time output.
TRO0:TROn	0: Outputs a low level as real-time output. 1: Outputs a high level as real-time output.
TRC0:TRCn	1: Operates as the real-time output trigger generation channel.
TME0:TMEn	0: Stops modulated output.

Remark n = 01

Figure 7-70. Example of Set Contents of Registers When Linked Real-Time Output Function (Type 2) (Slave Channels 2 to 7) Is Used

(a) Timer mode register m (TMRm) of slave channels 2 to 7 (real-time output channel (TRCm = 0))

With the linked real-time output function (type 2), TMRm of the channel when TRCm is set to 0 can be set arbitrarily.

(b) Other registers of slave channels 2 to 7 (real-time output channel (TRCm = 0))

TOE0:TOEm	0: Stops the TOm output operation by real-time output operation. 1: Enables the TOm output operation by real-time output operation.
TO0:TOm	0: Outputs a low level from TOm. 1: Outputs a high level from TOm.
TOM0:TOMm	0: Sets 0 when TREm = 1 (enables real-time output).
TOT0:TOTm	0: Sets 0 when TOMm = 0 (master channel output mode).
TOL0:TOLm	0: Sets 0 when TOMm = 0 (master channel output mode).
TDE0:TDEm	0: Stops dead time control.
TRE0:TREm	1: Enables real-time output.
TRO0:TROm	0: Outputs a low level as real-time output. 1: Outputs a high level as real-time output.
TRC0:TRCm	0: Does not operate as the real-time output trigger generation channel.
TME0:TMEm	0: Stops modulated output.

Remark m = 02 to 07

Figure 7-71. Operation Procedure of Linked Real-Time Output Function (Type 2) (1/2)

	Software Operation	Hardware Status
TAUS default setting		Power-off status (Clock supply is stopped and writing to each register is disabled.)
	Sets the TAU0EN and TAUOPEN bits of the PER2 register to 1. →	Power-on status. Each channel stops operating. (Clock supply is started and writing to each register is enabled.)
	Sets the TPS0 register. Determines clock frequencies of CK00 and CK01.	
Channel default setting	Sets the TMR00 and TMRn registers of each channel to be used (determines operation mode of channels). An interval (period) value is set to the TDR00 register of the master channel, and the number of interrupts to be thinned is set to the TDRn register of the slave channel 1.	Channel stops operating. (Clock is supplied and some power is consumed.)
	[Real-time output trigger generation channel (slave 1)] Sets the TRCn bit to 1 (trigger generation channel). Sets the TREn bit to 1 (real-time output enable). [Real-time output channel (slave 2 to 7)] Sets the TRCm bit to 0 (non-trigger generation channel). Sets the TREm bit to 1 (real-time output enable).	The TOn and TOm pins go into Hi-Z output state.
	Sets the TOEn and TOEm bits to 1 and enables output of TOn and TOm. →	TOn and TOm do not change because channel has stopped operating.
	Clears the port register and port mode register to 0. →	The TOn and TOm pins output the TOn and TOm set levels.
Operation start	Sets the TOEn (slave 1) and TOEm (slave 2 to 7) bits to 1 (only when operation is resumed). The TS00 (master) and TSn (slave 1) bits of the TS0 register are set to 1 at the same time. → The TS00 and TSn bits automatically return to 0 because they are trigger bits.	TE00 = 1, TEn = 1 At the master channel, TCR00 loads the value of TDR00 by count clock input. INTTM00 is generated when the MD000 bit of the TMR00 register is 1. At the slave channel, TCRn loads the value of TDRn and enters a state to wait for detection of INTTM00 of the master channel.

Remark n = 01
m = 02 to 07

Operation is resumed. (from next page)

Figure 7-71. Operation Procedure of Linked Real-Time Output Function (Type 2) (2/2)

Operation is resumed. (to forward page)

	Software Operation	Hardware Status
During operation	Set values of the TDR00 and TDRn registers can be changed after INTTM00 of the master channel is generated. The TCR00 and TCRn registers can always be read. Set values of the TROn and TROm bits can be changed.	The counter (TCRn) of the master channel counts down. When the count value reaches TCR00 = 0000H, the value of TDR00 is loaded to TCR00 again and the count operation is continued. By detecting TCR00 = 0000H, INTTM00 is generated. The counter (TCRn) of the slave channel 1 counts down every time an INTTM00 signal of the master channel is detected. When the count value reaches TCRn = 0000H, the value of TDRn is loaded to TCRn again and the count operation is continued. By detecting TCRn = 0000H, INTTMn is generated. After that, the above operation is repeated. The set value of TROm of the slave channels 2 to 7 (real-time output channel) is output from TOm at the INTTMn output timing.
Operation stop	The TT00 (master) and TTn (slave 1) bits are set to 1 at the same time. →	TE00, TEn = 0, and count operation stops. TCR00 and TCRn hold count value and stops. The TOn and TOm output is not initialized but holds current status.
	The TT00 and TTn bits automatically return to 0 because they are trigger bits.	
	The TOEn and TOEm bits are cleared to 0 and values are set to TOn and TOm. →	The set values of TOn and TOm initialize the outputs of TOn and TOm.
TAUS stop	To hold the TOn and TOm pin output levels Clears the TOn and TOm bits to 0 after the values to be held are set to the port register. →	The TOn and TOm pin output levels are held by port function.
	When holding the TOn and TOm pin output levels is not necessary Switches the port mode register to input mode. →	The TOn and TOm pin output levels go into Hi-Z output state.
	The TAU0EN and TAUOPEN bits of the PER2 register are cleared to 0. →	Power-off status All circuits are initialized and SFR of each channel is also initialized. (The TOn and TOm bits are cleared to 0 and the TOn and TOm pins are set to port mode.)

Remark n = 01
m = 02 to 07

7.5.12 Operation as linked real-time output function (type 3)

The linked real-time output function (type 3) includes a function to output a signal that is INTTM00 of master channel 0 thinned the specified number of times as INTTMn of slave channel 1. By using this function, the TROm value of slave channels 2 to 7 (the real-time output channels) can be output from TOm synchronized with INTTMn (a signal that is INTTM00 of the master channel thinned the specified number of times). Unlike the linked real-time output function (type 2), with this function, counting of INTTM00 can be started by a software trigger. After counting the specified number of times, counting stops and the system waits for the next software trigger.

If TRCn of the slave channel 1 is set to 1, INTTMn generated by the combination-operation with master channel is used as the real-time output trigger. The real-time output channel of slave channels 2 to 7 outputs the set value of TROm from TOm by the real-time output trigger.

This function starts a count operation by software manipulation (TSn) by using INTTM00 of the master channel as the count clock of slave channel 1. The interrupt generation cycle after having set TSn to 1 can be calculated by the following expression.

Period from setting TSn to “1” until INTTMn output
= (Set value of TDRn (slave 1) + 1) × Count clock period of slave 1
= (Set value of TDRn (slave 1) + 1) × (Set value of TDR00 (master) + 1) × Count clock period of master

Remark A sampling error of less than the count clock period of slave channel 1 occurs, because the setting of TSn = 1 is held pending until the count clock generation of slave channel 1.

The master channel operates in the interval timer mode and counts the periods.

TCR00 loads the value of TDR00 at the first count clock, after the channel start trigger bit (TS00) is set to 1. At this time, INTTM00 is output by setting MD000 of TMR00 to “1”.

Afterward, TCR00 counts down along with the count clock.

When TCR00 has become 0000H, INTTM00 is output upon the next count clock. TCR00 loads the value of TDR00 again at the same timing. Similar operation is continued hereafter.

TCRn of slave channel 1 operates in one-count mode and generates a real-time output trigger. TCRn loads the value of TDRn to TCRn and counts down according to the INTTM00 output of the master channel by using the setting of TSn = 1 of slave channel 1 as the start trigger. When TCRn becomes 0000H, INTTMn will be output and counting will be stopped until the next start trigger (TSn = 1) is input. When TSn is set to “1” for the second time while slave channel 1 is operating (while TCRn is counting down), the second start trigger will be ignored. Set TSn to “1” after INTTMn output. The setting values of TROn and TROm are output from TOn and TOm at the INTTMn output timing of slave channel 1.

TOm of the lower channel (slave channels 2 to 7) of the slave channel 1 (TRCn = 1) is controlled by the TREm and TRCm bits.

When TREm of the lower channel (TRCm = 0) is “1”, the channel operates as a real-time output channel and TOm outputs the setting value of TROm at the INTTMn output timing of slave channel 1. In the lower channel, TOm does not output the set value of TROm at the INTTMn output timing of the real-time output trigger generation channel. when TREm = 0 or TRCm = 1.

When this function is used, TCRm, TDRm, and INTTMm of the lower channel can be operated as different functions.

Remark n = 01
m = 02 to 07

TDR00 of the master channel becomes valid from the next start timing (master channel INTTM00 generation).

TDRn of the slave channel 1 becomes valid from the next start timing (the setting of TSn = 1 of slave channel 1).

Caution TS00 cannot be set to “1” (forcible restart) while TE00 is “1”. If TS00 is set to “1” while TE00 is “1”, the counter value (TCR00) will be illegal and TOm will not be able to output an expected waveform. While TE00 and TEn are “1”, TSn of the slave channel 1 can be manipulated.

Remark n = 01
m = 02 to 07

Figure 7-72. Block Diagram of Operation as Linked Real-Time Output Function (Type 3)

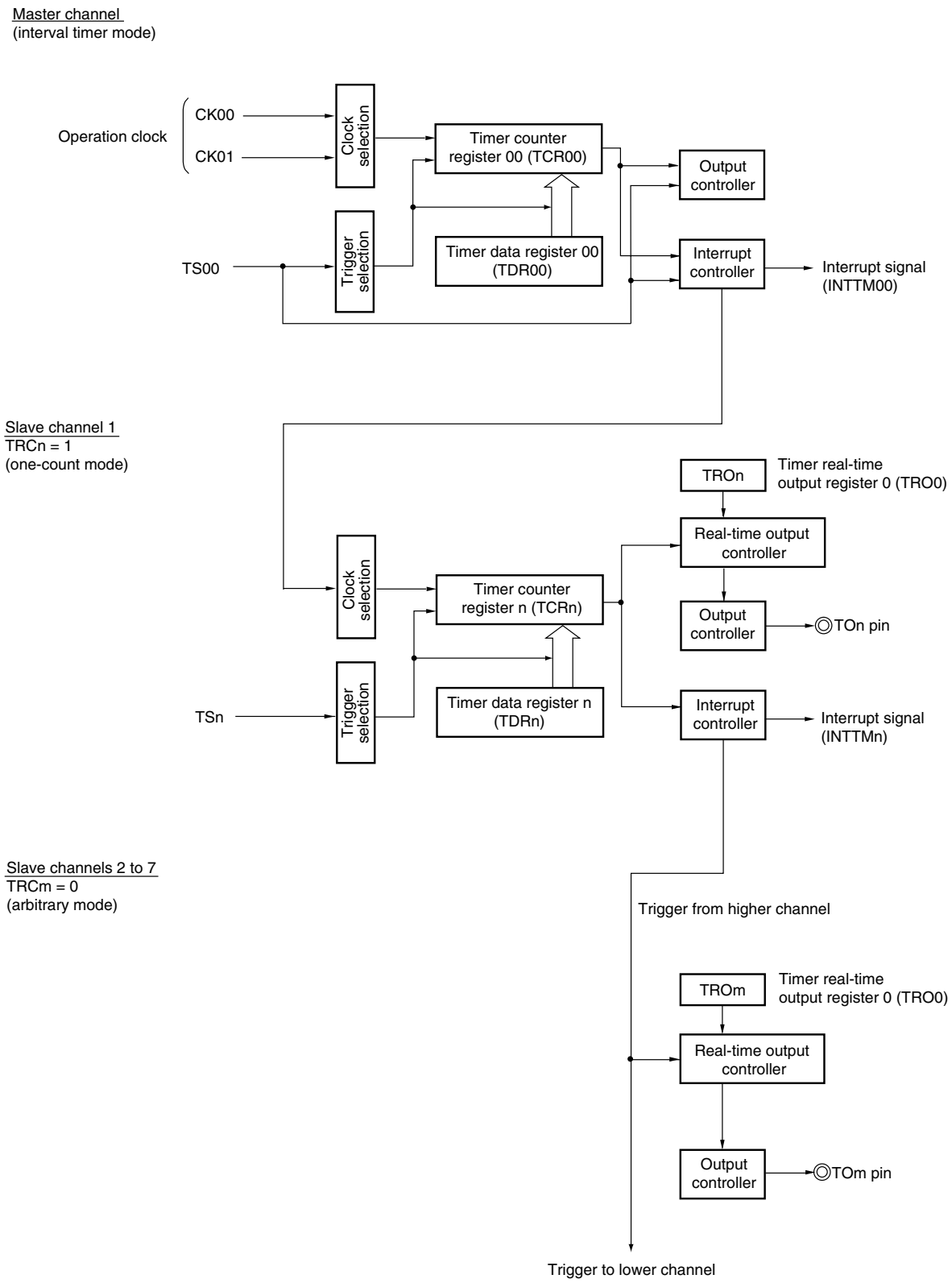

Remark n = 01
m = 02 to 07

Figure 7-73. Example of Basic Timing of Linked Real-Time Output Function (Type 3)
(Default setting : TOn, TOm = 0, MD000 = 1)

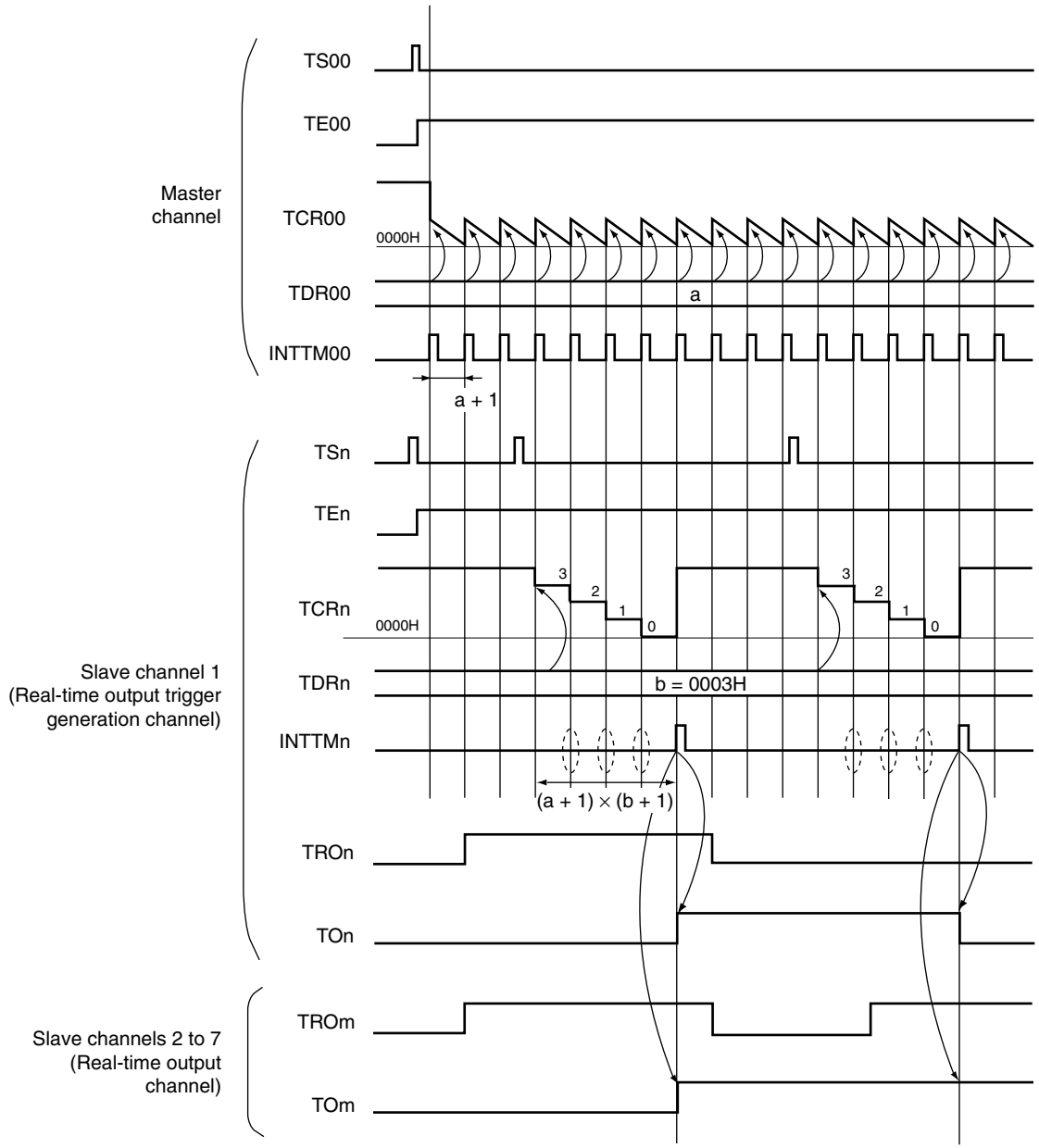

Remark n = 01
m = 02 to 07

Figure 7-74. Example of Set Contents of Registers When Linked Real-Time Output Function (Type 3) (Master Channel) Is Used

(a) Timer mode register 00 (TMR00)

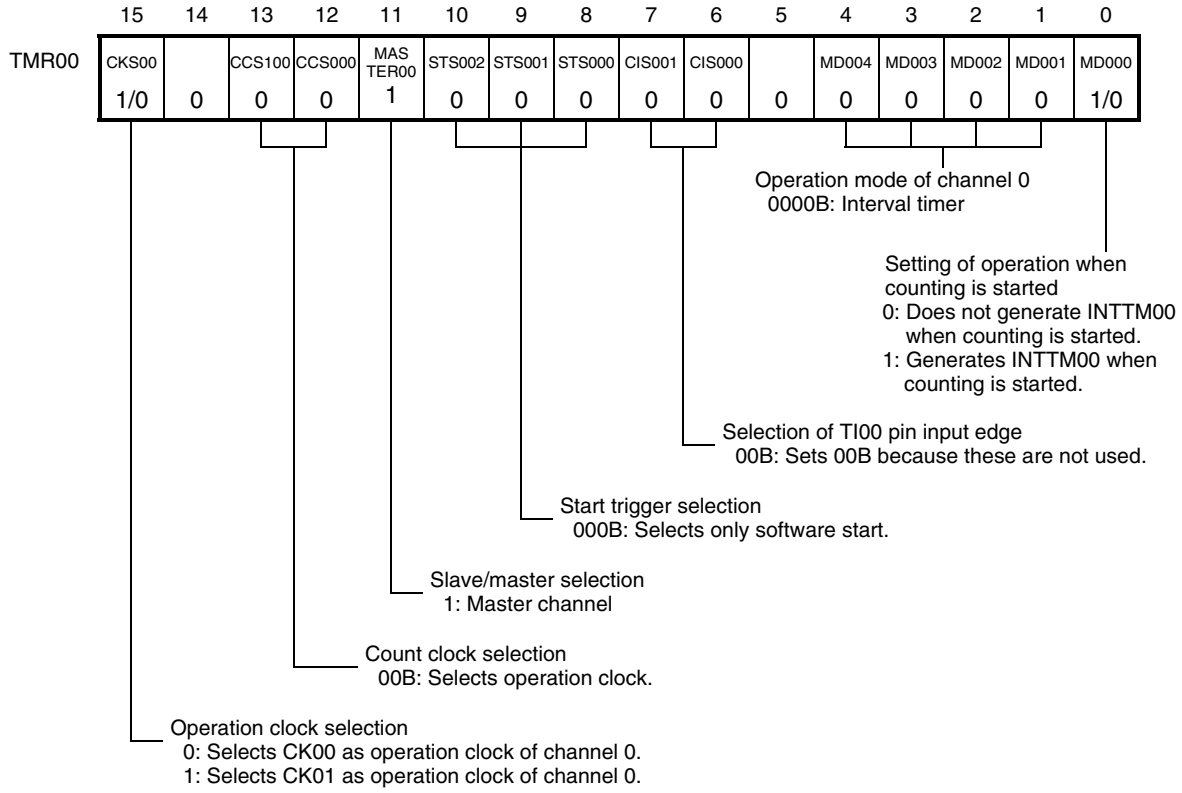

(b) Other registers

TOE0:TOE00	0: Stops the TO00 output operation by counting operation.
TO0:TO00	0: Outputs a low level from TO00.
TOM0:TOM00	0: Sets 0 when TOE00 = 0 (stops the TO00 output operation by counting operation).
TOT0:TOT00	0: Sets 0 when TOM00 = 0 (master channel output mode).
TOL0:TOL00	0: Sets 0 when TOM00 = 0 (master channel output mode).
TDE0:TDE00	0: Stops dead time control.
TRE0:TRE00	0: Stops real-time output.
TRO0:TRO00	0: Sets 0 when TRE00 = 0 (stops real-time output).
TRC0:TRC00	0: Does not operate as the real-time output trigger generation channel.
TME0:TME00	0: Stops modulated output.

Figure 7-75. Example of Set Contents of Registers When Linked Real-Time Output Function (Type 3) (Slave Channel 1) Is Used

(a) Timer mode register n (TMRn) of slave channel 1 (real-time output trigger generation channel (TRCn = 1))

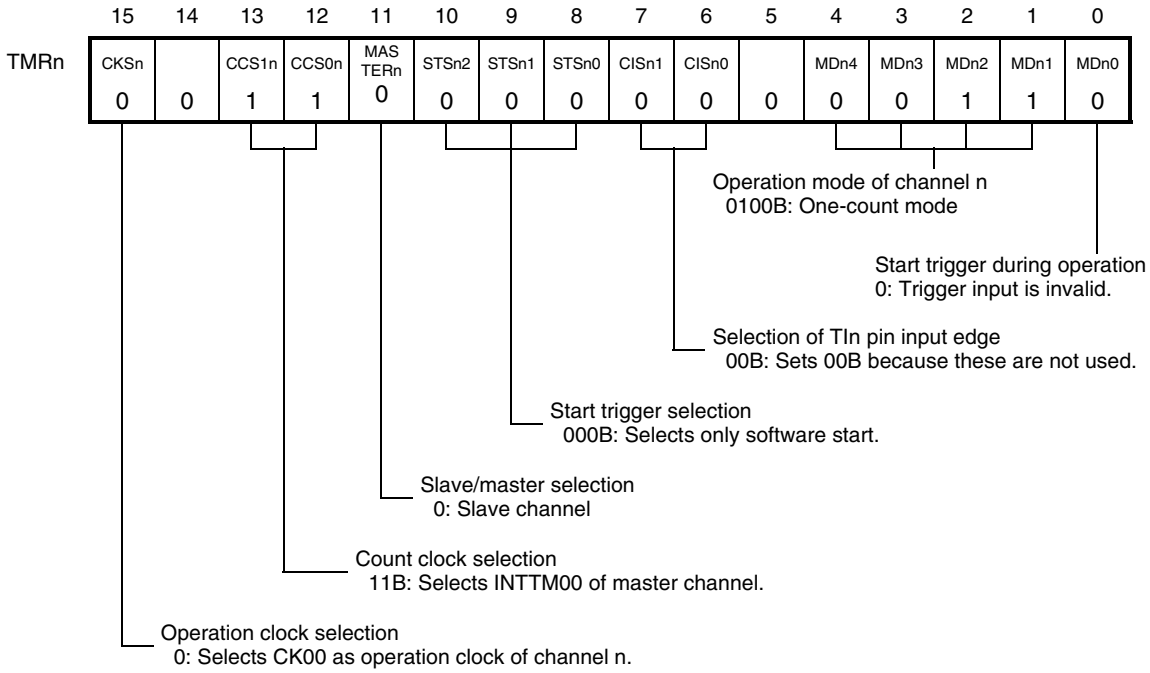

(b) Other registers of slave channel 1 (real-time output trigger generation channel (TRCn = 1))

TOE0:TOEn	0: Stops the TOn output operation by counting operation. 1: Enables the TOn output operation by counting operation.
TO0:TOn	0: Outputs a low level from TOn. 1: Outputs a high level from TOn.
TOM0:TOMn	0: Master channel output mode
TOT0:TOTn	0: Sets 0 when TOMn = 0 (master channel output mode).
TOL0:TOLn	0: Sets 0 when TOMn = 0 (master channel output mode).
TDE0:TDEn	0: Stops dead time control.
TRE0:TREn	0: Stops real-time output. 1: Enables real-time output.
TRO0:TROn	0: Outputs a low level as real-time output. 1: Outputs a high level as real-time output.
TRC0:TRCn	1: Operates as the real-time output trigger generation channel.
TME0:TMEn	0: Stops modulated output.

Remark n = 01

Figure 7-76. Example of Set Contents of Registers When Linked Real-Time Output Function (Type 3) (Slave Channels 2 to 7) Is Used

(a) Timer mode register m (TMRm) of slave channels 2 to 7 (real-time output channel (TRCm = 0))

With the linked real-time output function (type 3), TMRm of the channel when TRCm is set to 0 can be set arbitrarily.

(b) Other registers of slave channels 2 to 7 (real-time output channel (TRCm = 0))

TOE0:TOEm	0: Stops the TOm output operation by real-time output operation. 1: Enables the TOm output operation by real-time output operation.
TO0:TOm	0: Outputs a low level from TOm. 1: Outputs a high level from TOm.
TOM0:TOMm	0: Sets 0 when TREm = 1 (enables real-time output).
TOT0:TOTm	0: Sets 0 when TOMm = 0 (master channel output mode).
TOL0:TOLm	0: Sets 0 when TOMm = 0 (master channel output mode).
TDE0:TDEm	0: Stops dead time control.
TRE0:TREm	1: Enables real-time output.
TRO0:TROm	0: Outputs a low level as real-time output. 1: Outputs a high level as real-time output.
TRC0:TRCm	0: Does not operate as the real-time output trigger generation channel.
TME0:TMEm	0: Stops modulated output.

Remark m = 02 to 07

Figure 7-77. Operation Procedure of Linked Real-Time Output Function (Type 3) (1/2)

	Software Operation	Hardware Status
TAUS default setting		Power-off status (Clock supply is stopped and writing to each register is disabled.)
	Sets the TAU0EN and TAUOPEN bits of the PER2 register to 1. →	Power-on status. Each channel stops operating. (Clock supply is started and writing to each register is enabled.)
	Sets the TPS0 register. Determines clock frequencies of CK00 and CK01.	
Channel default setting	Sets the TMR00 and TMRn registers of each channel to be used (determines operation mode of channels). An interval (period) value is set to the TDR00 register of the master channel, and the period from setting TSn to "1" until INTTMn output is set to the TDRn register of the slave channel 1.	Channel stops operating. (Clock is supplied and some power is consumed.)
	[Real-time output trigger generation channel (slave 1)] Sets the TRCn bit to 1 (trigger generation channel). Sets the TREn bit to 1 (real-time output enable). [Real-time output channel (slave 2 to 7)] Sets the TRCm bit to 0 (non-trigger generation channel). Sets the TREm bit to 1 (real-time output enable).	The TOn and TOm pins go into Hi-Z output state.
	Sets the TOEn and TOEm bits to 1 and enables output of TOn and TOm. →	TOn and TOm do not change because channel has stopped operating.
	Clears the port register and port mode register to 0. →	The TOn and TOm pins output the TOn and TOm set levels.
Operation start	Sets the TOEn (slave 1) and TOEm (slave 2 to 7) bits to 1 (only when operation is resumed). The TS00 (master) and TSn (slave 1) bits of the TS0 register are set to 1 at the same time. → The TS00 and TSn bits automatically return to 0 because they are trigger bits.	TE00 = 1, TEn = 1 When the master channel starts counting, INTTM00 is generated. At the slave channel 1 enters a state to wait for start trigger (TSn = 1).

Remark n = 01
m = 02 to 07

Operation is resumed. (from next page)

Figure 7-77. Operation Procedure of Linked Real-Time Output Function (Type 3) (2/2)

Operation is resumed. (to forward page)

	Software Operation	Hardware Status
During operation	Set value of the TDR00 and TDRn registers can be changed. The TCR00 and TCRn registers can always be read. Set values of the TROn and TROm bits can be changed.	The counter of the master channel loads the TDR00 value to TCR00 and counts down. When the count value reaches TCR00 = 0000H, INTTM00 is generated. At the same time, the value of the TDR00 register is loaded to TCR00, and the counter starts counting down again. At slave channel 1, the value of the TDRn register is transferred to TCRn, triggered by TSn = 1, and the counter starts counting down. When the counter has counted down to 0000H, INTTMn is output and the counting operation is stopped. After that, the above operation is repeated. The set value of TROm of the slave channels 2 to 7 (real-time output channel) is output from TOm at the INTTMn output timing.
Operation stop	The TT00 (master) and TTn (slave 1) bits are set to 1 at the same time. →	TE00, TEn = 0, and count operation stops. TCR00 and TCRn hold count value and stops. The TOn and TOm output is not initialized but holds current status.
	The TT00 and TTn bits automatically return to 0 because they are trigger bits.	
	The TOEn and TOEm bits are cleared to 0 and values are set to TOn and TOm. →	The set values of TOn and TOm initialize the outputs of TOn and TOm.
TAUS stop	To hold the TOn and TOm pin output levels Clears the TOn and TOm bits to 0 after the values to be held are set to the port register. →	The TOn and TOm pin output levels are held by port function.
	When holding the TOn and TOm pin output levels is not necessary Switches the port mode register to input mode. →	The TOn and TOm pin output levels go into Hi-Z output state.
	The TAU0EN and TAUOPEN bits of the PER2 register are cleared to 0. →	Power-off status All circuits are initialized and SFR of each channel is also initialized. (The TOn and TOm bits are cleared to 0 and the TOn and TOm pins are set to port mode.)

Remark n = 01
m = 02 to 07

7.5.13 Operation as non-complementary modulation output function (type 1)

The 120° excitation method is an inverter control method used for 3-phase brushless DC motors. The non-complementary modulation output function (type 1) can be used to realize this method. The non-complementary modulation output function sets six duty widths for one period and generates a 6 or 3 PWM output. One period generation channel and six duty generation channels are prepared (6-phase PWM output function). Channel 0 is used for generating the cycle and channels 2 to 7 are used for generating the duty (6-phase PWM output function). See **7.5.3 Operation as 6-phase PWM output function** for details of the 6-phase PWM function.

The output is modulated in accordance with the TROm value corresponding to the TOm pin that generates the PWM waveform. Channel 1 should therefore be set as the real-time output trigger generation channel. See **7.5.10 Operation as linked real-time output function (type 1)** for details of real-time output triggers.

Non-complementary modulation output is generated by using PWM, which is generated using the 6-phase PWM output function, the TROm output, which is generated by the linked real-time function (type 1), and manipulation of the TMEm bit of timer modulation output enable register 0 (TME0).

The master channel operates in the interval timer mode and counts the periods.

Slave channel 1 operates in one-count mode and generates a real-time output trigger. To match the real-time output trigger generation timing (TROm reflection timing) and the active timing of PWM generated by slave channels 2 to 7, set TDR01 to 0000H and operate slave channel 1.

Slave channels 2 to 7 operate in one-count mode, count the duty factor, and generate 6-phase PWM waveforms.

Furthermore, modulation output is controlled by manipulating TMEm. Non-complementary modulation output can be performed by outputting from the TOm pin the logical product of the PWM and real-time outputs when TMEm is “1”. When TMEm is “0”, the real-time output setting value (TROm) will be output from the TOm pin.

To modulate the PWM and real-time outputs and output them from the TOm pin, operation must be started with the default level of TOm of slave channels 2 to 7 at low level. TOLm of slave channels 2 to 7 is assumed to be fixed to “0”, and TLS2 to TLS7 (OPMR registers) are used if inversion control is required.

Modulation control of the PWM and real-time outputs is performed when TROm being “1” (active level: high level). Modulation output of the PWM output isn’t performed when TROm set to “0”.

Caution **TS00, TS01, or TSm cannot be set to “1” (forcible restart) while TE00 = 1, TE01 = 1, or TEm = 1. If TS00, TS01, or TSm is set to “1” while TE00 = 1, TE01 = 1, or TEm = 1, the counter value (TCR00, TCR01, or TCRm) will be illegal and TOm will not be able to output the expected waveform.**

Remark m = 02 to 07

Figure 7-78. Block Diagram of Operation as Non-complementary Modulation Output Function (Type 1)

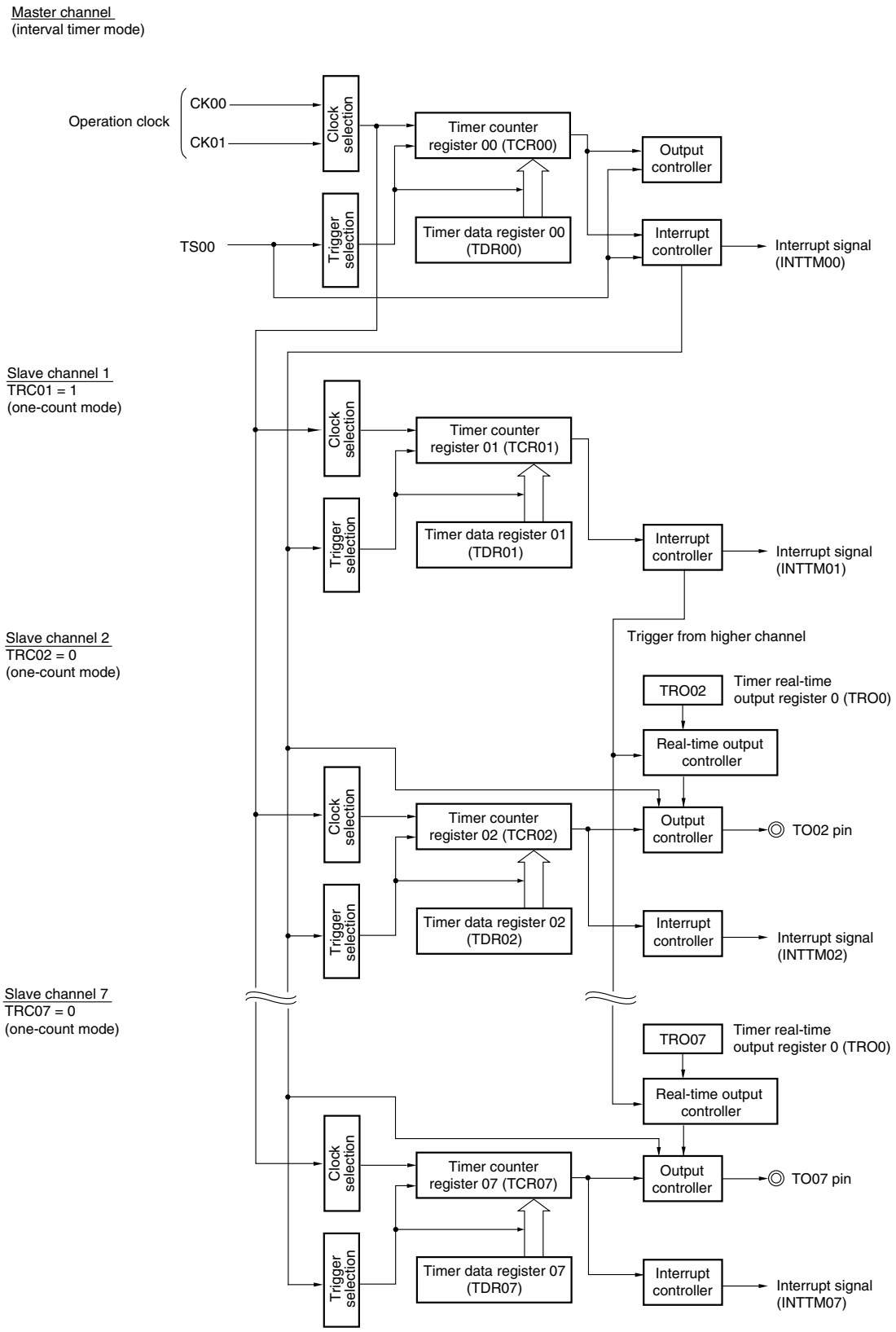

Figure 7-79. Example of Basic Timing of Operation as Non-complementary Modulation Output Function (Type 1) (Default setting : TOm = 0)

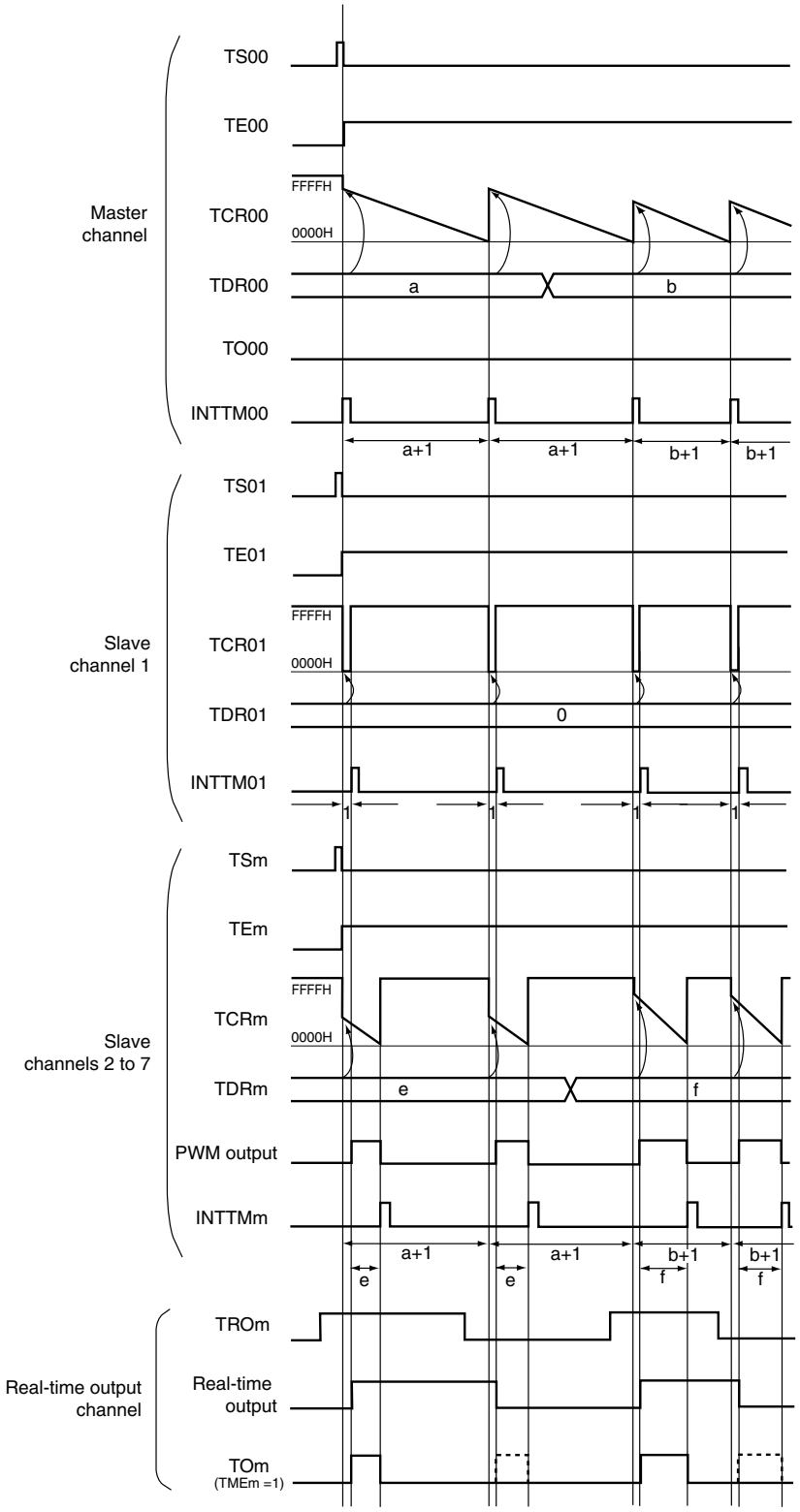

Remark m = 02 to 07

An example of using non-complementary excitation to achieve 120º excitation control of a 3-phase brushless DC motor is shown in Figure 7-80 below.

Figure 7-80. Example of using non-complementary excitation to achieve 120º excitation control of a 3-phase brushless DC motor (Active High)

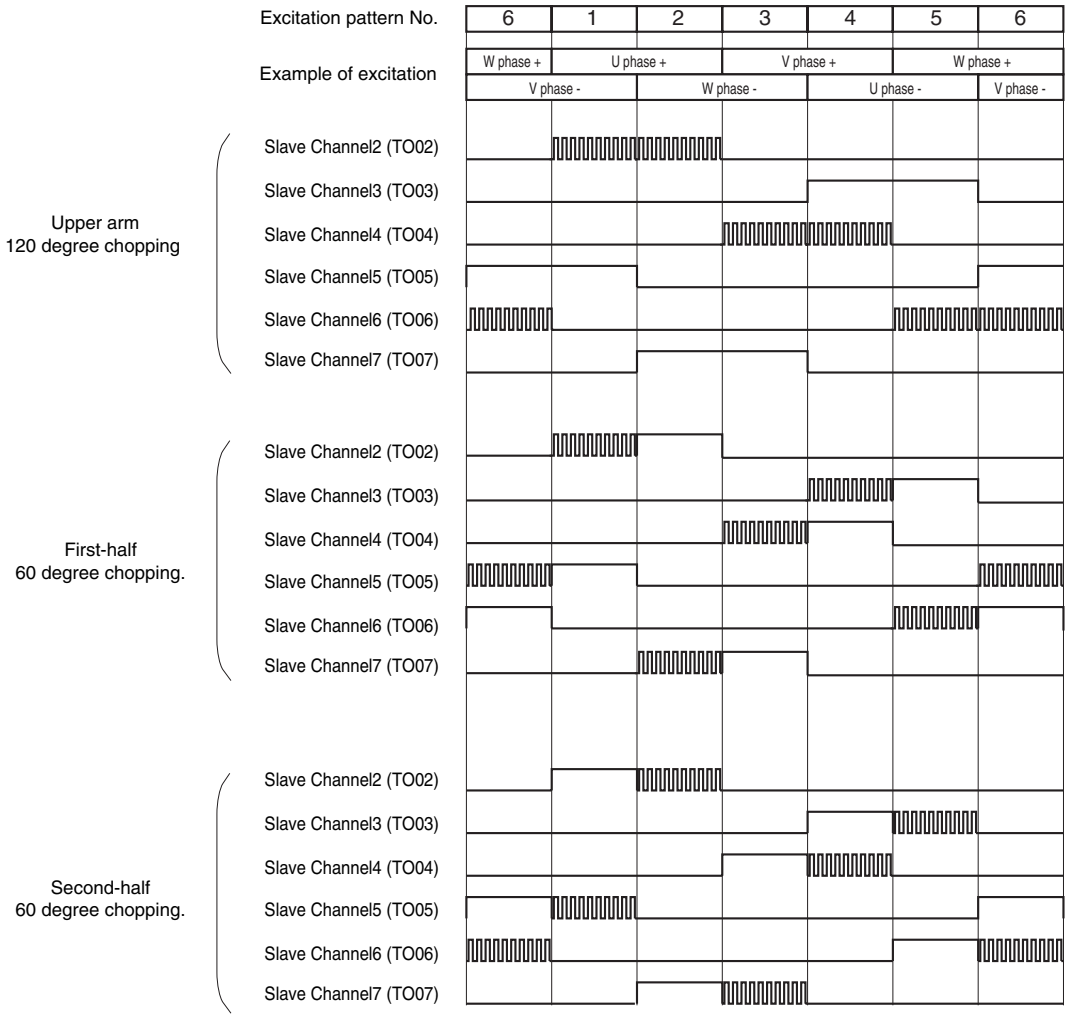

An example of the combinations of TROm and TMEm when using the non-complementary modulation output function (type 1) is shown below (active high).

TROm and TMEm change during timer operation because the excitation patterns switch in 120 degree chopping, first-half 60 degree chopping, or second-half 60° chopping.

Table 7-2. Example of using non-complementary excitation to achieve 120 degree excitation control

(Upper arm 120 degree chopping)

Excitation No.	Control Register	Set Value of TROm, TMEm						TOm Output					
		Slave 2	Slave 3	Slave 4	Slave 5	Slave 6	Slave 7	Slave 2	Slave 3	Slave 4	Slave 5	Slave 6	Slave 7
1	TROm	1	0	0	1	0	0	PWM	Low	Low	High	Low	Low
	TMEm	1	0	1	0	1	0						
2	TROm	1	0	0	0	0	1	PWM	Low	Low	Low	Low	High
	TMEm	1	0	1	0	1	0						
3	TROm	0	0	1	0	0	1	Low	Low	PWM	Low	Low	High
	TMEm	1	0	1	0	1	0						
4	TROm	0	1	1	0	0	0	Low	High	PWM	Low	Low	Low
	TMEm	1	0	1	0	1	0						
5	TROm	0	1	0	0	1	0	Low	High	Low	Low	PWM	Low
	TMEm	1	0	1	0	1	0						
6	TROm	0	0	0	1	1	0	Low	Low	Low	High	PWM	Low
	TMEm	1	0	1	0	1	0						

Table 7-3. Example of using non-complementary excitation to achieve 120 degree excitation control

(First-half 60 degree chopping)

Excitation No.	Control Register	Set Value of TROm, TMEm						TOm Output					
		Slave 2	Slave 3	Slave 4	Slave 5	Slave 6	Slave 7	Slave 2	Slave 3	Slave 4	Slave 5	Slave 6	Slave 7
1	TROm	1	0	0	1	0	0	PWM	Low	Low	High	Low	Low
	TMEm	1	1	1	0	1	1						
2	TROm	1	0	0	0	0	1	High	Low	Low	Low	Low	PWM
	TMEm	0	1	1	1	1	1						
3	TROm	0	0	1	0	0	1	Low	Low	PWM	Low	Low	High
	TMEm	1	1	1	1	1	0						
4	TROm	0	1	1	0	0	0	Low	PWM	High	Low	Low	Low
	TMEm	1	1	0	1	1	1						
5	TROm	0	1	0	0	1	0	Low	High	Low	Low	PWM	Low
	TMEm	1	0	1	1	1	1						
6	TROm	0	0	0	1	1	0	Low	Low	Low	PWM	High	Low
	TMEm	1	1	1	1	0	1						

Remark m = 02 to 07

Table 7-4. Example of using non-complementary excitation to achieve 120 degree excitation control (Second-half 60 degree chopping)

Excitation No.	Control Register	Set Value of TROm, TMEm						TOm Output					
		Slave 2	Slave 3	Slave 4	Slave 5	Slave 6	Slave 7	Slave 2	Slave 3	Slave 4	Slave 5	Slave 6	Slave 7
1	TROm	1	0	0	1	0	0	High	Low	Low	PWM	Low	Low
	TMEm	0	0	0	1	0	0						
2	TROm	1	0	0	0	0	1	PWM	Low	Low	Low	Low	High
	TMEm	1	0	0	0	0	0						
3	TROm	0	0	1	0	0	1	Low	Low	High	Low	Low	PWM
	TMEm	0	0	0	0	0	1						
4	TROm	0	1	1	0	0	0	Low	High	PWM	Low	Low	Low
	TMEm	0	0	1	0	0	0						
5	TROm	0	1	0	0	1	0	Low	PWM	Low	Low	High	Low
	TMEm	0	1	0	0	0	0						
6	TROm	0	0	0	1	1	0	Low	Low	Low	High	PWM	Low
	TMEm	0	0	0	0	1	0						

Remark m = 02 to 07

Figure 7-81. Example of Set Contents of Registers
When Non-complementary Modulation Output Function (Type 1) (Master Channel) Is Used

(a) Timer mode register 00 (TMR00)

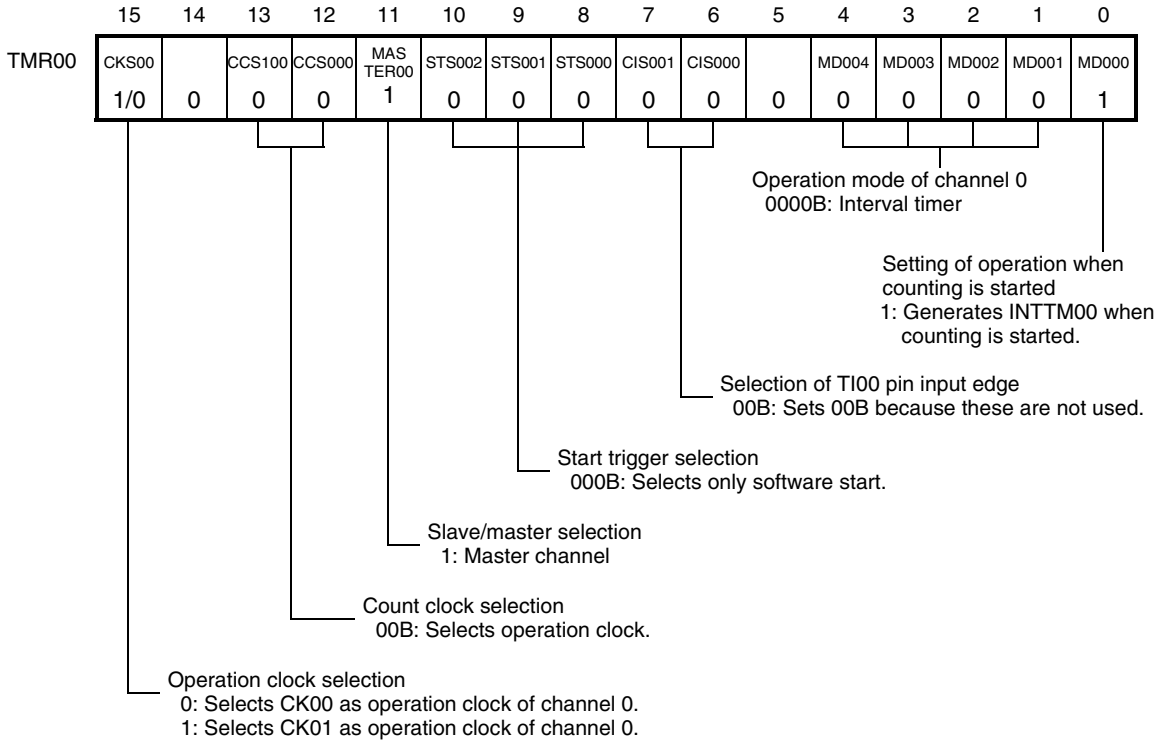

(b) Other registers

TOE0:TOE00	0: Stops the TO00 output operation by counting operation.
TO0:TO00	0: Outputs a low level from TO00.
TOM0:TOM00	0: Sets 0 when TOE00 = 0 (stops the TO00 output operation by counting operation).
TOT0:TOT00	0: Sets 0 when TOM00 = 0 (master channel output mode).
TOL0:TOL00	0: Sets 0 when TOM00 = 0 (master channel output mode).
TDE0:TDE00	0: Stops dead time control.
TRE0:TRE00	0: Stops real-time output.
TRO0:TRO00	0: Sets 0 when TRE00 = 0 (stops real-time output).
TRC0:TRC00	0: Does not operate as the real-time output trigger generation channel.
TME0:TME00	0: Stops modulated output.

Figure 7-82. Example of Set Contents of Registers When Non-complementary Modulation Output Function (Type 1) (Slave Channel 1) Is Used

(a) Timer mode register 01 (TMR01) of slave channel 1 (real-time output trigger generation channel (TRC01 = 1))

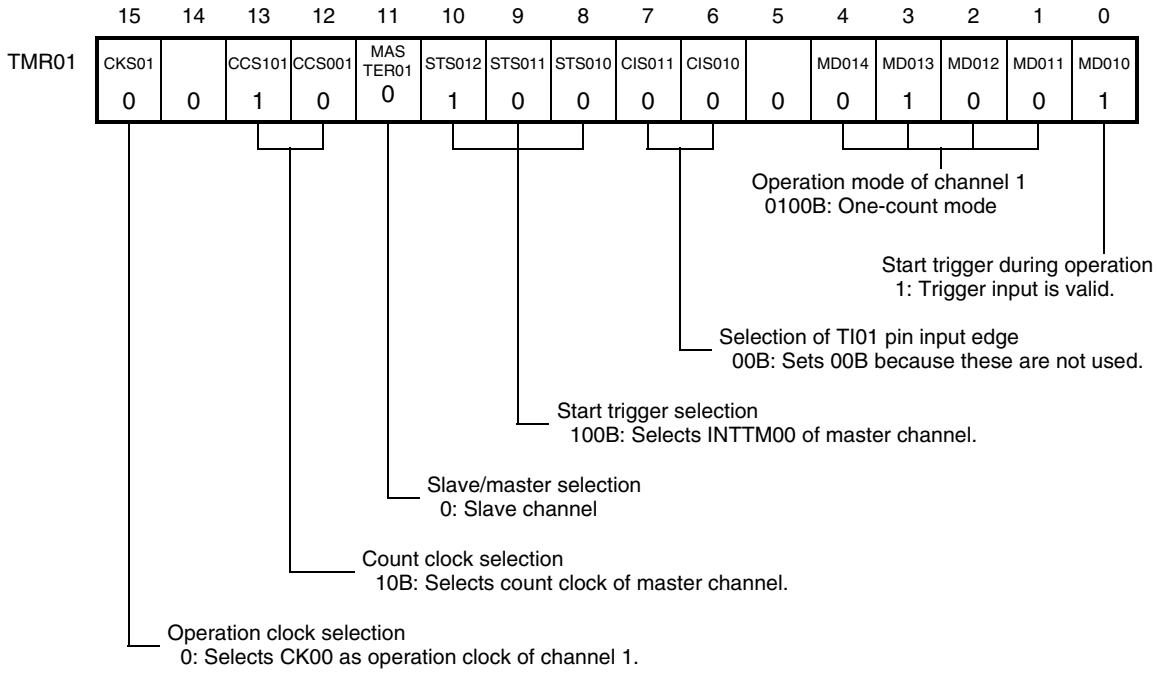

(b) Other registers of slave channel 1 (real-time output trigger generation channel (TRC01 = 1))

TOE0:TOE01	0: Stops the TO01 output operation by counting operation.
TO0:TO01	0: Outputs a low level from TO01.
TOM0:TOM01	0: Sets 0 when TOE01 = 0 (stops the TO01 output operation by counting operation).
TOT0:TOT01	0: Sets 0 when TOM01 = 0 (master channel output mode).
TOL0:TOL01	0: Sets 0 when TOM01 = 0 (master channel output mode).
TDE0:TDE01	0: Stops dead time control.
TRE0:TRE01	0: Stops real-time output.
TRO0:TRO01	0: Sets 0 when TRE01 = 0 (stops real-time output).
TRC0:TRC01	1: Operates as the real-time output trigger generation channel.
TME0:TME01	0: Stops modulated output.

Figure 7-83. Example of Set Contents of Registers
When Non-complementary Modulation Output Function (Type 1) (Slave Channels 2 to 7) Is Used

(a) Timer mode register m (TMRm) of slave channels 2 to 7 (real-time output channel (TRCm = 0))

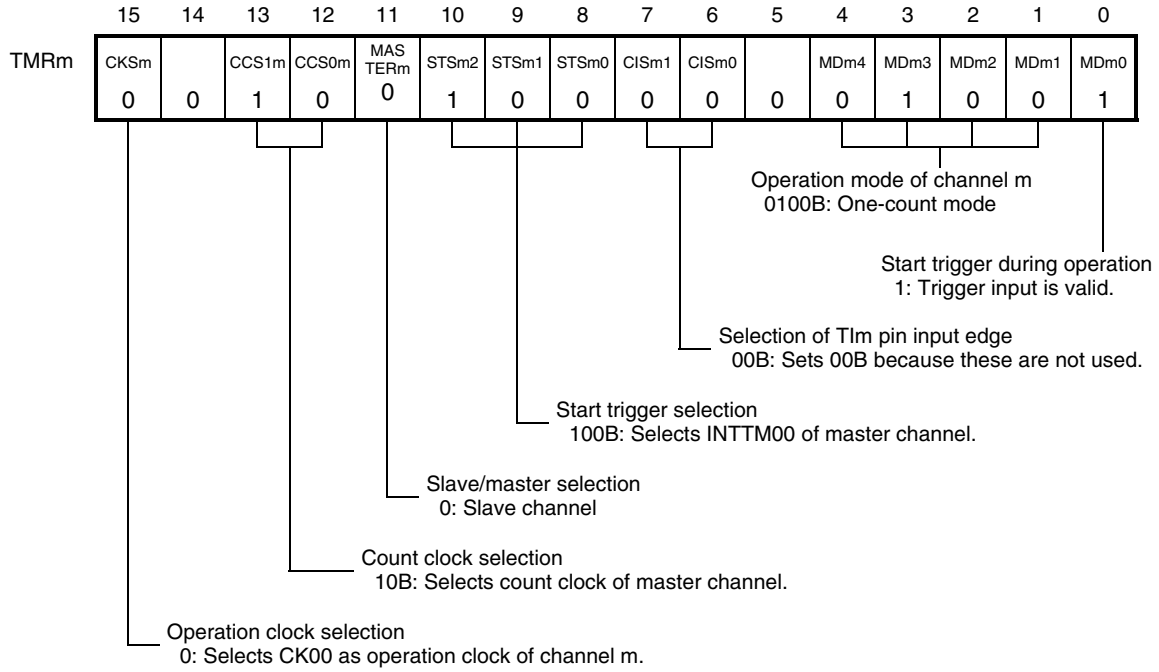

(b) Other registers of slave channels 2 to 7 (real-time output channel (TRCm = 0))

TOE0:TOEm	0: Stops the TOm output operation by counting operation. 1: Enables the TOm output operation by counting operation.
TO0:TOm	0: Outputs a low level from TOm. 1: Outputs a high level from TOm.
TOM0:TOMm	1: Sets slave channel output mode.
TOT0:TOTm	0: Generates other than triangular wave PWM output.
TOL0:TOLm	0: Positive logic output (active-high)
TDE0:TDEm	0: Stops dead time control.
TRE0:TREm	1: Enables real-time output.
TRO0:TROm	0: Outputs a low level as real-time output. 1: Outputs a high level as real-time output.
TRC0:TRCm	0: Does not operate as the real-time output trigger generation channel.
TME0:TMEm	0: Stops modulated output. 1: Enables modulated output.

Remark m = 02 to 07

Figure 7-84. Operation Procedure When Non-complementary Modulation Output Function (Type 1) Is Used (1/2)

	Software Operation	Hardware Status
TAUS default setting		Power-off status (Clock supply is stopped and writing to each register is disabled.)
	Sets the TAU0EN and TAUOPEN bits of the PER2 register to 1. →	Power-on status. Each channel stops operating. (Clock supply is started and writing to each register is enabled.)
	Sets the TPS0 register. Determines clock frequencies of CK00 and CK01.	
Channel default setting	Sets the TMR00, TMR01, and TMRm registers of eight channels to be used (determines operation mode of channels). An interval (period) value is set to the TDR00 register of the master channel, 0000H is set to the TDR01 register of slave channel 1, and a duty factor is set to the TDRm register of slave channel m.	Channel stops operating. (Clock is supplied and some power is consumed.)
	Sets slave channel 1. Sets the TRC01 bit to 1 (trigger generation channel). Sets slave channels 2 to 7. Sets the TOMm bit to 1 (slave channel output mode). Sets the TOTm bit to 0 (generates other than triangular wave PWM output). Sets the TOLm bit and determines the active level of the TOm output. Sets the TDEm bit to 0 (stops dead time control). Sets the TREm bit to 1 (real-time output enable). Real-time output level is set to the TROm bit. Sets the TRCm bit to 0 (non-trigger generation channel). Sets the TMEm bit and determines the modulated output control.	The TOm pin goes into Hi-Z output state.
	Sets the TOm bit and determines default level of the TOm output. →	The TOm default setting level is output when the port mode register is in output mode and the port register is 0.
	Sets the TOEm bit to 1 and enables operation of TOm. →	TOm does not change because channel has stopped operating.
	Clears the port register and port mode register to 0. →	The TOm pin outputs the TOm set level.

Remark m = 02 to 07

Figure 7-84. Operation Procedure When Non-complementary Modulation Output Function (Type 1) Is Used (2/2)

Operation is resumed.

	Software Operation	Hardware Status
Operation start	Sets TOEm (slaves 2 to 7) to 1 (only when operation is resumed). The TS00 (master), TS01 (slave 1), and TSm (slaves 2 to 7) bits of the TS0 register are set to 1 at the same time. →	TE00 = 1, TE01 = 1, TEm = 1 When the master channel starts counting, INTTM00 is generated. Triggered by this interrupt, the slave channels 1 to 7 also start counting.
	The TS00, TS01, and TSm bits automatically return to 0 because they are trigger bits.	
During operation	Set values of the TDR00, TDR01, and TDRm registers can be changed after INTTM00 of the master channel is generated. The TCR00, TCR01, and TCRm registers can always be read. Set values of the TROm and TMEm registers can be changed.	6-phase PWM output is performed by the master channel and slave channels 2 to 7. At slave channel 1, the values of the TDR01 register are transferred to TCR01, triggered by INTTM00 of the master channel, and the counter starts counting down. Slave channels 2 to 7 perform real-time output by using the INTTM01 signal of slave channel 1. Non-complementary modulation output of the PWM and real-time outputs is performed according to setting of TMEm. After that, the above operation is repeated.
Operation stop	The TT00 (master), TT01 (slave 1), and TTm (slaves 2 to 7) bits are set to 1 at the same time. →	TE00, TE01, TEm = 0, and count operation stops.
	The TT00, TT01, and TTm bits automatically return to 0 because they are trigger bits.	TCR00, TCR01, and TCRm hold count value and stops. The TOm output is not initialized but holds current status.
	The TOEm bits of slave channels 2 to 7 are cleared to 0 and value is set to the TOm bit. →	The TOm pin outputs the TOm set level.
TAUS stop	To hold the TOm pin output level Clears the TOm bit to 0 after the value to be held is set to the port register. →	The TOm pin output level is held by port function.
	When holding the TOm pin output level is not necessary Switches the port mode register to input mode. →	The TOm pin output level goes into Hi-Z output state.
	The TAU0EN and TAUOPEN bits of the PER2 register are cleared to 0. →	Power-off status All circuits are initialized and SFR of each channel is also initialized. (The TOm bit is cleared to 0 and the TOm pin is set to port mode.)

Remark m = 02 to 07

7.5.14 Operation as non-complementary modulation output function (type 2)

The 120 degree excitation method is an inverter control method used for 3-phase brushless DC motors. The non-complementary modulation output function (type 2) can be used to realize this method.

The non-complementary modulation output function sets six duty widths for one period and generates a 6 or 3 triangular wave modulation PWM output. One period generation channel and six duty generation channels are prepared. Channel 0 is used for generating the cycle and channels 2 to 7 are used for generating the duty. See **7.5.4 Operation as triangular wave PWM output function** for details of the triangular wave modulation PWM function.

The modulate output is modulated in accordance with the TROm value corresponding to the TOm pin that generates the PWM waveform. Channel 1 should therefore be set as the real-time output trigger generation channel. See **7.5.11 Operation as linked real-time output function (type 2)** for details of real-time output triggers.

Non-complementary modulation output is generated by using triangular wave modulation PWM, the TROm output, which is generated by the linked real-time function (type 2), and manipulation of the TMEm bit of timer modulation output enable register 0 (TME0).

The master channel operates in the interval timer mode and counts the periods.

Slave channel 1 operates in event counter mode and generates a real-time output trigger. The number of INTTM00 outputs of the master channel is thinned and a real-time output trigger is generated.

When using this function, set the thinning of INTTM0 to odd numbers (1, 3, 5, …).

Slave channels 2 to 7 operate in up and down count mode, count the duty factor, and generate triangular wave PWM waveforms.

Furthermore, modulation output can be controlled by manipulating TMEm. Non-complementary modulation output can be performed by outputting from the TOm pin the logical product of the PWM and real-time outputs when TMEm is “1”. When TMEm is “0”, the real-time output setting value (TROm) will be output from the TOm pin.

To modulate the PWM and real-time outputs and output them from the TOm pin, operation must be started with the default level of TOm of slave channels 2 to 7 at low level. TOLm of slave channels 2 to 7 is assumed to be fixed to “0”, and TLS2 to TLS7 (OPMR registers) are used if inversion control is required.

Modulation control of the PWM and real-time outputs is performed when TROm being “1” (active level: high level). Modulation output of the PWM output isn’t performed when TROm set to “0”.

Caution TS00, TS01, or TSm cannot be set to “1” (forcible restart) while TE00 = 1, TE01 = 1, or TEm = 1. If TS00, TS01, or TSm is set to “1” while TE00 = 1, TE01 = 1, or TEm = 1, the counter value (TCR00, TCR01, or TCRm) will be illegal and TOm will not be able to output the expected waveform.

Remark m = 02 to 07

Figure 7-85. Block Diagram of Operation as Non-complementary Modulation Output Function (Type 2)

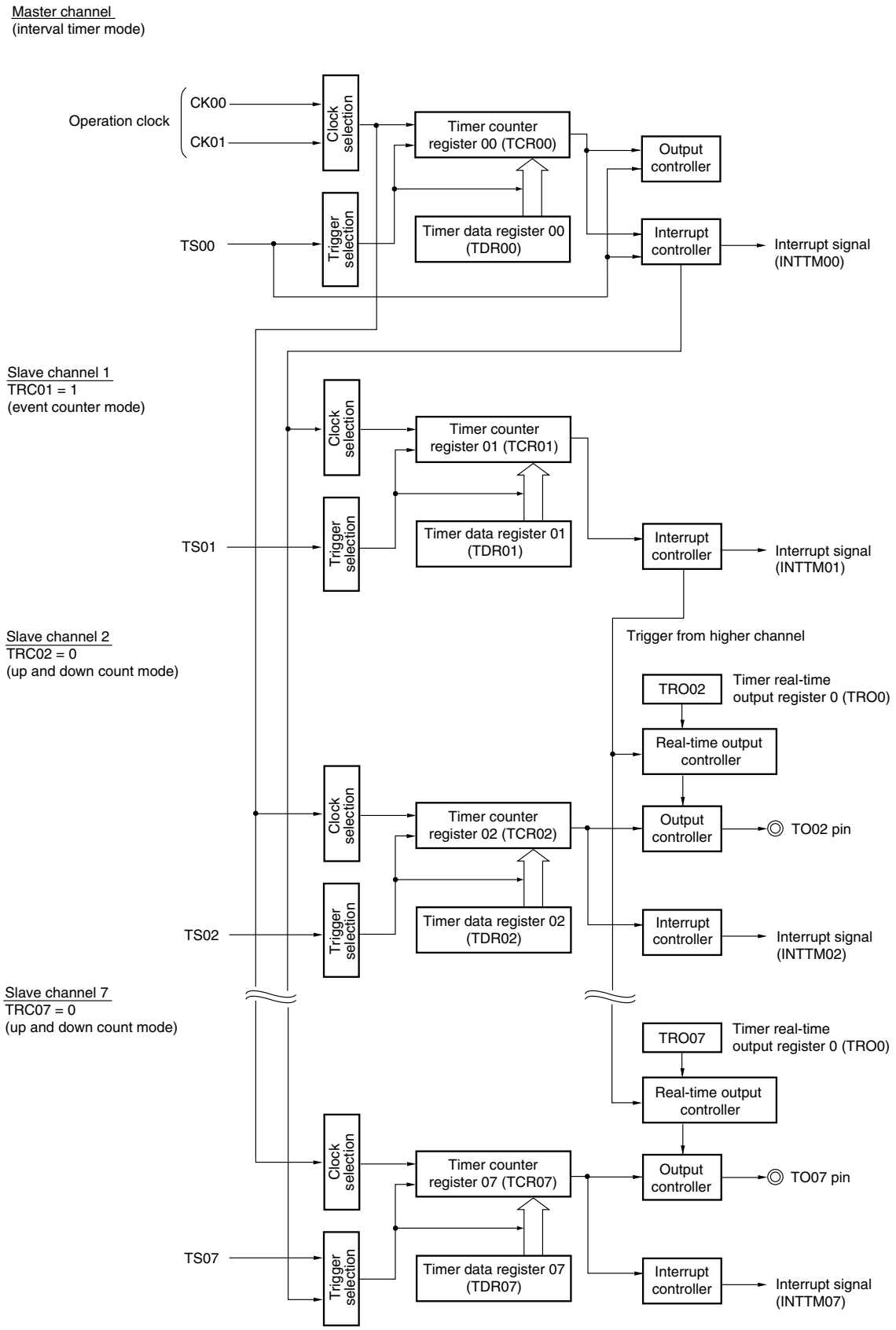

Figure 7-86. Example of Basic Timing of Operation as Non-complementary Modulation Output Function (Type 2)
(Default setting : TO00 = 1, TOm = 0, MD000 = 0)

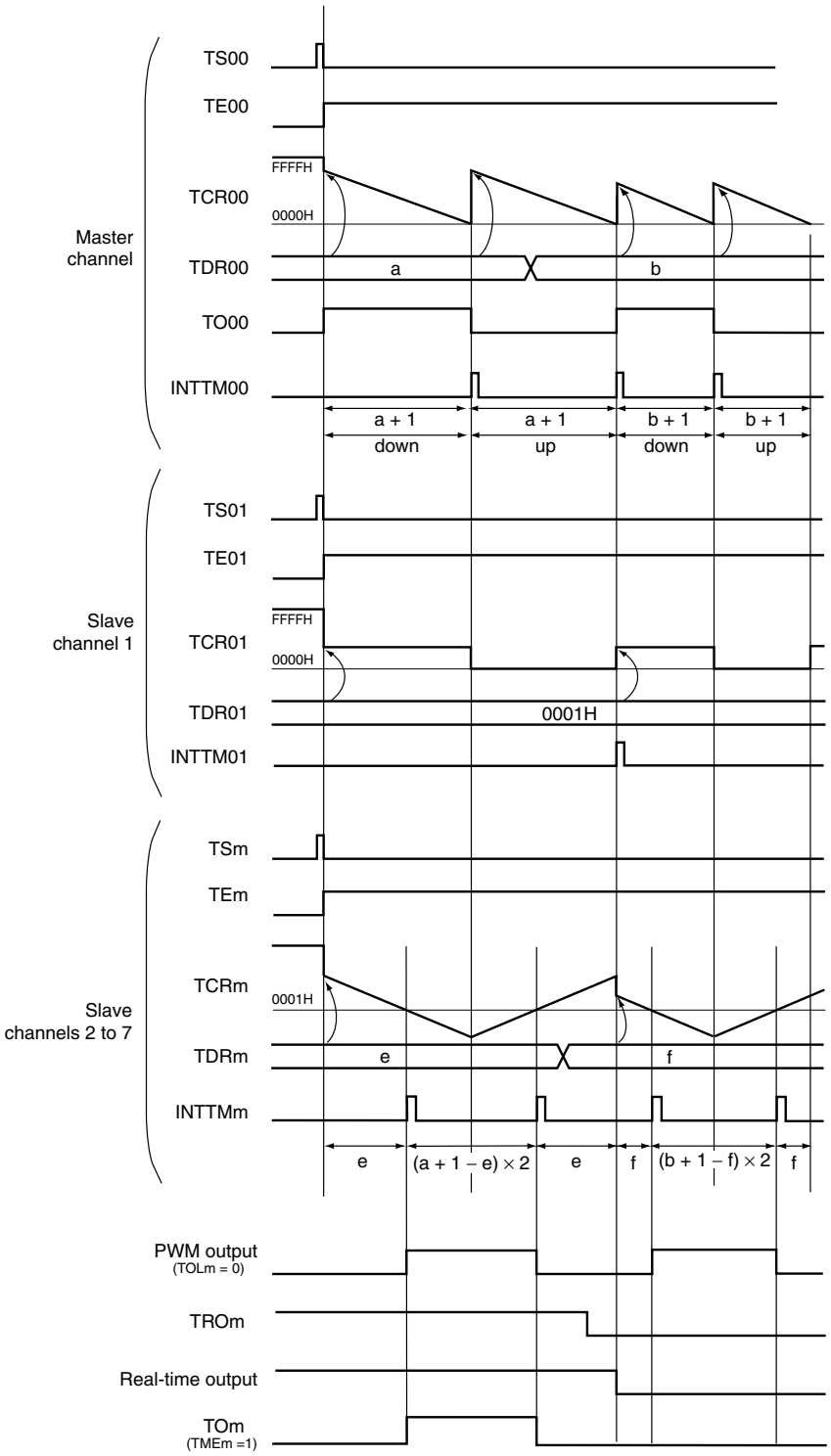

Remark m = 02 to 07

An example of using non-complementary excitation to achieve 120 degree excitation control of a 3-phase brushless DC motor is shown in Figure 7-87 below.

Figure 7-87. Example of using non-complementary excitation to achieve 120 degree excitation control of a 3-phase brushless DC motor

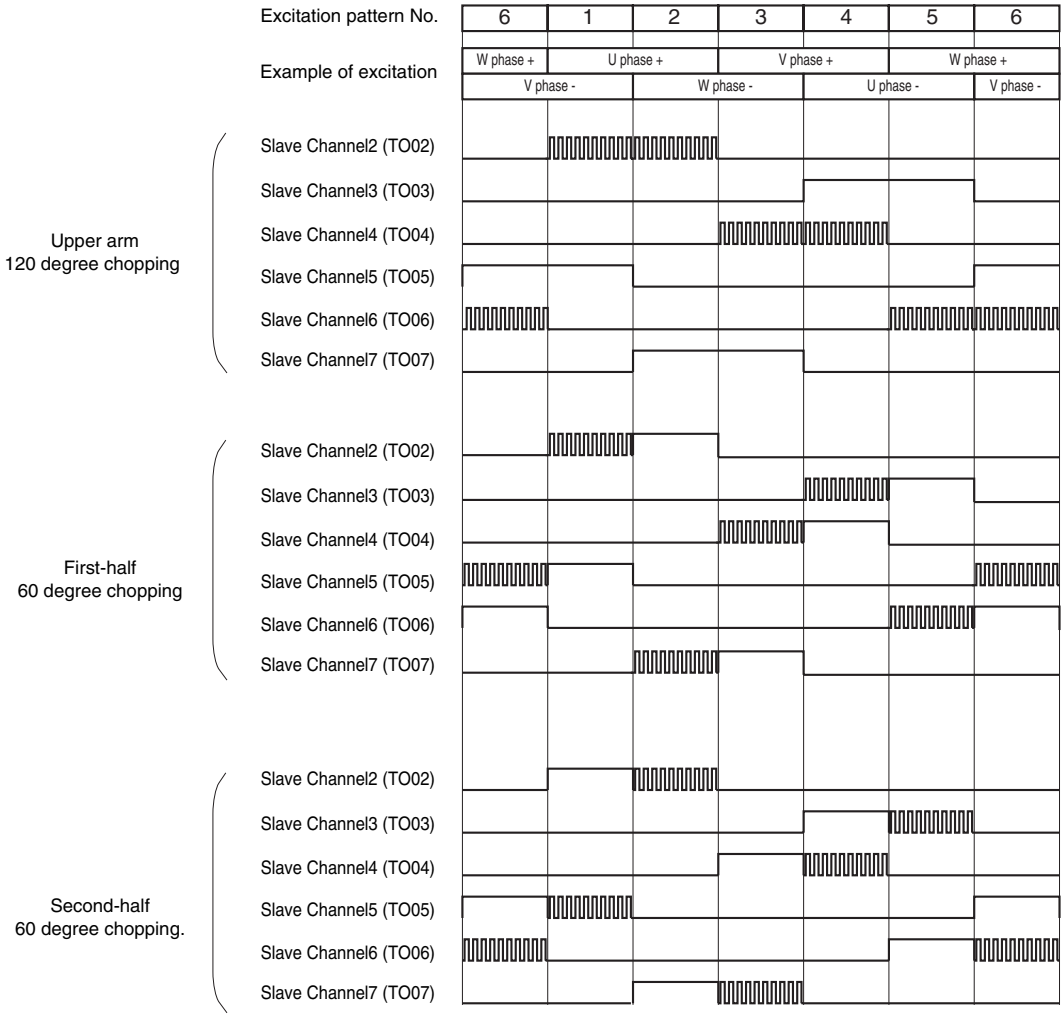

An example of the combinations of TROm and TMEm when using the non-complementary modulation output function (type 2) is shown below (active high).

TROm and TMEm change during timer operation because the excitation patterns switch in 120 degree chopping, first-half 60 degree chopping, or second-half 60° chopping.

Table 7-5. Example of using non-complementary excitation to achieve 120 degree excitation control

(Upper arm 120 degree chopping)

Excitation No.	Control Register	Set Value of TROm, TMEm						TOm Output					
		Slave 2	Slave 3	Slave 4	Slave 5	Slave 6	Slave 7	Slave 2	Slave 3	Slave 4	Slave 5	Slave 6	Slave 7
1	TROm	1	0	0	1	0	0	PWM	Low	Low	High	Low	Low
	TMEm	1	0	1	0	1	0						
2	TROm	1	0	0	0	0	1	PWM	Low	Low	Low	Low	High
	TMEm	1	0	1	0	1	0						
3	TROm	0	0	1	0	0	1	Low	Low	PWM	Low	Low	High
	TMEm	1	0	1	0	1	0						
4	TROm	0	1	1	0	0	0	Low	High	PWM	Low	Low	Low
	TMEm	1	0	1	0	1	0						
5	TROm	0	1	0	0	1	0	Low	High	Low	Low	PWM	Low
	TMEm	1	0	1	0	1	0						
6	TROm	0	0	0	1	1	0	Low	Low	Low	High	PWM	Low
	TMEm	1	0	1	0	1	0						

Table 7-6. Example of using non-complementary excitation to achieve 120 degree excitation control

(First-half 60 degree chopping)

Excitation No.	Control Register	Set Value of TROm, TMEm						TOm Output					
		Slave 2	Slave 3	Slave 4	Slave 5	Slave 6	Slave 7	Slave 2	Slave 3	Slave 4	Slave 5	Slave 6	Slave 7
1	TROm	1	0	0	1	0	0	PWM	Low	Low	High	Low	Low
	TMEm	1	1	1	1	1	1						
2	TROm	1	0	0	0	0	1	High	Low	Low	Low	Low	PWM
	TMEm	0	1	1	1	1	1						
3	TROm	0	0	1	0	0	1	Low	Low	PWM	Low	Low	High
	TMEm	1	1	1	1	1	0						
4	TROm	0	1	1	0	0	0	Low	PWM	High	Low	Low	Low
	TMEm	1	1	0	1	1	1						
5	TROm	0	1	0	0	1	0	Low	High	Low	Low	PWM	Low
	TMEm	1	0	1	0	1	1						
6	TROm	0	0	0	1	1	0	Low	Low	Low	PWM	High	Low
	TMEm	1	1	1	1	0	1						

Remark m = 02 to 07

Table 7-7. Example of using non-complementary excitation to achieve 120 degree excitation control (Second-half 60 degree chopping)

Excitation No.	Control Register	Set Value of TROm, TMEm						TOm Output					
		Slave 2	Slave 3	Slave 4	Slave 5	Slave 6	Slave 7	Slave 2	Slave 3	Slave 4	Slave 5	Slave 6	Slave 7
1	TROm	1	0	0	1	0	0	High	Low	Low	PWM	Low	Low
	TMEm	0	1	1	1	1	1						
2	TROm	1	0	0	0	0	1	PWM	Low	Low	Low	Low	High
	TMEm	1	1	1	1	1	0						
3	TROm	0	0	1	0	0	1	Low	Low	High	Low	Low	PWM
	TMEm	1	1	1	1	1	1						
4	TROm	0	1	1	0	0	0	Low	High	PWM	Low	Low	Low
	TMEm	1	0	1	1	1	1						
5	TROm	0	1	0	0	1	0	Low	PWM	Low	Low	High	Low
	TMEm	1	1	1	1	0	1						
6	TROm	0	0	0	1	1	0	Low	Low	Low	High	PWM	Low
	TMEm	1	1	1	0	1	1						

Remark m = 02 to 07

Figure 7-88. Example of Set Contents of Registers When Non-complementary Modulation Output Function (Type 2) (Master Channel) Is Used

(a) Timer mode register 00 (TMR00)

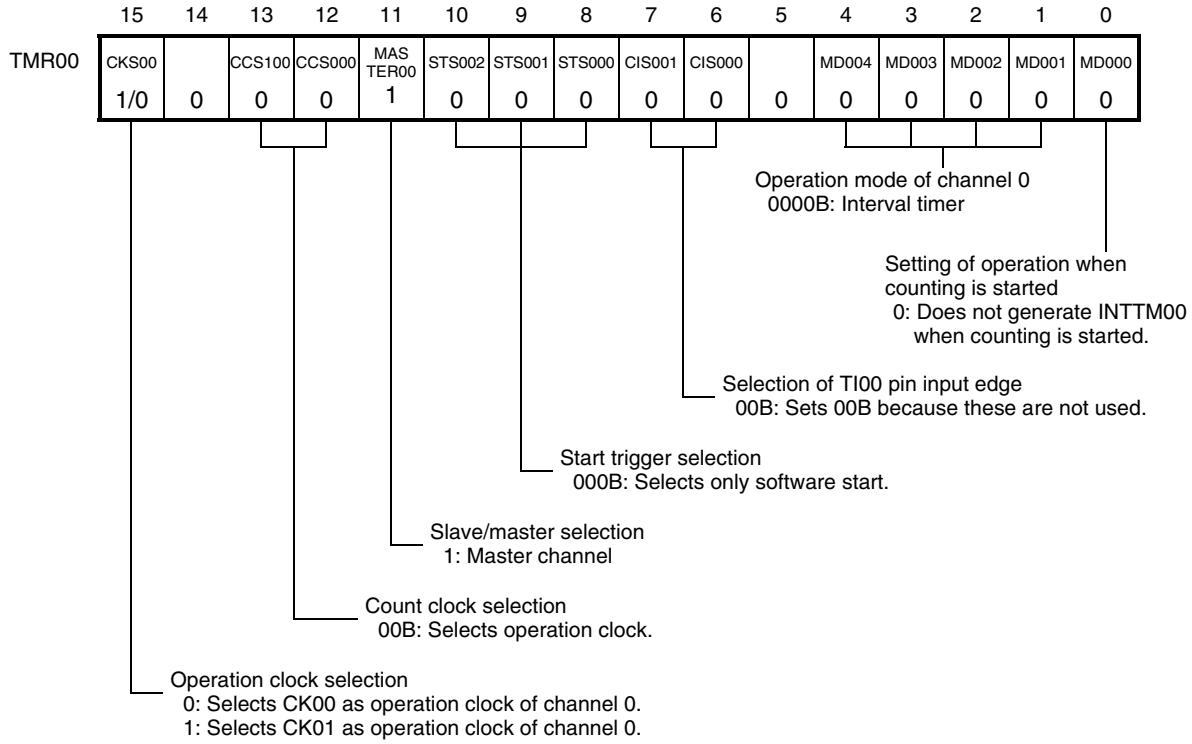

(b) Other registers

TOE0:TOE00 Note	0: Stops the TO00 output operation by counting operation. 1: Enables the TO00 output operation by counting operation.
TO0:TO00	1: Outputs a hight level from TO00.
TOM0:TOM00	0: Sets 0 when TOE00 = 0 (stops the TO00 output operation by counting operation).
TOT0:TOT00	0: Sets 0 when TOM00 = 0 (master channel output mode).
TOL0:TOL00	0: Sets 0 when TOM00 = 0 (master channel output mode).
TDE0:TDE00	0: Stops dead time control.
TRE0:TRE00	0: Stops real-time output.
TRO0:TRO00	0: Sets 0 when TRE00 = 0 (stops real-time output).
TRC0:TRC00	0: Does not operate as the real-time output trigger generation channel.
TME0:TME00	0: Stops modulated output.

Note Set TOE00 of the master channel to “1” in the following cases.

- When an INTTMM0, INTTMV0, INTTMM1, or INTTMV1 interrupt signal is used
- When Hi-Z output is controlled or an A/D conversion trigger is selected via control by using the OPMR, OPHS, or OPHT register

Figure 7-89. Example of Set Contents of Registers When Non-complementary Modulation Output Function (Type 2) (Slave Channel 1) Is Used

(a) Timer mode register 01 (TMR01) of slave channel 1 (real-time output trigger generation channel (TRC01 = 1))

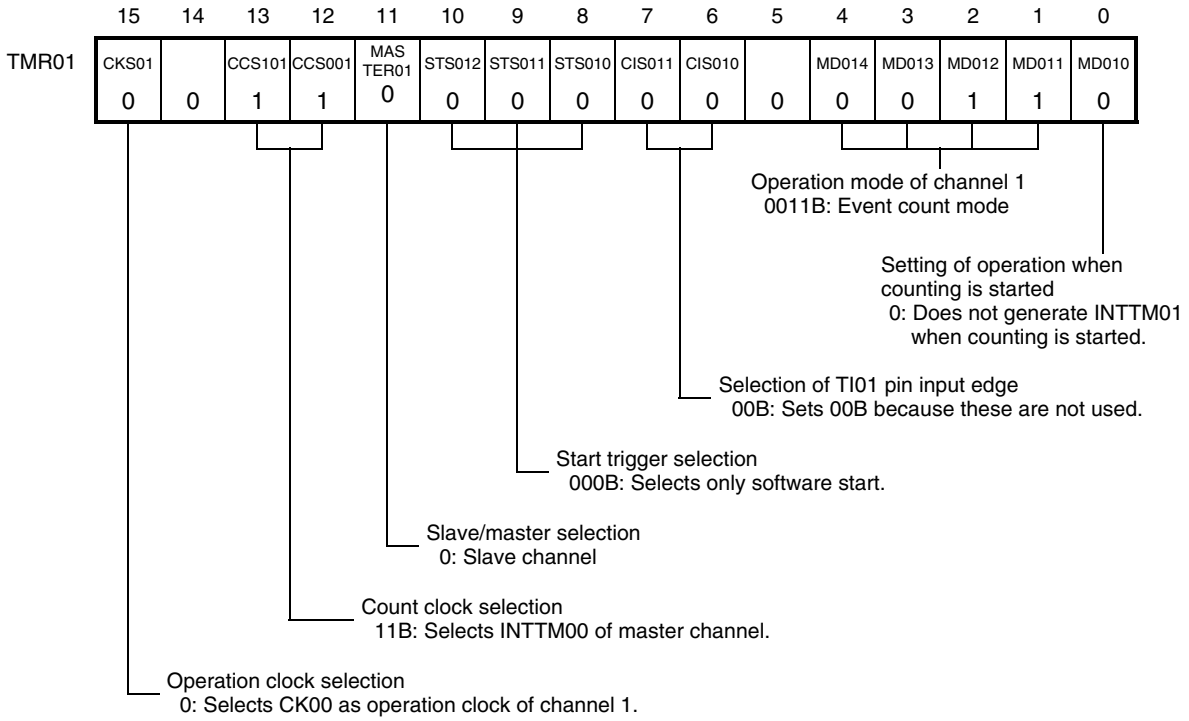

(b) Other registers of slave channel 1 (real-time output trigger generation channel (TRC01 = 1))

TOE0:TOE01	0: Stops the TO01 output operation by counting operation.
TO0:TO01	0: Outputs a low level from TO01.
TOM0:TOM01	0: Sets 0 when TOE01 = 0 (stops the TO01 output operation by counting operation).
TOT0:TOT01	0: Sets 0 when TOM01 = 0 (master channel output mode).
TOL0:TOL01	0: Sets 0 when TOM01 = 0 (master channel output mode).
TDE0:TDE01	0: Stops dead time control.
TRE0:TRE01	0: Stops real-time output.
TRO0:TRO01	0: Sets 0 when TRE01 = 0 (stops real-time output).
TRC0:TRC01	1: Operates as the real-time output trigger generation channel.
TME0:TME01	0: Stops modulated output.

Figure 7-90. Example of Set Contents of Registers
When Non-complementary Modulation Output Function (Type 2) (Slave Channels 2 to 7) Is Used

(a) Timer mode register m (TMRm) of slave channels 2 to 7 (real-time output channel (TRCm = 0))

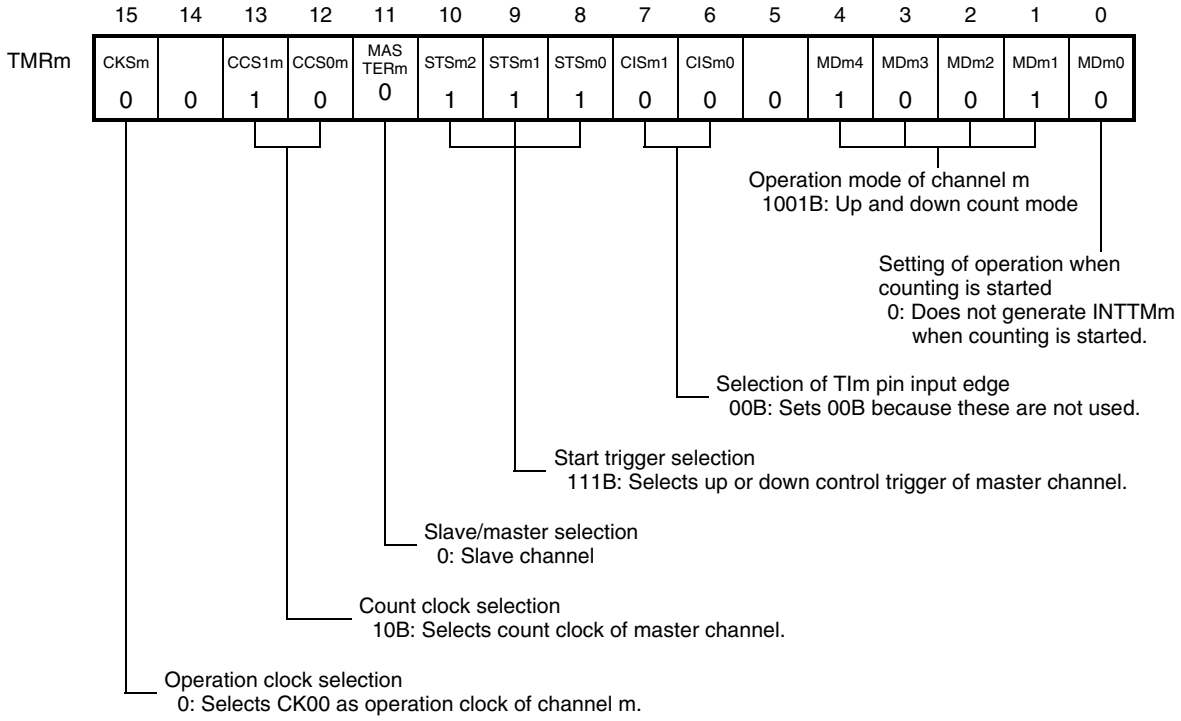

(b) Other registers of slave channels 2 to 7 (real-time output channel (TRCm = 0))

TOE0:TOEm	0: Stops the TOm output operation by counting operation. 1: Enables the TOm output operation by counting operation.
TO0:TOm	0: Outputs a low level from TOm. 1: Outputs a high level from TOm.
TOM0:TOMm	1: Sets slave channel output mode.
TOT0:TOTm	1: Sets triangular wave PWM output.
TOL0:TOLm	0: Positive logic output (active-high) Note
TDE0:TDEm	0: Stops dead time control.
TRE0:TREm	1: Enables real-time output.
TRO0:TROm	0: Outputs a low level as real-time output. 1: Outputs a high level as real-time output.
TRC0:TRCm	0: Does not operate as the real-time output trigger generation channel.
TME0:TMEm	0: Stops modulated output. 1: Enables modulated output.

Note Set the TLS7 to TLS2 bits of the OPMR register to 1 for inverted output.

Remark m = 02 to 07

Figure 7-91. Operation Procedure When Non-complementary Modulation Output Function (Type 2) Is Used (1/2)

	Software Operation	Hardware Status
TAUS default setting		Power-off status (Clock supply is stopped and writing to each register is disabled.)
	Sets the TAU0EN and TAUOPEN bits of the PER2 register to 1. →	Power-on status. Each channel stops operating. (Clock supply is started and writing to each register is enabled.)
	Sets the TPS0 register. Determines clock frequencies of CK00 and CK01.	
Channel default setting	Sets the TMR00, TMR01, and TMRm registers of eight channels to be used (determines operation mode of channels). An interval (period) value is set to the TDR00 register of the master channel, the number of interrupts to be thinned is set to the TDR01 register of slave channel 1, and a duty factor is set to the TDRm register of slave channels 2 to 7.	Channel stops operating. (Clock is supplied and some power is consumed.)
	Sets slave channel 1. Sets the TRC01 bit to 1 (trigger generation channel). Sets slave channels 2 to 7. Sets the TOMm bit to 1 (slave channel output mode). Sets the TOTm bit to 1 (triangular wave PWM output). Sets the TOLm bit to 0 (positive logic output). Sets the TDEm bit to 0 (stops dead time control). Sets the TREm bit to 1 (real-time output enable). Real-time output level is set to the TROm bit. Sets the TRCm bit to 0 (non-trigger generation channel). Sets the TMEm bit and determines the modulated output control.	The TOm pin goes into Hi-Z output state.
	Sets the TOm bit and determines default level of the TOm output. →	The TOm default setting level is output when the port mode register is in output mode and the port register is 0.
	Sets the TOEm bit to 1 and enables operation of TOm. →	TOm does not change because channel has stopped operating.
	Clears the port register and port mode register to 0. →	The TOm pin outputs the TOm set level.

Remark m = 02 to 07

Figure 7-91. Operation Procedure When Non-complementary Modulation Output Function (Type 2) Is Used (2/2)

Operation is resumed.

	Software Operation	Hardware Status
Operation start	Sets TOE0 (master) and TOEm (slaves 2 to 7) to 1 (only when operation is resumed). The TS00 (master), TS01 (slave 1), and TSm (slaves 2 to 7) bits of the TS0 register are set to 1 at the same time. →	TE00 = 1, TE01 = 1, TEm = 1 When the master channel starts counting, INTTM00 is generated. Triggered by this interrupt, the slave channel 1 also start counting.
	The TS00, TS01, and TSm bits automatically return to 0 because they are trigger bits.	
During operation	The set value of the TDR00 (master) register must be changed during an up status period. The set value of the TDRm (slaves 2 to 7) register can be changed. The TCR00, TCR01, and TCRm registers can always be read. The TSRm (slave) register can always be read. Set values of the TROm and TMEm registers can be changed.	Triangular wave PWM output is performed by the master channel and slave channels 2 to 7. At slave channel 1, the values of the TDR01 register are transferred to TCR01, triggered by INTTM00 of the master channel, and the counter starts counting down. Slave channels 2 to 7 perform real-time output by using the INTTM01 signal of slave channel 1. Non-complementary modulation output of the PWM and real-time outputs is performed according to setting of TMEm. After that, the above operation is repeated.
Operation stop	The TT00 (master), TT01 (slave 1), and TTm (slaves 2 to 7) bits are set to 1 at the same time. →	TE00, TE01, TEm = 0, and count operation stops. TCR00, TCR01, and TCRm hold count value and stops. The TOm output is not initialized but holds current status.
	The TT00, TT01, and TTm bits automatically return to 0 because they are trigger bits.	
	The TOEm bits of slave channels 2 to 7 are cleared to 0 and value is set to the TOm bit. →	The TOm pin outputs the TOm set level.
TAUS stop	To hold the TOm pin output level Clears the TOm bit to 0 after the value to be held is set to the port register. →	The TOm pin output level is held by port function.
	When holding the TOm pin output level is not necessary Switches the port mode register to input mode. →	The TOm pin output level goes into Hi-Z output state.
	The TAU0EN and TAUOPEN bits of the PER2 register are cleared to 0. →	Power-off status All circuits are initialized and SFR of each channel is also initialized. (The TOm bit is cleared to 0 and the TOm pin is set to port mode.)

Remark m = 02 to 07

7.5.15 Operation as complementary modulation output function

The 120 degree excitation method is an inverter control method used for 3-phase brushless DC motors. The complementary modulation output function can be used to realize this method. By using a complementary method, braking can also be controlled. The complementary modulation output function sets three duty widths for one period and generates 3-phase triangular wave modulation PWM output with added dead time (TOp and TOq). The complementary modulation output function uses one period generation channel (channel 0), three duty generation channels (channels 2, 4, and 6), and three dead time generation channels (channels 3, 5, and 7) (6-phase triangular wave PWM output function). See **7.5.6 Operation as 6-phase triangular wave PWM output function** for details of the 6-phase triangular wave modulation PWM function.

The output is modulated in accordance with the TROp and TROq values corresponding to the TOp and TOq pins that generates the PWM. Channel 1 should therefore be set as the real-time output trigger generation channel. See **7.5.11 Operation as linked real-time output function (type 2)** for details of real-time output triggers.

Complementary modulation output is generated by using 6-phase triangular wave PWM, the TROp and TROq outputs, which are generated by the linked real-time function (type 2), manipulation of the TMEp and TMEq bits of timer modulation output enable register 0 (TME0) and the TOLp and TOLq bits that are select to specify the addition of dead time.

The master channel operates in the interval timer mode and counts the periods.

TCRn of slave channel 1 operates in event counter mode and generates a real-time output trigger. The number of INTTM00 outputs of the master channel is thinned and a real-time output trigger is generated.

When using this function, set the thinning of INTTM00 to odd numbers (1, 3, 5, …).

Slave channels 2, 4, 6 operate in up and down count mode, count the duty factor.

Slave channels 3, 5, 7 operate in one-count mode, count the dead time factor.

A 6-phase triangular wave PWM waveform with dead time is output by changing TOp and TOq by the count operation (INTTMp, INTTMq) of slave channels 2, 4, 6 (duty) and slave channels 3, 5, 7 (dead time).

Furthermore, modulation output can be controlled by manipulating TMEp and TMEq. The PWM and real-time outputs are modulated and output from the TOp and TOq pins when TMEp and TMEq are “1”. When TMEp and TMEq are “0”, the real-time output setting value (TROp and TROq) will be output from the TOp and TOq pins.

To modulate the PWM and real-time outputs and output them from the TOp and TOq pins, determine the default levels of the TOp and TOq pins according to the settings of TOLp and TOLq of slave channels 2 to 7. (The default levels are at low level when TOLp and TOLq are “0”, and at high level when TOLp and TOLq are “1”.)

With complementary modulation output, a PWM modulation waveform is output by assuming slave channels 2 and 3, 4 and 5, and 6 and 7 operate as pairs. The operation is as follows.

- When TROp = 1, TOLp = 0, TROq = 0 and TOLq = 1, respectively, a positive-phase PWM and a reverse-phase PWM are output from the TOp pin and TOq pin, respectively.
- When TROp = 0, TOLp = 1, TROq = 1, and TOLq = 0, respectively, a reverse-phase PWM and a positive-phase PWM are output from the TOp pin and TOq pin, respectively.

A positive-phase PWM is output from the TOp pin of a channel for which TROp is set to “1”, and a reverse-phase PWM is output from the TOq pin of a channel that is to be paired with the channel for which TROp is set to “1”.

(Caution and **Remark** are listed on the next page.**)**

Cautions **1. TS00, TSp or TSq cannot be set to "1" (forcible restart) while TE00 = 1, TEp = 1, or TEq = 1. If TS00, TSp, or TSq is set to "1" while TE00 = 1, TEp = 1, or TEq = 1, the counter value (TCR00, TCRp, or TCRq) will be illegal and TOp or TOq will not be able to output the expected waveform.**

2. To change TOLp and TOLq, they must be rewritten when both the TOp and TOq pins are low-level (inactive level). Note, however, that after TROp and TROq have been set to 0, the TOp and TOq pins will not go low until the real-time output trigger is output. If TOLp and TOLq are rewritten when the TOp and TOq pins are not low, they may output the same level.
Also, it is recommended to rewrite TROp, TROq, TOLp, TOLq, TMEp, and TMEq in the interrupt processing of INTTM01, which is used as the real-time output trigger.

Remark p = 02, 04, 06
q = 03, 05, 07

Figure 7-92. Block Diagram of Operation as Complementary Modulation Output Function

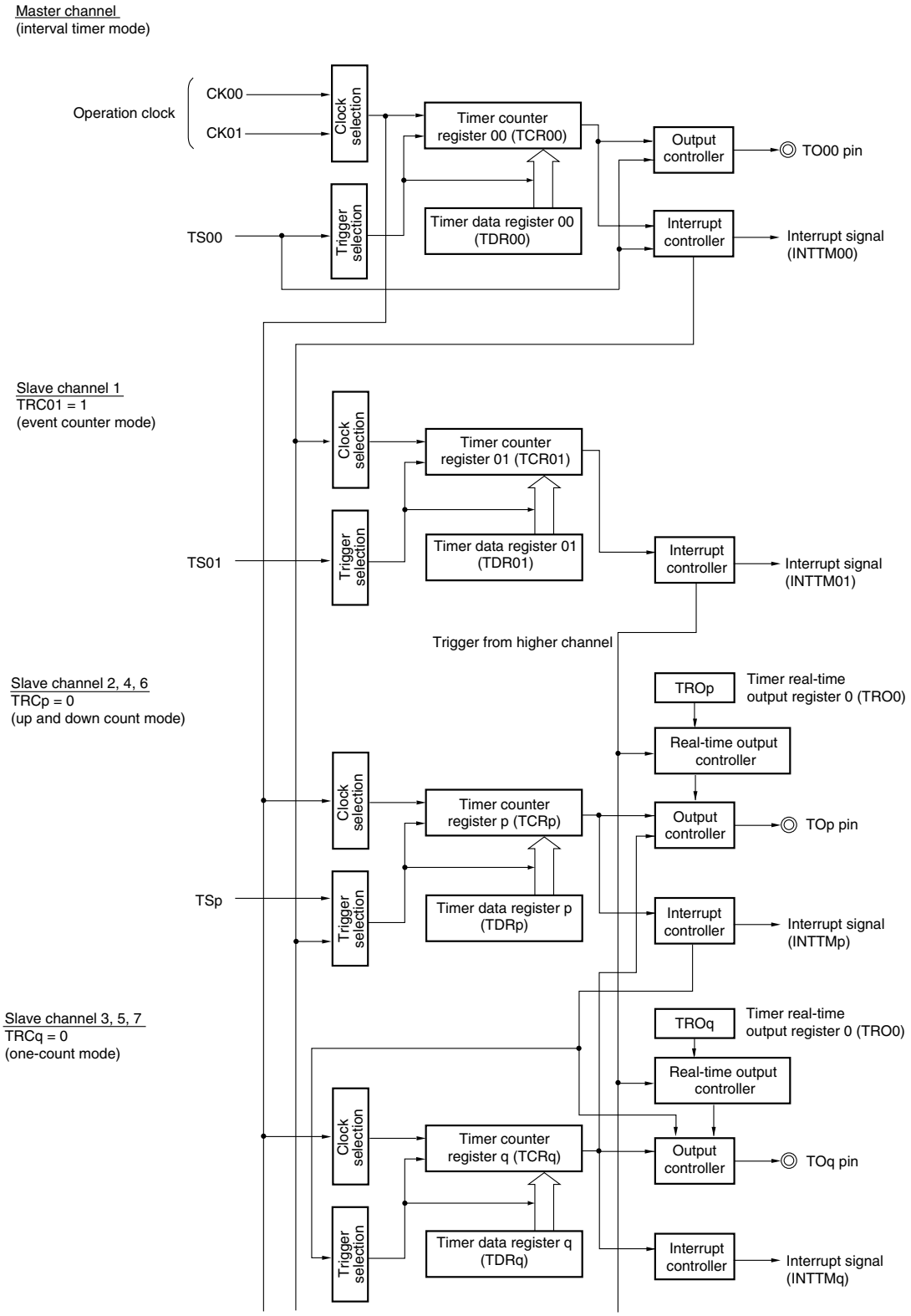

Remark p = 02, 04, 06
q = 03, 05, 07

Figure 7-93. Example of Basic Timing of Operation as Complementary Modulation Output Function (Default setting : TO00 = 1, Top = 0, TOq = 1, MD000 = 0)

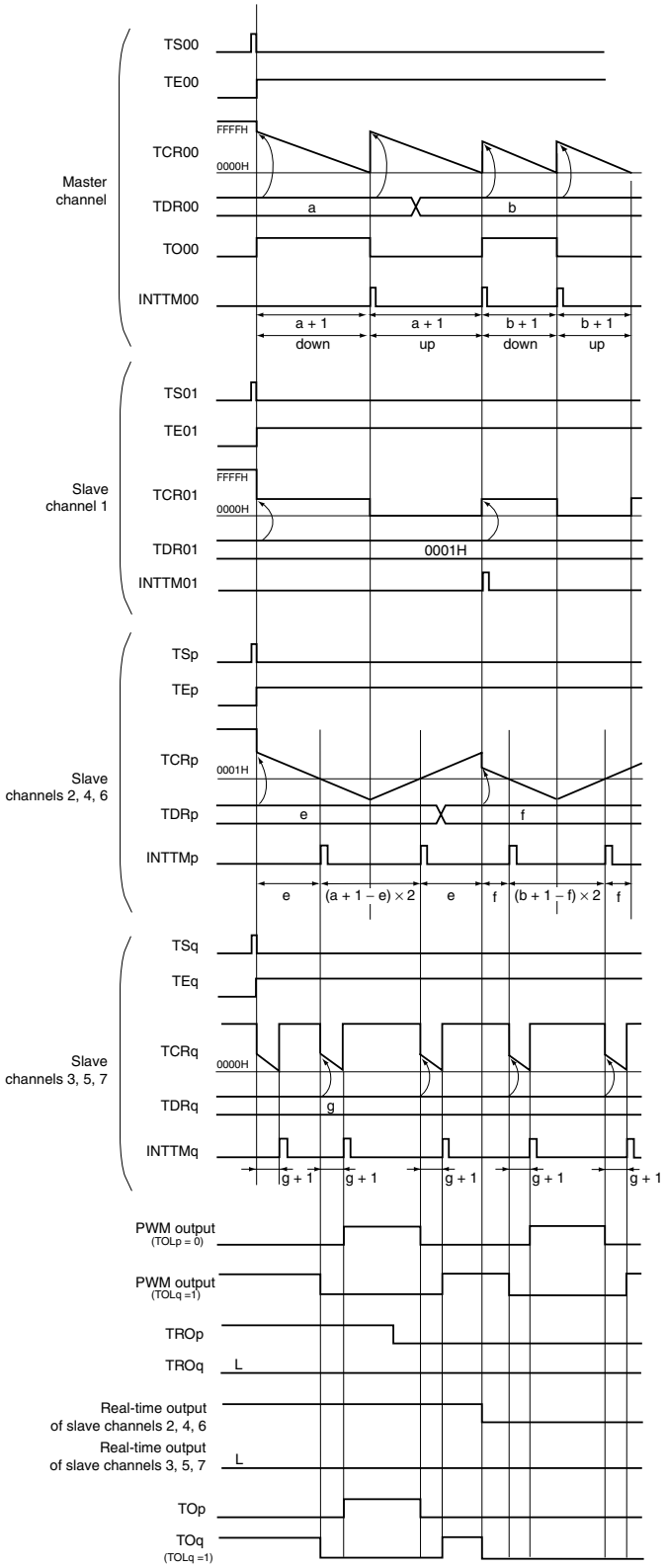

Remark p = 02, 04, 06
q = 03, 05, 07

An example of using complementary excitation to achieve 120 degree excitation control of a 3-phase brushless DC motor is shown in Figure 7-94 below.

Figure 7-94. Example of using complementary excitation to achieve 120 degree excitation control of a 3-phase brushless DC motor (Active High)

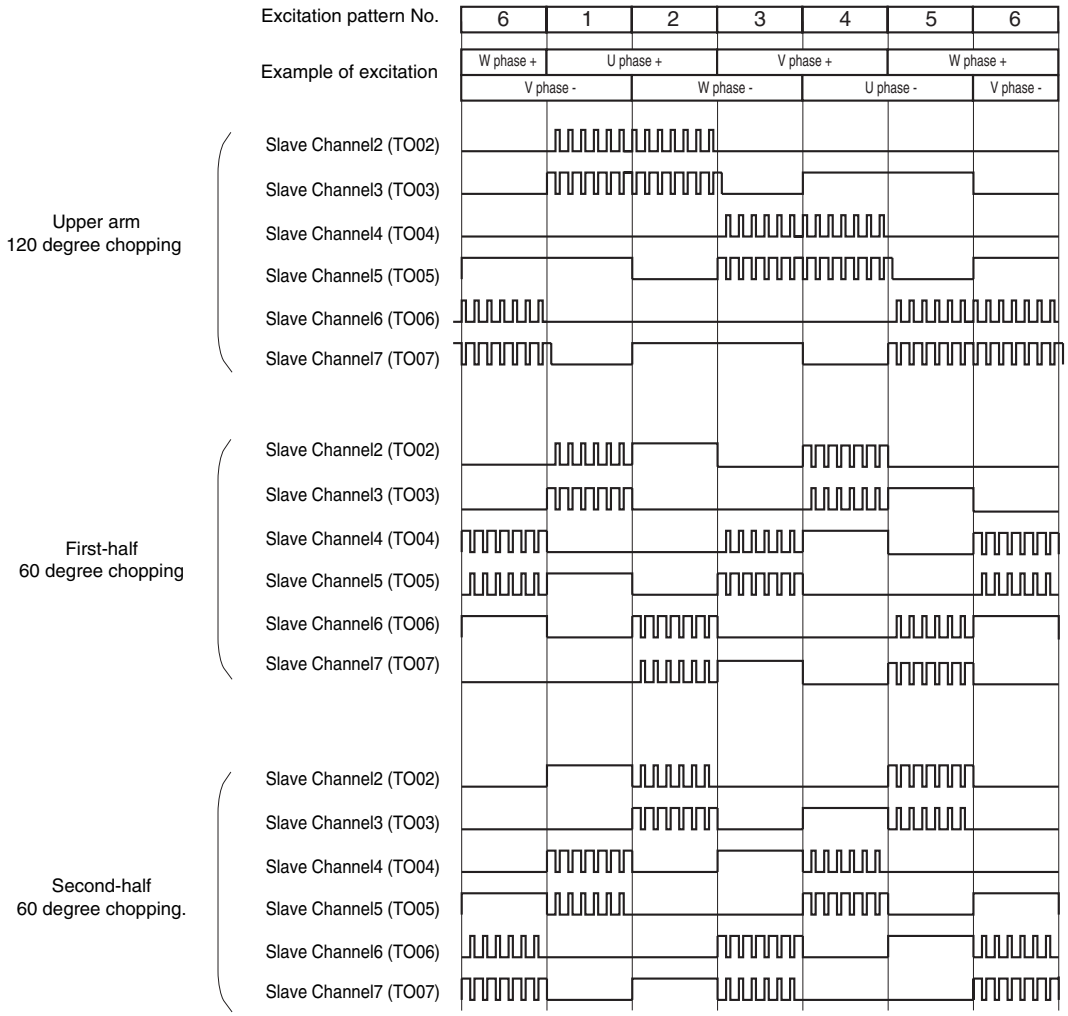

An example of the combinations of TROp, TROq and TMEp, TMEq, TOLp and TOLq when using the complementary modulation output function is shown below.

TOLp and TOLq are rewritten during operation because the patterns switch between positive-phase PWM and reverse-phase PWM. To change TOLp and TOLq, They must be rewritten when both the TOp and TOq pins are low-level (inactive level). Note, however, that after TROp and TROq have been set to 0, the TOp and TOq pins will not go low until the real-time output trigger is output.

Also, TROp, TROq, TMEp, and TMEq change during timer operation because the excitation patterns switch in upper arm 120 degree chopping, first-half 60 degree chopping, and second-half 60° chopping.

Table 7-8. Example of using complementary excitation to achieve 120 degree excitation control

(Upper arm 120 degree chopping)

Excitation No.	Control Register	Set Value of TROp, TROq, TMEp, TMEq, TOLp, TOLq						TOp, TOq Output					
		Slave 2	Slave 3	Slave 4	Slave 5	Slave 6	Slave 7	Slave 2	Slave 3	Slave 4	Slave 5	Slave 6	Slave 7
1	TROp, q	1	0	0	1	0	0	Positive -phase PWM	Reverse -phase PWM	Low	High	Low	Low
	TMEp, q	1	1	0	0	1	1						
	TOLp, q	0	1	1	0	1	0						
2	TROp, q	1	0	0	0	0	1	Positive -phase PWM	Reverse -phase PWM	Low	Low	Low	High
	TMEp, q	1	1	1	1	0	0						
	TOLp, q	0	1	0	1	1	0						
3	TROp, q	0	0	1	0	0	1	Low	Low	Positive -phase PWM	Reverse -phase PWM	Low	High
	TMEp, q	1	1	1	1	0	0						
	TOLp, q	1	0	0	1	1	0						
4	TROp, q	0	1	1	0	0	0	Low	High	Positive- phase PWM	Reverse -phase PWM	Low	Low
	TMEp, q	0	0	1	1	1	1						
	TOLp, q	1	0	0	1	0	1						
5	TROp, q	0	1	0	0	1	0	Low	High	Low	Low	Positive -phase PWM	Reverse -phase PWM
	TMEp, q	0	0	1	1	1	1						
	TOLp, q	1	0	1	0	0	1						
6	TROp, q	0	0	0	1	1	0	Low	Low	Low	High	Positive- phase PWM	Reverse -phase PWM
	TMEp, q	1	1	0	0	1	1						
	TOLp, q	0	1	1	0	0	1						

Remark Positive-phase PWM when TROp = 1 and TOLp = 0, or when TROq = 1 and TOLq = 0
Reverse-phase PWM when TROp = 0 and TOLp = 1, or when TROq = 0 and TOLq = 1

Table 7-9. Example of using complementary excitation to achieve 120 degree excitation control

(First-half 60 degree chopping)

Excitation No.	Control Register	Set Value of TROp, TROq, TMEp, TMEq, TOLp, TOLq						TOp, TOq Output					
		Slave 2	Slave 3	Slave 4	Slave 5	Slave 6	Slave 7	Slave 2	Slave 3	Slave 4	Slave 5	Slave 6	Slave 7
1	TROp, q	1	0	0	1	0	0	Positive -phase PWM	Reverse -phase PWM	Low	High	Low	Low
	TMEp, q	1	1	0	0	1	1						
	TOLp, q	0	1	1	0	1	0						
2	TROp, q	1	0	0	0	0	1	High	Low	Low	Low	Reverse -phase PWM	Positive -phase PWM
	TMEp, q	0	0	1	1	1	1						
	TOLp, q	0	1	0	1	1	0						
3	TROp, q	0	0	1	0	0	1	Low	Low	Positive -phase PWM	Reverse -phase PWM	Low	High
	TMEp, q	1	1	1	1	0	0						
	TOLp, q	1	0	0	1	1	0						
4	TROp, q	0	1	1	0	0	0	Reverse -phase PWM	Positive -phase PWM	High	Low	Low	Low
	TMEp, q	1	1	0	0	1	1						
	TOLp, q	1	0	0	1	0	1						
5	TROp, q	0	1	0	0	1	0	Low	High	Low	Low	Positive -phase PWM	Reverse -phase PWM
	TMEp, q	0	0	1	1	1	1						
	TOLp, q	1	0	1	0	0	1						
6	TROp, q	0	0	0	1	1	0	Low	Low	Reverse -phase PWM	Positive -phase PWM	High	Low
	TMEp, q	1	1	1	1	0	0						
	TOLp, q	0	1	1	0	0	1						

Remark Positive-phase PWM when TROp = 1 and TOLp = 0, or when TROq = 1 and TOLq = 0
Reverse-phase PWM when TROp = 0 and TOLp = 1, or when TROq = 0 and TOLq = 1

Table 7-10. Example of using complementary excitation to achieve 120 degree excitation control

(Second-half 60 degree chopping)

Excitation No.	Control Register	Set Value of TROp, TROq, TMEp, TMEq, TOLp, TOLq						TOp, TOq Output					
		Slave 2	Slave 3	Slave 4	Slave 5	Slave 6	Slave 7	Slave 2	Slave 3	Slave 4	Slave 5	Slave 6	Slave 7
1	TROp, q	1	0	0	1	0	0	High	Low	Reverse -phase PWM	Positive -phase PWM	Low	Low
	TMEp, q	0	0	1	1	1	1						
	TOLp, q	0	1	1	0	1	0						
2	TROp, q	1	0	0	0	0	1	Positive -phase PWM	Reverse -phase PWM	Low	Low	Low	High
	TMEp, q	1	1	1	1	0	0						
	TOLp, q	0	1	0	1	1	0						
3	TROp, q	0	0	1	0	0	1	Low	Low	High	Low	Reverse -phase PWM	Positive -phase PWM
	TMEp, q	1	1	0	0	1	1						
	TOLp, q	1	0	0	1	1	0						
4	TROp, q	0	1	1	0	0	0	Low	High	Positive -phase PWM	Reverse -phase PWM	Low	Low
	TMEp, q	0	0	1	1	1	1						
	TOLp, q	1	0	0	1	0	1						
5	TROp, q	0	1	0	0	1	0	Reverse -phase PWM	Positive -phase PWM	Low	Low	High	Low
	TMEp, q	1	1	1	1	0	0						
	TOLp, q	1	0	1	0	0	1						
6	TROp, q	0	0	0	1	1	0	Low	Low	Low	High	Positive -phase PWM	Reverse -phase PWM
	TMEp, q	1	1	0	0	1	1						
	TOLp, q	0	1	1	0	0	1						

Remark Positive-phase PWM when TROp = 1 and TOLp = 0, or when TROq = 1 and TOLq = 0
Reverse-phase PWM when TROp = 0 and TOLp = 1, or when TROq = 0 and TOLq = 1

Figure 7-95. Example of Set Contents of Registers When Complementary Modulation Output Function (Master Channel) Is Used

(a) Timer mode register 00 (TMR00)

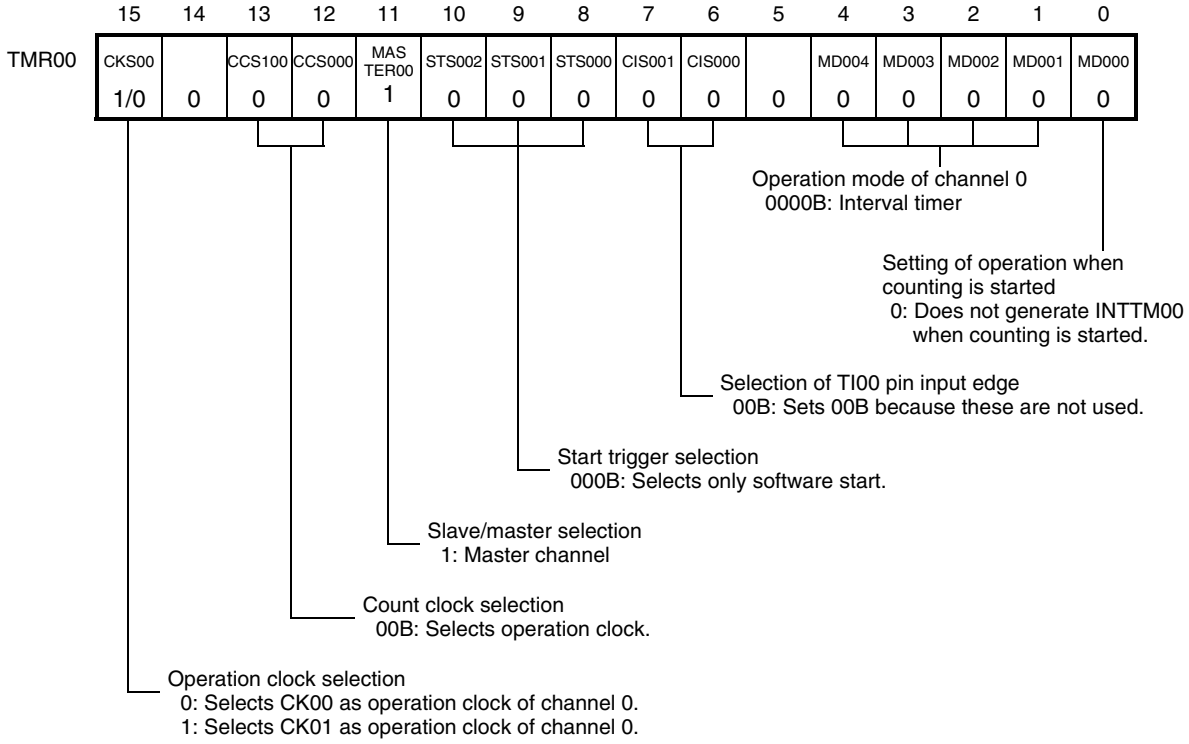

(b) Other registers

TOE0:TOE00	0: Stops the TO00 output operation by counting operation. 1: Enables the TO00 output operation by counting operation.
TO0:TO00	1: Outputs a high level from TO00.
TOM0:TOM00	0: Sets 0 when TOE00 = 0 (stops the TO00 output operation by counting operation).
TOT0:TOT00	0: Sets 0 when TOM00 = 0 (master channel output mode).
TOL0:TOL00	0: Sets 0 when TOM00 = 0 (master channel output mode).
TDE0:TDE00	0: Stops dead time control.
TRE0:TRE00	0: Stops real-time output.
TRO0:TRO00	0: Sets 0 when TRE00 = 0 (stops real-time output).
TRC0:TRC00	0: Does not operate as the real-time output trigger generation channel.
TME0:TME00	0: Stops modulated output.

Figure 7-96. Example of Set Contents of Registers When Complementary Modulation Output Function (Slave Channel 1) Is Used

(a) Timer mode register 01 (TMR01) of slave channel 1 (real-time output trigger generation channel (TRC01 = 1))

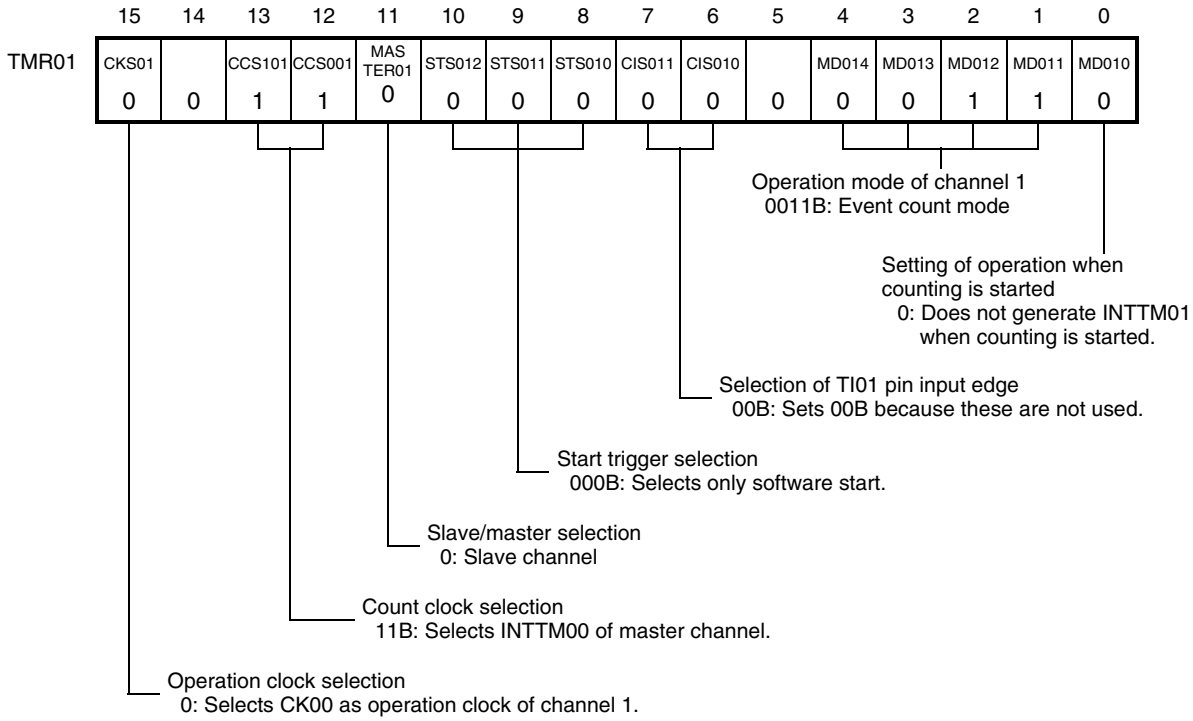

(b) Other registers of slave channel 1 (real-time output trigger generation channel (TRC01 = 1))

TOE0:TOE01	0: Stops the TO01 output operation by counting operation.
TO0:TO01	0: Outputs a low level from TO01.
TOM0:TOM01	0: Sets 0 when TOE01 = 0 (stops the TO01 output operation by counting operation).
TOT0:TOT01	0: Sets 0 when TOM01 = 0 (master channel output mode).
TOL0:TOL01	0: Sets 0 when TOM01 = 0 (master channel output mode).
TDE0:TDE01	0: Stops dead time control.
TRE0:TRE01	0: Stops real-time output.
TRO0:TRO01	0: Sets 0 when TRE01 = 0 (stops real-time output).
TRC0:TRC01	1: Operates as the real-time output trigger generation channel.
TME0:TME01	0: Stops modulated output.

Figure 7-97. Example of Set Contents of Registers When Complementary Modulation Output Function (Slave Channels 2, 4, 6) Is Used

(a) Timer mode register p (TMRp) of slave channels 2, 4, 6 (real-time output channel (TRCp = 0))

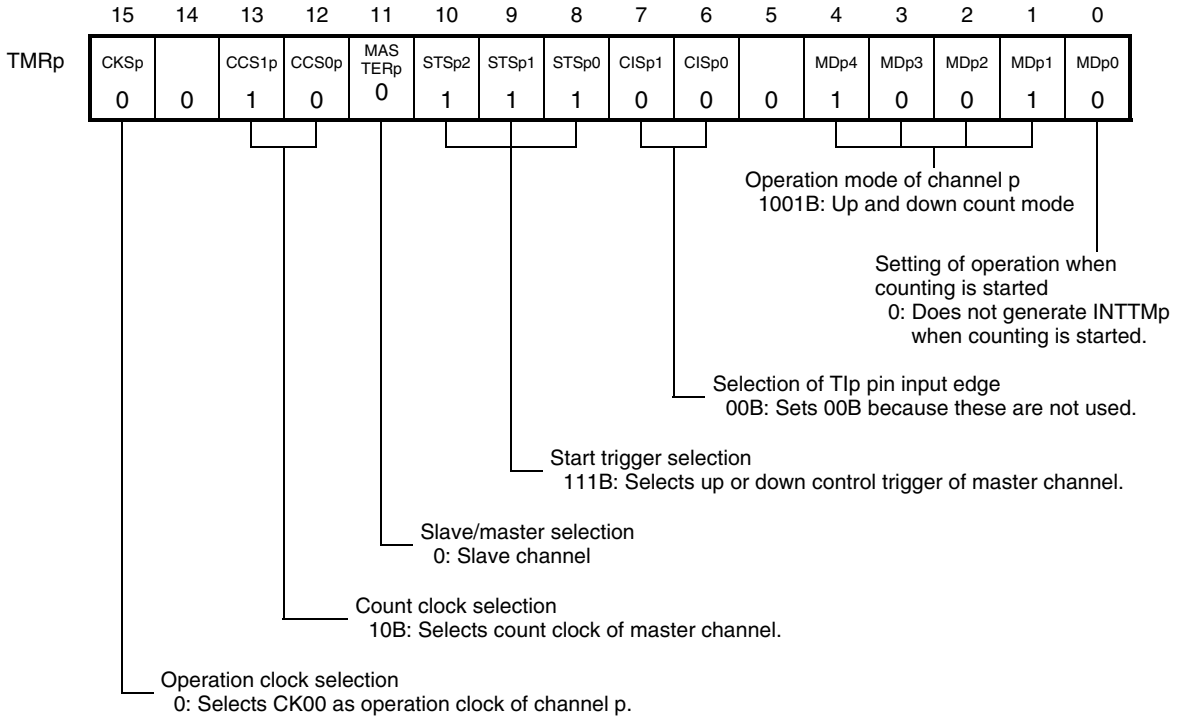

(b) Other registers of slave channels 2, 4, 6 (real-time output channel (TRCp = 0))

TOE0:TOEp	0: Stops the TOp output operation by counting operation. 1: Enables the TOp output operation by counting operation.
TO0:TOp	0: Outputs a low level from TOp. 1: Outputs a high level from TOp.
TOM0:TOMp	1: Sets slave channel output mode.
TOT0:TOTp	1: Sets triangular wave PWM output.
TOL0:TOLp	0: Positive logic output (active-high) 1: Inverted output (active-low)
TDE0:TDEp	1: Enables dead time control.
TRE0:TREp	1: Enables real-time output.
TRO0:TROp	0: Outputs a low level as real-time output. 1: Outputs a high level as real-time output.
TRC0:TRCp	0: Does not operate as the real-time output trigger generation channel.
TME0:TMEp	0: Stops modulated output. 1: Enables modulated output.

Remark p = 02, 04, 06

Figure 7-98. Example of Set Contents of Registers When Complementary Modulation Output Function (Slave Channels 3, 5, 7) Is Used

(a) Timer mode register q (TMRq) of slave channels 3, 5, 7 (real-time output channel (TRCq = 0))

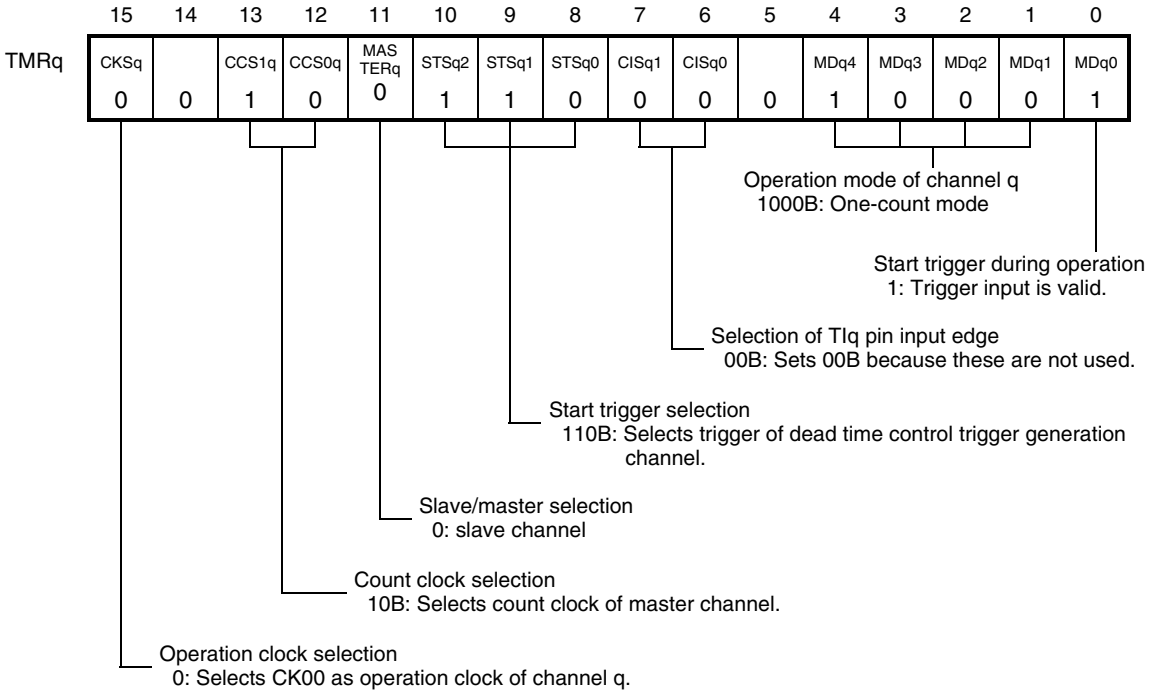

(b) Other registers of slave channels 3, 5, 7 (real-time output channel (TRCq = 0))

TOE0:TOEq	0: Stops the TOq output operation by counting operation. 1: Enables the TOq output operation by counting operation.
TO0:TOq	0: Outputs a low level from TOq. 1: Outputs a high level from TOq.
TOM0:TOMq	1: Sets slave channel output mode.
TOT0:TOTq	1: Sets triangular wave PWM output.
TOL0:TOLq	0: Positive logic output (active-high) 1: Inverted output (active-low)
TDE0:TDEq	1: Enables dead time control.
TRE0:TREq	1: Enables real-time output.
TRO0:TROq	0: Outputs a low level as real-time output. 1: Outputs a high level as real-time output.
TRC0:TRCq	0: Does not operate as the real-time output trigger generation channel.
TME0:TMEq	0: Stops modulated output. 1: Enables modulated output.

Remark q = 03, 05, 07

Figure 7-99. Operation Procedure When Complementary Modulation Output Function Is Used (1/2)

	Software Operation	Hardware Status
TAUS default setting		Power-off status (Clock supply is stopped and writing to each register is disabled.)
	Sets the TAU0EN and TAUOPEN bits of the PER2 register to 1. ▶	Power-on status. Each channel stops operating. (Clock supply is started and writing to each register is enabled.)
	Sets the TPS0 register. Determines clock frequencies of CK00 and CK01.	
Channel default setting	Sets the TMR00, TMR01, TMRp, and TMRq registers of eight channels to be used (determines operation mode of channels). An interval (period) value is set to the TDR00 register of the master channel, the number of interrupts to be thinned is set to the TDR01 register of slave channel 1, a duty factor is set to the TDRp register of slave channels 2, 4, 6, and a dead time width is set to the TDRq register of slave channels 3, 5, 7.	Channel stops operating. (Clock is supplied and some power is consumed.)
	Sets slave channel 1. Sets the TRC01 bit to 1 (trigger generation channel). Sets slave channels 2 to 7. Sets the TOMp and TOMq bits to 1 (slave channel output mode). Sets the TOTp and TOTq bits to 1 (triangular wave PWM output). Sets the TOLp and TOLq bits to 0 (positive logic output). Sets the TDEp and TDEq bits to 0 (stops dead time control). Sets the TREp and TREq bits to 1 (real-time output enable). Real-time output level is set to the TROp and TROq bits. Sets the TRCp and TRCq bits to 0 (non-trigger generation channel). Sets the TMEp and TMEq bits and determines the modulated output control.	The TO00, TOp, and TOq pins go into Hi-Z output state.
	Sets the TO00, TOp, and TOq bits and determines default level of the TOm output. ▶	The TO00, TOp, and TOq default setting levels are output when the port mode register is in output mode and the port register is 0.
	Sets the TOE00, TOEp, TOEq bits to 1 and enables operation of TOm. ▶	TOp and TOq do not change because channel has stopped operating.
	Clears the port register and port mode register to 0. ▶	The TO00, TOp, and TOq pins output the TOm set level.

Remark p = 02, 04, 06
q = 03, 05, 07

Figure 7-99. Operation Procedure When Complementary Modulation Output Function Is Used (2/2)

Operation is resumed.

	Software Operation	Hardware Status
Operation start	Sets TOE00 (master), TOEp and TOEq (slaves 2 to 7) to 1 (only when operation is resumed). The TS00 (master), TS01 (slave 1), TSp and TSq (slaves 2 to 7) bits of the TS0 register are set to 1 at the same time. →	TE00 = 1, TE01 = 1, TEp = 1, TEq = 1 When the master channel starts counting, INTTM00 is generated. Triggered by this interrupt, the slave channels 1 also start counting.
	The TS00, TS01, TSp and TSq bits automatically return to 0 because they are trigger bits.	
During operation	The set value of the TDR00 (master) register must be changed during an up status period. The set value of the TDRp and TDRq (slaves 2 to 7) register can be changed. The TCR00, TCR01, TCRp, and TCRq registers can always be read. Set values of the TOLp, TOLq, TROp, TROq, TMEp, and TMEq registers can be changed.	6-Phase triangular wave PWM output is performed by the master channel and slave channels 2 to 7. At slave channel 1, the values of the TDR01 register are transferred to TCR01, triggered by INTTM00 of the master channel, and the counter starts counting down. Slave channels 2 to 7 perform real-time output by using the INTTM01 signal of slave channel 1. Complementary modulation output of the PWM and real-time outputs is performed according to setting of TMEp and TMEq. After that, the above operation is repeated.
Operation stop	The TT00 (master), TT01 (slave 1), TTp, and TTq (slaves 2 to 7) bits are set to 1 at the same time. →	TE00, TE01, TEp, TEq = 0, and count operation stops.
	The TT00, TT01, TTp, and TTq bits automatically return to 0 because they are trigger bits.	TCR00 TCR01, TCRp, and TCRq hold count value and stops. The TO00, TOp, and TOq output is not initialized but holds current status.
	Sets the TOE00 (master), TOEp and TOEq (slaves 2 to 7) bits to 0, TO00, TOp, and TOq bits to value. →	The TO00, TOp, and TOq pins output the TO00, TOp, and TOq set level.
TAUS stop	To hold the TO00, TOp, and TOq pins output level Clears the TO00, TOp, and TOq bits to 0 after the value to be held is set to the port register. →	The TO00, TOp, and TOq pins output level is held by port function.
	When holding the TO00, TOp, and TOq pins output level is not necessary Switches the port mode register to input mode. →	The TO00, TOp, and TOq pins output level goes into Hi-Z output state.
	The TAU0EN and TAUOPEN bits of the PER2 register are cleared to 0. →	Power-off status All circuits are initialized and SFR of each channel is also initialized. (The TO00, TOp, and TOq bits are cleared to 0 and the TO00, TOp, and TOq pins are set to port mode.)

Remark p = 02, 04, 06
q = 03, 05, 07

7.6 Overcurrent Detection Function

The timer output pin (TOn) can be set to a Hi-Z state when an overcurrent occurs by controlling the Hi-Z state by using the TMOFF0 and TMOFF1 pin inputs or by detecting the Hi-Z state by using a programmable gain amplifier and a comparator.

The following two types of overcurrent detection function are used.

- 2-stage overcurrent detection function
- Overcurrent/electromotive force side detection function

Caution There is no TMOFF1 pin in the 78K0R/IB3. Consequently, high impedance can only be controlled by using the TMOFF0 pin.

(1) 2-stage overcurrent detection function

<1> Reference voltage of comparator 0 < input signal voltage < reference voltage of comparator 1

→ Set the TOn pin to a Hi-Z state.

Timer output is automatically restarted in synchronization with the timer cycle when the input signal voltage is lower than the reference voltage of comparator 0.

<2> Reference voltage of comparator 1 < input signal voltage

→ Set the TOn pin to a Hi-Z state.

Timer output is restarted in synchronization with the next timer cycle by setting a register, when the input signal voltage is lower than the reference voltage of comparator 0.

(2) Overcurrent/ electromotive force side detection function

<1> Input signal voltage (electromotive force) < comparator 0, or comparator 1 < input signal voltage (overcurrent)

→ Set the TOn pin to a Hi-Z state.

Timer output is automatically restarted in synchronization with the timer cycle when the input signal voltage is higher than the reference voltage of comparator 0 or when it is lower than the reference voltage of comparator 1.

Caution There is no positive-side input pin for comparator 1 in the 78K0R/IB3. When using the overcurrent detection function, input the signal that is output by the programmable gain amplifier to the positive-side input of both comparator 0 and comparator 1.

Remark n: Timer channel number (n = 02 to 07)

Overcurrent detection is specified by using the OPMR and OPCR registers. The relationship between the settings of each register and overcurrent detection is shown below.

Table 7-11. Relationship Between the Settings of Each Register and Overcurrent Detection

OPMR register				Input	Software start trigger	Software stop trigger	Hi-Z input pin	Operation example
OPM bit	HPS bit	HSM bit	HDM bit					
0	0	–	0	TMOFF0, TMOFF1	OPHS0	OPHT0	TO02 to TO07	Figure 7-100
			1			–		Figure 7-101
	1	–	0	Comparator 0 output signal, Comparator 1 output signal		OPHT0		Figure 7-102
			1			–		Figure 7-103
1	0	0	–	TMOFF0	OPHS0	–	TO02, TO03	Figure 7-104
				TMOFF1	OPHS1	–	TO06, TO07	
		1		TMOFF0	OPHS0	OPHT0	TO02, TO03	Figure 7-105
				TMOFF1	OPHS1	OPHT1	TO06, TO07	
	1	0	–	Comparator 0 output signal	OPHS0	–	TO02, TO03	Figure 7-106
				Comparator 1 output signal	OPHS1	–	TO06, TO07	
		1		Comparator 0 output signal	OPHS0	OPHT0	TO02, TO03	Figure 7-107
				Comparator 1 output signal	OPHS1	OPHT1	TO06, TO07	

Cautions 1. There is no TMOFF1 pin in the 78K0R/IB3. Consequently, high impedance can only be controlled by using the TMOFF0 pin.

2. There is no positive-side input pin for comparator 1 in the 78K0R/IB3. When executing Hi-Z control using comparator 1 (Figures 7-106 and 7-107), the signal output from the programmable gain amplifier can be used for the positive-side input of comparator 1. When using both comparator 0 and comparator 1 to detect an overcurrent (Figures 7-102 and 7-103), input the signal that is output by the programmable gain amplifier to the positive-side input of both comparator 0 and comparator 1.

Figure 7-100. Overcurrent Detection Example 1
(Example of the output of the TMOFF0 (falling edge detection), TMOFF1 (rising edge detection), TO02, and TO03 pins)

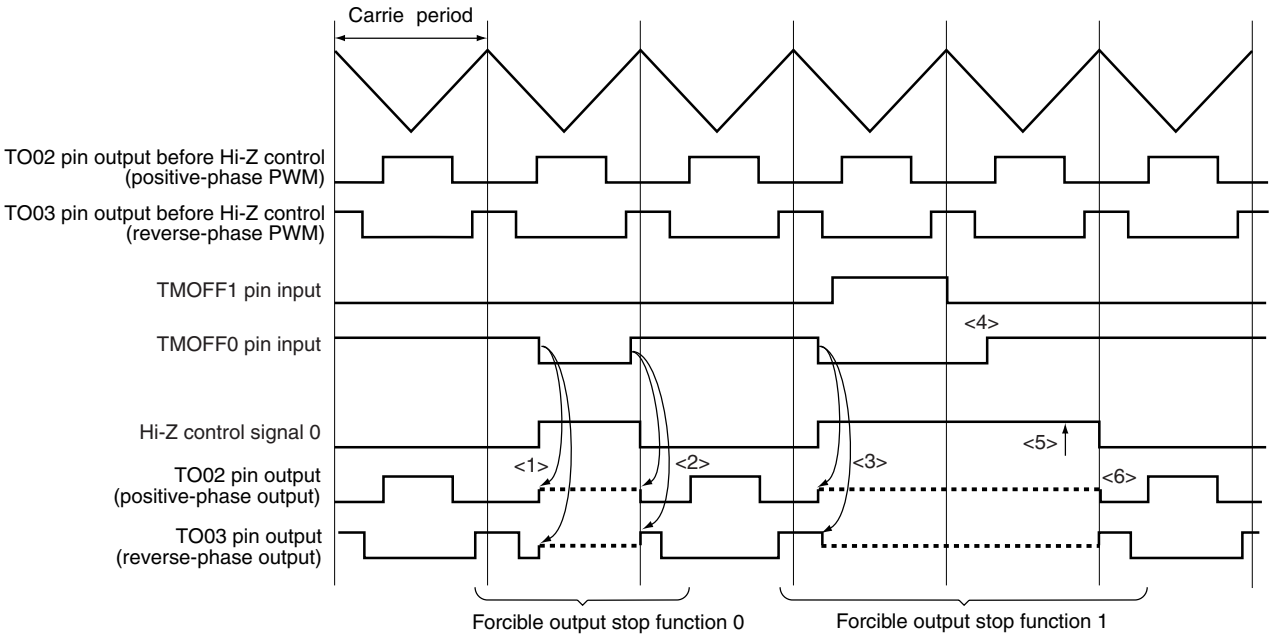

<1> The TO02 and TO03 pin outputs become a Hi-Z state when the falling edge of the TMOFF0 pin input is detected.

<2> The Hi-Z state of the TO02 and TO03 pin outputs is canceled in synchronization with the carrier cycle of the timer after the rising edge of the TMOFF0 pin input is detected.

<3> The TO02 and TO03 pin outputs become a Hi-Z state when the rising edge of the TMOFF1 pin input or the falling edge of the TMOFF0 pin input is detected.

<4> The Hi-Z state of the TO02 and TO03 pin outputs is not canceled even if the falling edge of the TMOFF1 pin input or the rising edge of the TMOFF0 pin input is detected.

<5> 1 is written to the OPHT0 bit after the TMOFF0 and TMOFF1 pin inputs become an inactive level.

<6> The Hi-Z state of the TO02 and TO03 pin outputs is canceled in synchronization with the carrier cycle.

Figure 7-101. Overcurrent Detection Example 2
(Example of the output of the TMOFF0 (rising edge detection), TMOFF1 (falling edge detection), TO02, and TO03 pins)

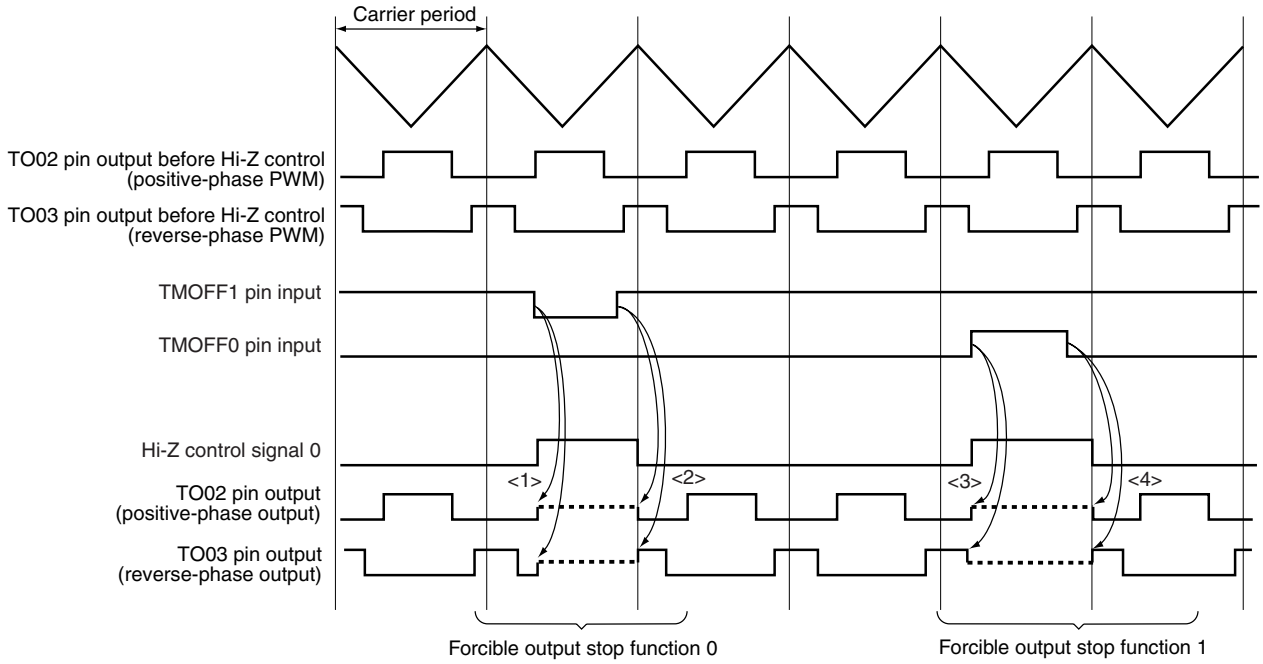

<1> The TO02 and TO03 pin outputs become a Hi-Z state when the falling edge of the TMOFF1 pin input is detected.

<2> The Hi-Z state of the TO02 and TO03 pin outputs is canceled in synchronization with the carrier cycle of the timer after the rising edge of the TMOFF1 pin input is detected.

<3> The TO02 and TO03 pin outputs become a Hi-Z state when the rising edge of the TMOFF0 pin input is detected.

<4> The Hi-Z state of the TO02 and TO03 pin outputs is canceled in synchronization with the carrier cycle of the timer after the falling edge of the TMOFF0 pin input is detected.

Figure 7-102. Overcurrent Detection Example 3
(Example of the output of TO02 and TO03 pins)

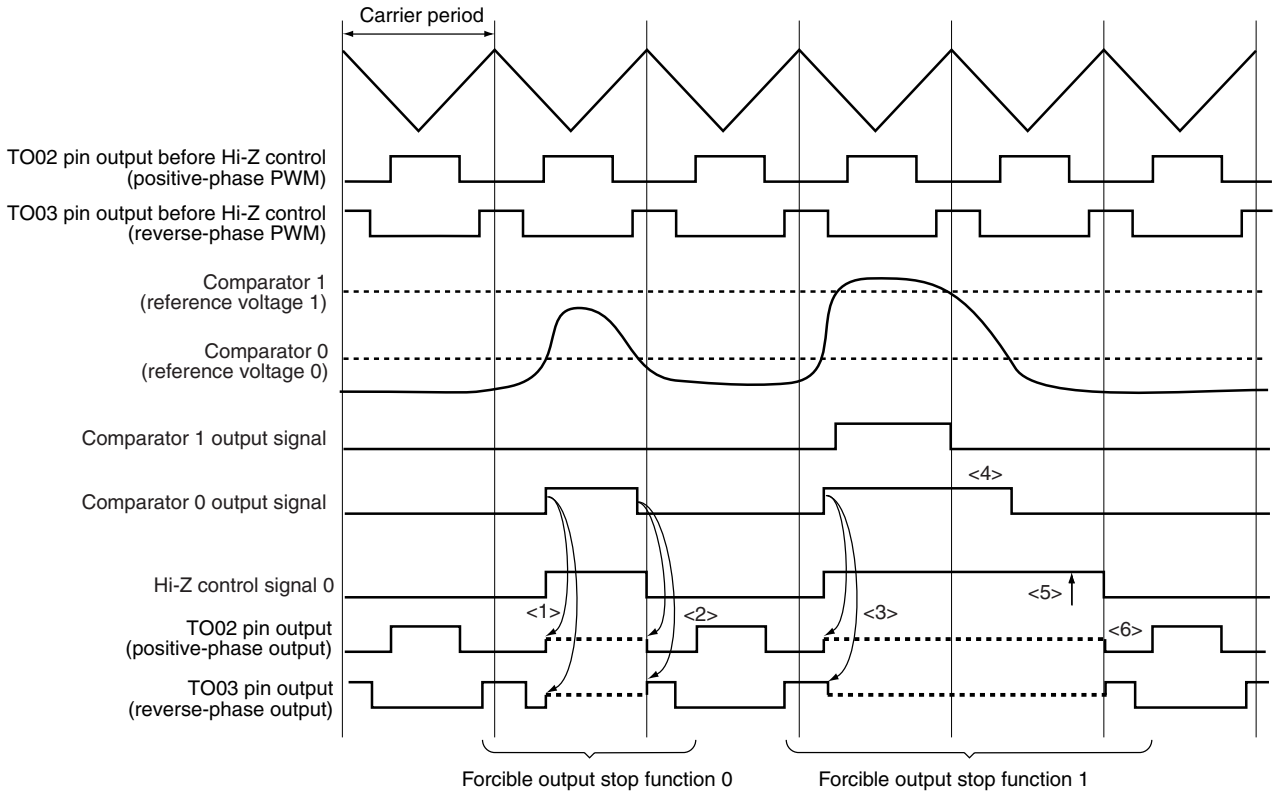

<1> The TO02 and TO03 pin outputs become a Hi-Z state when the rising edge of the comparator 0 output signal is detected.

<2> The Hi-Z state of the TO02 and TO03 pin outputs is canceled in synchronization with the carrier cycle of the timer after the falling edge of the comparator 0 output signal is detected.

<3> The TO02 and TO03 pin outputs become a Hi-Z state when the rising edge of the comparator 1 output signal or the rising edge of the comparator 0 output signal is detected.

<4> The Hi-Z state of the TO02 and TO03 pin outputs is not canceled even if the falling edge of the comparator 1 output signal or the falling edge of the comparator 0 output signal is detected.

<5> 1 is written to the OPHT0 bit after the comparator 0 output signal and comparator 1 output signal become an inactive level.

<6> The Hi-Z state of the TO02 and TO03 pin outputs is canceled in synchronization with the carrier cycle.

Figure 7-103. Overcurrent Detection Example 4
(Example of the output of TO02 and TO03 pins)

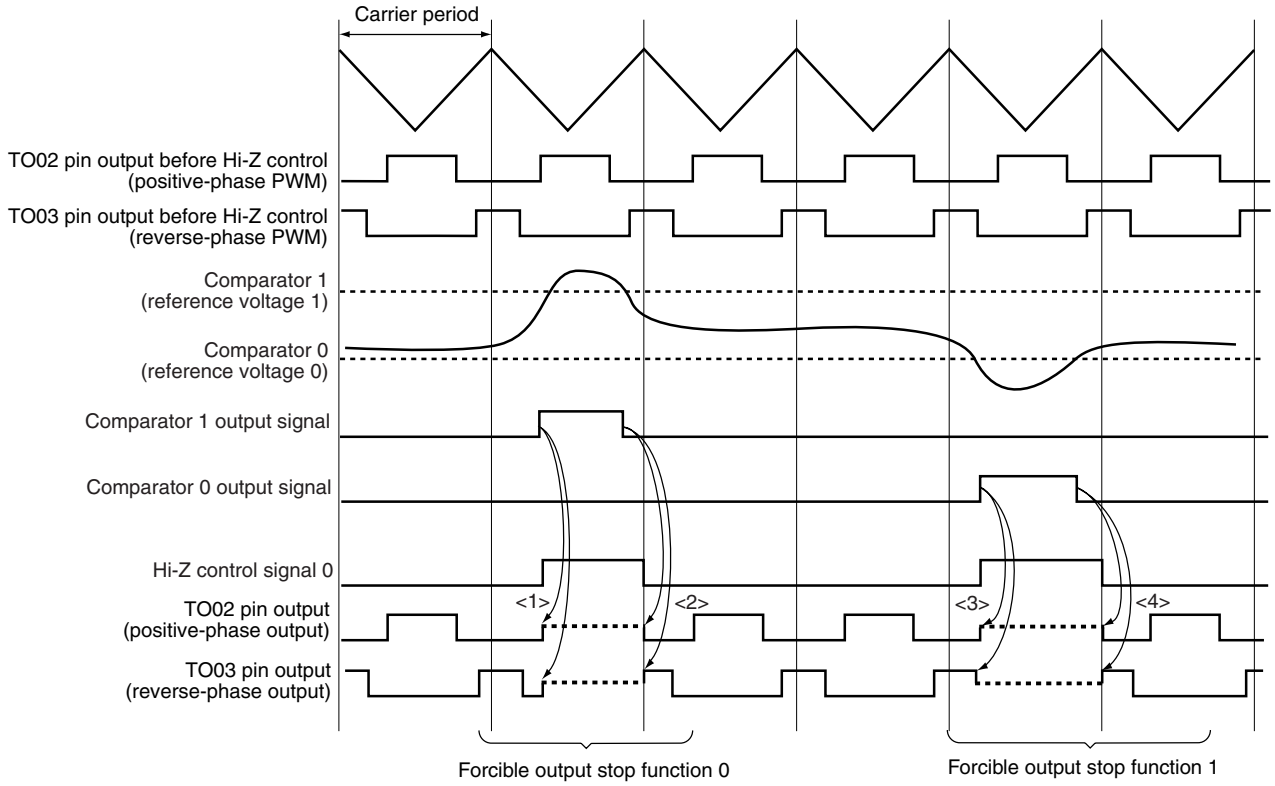

<1> The TO02 and TO03 pin outputs become a Hi-Z state when the rising edge of the comparator 1 output signal is detected.

<2> The Hi-Z state of the TO02 and TO03 pin outputs is canceled in synchronization with the carrier cycle of the timer after the falling edge of the comparator 1 output signal is detected.

<3> The TO02 and TO03 pin outputs become a Hi-Z state when the rising edge of the comparator 0 output signal is detected.

<4> The Hi-Z state of the TO02 and TO03 pin outputs is canceled in synchronization with the carrier cycle of the timer after the falling edge of the comparator 0 output signal is detected.

Caution **Comparator 0 output signal goes high when the input signal falls below reference voltage 0 and goes low when the input signal rises above reference voltage 0 (which is the opposite of the usual pattern). The C0INV bit of the comparator 0 control register (C0CTL) must therefore be set to 1 (to specify inverted output).**

Figure 7-104. Overcurrent Detection Example 5
(Example of the output of the TMOFFn (falling edge detection))

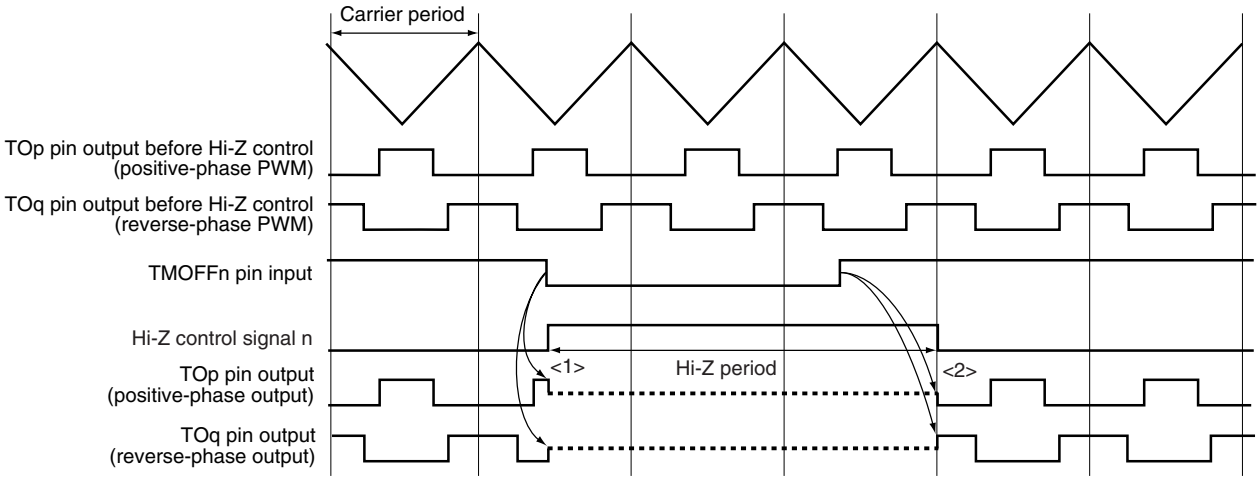

<1> The TOp and TOq pin outputs become a Hi-Z state when the falling edge of the TMOFFn pin input is detected.

<2> The Hi-Z state of the TOp and TOq pin outputs is canceled in synchronization with the carrier cycle of the timer after the rising edge of the TMOFFn pin input is detected.

Figure 7-105. Overcurrent Detection Example 6
(Example of the output of the TMOFFn (falling edge detection))

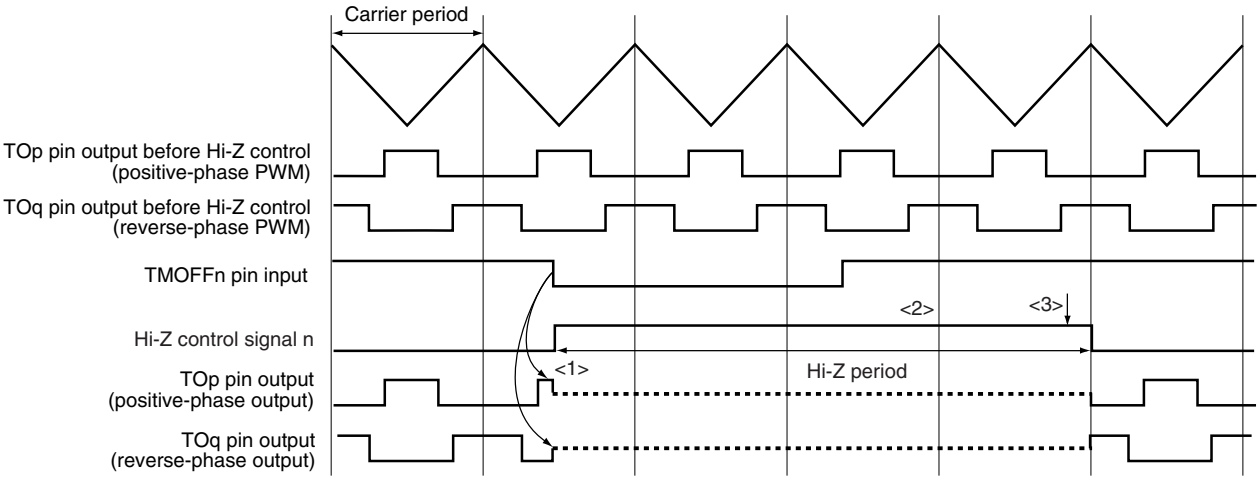

<1> The TOp and TOq pin outputs become a Hi-Z state when the falling edge of the TMOFFn pin input is detected.

<2> The Hi-Z state of the TOp and TOq pin outputs is not canceled even if the rising edge of the TMOFFn pin input is detected.

<3> The Hi-Z state of the TOp and TOq pin outputs is canceled in synchronization with the carrier cycle of the timer by writing 1 to the OPHTn bit.

Remark When n = 0: p= 02, q = 03
When n = 1: p= 06, q = 07

Figure 7-106. Overcurrent Detection Example 7

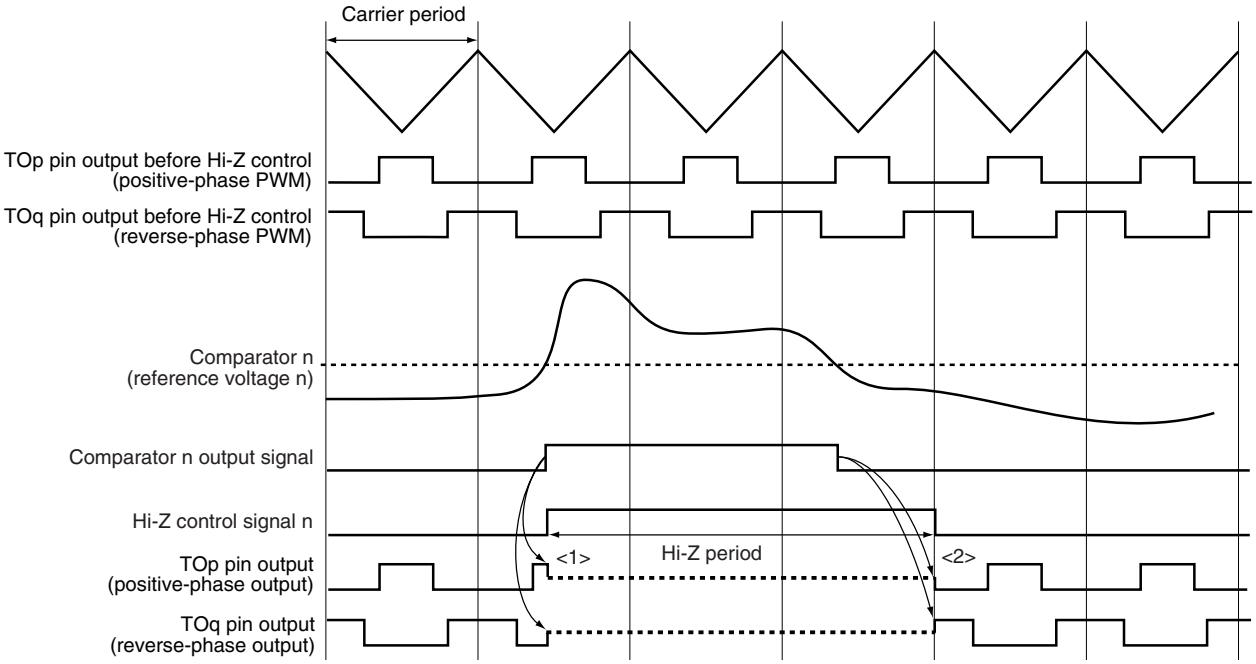

<1> The TOp and TOq pin outputs become a Hi-Z state when the rising edge of the comparator n output signal is detected.

<2> The Hi-Z state of the TOp and TOq pin outputs is canceled in synchronization with the carrier cycle of the timer after the falling edge of the comparator n output signal is detected.

Remark When n = 0: p= 02, q = 03
When n = 1: p= 06, q = 07

Figure 7-107. Overcurrent Detection Example 8

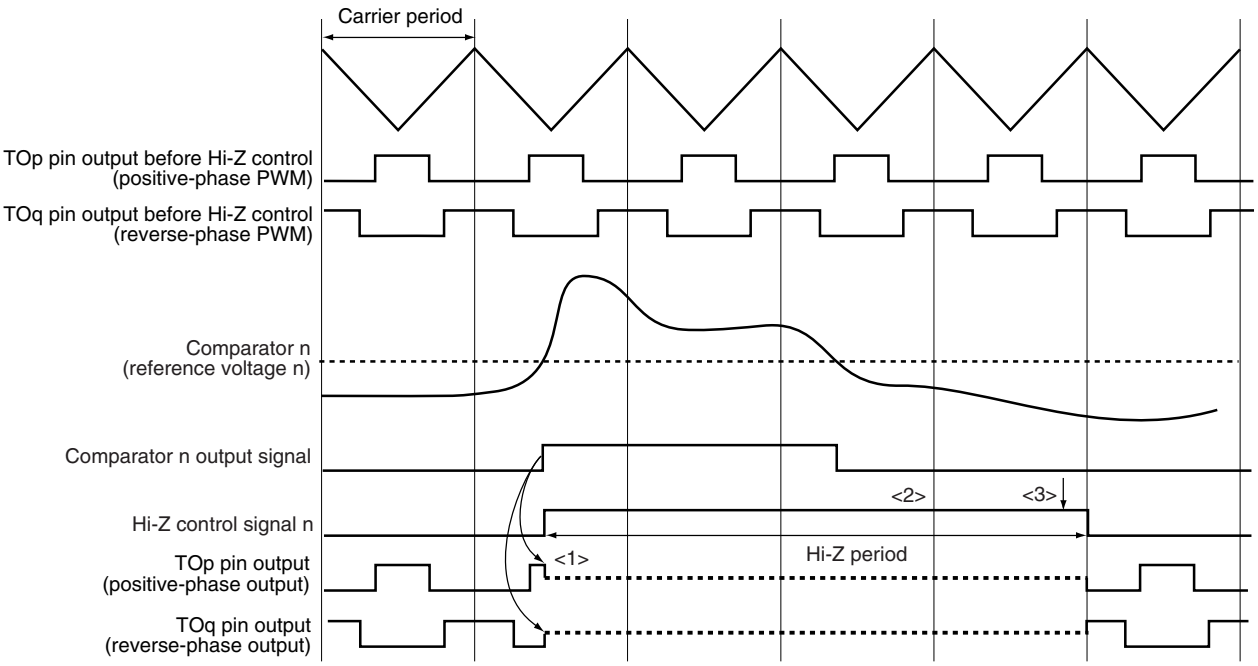

<1> The TOp and TOq pin outputs become a Hi-Z state when the rising edge of the comparator n output signal is detected.

<2> The Hi-Z state of the TOp and TOq pin outputs is not canceled even if the falling edge of the comparator n output signal is detected.

<3> The Hi-Z state of the TOp and TOq pin outputs is canceled in synchronization with the carrier cycle of the timer by writing 1 to the OPHTn bit.

Remark When n = 0: p= 02, q = 03
When n = 1: p= 06, q = 07

CHAPTER 8 COMPARATORS/ PROGRAMMABLE GAIN AMPLIFIERS

The number of input pins of the comparators differs, depending on the product.

Input pins of the comparators	78K0R/IB3	78K0R/IC3	78K0R/ID3	78K0R/IE3
CMP0P	√	√	√	√
CMP0M	√	√	√	√
CMP1P	–	√	√	√
CMP1M	√	√	√	√

8.1 Functions of Comparator and Programmable Gain Amplifier

The programmable gain amplifiers and comparators have the following functions.

○ Comparators

- A comparator is equipped with two channels (CMP0, CMP1P[Note]).
- Negative-side input pins (CMP0M, CMP1M) and a positive-side input pin (CMP0P, CMP1P) can be connected.
- The output signal of an programmable gain amplifier can be used as the positive-side input signal of a comparator. (In this case, the output signal is simultaneously input to both channels of comparators 0 and 1.)
- CMP0M and CMP1M pin inputs and the internal generation reference voltage (6 combinations for each comparator) can be selected as the reference voltage.
- The elimination width of the noise elimination digital filter can be selected.
- An interrupt request is generated when an overcurrent is detected (INTCMP0 and INTCMP1).
- The output signal of a comparator is connected to the timer array unit and sets the timer output pin (TOn) to a Hi-Z state.

○ Programmable gain amplifiers

- An programmable gain amplifier amplifies and outputs an analog voltage that is input. One among five amplification factors can be selected.
- The output signal of an programmable gain amplifier can be used as the positive-side input signal of a comparator. (In this case, the output signal is simultaneously input to both channels of comparators 0 and 1.)
- The output signal of an programmable gain amplifier can be selected as the analog input of an A/D converter.

Caution There is no positive-side input pin for comparator 1 in the 78K0R/IB3. Only the signal output from the programmable gain amplifier can be used for the input voltage.

○ Overcurrent detection function

The timer output pin (TOn) can be set to a Hi-Z state while an overcurrent flows by using an programmable gain amplifier and a comparator. Furthermore, a function to set the pin to a Hi-Z state can be selected from the following two functions.

- 2-stage overcurrent detection function
- Overcurrent/ electromotive force side detection function

Both functions can be used[Note] by setting two values (comparator 0 < comparator 1) of the reference voltage that set the pin to a Hi-Z state, and inputting the same signal to the positive-side inputs of comparators 0 and 1.

Note There is no positive-side input pin for comparator 1 in the 78K0R/IB3. When using the overcurrent detection function, input the signal that is output by the programmable gain amplifier to the positive-side input of both comparator 0 and comparator 1.

- 2-stage overcurrent detection function
  - <1> Reference voltage of comparator 0 < input signal voltage < reference voltage of comparator 1
    → Set the TOn pin to a Hi-Z state.
    Timer output is automatically restarted in synchronization with the timer cycle when the input signal voltage is lower than the reference voltage of comparator 0.
  - <2> Reference voltage of comparator 1 < input signal voltage
    → Set the TOn pin to a Hi-Z state.
    Timer output is automatically restarted in synchronization with the next timer cycle by setting a register, when the input signal voltage is lower than the reference voltage of comparator 0.
- Overcurrent/ electromotive force side detection function
  - <1> Input signal voltage (electromotive force) < comparator 0, or comparator 1 < input signal voltage (overcurrent)
    → Set the TOn pin to a Hi-Z state.
    Timer output is automatically restarted in synchronization with the timer cycle when the input signal voltage is higher than the reference voltage of comparator 0 or when it is lower than the reference voltage of comparator 1.

Remarks.1 For details of overcurrent detection function, see **7.5 Overcurrent Detection Function.**

2 n: Timer channel number (n = 02 to 07)

Figure 8-1. Block Diagram of Comparator/ Programmable Gain Amplifier (78K0R/IC3, 78K0R/ID3, 78K0R/IE3)

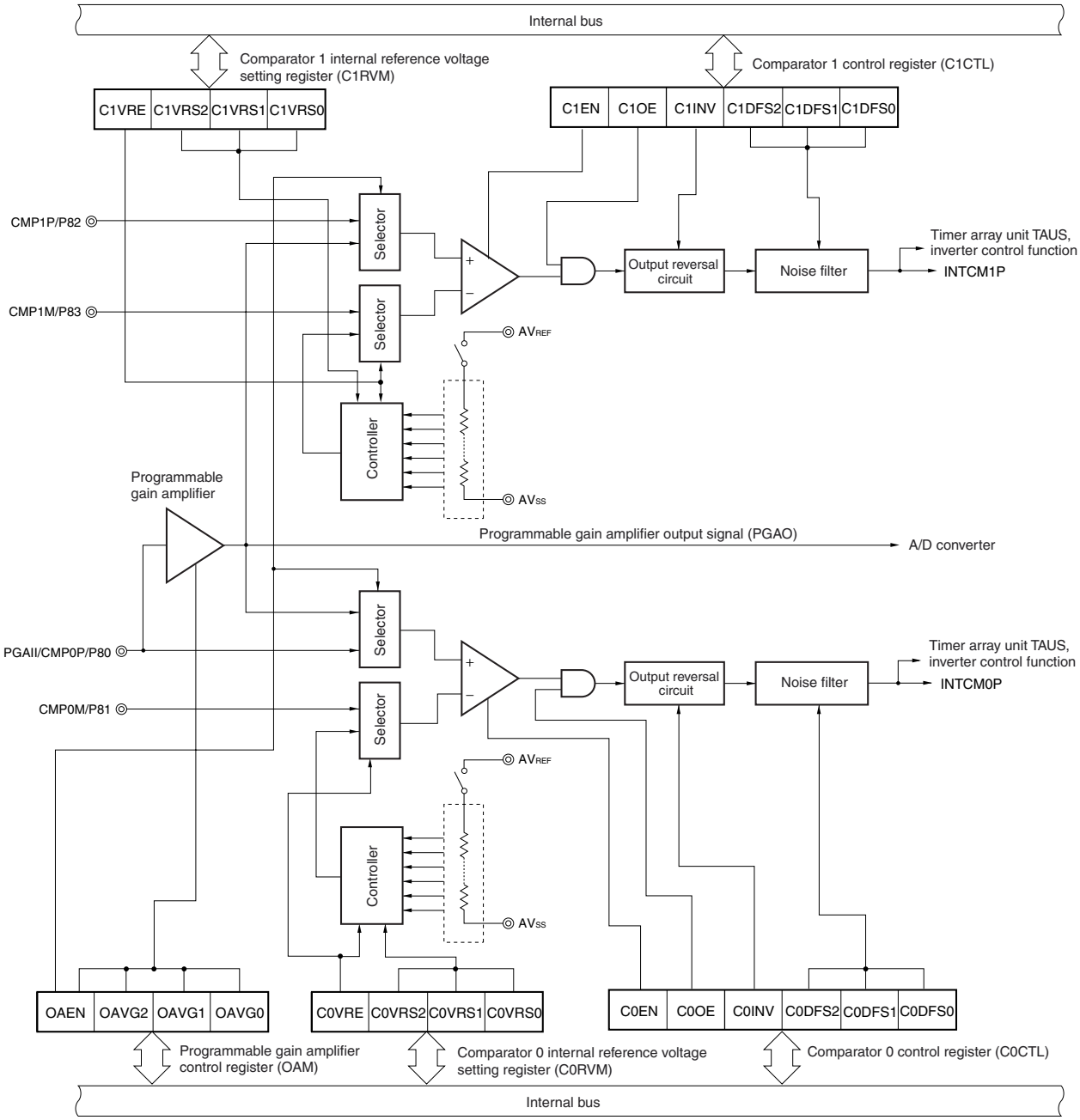

Figure 8-2. Block Diagram of Comparator/ Programmable Gain Amplifier (78K0R/IB3)

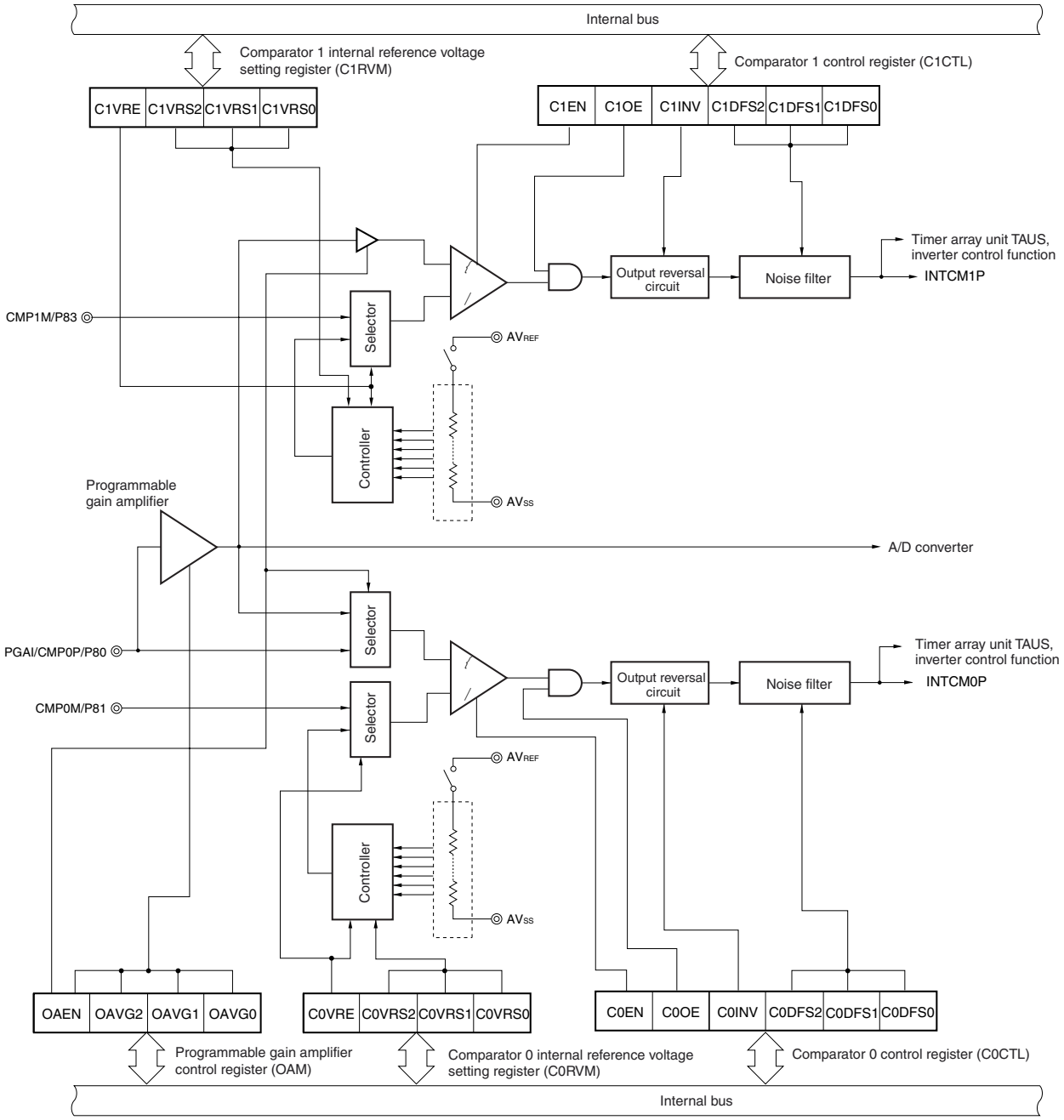

8.2 Configurations of Comparator and Programmable Gain Amplifier

The comparators and programmable gain amplifiers consist of the following hardware.

Table 8-1. Configurations of Comparator and Programmable Gain Amplifier

Item	Configuration
Control registers	Peripheral enable register 1 (PER1) Programmable gain amplifier control register (OAM) Comparator 0 and 1 control registers (C0CTL, C1CTL) Comparator 0 and 1 internal reference voltage setting registers (C0RVM, C1RVM) Port input mode register 8 (PIM8) Port mode register 8 (PM8)

8.3 Registers Controlling Comparators and Programmable Gain Amplifiers

The comparators and programmable gain amplifiers use the following eight registers.

- Peripheral enable register 1 (PER1)
- Programmable gain amplifier control register (OAM)
- Comparator 0 and 1 control registers (C0CTL, C1CTL)
- Comparator 0 and 1 internal reference voltage setting registers (C0RVM, C1RVM)
- Port input mode register 8 (PIM8)
- Port mode register 8 (PM8)

(1) Peripheral enable register 1 (PER1)

PER1 is used to enable or disable supplying the clock to the peripheral hardware macro. Power consumption and noise are reduced by stopping the clock supply to unused hardware.

Make sure to set bit 3 (OACMPEN) to 1 to use a comparator or an programmable gain amplifier.

PER1 can be set by a 1-bit or 8-bit memory manipulation instruction.

Reset signal generation clears this register to 00H.

Cautions 1. Make sure to set OACMPEN to 1 first, when setting the comparator or programmable gain amplifier. Writing to the control register of the comparator or programmable gain amplifier will be ignored and all values read will be initialized when OACMPEN is set to 0.

2. Make sure to set bits 0 to 2 and bits 4 to 7 of the PER1 register to "0".

Figure 8-3. Format of Peripheral Enable Register 1 (PER1)

Address: F00F1H After reset: 00H R/W

Symbol	7	6	5	4	<3>	2	1	0
PER1	0	0	0	0	OACMPEN	0	0	0

OACMPEN	Comparator/programmable gain amplifier input clock control
0	Stops input clock supply • The SFR used with the comparator or programmable gain amplifier cannot be written. • The comparator or programmable gain amplifier is reset.
1	Enables input clock supply • The SFR used with the comparator or programmable gain amplifier can be read and written.

(2) Programmable gain amplifier control register (OAM)

This register is used to enable or disable the operation of an programmable gain amplifier and set the amplification factor.

OAM can be set by a 1-bit or 8-bit memory manipulation instruction.

Reset signal generation clears this register to 00H.

Figure 8-4. Format of Programmable Gain Amplifier Control Register (OAM)

Address: F0240H After reset: 00H R/W

Symbol	<7>	6	5	4	3	2	1	0
OAM	OAEN	0	0	0	0	OAVG2	OAVG1	OAVG0

OAEN	Programmable gain amplifier operation control
0	Stops operation
1	Enables operation Enables external input from the programmable gain amplifier input pin (PGAI) Inputs the programmable gain amplifier output signal as the positive-side input voltage of comparators 0 and 1

OAVG2	OAVG1	OAVG0	Input voltage amplification factor setting
0	0	1	×4
0	1	0	×6
0	1	1	×8
1	0	0	×10
1	0	1	×12
Other than the above			Setting prohibited

Cautions 1. Set the amplification factor before enabling (OAEN = 1) the operation of the programmable gain amplifier. Changing the amplification factor setting in the operation enabled state (OAEN = 1) is prohibited.

2. Set the CnCTL register after setting OAM register.

3. To select a programmable gain amplifier output signal (PGAO) as an analog input of the A/D converter, set OAEN = 1, wait for 3 μs by software, then start A/D conversion (ADCS = 1).

Remark n = 0, 1

(3) Comparator n control register (CnCTL)

This register is used to control the operation of comparator n, enable or disable comparator output, reverse the output, and set the noise elimination width.

CnCTL can be set by a 1-bit or 8-bit memory manipulation instruction.

Reset signal generation clears this register to 00H.

Figure 8-5. Format of Comparator n Control Register (CnCTL)

Address: F0241H (C0CTL), F0242H (C1CTL) After reset: 00H R/W

Symbol	<7>	6	5	4	3	2	1	0
CnCTL	CnEN	0	0	CnOE	CnINV	CnDFS2	CnDFS1	CnDFS0

CnEN	Comparator operation control
0	Stops operation
1	Enables operation Enables input to the external pins on the positive and negative sides of comparator n[Note]

CnOE	Enabling or disabling of comparator output
0	Disables output (output signal = fixed to low level)
1	Enables output

CnINV	Output reversal setting
0	Forward
1	Reverse

CnDFS2	CnDFS1	CnDFS0	Noise elimination width setting (f_{CLK} = 20 MHz)
0	0	0	Noise filter unused
0	0	1	250 ns
0	1	0	500 ns
0	1	1	1 μs
1	0	0	2 μs
Other than the above			Setting prohibited

(**Note**, **Caution**, and **Remark** are listed on the next page.)

Notes 1. If OAEN = 1 (bit 7 of programmable gain amplifier control register (OAM)) and CnEN bit is set to 1, a programmable gain amplifier output signal will be input to the positive-side input of comparator n.

2. There is no positive-side external input pin for comparator 1 in the 78K0R/IB3. Only the signal output from the programmable gain amplifier can be used as the positive-side input for comparator 1.

Cautions 1. Rewrite CnINV and CnDFS2 to CnDFS0 after setting the comparator output to the disabled state (CnOE = 0).

2. With the noise elimination width, an extra CPU clock (f_{CLK}) may be eliminated from the setting value.
(Example: When f_{CLK} = 20 MHz, CnDFS2 to CnDFS0 = 001, noise elimination width = 250 to 300 ns)

3. To operate the comparator in combination with a programmable gain amplifier, set the operation of the comparator after setting the operation of the programmable gain amplifier (see Figure 8-11 and Figure 8-12).

4. The negative-side external pin input of the comparator will be cutoff when CnVRE of the CnRVM register is set (1), regardless of the value that enables or disables the comparator operation (CnEN).

5. Enable interrupt signals after setting CnEN = 1 and then waiting for 1 μs by software.

Remarks 1. f_{CLK}: CPU or peripheral hardware clock frequency

2. n = 0, 1

(4) Comparator n internal reference voltage selection register (CnRVM)

This register is used to set the internal reference voltage of comparator n. The internal reference voltage can be selected from six voltages that use AV_{REF}.

CnRVM can be set by a 1-bit or 8-bit memory manipulation instruction.

Reset signal generation clears this register to 00H.

Figure 8-6. Format of Comparator n Internal Reference Voltage Selection Register (CnRVM)

Address: F0243H (C0RVM), F0244H (C1RVM) After reset: 00H R/W

Symbol	<7>	6	5	4	3	2	1	0
CnRVM	CnVRE	0	0	0	0	CnVRS2	CnVRS1	CnVRS0

CnVRE	Internal reference voltage operation control
0	Stops operation
1	Enables operation Connects the internal reference voltage to the negative-side input of comparator n

CnVRS2	CnVRS1	CnVRS0	Reference voltage setting	
			Reference voltage settable with comparator 0 (n = 0)	Reference voltage settable with comparator 1 (n = 1)
0	0	0	Setting prohibited	
0	0	1	$2AV_{REF}/16$	$3AV_{REF}/16$
0	1	0	$4AV_{REF}/16$	$5AV_{REF}/16$
0	1	1	$6AV_{REF}/16$	$7AV_{REF}/16$
1	0	0	$8AV_{REF}/16$	$9AV_{REF}/16$
1	0	1	$10AV_{REF}/16$	$11AV_{REF}/16$
1	1	0	$12AV_{REF}/16$	$13AV_{REF}/16$
1	1	1	Setting prohibited	

Cautions 1. The operation of the comparator is controlled by CnEN when the operation of the internal reference voltage is stopped (CnVRE = 0).

2. The negative-side external pin input of the comparator will be cutoff when CnVRE is set (1), regardless of the value that enables or disables the comparator operation (CnEN).

3. Set the reference voltage before enabling the operation of the internal reference voltage (CnVRE = 1). Changing the reference voltage setting in the operation enabled state (CnVRE = 1) is prohibited.

4. Be sure to change the CnRVM register while CnEN = 0 (comparator operation stopped).

Remark n = 0, 1

(5) Port input mode register 8 (PIM8)

This register is used to enable or disable port 8 input in 1-bit units.

Set to digital input disable (use port8 as the analog input) to use a comparator or an programmable gain amplifier. Set to input enable to use the port function or the external interrupt function and timer Hi-Z control function, because digital input disable (use port8 as the analog input) is set by default.

PIM8 can be set by a 1-bit or 8-bit memory manipulation instruction.

Reset signal generation clears this register to 00H.

Figure 8-7. Format of Port Input Mode Register 8 (PIM8)

Address: F0048H After reset: 00H R/W

Symbol	7	6	5	4	3	2	1	0
PIM8	0	0	0	0	PIM83	PIM82 Note	PIM81	PIM80

PIM8n	Selection of enabling or disabling P8n pin digital input (n = 0 to 3)
0	Disables digital input (use port8 as the analog input)
1	Enables digital input

Note PIM82 bit is not provided in the 78K0R/IB3.

(6) Port mode register 8 (PM8)

This register is used to set port 8 input or output in 1-bit units.

Set the PM80 to PM83 bits to 1 to use the P80/CMP0P/TMOFF0/INTP3/PGAI, P81/CMP0M, P82/CMP1P/TMOFF1/INTP7, or P83/CMP1M pin as the positive-side or negative-side input function of the comparator, or the programmable gain amplifier input function.

The output latches of P80 to P83 may be 0 or 1 at this time.

PM80 to PM83 can be set by a 1-bit or 8-bit memory manipulation instruction.

Reset signal generation sets this register to FFH.

Figure 8-8. Format of Port Mode Register 8 (PM8)

Address: FFF28H After reset: FFH R/W

Symbol	7	6	5	4	3	2	1	0
PM8	1	1	1	1	PM83	PM82	PM81	PM80

PM8n	P8n pin I/O mode selection (n = 0 to 3)
0	Output mode (output buffer on)
1	Input mode (output buffer off)

Note PIM82 bit is not provided in the 78K0R/IB3.

Cautions 1. The port function that is alternatively used as the CMP0M, CMP1M pin can be used in the input mode, when the CMP0P, CMP1P pin is selected as the positive-side input of the comparator, and the internal reference voltage is used on the negative side. Using the output mode, however, is prohibited.

2. There is no P82/CMP1P/TMOFF1/INTP7 pin in the 78K0R/IB3.

8.4 Operations of Comparator and Programmable Gain Amplifier

8.4.1 Starting comparator and programmable gain amplifier operation

The procedures for starting the operation of a comparator and an programmable gain amplifier are described below, separately for each use method.

○ Using only a comparator
- Using the external pin input for the comparator reference voltage (Figure 8-9)
- Using the internal reference voltage for the comparator reference voltage (Figure 8-10)

○ Using a comparator and an programmable gain amplifier (using the programmable gain amplifier output voltage as the comparator compare voltage input)
- Using the external pin input for the comparator reference voltage (Figure 8-11)
- Using the internal reference voltage for the comparator reference voltage (Figure 8-12)

○ Using the programmable gain amplifier output voltage as the A/D converter analog input (Figure 8-13)

Note In the 78K0R/IB3, only comparator 0 can be used as a comparator by itself. Comparator 1 has no positive-side input pin, so it can only be used in combination with a programmable gain amplifier.

Figure 8-9. Using the External Pin Input for the Comparator Reference Voltage (Using Only a Comparator)

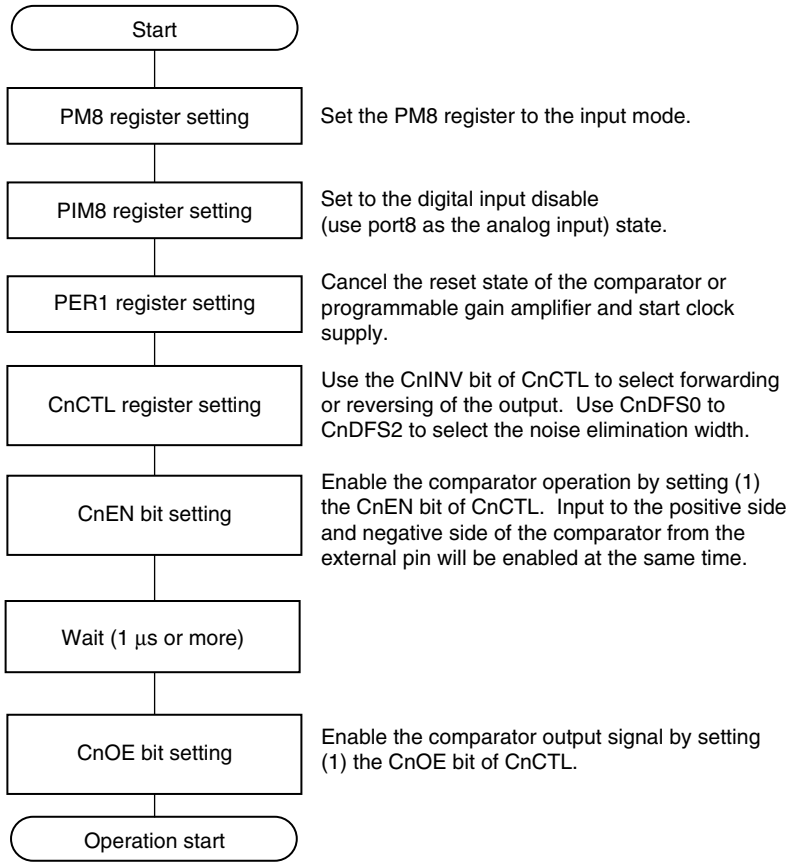

Remark n = 0 and 1 (78K0R/IB3: n = 0).

Figure 8-10. Using the Internal Reference Voltage for the Comparator Reference Voltage (Using Only a Comparator)

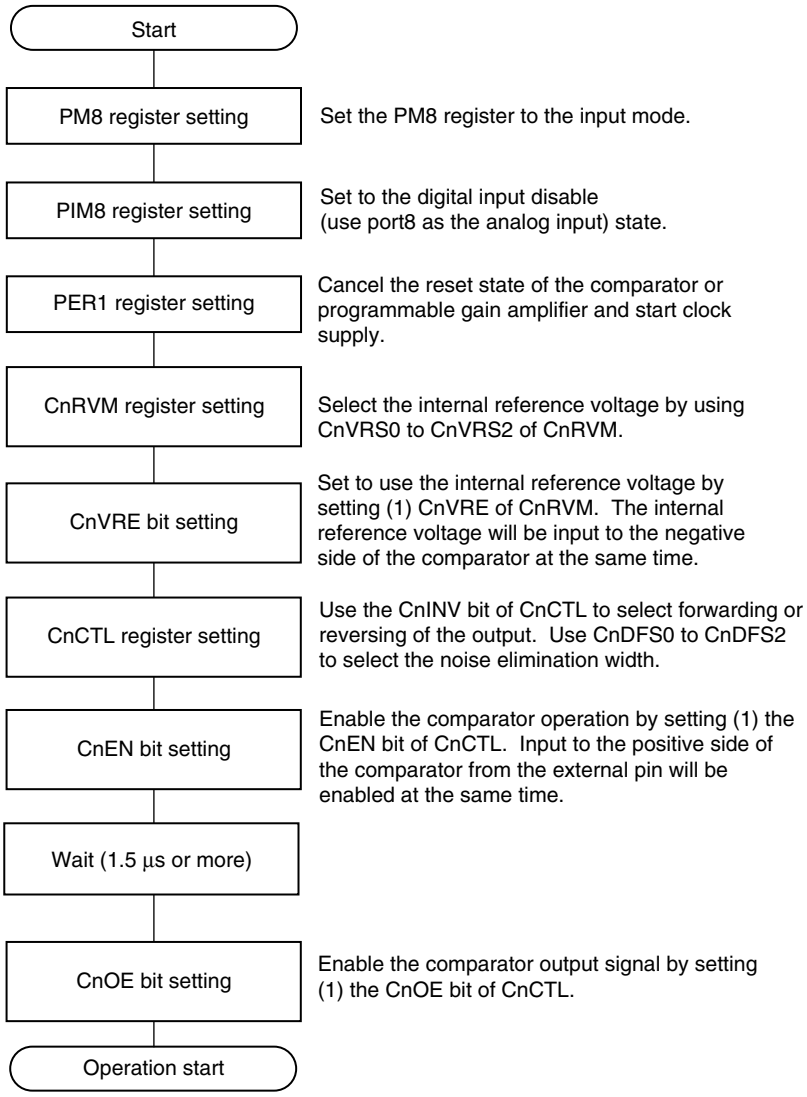

Remark n = 0 and 1 (78K0R/IB3: n = 0).

Figure 8-11. Using the External Pin Input for the Comparator Reference Voltage (Using a Comparator and an Programmable Gain Amplifier)

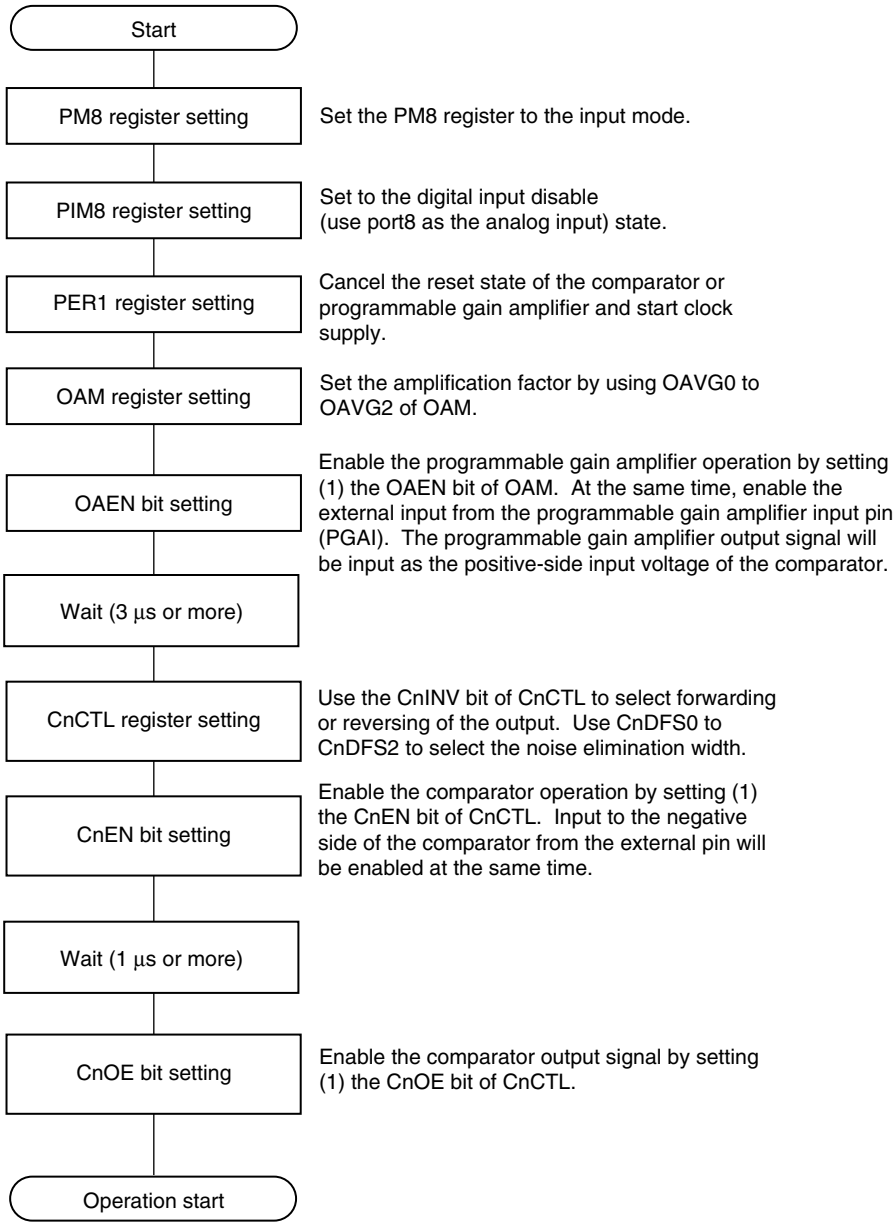

Remark n = 0, 1

Figure 8-12. Using the Internal Reference Voltage for the Comparator Reference Voltage (Using a Comparator and an Programmable gain Amplifier)

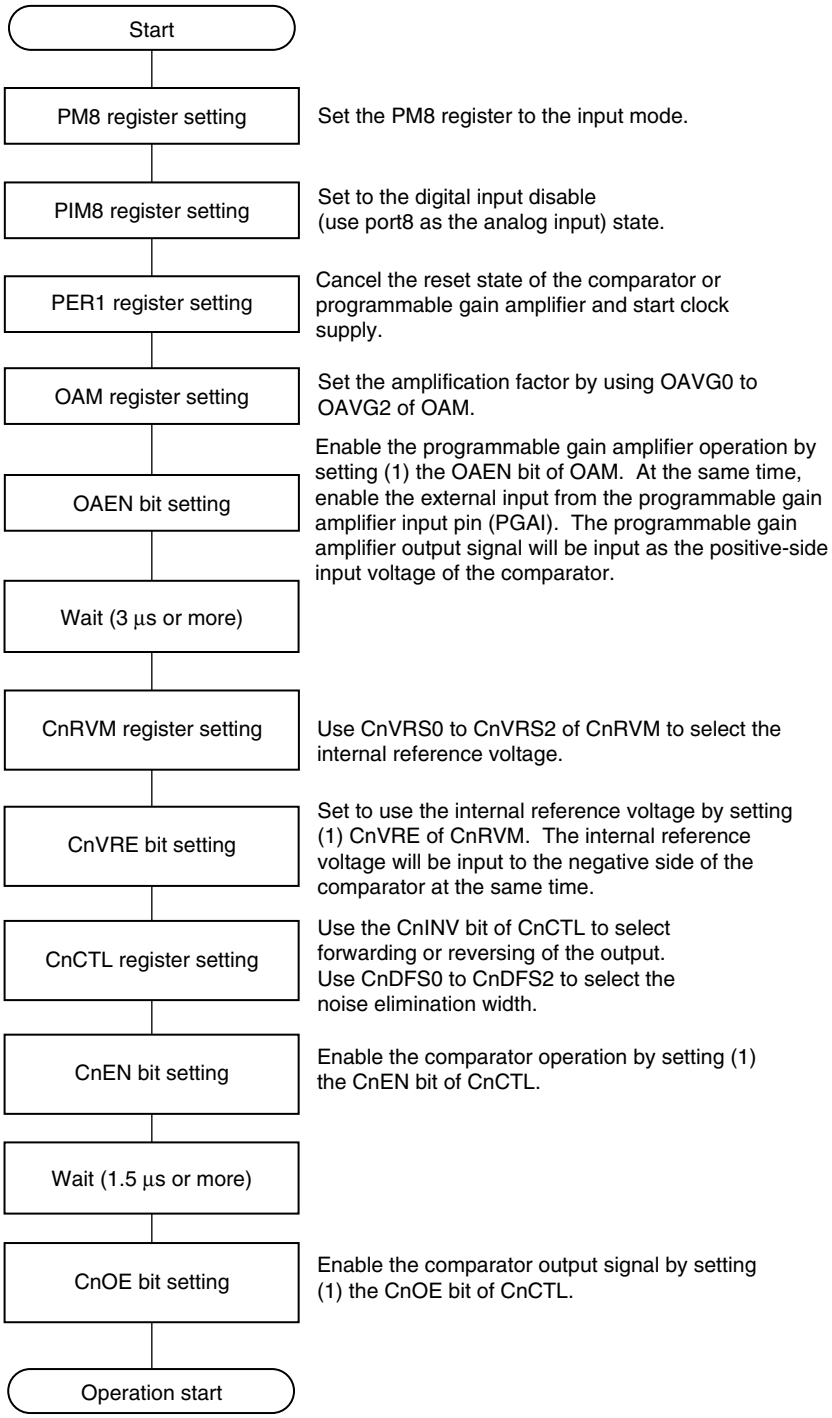

Remark n = 0, 1

Perform the following settings before selecting the programmable gain amplifier output signal as the analog input by using the analog input channel specification register (ADS) of the A/D converter (refer to **12.4.1 Basic operations of A/D converter**).

Figure 8-13. Using the Programmable gain Amplifier Output Voltage as the A/D Converter Analog Input

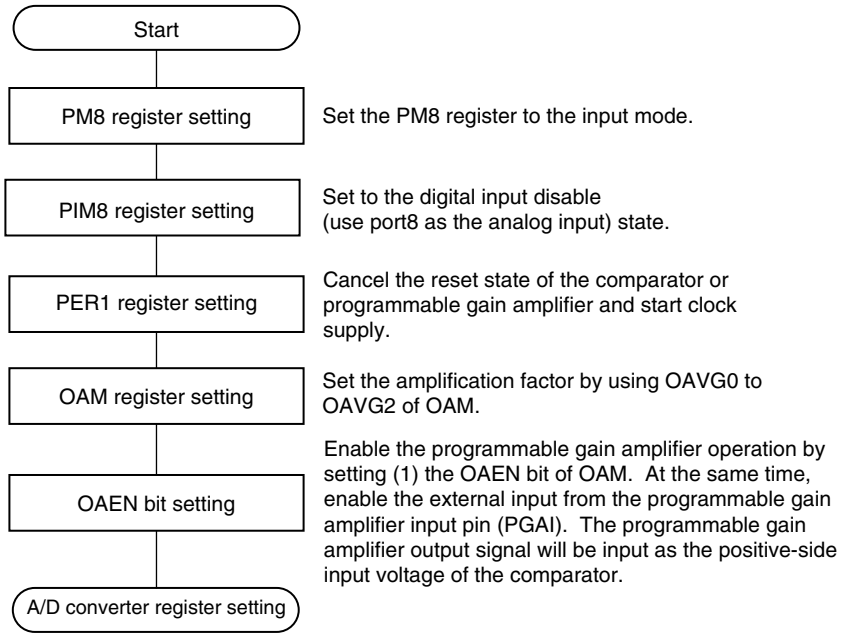

Caution Ensure that 3 μs elapses before A/D conversion starts after setting the OAEN bit.

Remark n = 0, 1

8.4.2 Stopping comparator and programmable gain amplifier operation

The procedures for stopping the operation of a comparator and an programmable gain amplifier are described below, separately for each use method.

○ Using only a comparator (Figure 8-14)
○ Using the programmable gain amplifier output voltage as the comparator compare voltage input (Figure 8-15)
○ Using the programmable gain amplifier output voltage as the A/D converter analog input (Figure 8-16)

Figure 8-14. Using Only a Comparator

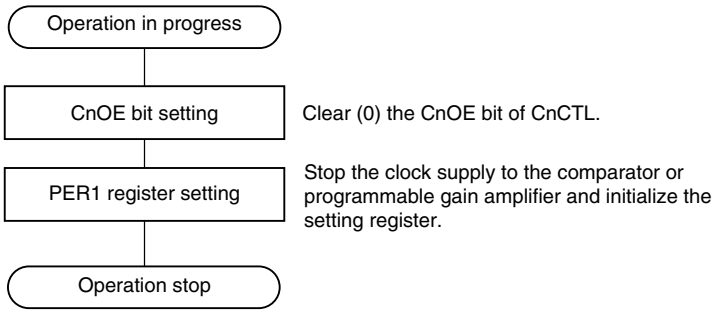

Remark n = 0 and 1 (78K0R/IB3: n = 0).

Figure 8-15. Using the Programmable gain Amplifier Output Voltage as the Comparator Compare Voltage Input

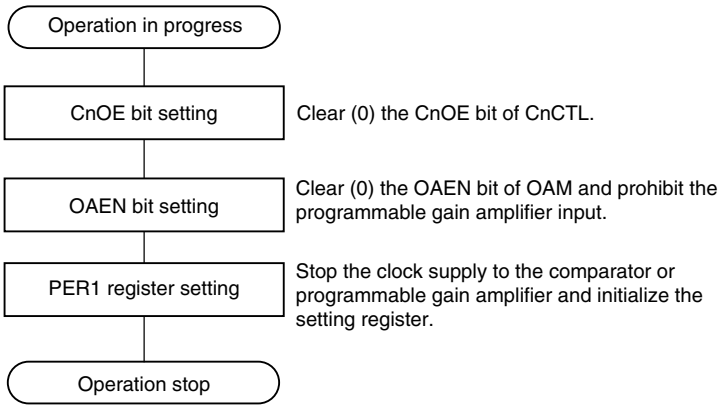

Figure 8-16. Using the Programmable gain Amplifier Output Voltage as the A/D Converter Analog Input

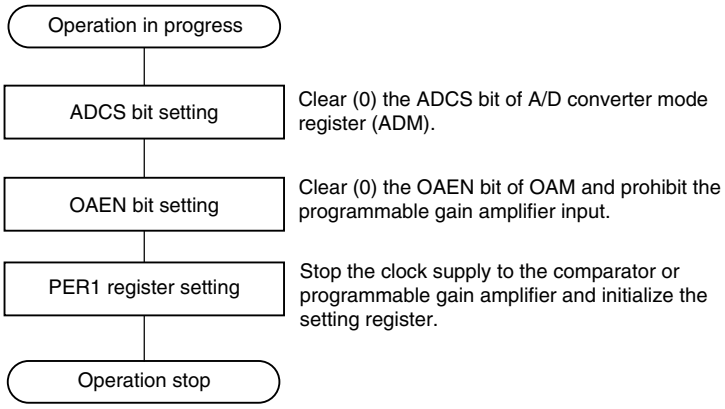

Remark n = 0, 1

CHAPTER 9 REAL-TIME COUNTER

Remark The 78K0R/IB3 doesn't have the real-time counter.

9.1 Functions of Real-Time Counter

The real-time counter has the following features.

- Having counters of year, month, week, day, hour, minute, and second, and can count up to 99 years.
- Constant-period interrupt function (period: 1 month to 0.5 seconds)
- Alarm interrupt function (alarm: week, hour, minute)
- Interval interrupt function

9.2 Configuration of Real-Time Counter

The real-time counter includes the following hardware.

Table 9-1. Configuration of Real-Time Counter

Item	Configuration
Control registers	Peripheral enable register 0 (PER0)
	Real-time counter control register 0 (RTCC0)
	Real-time counter control register 1 (RTCC1)
	Real-time counter control register 2 (RTCC2)
	Sub-count register (RSUBC)
	Second count register (SEC)
	Minute count register (MIN)
	Hour count register (HOUR)
	Day count register (DAY)
	Week count register (WEEK)
	Month count register (MONTH)
	Year count register (YEAR)
	Watch error correction register (SUBCUD)
	Alarm minute register (ALARMWM)
	Alarm hour register (ALARMWH)
	Alarm week register (ALARMWW)

Figure 9-1. Block Diagram of Real-Time Counter

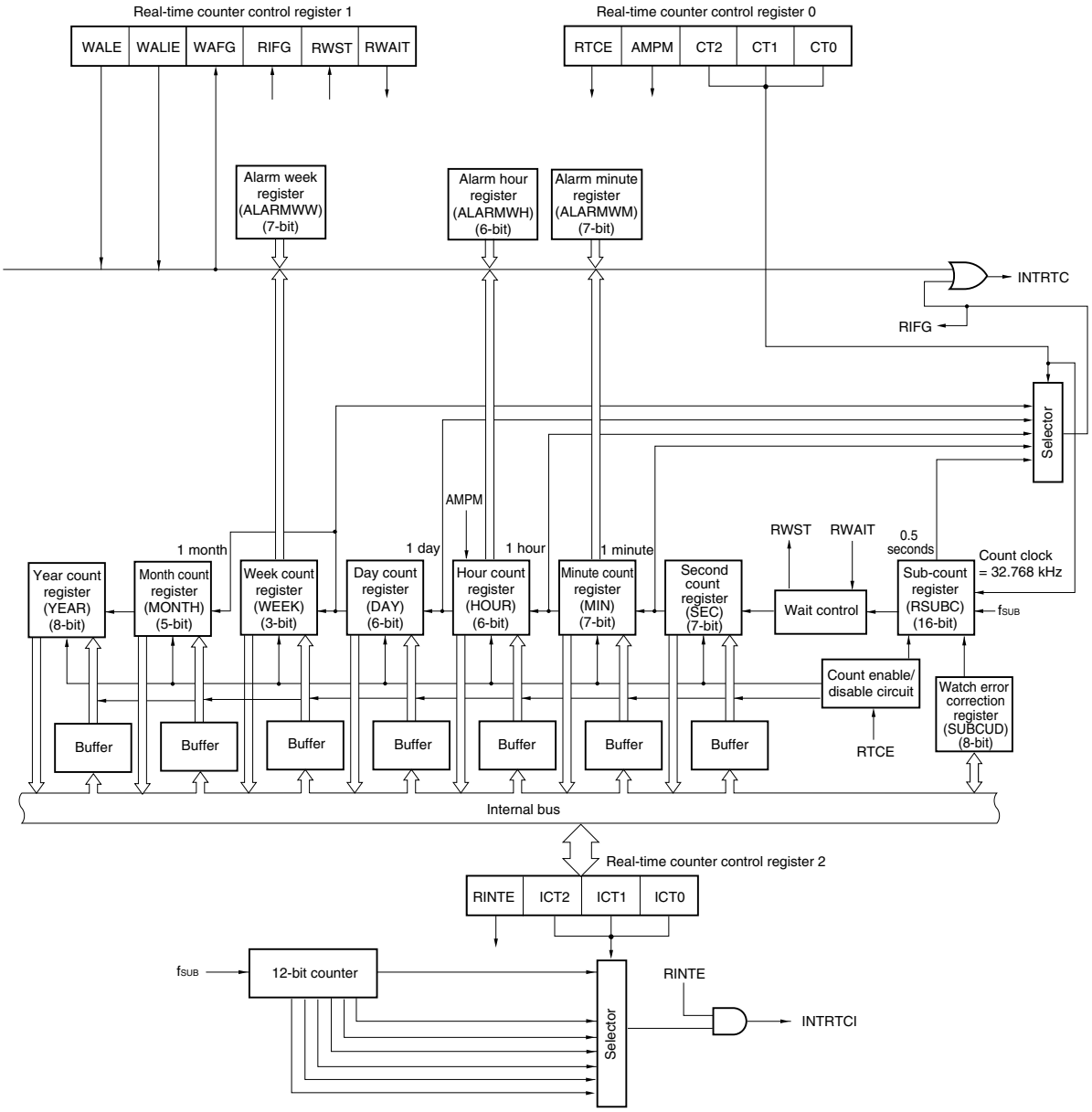

9.3 Registers Controlling Real-Time Counter

The real-time counter is controlled by the following 16 registers.

- Peripheral enable register 0 (PER0)
- Real-time counter control register 0 (RTCC0)
- Real-time counter control register 1 (RTCC1)
- Real-time counter control register 2 (RTCC2)
- Sub-count register (RSUBC)
- Second count register (SEC)
- Minute count register (MIN)
- Hour count register (HOUR)
- Day count register (DAY)
- Week count register (WEEK)
- Month count register (MONTH)
- Year count register (YEAR)
- Watch error correction register (SUBCUD)
- Alarm minute register (ALARMWM)
- Alarm hour register (ALARMWH)
- Alarm week register (ALARMWW)

(1) Peripheral enable register 0 (PER0)

PER0 is used to enable or disable supplying the clock to the peripheral hardware macro. Clock supply to a hardware macro that is not used is stopped in order to reduce the power consumption and noise.

When the real-time counter is used, be sure to set bit 7 (RTCEN) of this register to 1.

PER0 can be set by a 1-bit or 8-bit memory manipulation instruction.

Reset signal generation clears this register to 00H.

Figure 9-2. Format of Peripheral Enable Register 0 (PER0)

Address: F00F0H After reset: 00H R/W

Symbol	<7>	6	<5>	<4>	3	<2>	1	0
PER0	RTCEN	0	ADCEN	IICAEN Note 1	0	SAU0EN	0	0

RTCEN	Control of real-time counter (RTC) input clock Note 2
0	Stops input clock supply. • SFR used by the real-time counter (RTC) cannot be written. • The real-time counter (RTC) is in the reset status.
1	Enables input clock supply. • SFR used by the real-time counter (RTC) can be read/written.

Notes 1. IICAEN bit is not provided in the 78K0R/IB3 and the 38-pin and 44 pin products of the 78K0R/IC3. In the 78K0R/IB3 and the 38-pin and 44 pin products of the 78K0R/IC3, bit 4 of PER0 register is fixed to 0.

2. RTCEN is used to supply or stop the clock used when accessing the real-time counter (RTC) register from the CPU. RTCEN cannot control supply of the operating clock (f_{SUB}) to RTC.

Cautions 1. When using the real-time counter, first set RTCEN to 1, while oscillation of the subsystem clock (f_{SUB}) is stable. If RTCEN = 0, writing to a control register of the real-time counter is ignored, and, even if the register is read, only the default value is read.

2. Be sure to clear bits 0, 1, 3, and 6 (78K0R/IB3 and 38-pin and 44-pin products of the 78K0R/IC3: 0, 1, 3, 4 and 6) of PER0 register to 0.

(2) Real-time counter control register 0 (RTCC0)

The RTCC0 register is an 8-bit register that is used to start or stop the real-time counter operation, and set a 12- or 24-hour system and the constant-period interrupt function.

RTCC0 can be set by a 1-bit or 8-bit memory manipulation instruction.

Reset signal generation clears this register to 00H.

Figure 9-3. Format of Real-Time Counter Control Register 0 (RTCC0)

Address: FFF9DH After reset: 00H R/W

Symbol	<7>	6	5	4	3	2	1	0
RTCC0	RTCE	0	0	0	AMPM	CT2	CT1	CT0

RTCE	Real-time counter operation control
0	Stops counter operation.
1	Starts counter operation.

AMPM	Selection of 12-/24-hour system
0	12-hour system (a.m. and p.m. are displayed.)
1	24-hour system
• To change the value of AMPM, set RWAIT (bit 0 of RTCC1) to 1, and re-set the hour count register (HOUR). • Table 9-2 shows the displayed time digits that are displayed.	

CT2	CT1	CT0	Constant-period interrupt (INTRTC) selection
0	0	0	Does not use constant-period interrupt function.
0	0	1	Once per 0.5 s (synchronized with second count up)
0	1	0	Once per 1 s (same time as second count up)
0	1	1	Once per 1 m (second 00 of every minute)
1	0	0	Once per 1 hour (minute 00 and second 00 of every hour)
1	0	1	Once per 1 day (hour 00, minute 00, and second 00 of every day)
1	1	×	Once per 1 month (Day 1, hour 00 a.m., minute 00, and second 00 of every month)
When changing the values of CT2 to CT0 while the counter operates (RTCE = 1), rewrite the values of CT2 to CT0 after disabling interrupt servicing INTRTC by using the interrupt mask flag register. Furthermore, after rewriting the values of CT2 to CT0, enable interrupt servicing after clearing the RIFG and RTCIF flags.			

Caution Be sure to clear bits 4 to 6 to 0.

Remark ×: don't care

(3) Real-time counter control register 1 (RTCC1)

The RTCC1 register is an 8-bit register that is used to control the alarm interrupt function and the wait time of the counter.

RTCC1 can be set by a 1-bit or 8-bit memory manipulation instruction.

Reset signal generation clears this register to 00H.

Figure 9-4. Format of Real-Time Counter Control Register 1 (RTCC1) (1/2)

Address: FFF9EH After reset: 00H R/W

Symbol	<7>	<6>	5	<4>	<3>	2	<1>	<0>
RTCC1	WALE	WALIE	0	WAFG	RIFG	0	RWST	RWAIT

WALE	Alarm operation control
0	Match operation is invalid.
1	Match operation is valid.
When setting a value to the WALE bit while the counter operates (RTCE = 1) and WALIE = 1, rewrite the WALE bit after disabling interrupt servicing INTRTC by using the interrupt mask flag register. Furthermore, clear the WAFG and RTCIF flags after rewriting the WALE bit. When setting each alarm register (WALIE flag of RTCC1, the ALARMWM register, the ALARMWH register, and the ALARMWW register), set match operation to be invalid (“0”) for the WALE bit.	

WALIE	Control of alarm interrupt (INTRTC) function operation
0	Does not generate interrupt on matching of alarm.
1	Generates interrupt on matching of alarm.

WAFG	Alarm detection status flag
0	Alarm mismatch
1	Detection of matching of alarm
This is a status flag that indicates detection of matching with the alarm. It is valid only when WALE = 1 and is set to “1” one clock (32.768 kHz) after matching of the alarm is detected. This flag is cleared when “0” is written to it. Writing “1” to it is invalid.	

RIFG	Constant-period interrupt status flag
0	Constant-period interrupt is not generated.
1	Constant-period interrupt is generated.
This flag indicates the status of generation of the constant-period interrupt. When the constant-period interrupt is generated, it is set to “1”. This flag is cleared when “0” is written to it. Writing “1” to it is invalid.	

RWST	Wait status flag of real-time counter
0	Counter is operating.
1	Mode to read or write counter value
This status flag indicates whether the setting of RWAIT is valid. Before reading or writing the counter value, confirm that the value of this flag is 1.	

Figure 9-4. Format of Real-Time Counter Control Register 1 (RTCC1) (2/2)

RWAIT	Wait control of real-time counter
0	Sets counter operation.
1	Stops SEC to YEAR counters. Mode to read or write counter value

This bit controls the operation of the counter.
Be sure to write “1” to it to read or write the counter value.
Because RSUBC continues operation, complete reading or writing of it in 1 second, and clear this bit back to 0.
When RWAIT = 1, it takes up to 1 clock (32.768 kHz) until the counter value can be read or written.
If RSUBC overflows when RWAIT = 1, it counts up after RWAIT = 0. If the second count register is written, however, it does not count up because RSUBC is cleared.

Caution If writing is performed to the RTCC1 register with a 1-bit manipulation instruction, the RIFG flag and WAFG flag may be cleared. Therefore, to perform writing to the RTCC1 register, be sure to use an 8-bit manipulation instruction. To prevent the RIFG flag and WAFG flag from being cleared during writing, void writing by setting 1 to the corresponding bit. If the RIFG flag and WAFG flag are not used and the value may be changed, the RTCC1 register may be written by using a 1-bit manipulation instruction.

Remark Fixed-cycle interrupts and alarm match interrupts use the same interrupt source (INTRTC). When using these two types of interrupts at the same time, which interrupt occurred can be judged by checking the fixed-cycle interrupt status flag (RIFG) and the alarm detection status flag (WAFG) upon INTRTC occurrence.

(4) Real-time counter control register 2 (RTCC2)

The RTCC2 register is an 8-bit register that is used to control the interval interrupt function.

RTCC2 can be set by a 1-bit or 8-bit memory manipulation instruction.

Reset signal generation clears this register to 00H.

Figure 9-5. Format of Real-Time Counter Control Register 2 (RTCC2)

Address: FFF9FH After reset: 00H R/W

Symbol	<7>	6	5	4	3	2	1	0
RTCC2	RINTE	0	0	0	0	ICT2	ICT1	ICT0

RINTE	ICT2	ICT1	ICT0	Interval interrupt (INTRTCI) selection
0	×	×	×	Interval interrupt is not generated.
1	0	0	0	$2^6/f_{XT}$ (1.953125 ms)
1	0	0	1	$2^7/f_{XT}$ (3.90625 ms)
1	0	1	0	$2^8/f_{XT}$ (7.8125 ms)
1	0	1	1	$2^9/f_{XT}$ (15.625 ms)
1	1	0	0	$2^{10}/f_{XT}$ (31.25 ms)
1	1	0	1	$2^{11}/f_{XT}$ (62.5 ms)
1	1	1	×	$2^{12}/f_{XT}$ (125 ms)

Cautions 1. Change ICT2, ICT1, and ICT0 when RINTE = 0.

2. Be sure to clear bits 3 to 6 to 0.

(5) Sub-count register (RSUBC)

The RSUBC register is a 16-bit register that counts the reference time of 1 second of the real-time counter. It takes a value of 0000H to 7FFFH and counts 1 second with a clock of 32.768 kHz.

RSUBC can be set by a 16-bit memory manipulation instruction.

Reset signal generation clears this register to 0000H.

Cautions 1. When a correction is made by using the SUBCUD register, the value may become 8000H or more.

2. This register is also cleared by reset effected by writing the second count register.

3. The value read from this register is not guaranteed if it is read during operation, because a value that is changing is read.

Figure 9-6. Format of Sub-Count Register (RSUBC)

Address: FFF90H After reset: 0000H R

Symbol	7	6	5	4	3	2	1	0
RSUBC	SUBC7	SUBC6	SUBC5	SUBC4	SUBC3	SUBC2	SUBC1	SUBC0

Address: FFF91H After reset: 0000H R

Symbol	7	6	5	4	3	2	1	0
RSUBC	SUBC15	SUBC14	SUBC13	SUBC12	SUBC11	SUBC10	SUBC9	SUBC8

(6) Second count register (SEC)

The SEC register is an 8-bit register that takes a value of 0 to 59 (decimal) and indicates the count value of seconds.

It counts up when the sub-counter overflows.

When data is written to this register, it is written to a buffer and then to the counter up to 2 clocks (32.768 kHz) later. Set a decimal value of 00 to 59 to this register in BCD code.

SEC can be set by an 8-bit memory manipulation instruction.

Reset signal generation clears this register to 00H.

Figure 9-7. Format of Second Count Register (SEC)

Address: FFF92H After reset: 00H R/W

Symbol	7	6	5	4	3	2	1	0
SEC	0	SEC40	SEC20	SEC10	SEC8	SEC4	SEC2	SEC1

(7) Minute count register (MIN)

The MIN register is an 8-bit register that takes a value of 0 to 59 (decimal) and indicates the count value of minutes.

It counts up when the second counter overflows.

When data is written to this register, it is written to a buffer and then to the counter up to 2 clocks (32.768 kHz) later. Even if the second count register overflows while this register is being written, this register ignores the overflow and is set to the value written. Set a decimal value of 00 to 59 to this register in BCD code.

MIN can be set by an 8-bit memory manipulation instruction.

Reset signal generation clears this register to 00H.

Figure 9-8. Format of Minute Count Register (MIN)

Address: FFF93H After reset: 00H R/W

Symbol	7	6	5	4	3	2	1	0
MIN	0	MIN40	MIN20	MIN10	MIN8	MIN4	MIN2	MIN1

(8) Hour count register (HOUR)

The HOUR register is an 8-bit register that takes a value of 00 to 23 or 01 to 12 and 21 to 32 (decimal) and indicates the count value of hours.

It counts up when the minute counter overflows.

When data is written to this register, it is written to a buffer and then to the counter up to 2 clocks (32.768 kHz) later. Even if the minute count register overflows while this register is being written, this register ignores the overflow and is set to the value written. Set a decimal value of 00 to 23, or 01 to 12 and 21 to 32, to this register in BCD code.

HOUR can be set by an 8-bit memory manipulation instruction.

Reset signal generation clears this register to 12H.

However, the value of this register is 00H if the AMPM bit (bit 3 of the RTCC0 register) is set to 1 after reset.

Figure 9-9. Format of Hour Count Register (HOUR)

Address: FFF94H After reset: 12H R/W

Symbol	7	6	5	4	3	2	1	0
HOUR	0	0	HOUR20	HOUR10	HOUR8	HOUR4	HOUR2	HOUR1

Caution Bit 5 (HOUR20) of HOUR indicates AM(0)/PM(1) if AMPM = 0 (if the 12-hour system is selected).

Table 9-2 shows the relationship between the setting value of the AMPM bit, the HOUR register value, and time.

Table 9-2. Displayed Time Digits

24-Hour Display (AMPM bit = 1)		12-Hour Display (AMPM bit = 1)	
Time	HOUR Register	Time	HOUR Register
0	00H	0 a.m.	12H
1	01H	1 a.m.	01H
2	02H	2 a.m.	02H
3	03H	3 a.m.	03H
4	04H	4 a.m.	04H
5	05H	5 a.m.	05H
6	06H	6 a.m.	06H
7	07H	7 a.m.	07H
8	08H	8 a.m.	08H
9	09H	9 a.m.	09H
10	10H	10 a.m.	10H
11	11H	11 a.m.	11H
12	12H	0 p.m.	32H
13	13H	1 p.m.	21H
14	14H	2 p.m.	22H
15	15H	3 p.m.	23H
16	16H	4 p.m.	24H
17	17H	5 p.m.	25H
18	18H	6 p.m.	26H
19	19H	7 p.m.	27H
20	20H	8 p.m.	28H
21	21H	9 p.m.	29H
22	22H	10 p.m.	30H
23	23H	11 p.m.	31H

The HOUR register value is set to 12-hour display when the AMPM bit is “0” and to 24-hour display when the AMPM bit is “1”.

In 12-hour display, the fifth bit of the HOUR register displays 0 for AM and 1 for PM.

(9) Day count register (DAY)

The DAY register is an 8-bit register that takes a value of 1 to 31 (decimal) and indicates the count value of days.

It counts up when the hour counter overflows.

This counter counts as follows.

- 01 to 31 (January, March, May, July, August, October, December)
- 01 to 30 (April, June, September, November)
- 01 to 29 (February, leap year)
- 01 to 28 (February, normal year)

When data is written to this register, it is written to a buffer and then to the counter up to 2 clocks (32.768 kHz) later. Even if the hour count register overflows while this register is being written, this register ignores the overflow and is set to the value written. Set a decimal value of 01 to 31 to this register in BCD code.

DAY can be set by an 8-bit memory manipulation instruction.

Reset signal generation clears this register to 01H.

Figure 9-10. Format of Day Count Register (DAY)

Address: FFF96H After reset: 01H R/W

Symbol	7	6	5	4	3	2	1	0
DAY	0	0	DAY20	DAY10	DAY8	DAY4	DAY2	DAY1

(10) Week count register (WEEK)

The WEEK register is an 8-bit register that takes a value of 0 to 6 (decimal) and indicates the count value of weekdays.

It counts up in synchronization with the day counter.

When data is written to this register, it is written to a buffer and then to the counter up to 2 clocks (32.768 kHz) later. Set a decimal value of 00 to 06 to this register in BCD code.

WEEK can be set by an 8-bit memory manipulation instruction.

Reset signal generation clears this register to 00H.

Figure 9-11. Format of Week Count Register (WEEK)

Address: FFF95H After reset: 00H R/W

Symbol	7	6	5	4	3	2	1	0
WEEK	0	0	0	0	0	WEEK4	WEEK2	WEEK1

Caution Values corresponding to the month count register and day count register are not automatically stored to the week count register.
Be sure to set the week count register as follows, after reset release.

Day	WEEK
Sunday	00H
Monday	01H
Tuesday	02H
Wednesday	03H
Thursday	04H
Friday	05H
Saturday	06H

(11) Month count register (MONTH)

The MONTH register is an 8-bit register that takes a value of 1 to 12 (decimal) and indicates the count value of months.

It counts up when the day counter overflows.

When data is written to this register, it is written to a buffer and then to the counter up to 2 clocks (32.768 kHz) later. Even if the day count register overflows while this register is being written, this register ignores the overflow and is set to the value written. Set a decimal value of 01 to 12 to this register in BCD code.

MONTH can be set by an 8-bit memory manipulation instruction.

Reset signal generation clears this register to 01H.

Figure 9-12. Format of Month Count Register (MONTH)

Address: FFF97H After reset: 01H R/W

Symbol	7	6	5	4	3	2	1	0
MONTH	0	0	0	MONTH10	MONTH8	MONTH4	MONTH2	MONTH1

(12) Year count register (YEAR)

The YEAR register is an 8-bit register that takes a value of 0 to 99 (decimal) and indicates the count value of years.

It counts up when the month counter overflows.

Values 00, 04, 08, …, 92, and 96 indicate a leap year.

When data is written to this register, it is written to a buffer and then to the counter up to 2 clocks (32.768 kHz) later. Even if the month count register overflows while this register is being written, this register ignores the overflow and is set to the value written. Set a decimal value of 00 to 99 to this register in BCD code.

YEAR can be set by an 8-bit memory manipulation instruction.

Reset signal generation clears this register to 00H.

Figure 9-13. Format of Year Count Register (YEAR)

Address: FFF98H After reset: 00H R/W

Symbol	7	6	5	4	3	2	1	0
YEAR	YEAR80	YEAR40	YEAR20	YEAR10	YEAR8	YEAR4	YEAR2	YEAR1

(13) Watch error correction register (SUBCUD)

This register is used to correct the watch with high accuracy when it is slow or fast by changing the value (reference value: 7FFFH) that overflows from the sub-count register (RSUBC) to the second count register.

SUBCUD can be set by an 8-bit memory manipulation instruction.

Reset signal generation clears this register to 00H.

Figure 9-14. Format of Watch Error Correction Register (SUBCUD)

Address: FFF99H After reset: 00H R/W

Symbol	7	6	5	4	3	2	1	0
SUBCUD	DEV	F6	F5	F4	F3	F2	F1	F0

DEV	Setting of watch error correction timing
0	Corrects watch error when the second digits are at 00, 20, or 40 (every 20 seconds).
1	Corrects watch error only when the second digits are at 00 (every 60 seconds).
Writing to the SUBCUD register at the following timing is prohibited. • When DEV = 0 is set: For a period of SEC = 00H, 20H, 40H • When DEV = 1 is set: For a period of SEC = 00H	

F6	Setting of watch error correction value
0	Increases by {(F5, F4, F3, F2, F1, F0) – 1} × 2.
1	Decreases by {(/F5, /F4, /F3, /F2, /F1, /F0) + 1} × 2.
When (F6, F5, F4, F3, F2, F1, F0) = (*, 0, 0, 0, 0, 0, *), the watch error is not corrected. * is 0 or 1. /F5 to /F0 are the inverted values of the corresponding bits (000011 when 111100). Range of correction value: (when F6 = 0) 2, 4, 6, 8, … , 120, 122, 124 (when F6 = 1) –2, –4, –6, –8, … , –120, –122, –124	

The range of value that can be corrected by using the watch error correction register (SUBCUD) is shown below.

	DEV = 0 (correction every 20 seconds)	DEV = 1 (correction every 60 seconds)
Correctable range	–189.2 ppm to 189.2 ppm	–63.1 ppm to 63.1 ppm
Maximum excludes quantization error	± 1.53 ppm	± 0.51 ppm
Minimum resolution	± 3.05 ppm	± 1.02 ppm

Remark If a correctable range is −63.1 ppm or lower and 63.1 ppm or higher, set 0 to DEV.

(14) Alarm minute register (ALARMWM)

This register is used to set minutes of alarm.

ALARMWM can be set by an 8-bit memory manipulation instruction.

Reset signal generation clears this register to 00H.

Caution Set a decimal value of 00 to 59 to this register in BCD code. If a value outside the range is set, the alarm is not detected.

Figure 9-15. Format of Alarm Minute Register (ALARMWM)

Address: FFF9AH After reset: 00H R/W

Symbol	7	6	5	4	3	2	1	0
ALARMWM	0	WM40	WM20	WM10	WM8	WM4	WM2	WM1

(15) Alarm hour register (ALARMWH)

This register is used to set hours of alarm.

ALARMWH can be set by an 8-bit memory manipulation instruction.

Reset signal generation clears this register to 12H.

However, the value of this register is 00H if the AMPM bit (bit 3 of the RTCC0 register) is set to 1 after reset.

Caution Set a decimal value of 00 to 23, 01 to 12, or 21 to 32 to this register in BCD code. If a value outside the range is set, the alarm is not detected.

Figure 9-16. Format of Alarm Hour Register (ALARMWH)

Address: FFF9BH After reset: 12H R/W

Symbol	7	6	5	4	3	2	1	0
ALARMWH	0	0	WH20	WH10	WH8	WH4	WH2	WH1

Caution Bit 5 (WH20) of ALARMWH indicates AM(0)/PM(1) if AMPM = 0 (if the 12-hour system is selected).

(16) Alarm week register (ALARMWW)

This register is used to set date of alarm.

ALARMWW can be set by an 8-bit memory manipulation instruction.

Reset signal generation clears this register to 00H.

Figure 9-17. Format of Alarm Week Register (ALARMWW)

Address: FFF9CH After reset: 00H R/W

Symbol	7	6	5	4	3	2	1	0
ALARMWW	0	WW6	WW5	WW4	WW3	WW2	WW1	WW0

Here is an example of setting the alarm.

Time of Alarm	Day							12-Hour Display				24-Hour Display			
	Sunday WW0	Monday WW1	Tuesday WW2	Wednesday WW3	Thursday WW4	Friday WW5	Saturday WW6	Hour 10	Hour 1	Minute 10	Minute 1	Hour 10	Hour 1	Minute 10	Minute 1
Every day, 0:00 a.m.	1	1	1	1	1	1	1	1	2	0	0	0	0	0	0
Every day, 1:30 a.m.	1	1	1	1	1	1	1	0	1	3	0	0	1	3	0
Every day, 11:59 a.m.	1	1	1	1	1	1	1	1	1	5	9	1	1	5	9
Monday through Friday, 0:00 p.m.	0	1	1	1	1	1	0	3	2	0	0	1	2	0	0
Sunday, 1:30 p.m.	1	0	0	0	0	0	0	2	1	3	0	1	3	3	0
Monday, Wednesday, Friday, 11:59 p.m.	0	1	0	1	0	1	0	3	1	5	9	2	3	5	9

9.4 Real-Time Counter Operation

9.4.1 Starting operation of real-time counter

Figure 9-18. Procedure for Starting Operation of Real-Time Counter

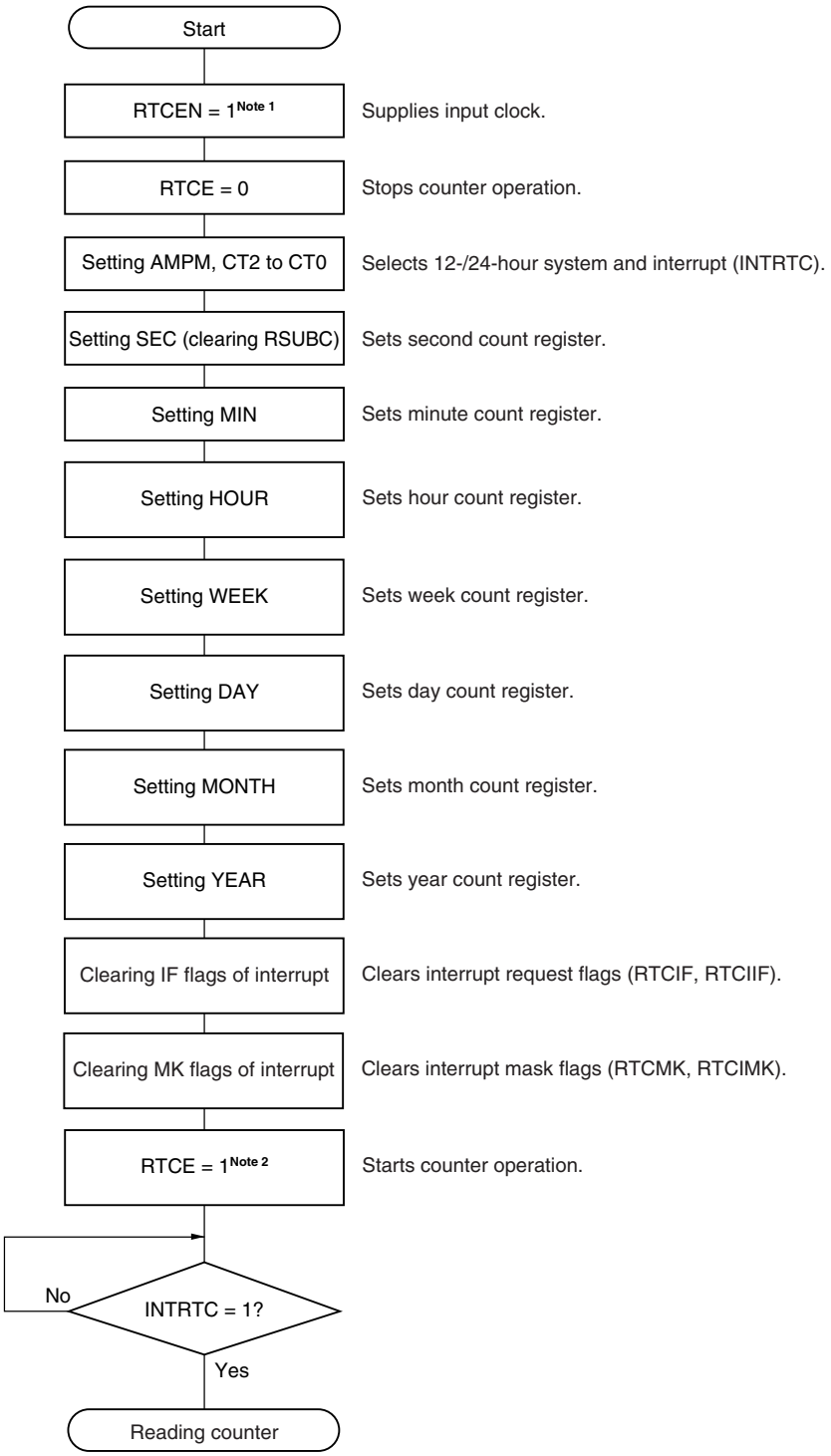

Notes 1. First set RTCEN to 1, while oscillation of the subsystem clock (f_{SUB}) is stable.

2. Confirm the procedure described in **9.4.2 Shifting to STOP mode after starting operation** when shifting to STOP mode without waiting for INTRTC = 1 after RTCE = 1.

9.4.2 Shifting to STOP mode after starting operation

Perform one of the following processing when shifting to STOP mode immediately after setting RTCE to 1.

However, after setting RTCE to 1, this processing is not required when shifting to STOP mode after the first INTRTC interrupt has occurred.

- Shifting to STOP mode when at least two subsystem clocks (f_{SUB}) (about 62 μs) have elapsed after setting RTCE to 1 (see **Figure 9-19**, **Example 1**).
- Checking by polling RWST to become 1, after setting RTCE to 1 and then setting RWAIT to 1. Afterward, setting RWAIT to 0 and shifting to STOP mode after checking again by polling that RWST has become 0 (see **Figure 9-19**, **Example 2**).

Figure 9-19. Procedure for Shifting to STOP Mode After Setting RTCE to 1

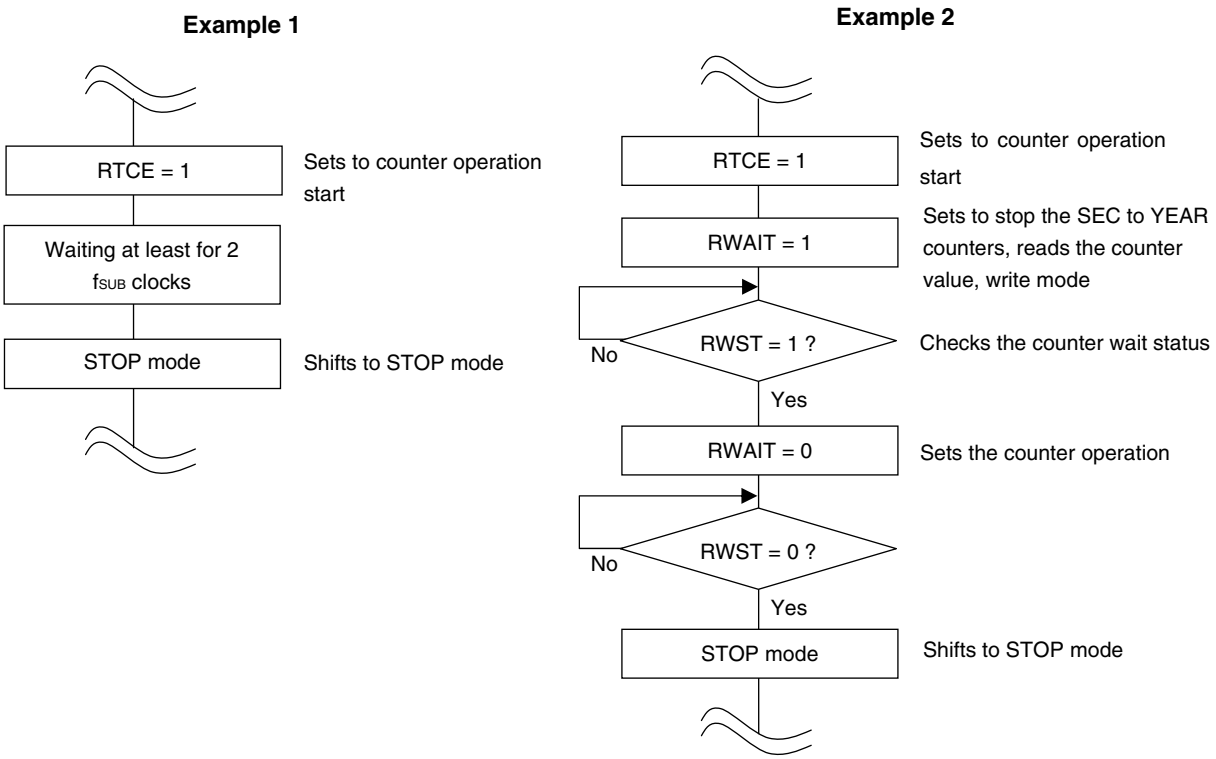

9.4.3 Reading/writing real-time counter

Read or write the counter after setting 1 to RWAIT first.

Figure 9-20. Procedure for Reading Real-Time Counter

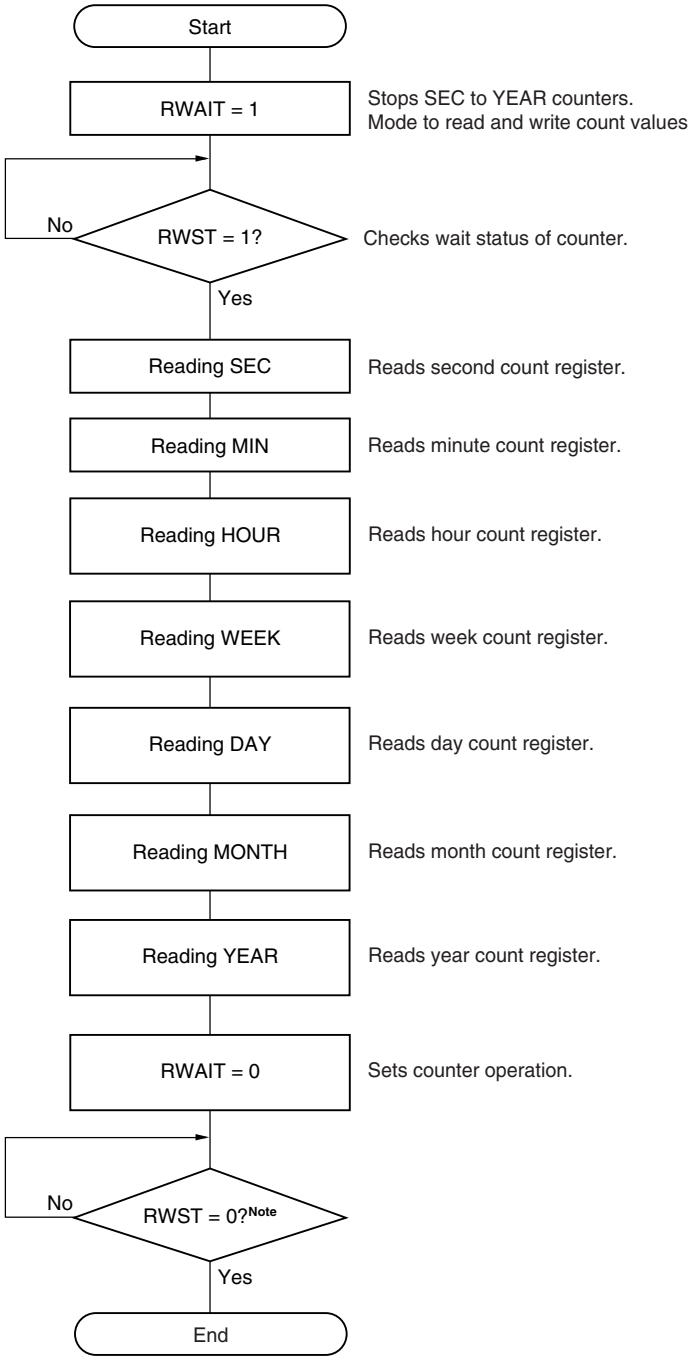

Note Be sure to confirm that RWST = 0 before setting STOP mode.

Caution Complete the series of operations of setting RWAIT to 1 to clearing RWAIT to 0 within 1 second.

Remark SEC, MIN, HOUR, WEEK, DAY, MONTH, and YEAR may be read in any sequence.
All the registers do not have to be set and only some registers may be read.

Figure 9-21. Procedure for Writing Real-Time Counter

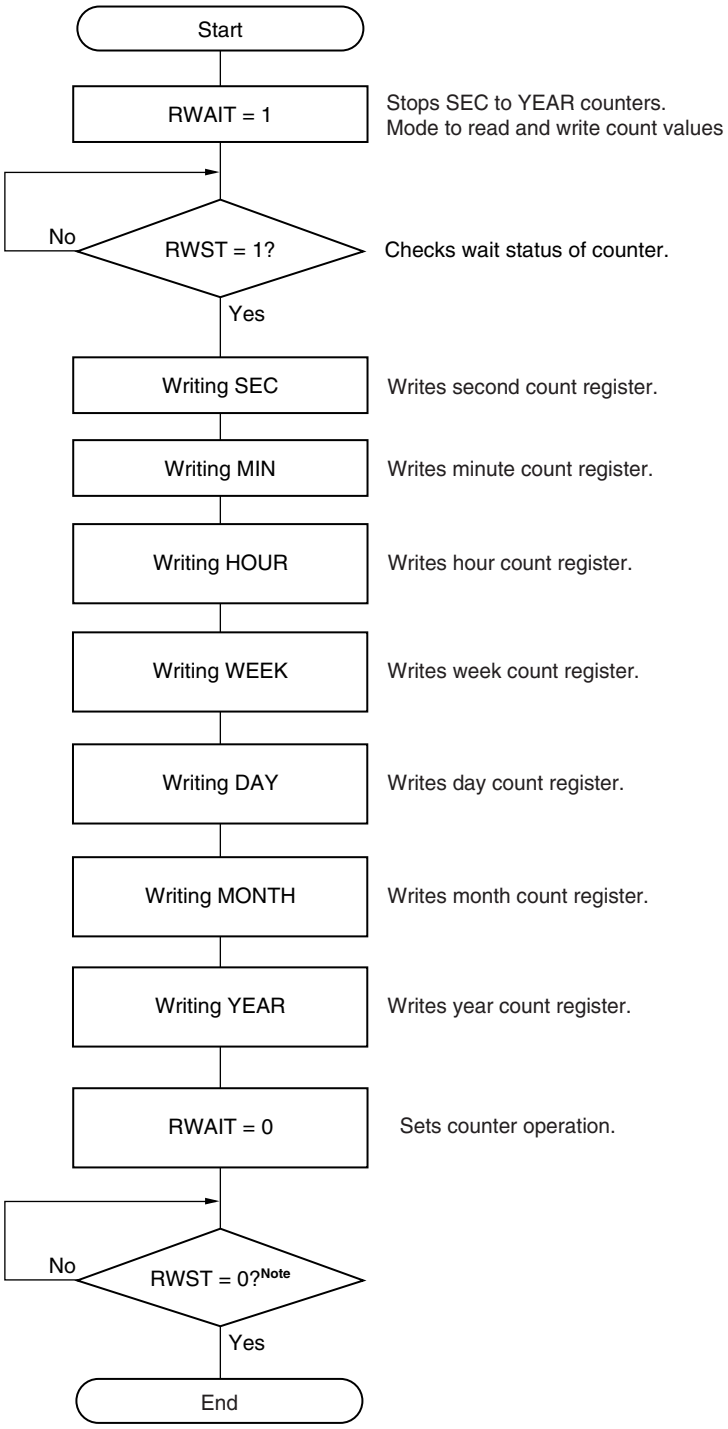

Note Be sure to confirm that RWST = 0 before setting STOP mode.

Caution Complete the series of operations of setting RWAIT to 1 to clearing RWAIT to 0 within 1 second.

Remark SEC, MIN, HOUR, WEEK, DAY, MONTH, and YEAR may be written in any sequence.
All the registers do not have to be set and only some registers may be written.

9.4.4 Setting alarm of real-time counter

Set time of alarm after setting 0 to WALE first.

Figure 9-22. Alarm Setting Procedure

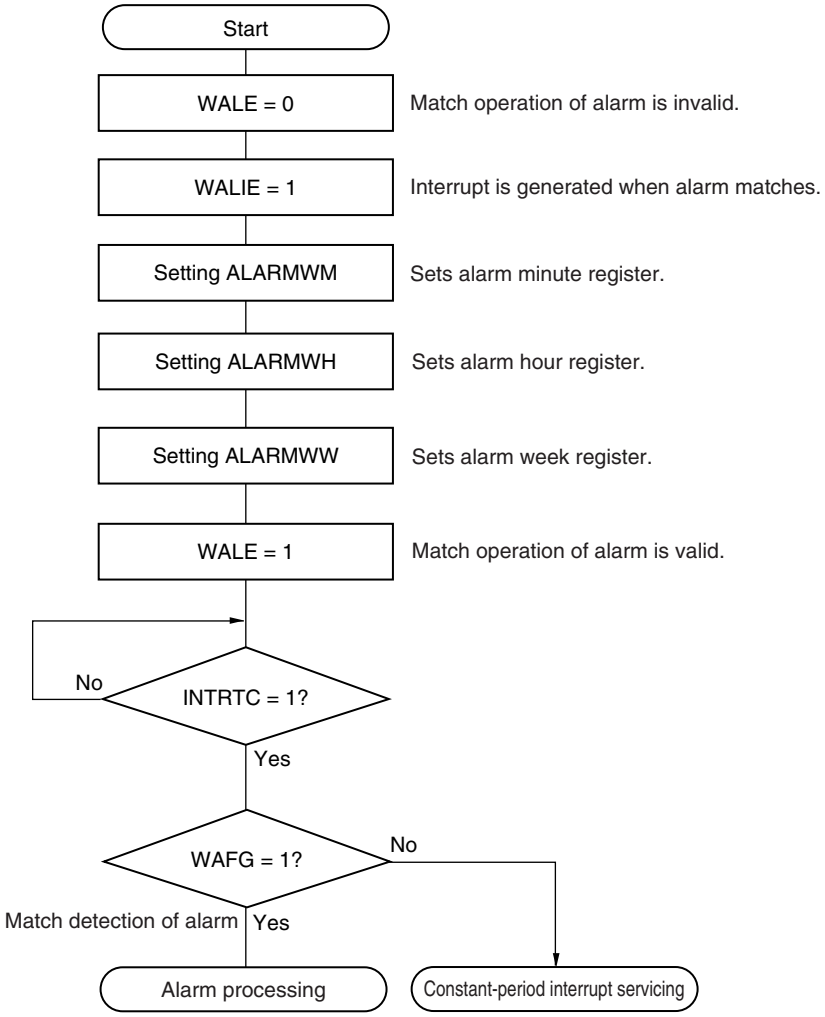

Remarks 1. ALARMWM, ALARMWH, and ALARMWW may be written in any sequence.

2. Fixed-cycle interrupts and alarm match interrupts use the same interrupt source (INTRTC). When using these two types of interrupts at the same time, which interrupt occurred can be judged by checking the fixed-cycle interrupt status flag (RIFG) and the alarm detection status flag (WAFG) upon INTRTC occurrence.

CHAPTER 10 WATCHDOG TIMER

10.1 Functions of Watchdog Timer

The watchdog timer operates on the internal low-speed oscillation clock.

The watchdog timer is used to detect an inadvertent program loop. If a program loop is detected, an internal reset signal is generated.

Program loop is detected in the following cases.

- If the watchdog timer counter overflows
- If a 1-bit manipulation instruction is executed on the watchdog timer enable register (WDTE)
- If data other than “ACH” is written to WDTE
- If data is written to WDTE during a window close period

When a reset occurs due to the watchdog timer, bit 4 (WDRF) of the reset control flag register (RESF) is set to 1. For details of RESF, see **CHAPTER 19 RESET FUNCTION**.

When 75% of the overflow time is reached, an interval interrupt can be generated.

10.2 Configuration of Watchdog Timer

The watchdog timer includes the following hardware.

Table 10-1. Configuration of Watchdog Timer

Item	Configuration
Control register	Watchdog timer enable register (WDTE)

How the counter operation is controlled, overflow time, window open period, and interval interrupt are set by the option byte.

Table 10-2. Setting of Option Bytes and Watchdog Timer

Setting of Watchdog Timer	Option Byte (000C0H)
Watchdog timer interval interrupt	Bit 7 (WDTINT)
Window open period	Bits 6 and 5 (WINDOW1, WINDOW0)
Controlling counter operation of watchdog timer	Bit 4 (WDTON)
Overflow time of watchdog timer	Bits 3 to 1 (WDCS2 to WDCS0)
Controlling counter operation of watchdog timer (in HALT/STOP mode)	Bit 0 (WDSTBYON)

Remark For the option byte, see **CHAPTER 23 OPTION BYTE**.

Figure 10-1. Block Diagram of Watchdog Timer

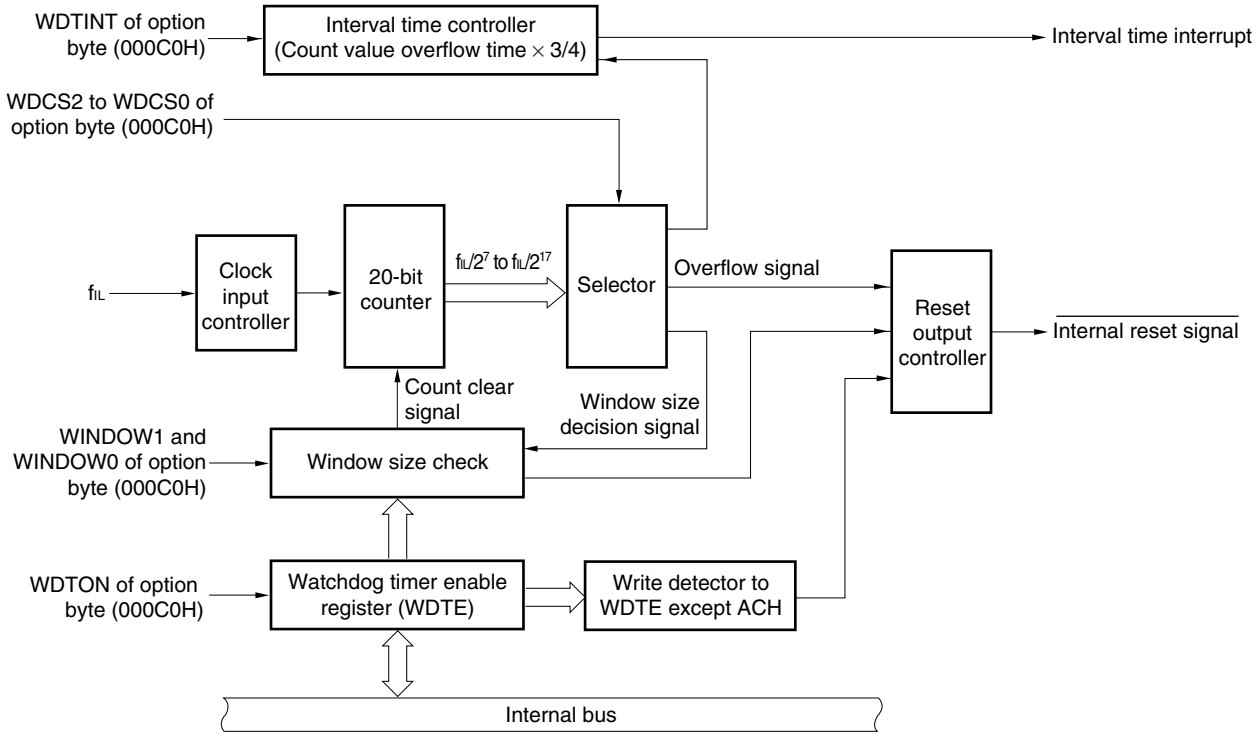

Remark f_{IL}: Internal low-speed oscillation clock frequency

10.3 Register Controlling Watchdog Timer

The watchdog timer is controlled by the watchdog timer enable register (WDTE).

(1) Watchdog timer enable register (WDTE)

Writing “ACH” to WDTE clears the watchdog timer counter and starts counting again.
This register can be set by an 8-bit memory manipulation instruction.
Reset signal generation sets this register to 9AH or 1AH[Note].

Figure 10-2. Format of Watchdog Timer Enable Register (WDTE)

Address: FFFABH After reset: 9AH/1AH[Note] R/W

Symbol	7	6	5	4	3	2	1	0
WDTE								

Note The WDTE reset value differs depending on the WDTON setting value of the option byte (000C0H). To operate watchdog timer, set WDTON to 1.

WDTON Setting Value	WDTE Reset Value
0 (watchdog timer count operation disabled)	1AH
1 (watchdog timer count operation enabled)	9AH

Cautions 1. If a value other than “ACH” is written to WDTE, an internal reset signal is generated.
2. If a 1-bit memory manipulation instruction is executed for WDTE, an internal reset signal is generated.
3. The value read from WDTE is 9AH/1AH (this differs from the written value (ACH)).

10.4 Operation of Watchdog Timer

10.4.1 Controlling operation of watchdog timer

1. When the watchdog timer is used, its operation is specified by the option byte (000C0H).

   - Enable counting operation of the watchdog timer by setting bit 4 (WDTON) of the option byte (000C0H) to 1 (the counter starts operating after a reset release) (for details, see **CHAPTER 23**).

WDTON	Watchdog Timer Counter
0	Counter operation disabled (counting stopped after reset)
1	Counter operation enabled (counting started after reset)

   - Set an overflow time by using bits 3 to 1 (WDCS2 to WDCS0) of the option byte (000C0H) (for details, see **10.4.2** and **CHAPTER 23**).
   - Set a window open period by using bits 6 and 5 (WINDOW1 and WINDOW0) of the option byte (000C0H) (for details, see **10.4.3** and **CHAPTER 23**).

2. After a reset release, the watchdog timer starts counting.
3. By writing “ACH” to WDTE after the watchdog timer starts counting and before the overflow time set by the option byte, the watchdog timer is cleared and starts counting again.
4. After that, write WDTE the second time or later after a reset release during the window open period. If WDTE is written during a window close period, an internal reset signal is generated.
5. If the overflow time expires without “ACH” written to WDTE, an internal reset signal is generated.
   A internal reset signal is generated in the following cases.

   - If a 1-bit manipulation instruction is executed on the watchdog timer enable register (WDTE)
   - If data other than “ACH” is written to WDTE

Cautions 1. When data is written to WDTE for the first time after reset release, the watchdog timer is cleared in any timing regardless of the window open time, as long as the register is written before the overflow time, and the watchdog timer starts counting again.

2. If the watchdog timer is cleared by writing “ACH” to WDTE, the actual overflow time may be different from the overflow time set by the option byte by up to $2/f_{IL}$ seconds.

3. The watchdog timer can be cleared immediately before the count value overflows.

<Example> When the overflow time is set to $2^{10}/f_{IL}$, writing “ACH” is valid up to count value 3FH.

Cautions 4. The operation of the watchdog timer in the HALT and STOP modes differs as follows depending on the set value of bit 0 (WDSTBYON) of the option byte (000C0H).

	WDSTBYON = 0	WDSTBYON = 1
In HALT mode	Watchdog timer operation stops.	Watchdog timer operation continues.
In STOP mode		

If WDSTBYON = 0, the watchdog timer resumes counting after the HALT or STOP mode is released. At this time, the counter is cleared to 0 and counting starts.
When operating with the X1 oscillation clock after releasing the STOP mode, the CPU starts operating after the oscillation stabilization time has elapsed.
Therefore, if the period between the STOP mode release and the watchdog timer overflow is short, an overflow occurs during the oscillation stabilization time, causing a reset.
Consequently, set the overflow time in consideration of the oscillation stabilization time when operating with the X1 oscillation clock and when the watchdog timer is to be cleared after the STOP mode release by an interval interrupt.

5. The watchdog timer continues its operation during self-programming of the flash memory and EEPROM™ emulation. During processing, the interrupt acknowledge time is delayed. Set the overflow time and window size taking this delay into consideration.

10.4.2 Setting overflow time of watchdog timer

Set the overflow time of the watchdog timer by using bits 3 to 1 (WDCS2 to WDCS0) of the option byte (000C0H).

If an overflow occurs, an internal reset signal is generated. The present count is cleared and the watchdog timer starts counting again by writing “ACH” to WDTE during the window open period before the overflow time.

The following overflow time is set.

Table 10-3. Setting of Overflow Time of Watchdog Timer

WDCS2	WDCS1	WDCS0	Overflow Time of Watchdog Timer (f_{IL} = 33 kHz (MAX.))
0	0	0	$2^7/f_{IL}$ (3.88 ms)
0	0	1	$2^8/f_{IL}$ (7.76 ms)
0	1	0	$2^9/f_{IL}$ (15.52 ms)
0	1	1	$2^{10}/f_{IL}$ (31.03 ms)
1	0	0	$2^{12}/f_{IL}$ (124.12 ms)
1	0	1	$2^{14}/f_{IL}$ (496.48 ms)
1	1	0	$2^{15}/f_{IL}$ (992.97 ms)
1	1	1	$2^{17}/f_{IL}$ (3971.88 ms)

Caution The watchdog timer continues its operation during self-programming of the flash memory and EEPROM emulation. During processing, the interrupt acknowledge time is delayed. Set the overflow time and window size taking this delay into consideration.

Remark f_{IL}: Internal low-speed oscillation clock frequency

10.4.3 Setting window open period of watchdog timer

Set the window open period of the watchdog timer by using bits 6 and 5 (WINDOW1, WINDOW0) of the option byte (000C0H). The outline of the window is as follows.

- If “ACH” is written to WDTE during the window open period, the watchdog timer is cleared and starts counting again.
- Even if “ACH” is written to WDTE during the window close period, an abnormality is detected and an internal reset signal is generated.

Example: If the window open period is 25%

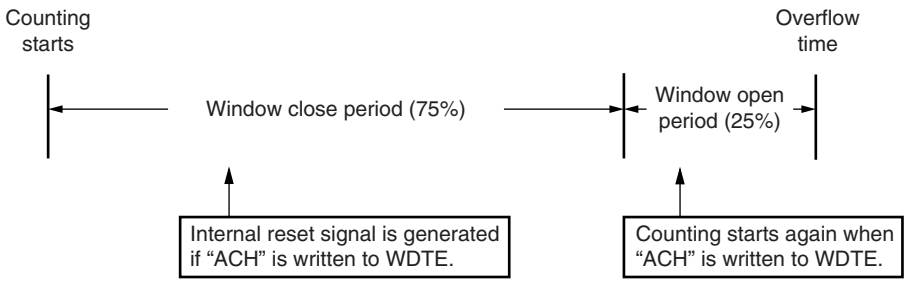

Caution When data is written to WDTE for the first time after reset release, the watchdog timer is cleared in any timing regardless of the window open time, as long as the register is written before the overflow time, and the watchdog timer starts counting again.

The window open period to be set is as follows.

Table 10-4. Setting Window Open Period of Watchdog Timer

WINDOW1	WINDOW0	Window Open Period of Watchdog Timer
0	0	25%
0	1	50%
1	0	75%
1	1	100%

Cautions 1. The watchdog timer continues its operation during self-programming of the flash memory and EEPROM emulation. During processing, the interrupt acknowledge time is delayed. Set the overflow time and window size taking this delay into consideration.

2. When bit 0 (WDSTBYON) of the option byte (000C0H) = 0, the window open period is 100% regardless of the values of WINDOW1 and WINDOW0.

3. Do not set the window open period to 25% if the watchdog timer corresponds to either of the conditions below.

- **When stopping all main system clocks (internal high-speed oscillation clock, X1 clock, and external main system clock) by use of the STOP mode or software.**
- **Low consumption current mode**

Remarks 1. If the overflow time is set to $2^{10}/f_{IL}$, the window close time and open time are as follows.

	Setting of Window Open Period			
	25%	50%	75%	100%
Window close time	0 to 28.44 ms	0 to 18.96 ms	0 to 9.48 ms	None
Window open time	28.44 to 31.03 ms	18.96 to 31.03 ms	9.48 to 31.03 ms	0 to 31.03 ms

<When window open period is 25%>

- Overflow time:
  $2^{10}/f_{IL}$ (MAX.) = 2^{10}/33 kHz (MAX.) = 31.03 ms
- Window close time:
  0 to $2^{10}/f_{IL}$ (MIN.) × (1 − 0.25) = 0 to 2^{10}/27 kHz (MIN.) × 0.75 = 0 to 28.44 ms
- Window open time:
  $2^{10}/f_{IL}$ (MIN.) × (1 − 0.25) to $2^{10}/f_{IL}$ (MAX.) = 2^{10}/27 kHz (MIN.) × 0.75 to 2^{10}/33 kHz (MAX.) = 28.44 to 31.03 ms

2. f_{IL}: Internal low-speed oscillation clock frequency

10.4.4 Setting watchdog timer interval interrupt

Depending on the setting of bit 7 (WDTINT) of an option byte (000C0H), an interval interrupt (INTWDTI) can be generated when 75% of the overflow time is reached.

Table 10-5. Setting of Watchdog Timer Interval Interrupt

WDTINT	Use of Watchdog Timer Interval Interrupt
0	Interval interrupt is used.
1	Interval interrupt is generated when 75% of overflow time is reached.

Caution When operating with the X1 oscillation clock after releasing the STOP mode, the CPU starts operating after the oscillation stabilization time has elapsed.
Therefore, if the period between the STOP mode release and the watchdog timer overflow is short, an overflow occurs during the oscillation stabilization time, causing a reset.
Consequently, set the overflow time in consideration of the oscillation stabilization time when operating with the X1 oscillation clock and when the watchdog timer is to be cleared after the STOP mode release by an interval interrupt.

Remark The watchdog timer continues counting even after INTWDTI is generated (until ACH is written to the WDTE register). If ACH is not written to the WDTE register before the overflow time, an internal reset signal is generated.

CHAPTER 11 CLOCK OUTPUT/BUZZER OUTPUT CONTROLLER

The number of output pins of the clock output and buzzer output controllers differs, depending on the product. Furthermore, the 78K0R/IB3, the 38-pin and 44-pin products of the 78K0R/IC3 does not has a clock output and buzzer output controllers.

Output pin	78K0R/IB3	78K0R/IC3 (38-pin)	78K0R/IC3 (44-pin)	78K0R/IC3 (48-pin)	78K0R/ID3	78K0R/IE3
PCLBUZ0	–	–	–	√	√	√
PCLBUZ1	–	–	–	–	–	√

11.1 Functions of Clock Output/Buzzer Output Controller

The clock output controller is intended for carrier output during remote controlled transmission and clock output for supply to peripheral ICs.

Buzzer output is a function to output a square wave of buzzer frequency.

One pin can be used to output a clock or buzzer sound.

PCLBUZn outputs a clock selected by clock output select register n (CKSn).

Figure 11-1 shows the block diagram of clock output/buzzer output controller.

Remark 48-pin products of 78K0R/IC3, 78K0R/ID3 : n = 0
78K0R/IE3 : n = 0, 1

Figure 11-1. Block Diagram of Clock Output/Buzzer Output Controller

•48-pin products of 78K0R/IC3, 78K0R/ID3

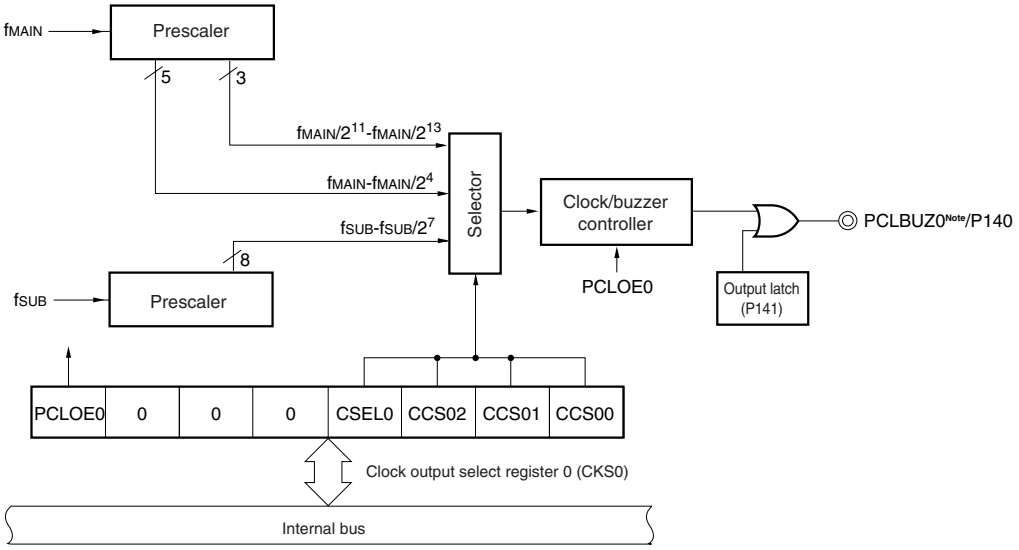

•78K0R/IE3

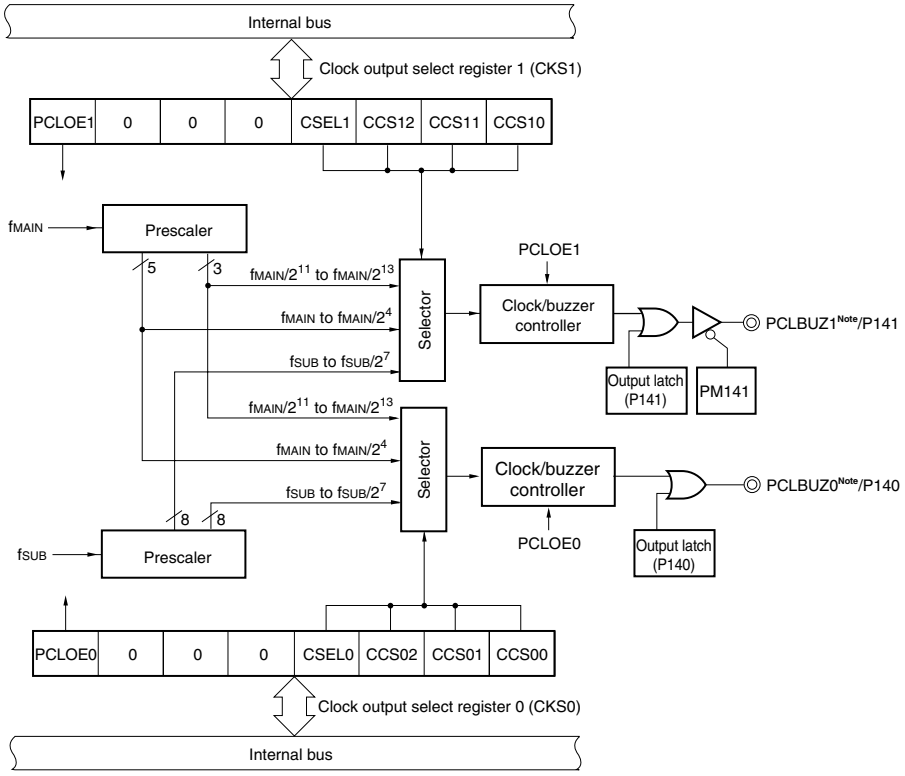

Note The PCLBUZ0 and PCLBUZ1 pins can output a clock of up to 10 MHz at 2.7 V ≤ V_{DD}.

Remark f_{MAIN}: Main system clock frequency

f_{SUB}: Subsystem clock frequency

11.2 Configuration of Clock Output/Buzzer Output Controller

The clock output/buzzer output controller includes the following hardware.

Table 11-1. Configuration of Clock Output/Buzzer Output Controller

Item	Configuration
Control registers	Clock output select registers n (CKSn) Port mode register 14 (PM14) (78K0R/IE3 only) Port register 14 (P14)

Remarks 1. 48-pin products of 78K0R/IC3, 78K0R/ID3: n = 0

2. 78K0R/IE3 : n = 0, 1

11.3 Registers Controlling Clock Output/Buzzer Output Controller

The following two registers are used to control the clock output/buzzer output controller.

- Clock output select registers n (CKSn)
- Port mode register 14 (PM14) (78K0R/IE3 only)

(1) Clock output select registers n (CKSn)

These registers set output enable/disable for clock output or for the buzzer frequency output pin (PCLBUZn), and set the output clock.

CKSn register set by a 1-bit or 8-bit memory manipulation instruction.

Reset signal generation clears these registers to 00H.

Remark 48-pin products of 78K0R/IC3, 78K0R/ID3: n = 0

78K0R/IE3 : n = 0, 1

Figure 11-2. Format of Clock Output Select Register n (CKSn)

Address: FFFA5H (CKS0), FFFA6H (CKS1) After reset: 00H R/W

Symbol	<7>	6	5	4	3	2	1	0
CKSn	PCLOEn	0	0	0	CSELn	CCSn2	CCSn1	CCSn0

PCLOEn	PCLBUZn output enable/disable specification
0	Output disable (default)
1	Output enable

CSELn	CCSn2	CCSn1	CCSn0	PCLBUZn output clock selection			
					f_{MAIN} = 10 MHz	f_{MAIN} = 20 MHz	f_{MAIN} = 40 MHz
0	0	0	0	f_{MAIN}	10 MHz	Setting prohibited[Note]	Setting prohibited[Note]
0	0	0	1	$f_{MAIN}/2$	5 MHz	10 MHz	Setting prohibited[Note]
0	0	1	0	$f_{MAIN}/2^2$	2.5 MHz	5 MHz	10 MHz
0	0	1	1	$f_{MAIN}/2^3$	1.25 MHz	2.5 MHz	5 MHz
0	1	0	0	$f_{MAIN}/2^4$	625 kHz	1.25 MHz	2.5 MHz
0	1	0	1	$f_{MAIN}/2^{11}$	4.88 kHz	9.77 kHz	19.5 MHz
0	1	1	0	$f_{MAIN}/2^{12}$	2.44 kHz	4.88 kHz	9.77 kHz
0	1	1	1	$f_{MAIN}/2^{13}$	1.22 kHz	2.44 kHz	4.88 kHz
1	0	0	0	f_{SUB}	32.768 kHz		
1	0	0	1	$f_{SUB}/2$	16.384 kHz		
1	0	1	0	$f_{SUB}/2^2$	8.192 kHz		
1	0	1	1	$f_{SUB}/2^3$	4.096 kHz		
1	1	0	0	$f_{SUB}/2^4$	2.048 kHz		
1	1	0	1	$f_{SUB}/2^5$	1.024 kHz		
1	1	1	0	$f_{SUB}/2^6$	512 Hz		
1	1	1	1	$f_{SUB}/2^7$	256 Hz		

Note Setting an output clock exceeding 10 MHz is prohibited when 2.7 V ≤ V_{DD}.

Cautions 1. Change the output clock after disabling clock output (PCLOEn = 0).

2. To shift to STOP mode when the main system clock is selected (CSELn = 0), set PCLOEn = 0 before executing the STOP instruction. When the subsystem clock is selected (CSELn = 1), PCLOEn = 1 can be set because the clock can be output in STOP mode.

Remarks 1. 48-pin products of 78K0R/IC3, 78K0R/ID3: n = 0
78K0R/IE3 : n = 0, 1

2. f_{MAIN}: Main system clock frequency

3. f_{SUB}: Subsystem clock frequency

(2) Port mode register 14 (PM14) (78K0R/IE3 only)

This register sets port 14 input/output in 1-bit units.

When using the P140/PCLBUZ0 and P141/PCLBUZ1 pins for clock output/buzzer output, clear PM141 and the output latches of P140 and P141 to 0.

PM14 is set by a 1-bit or 8-bit memory manipulation instruction.

Reset signal generation sets this register to FEH.

Figure 11-3. Format of Port Mode Register 14 (PM14)

Address: FFF2EH After reset: FEH R/W

Symbol	7	6	5	4	3	2	1	0
PM14	1	1	1	1	1	1	PM141	0

PM141	P141 pin I/O mode selection
0	Output mode (output buffer on)
1	Input mode (output buffer off)

11.4 Operations of Clock Output/Buzzer Output Controller

One pin can be used to output a clock or buzzer sound.

PCLBUZ0 outputs a clock/buzzer selected by clock output select register 0 (CKS0).

PCLBUZ1 outputs a clock/buzzer selected by clock output select register 1 (CKS1).

11.4.1 Operation as output pin

PCLBUZn is output as the following procedure.

<1> Select the output frequency with bits 0 to 3 (CCSn0 to CCSn2, CSELn) of the clock output select register (CKSn) of the PCLBUZn pin (output in disabled status).

<2> Set bit 7 (PCLOEn) of CKSn to 1 to enable clock/buzzer output.

Remarks 1. The controller used for outputting the clock starts or stops outputting the clock one clock after enabling or disabling clock output (PCLOEn) is switched. At this time, pulses with a narrow width are not output. Figure 11-4 shows enabling or stopping output using PCLOEn and the timing of outputting the clock.

2. 48-pin products of 78K0R/IC3, 78K0R/ID3: n = 0
   78K0R/IE3 : n = 0, 1

Figure 11-4. Remote Control Output Application Example

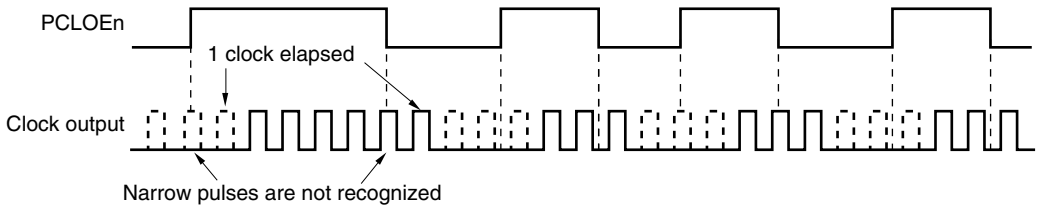

CHAPTER 12 A/D CONVERTER

The number of output pins of the A/D converter differs, depending on the product.

	78K0R/IB3	78K0R/IC3 (38-pin)	78K0R/IC3 (44-pin)	78K0R/IC3 (48-pin)	78K0R/ID3	78K0R/IE3
Analog input channel	6ch (ANI0 to ANI5)	8ch (ANI0 to ANI7)	10ch (ANI0 to ANI9)	11ch (ANI0 to ANI10)	11ch (ANI0 to ANI10)	12ch (ANI0 to ANI11)

12.1 Function of A/D Converter

The A/D converter is a 10-bit resolution converter that converts analog input signals into digital values, and is configured to control a total of thirteen channels of analog inputs, including up to twelve channels of A/D converter analog inputs (ANI0 to ANI11 [Note]) and an internal programmable gain amplifier output (PGAI).

The A/D converter has the following function.

- **10-bit resolution A/D conversion**

  10-bit resolution A/D conversion is carried out repeatedly for one analog input channel selected from ANI0 to ANI11 [Note]. Each time an A/D conversion operation ends, an interrupt request (INTAD) is generated.

Note ANI0 to ANI5 : 78K0R/IB3
ANI0 to ANI7 : 38-pin products of 78K0R/IC3
ANI0 to ANI9 : 44-pin products of 78K0R.IC3
ANI0 to ANI10 : 48-pin products of 78K0R/IC3 and 78K0R/ID3
ANI0 to ANI11 : 78K0R/IE3

Figure 12-1. Block Diagram of A/D Converter

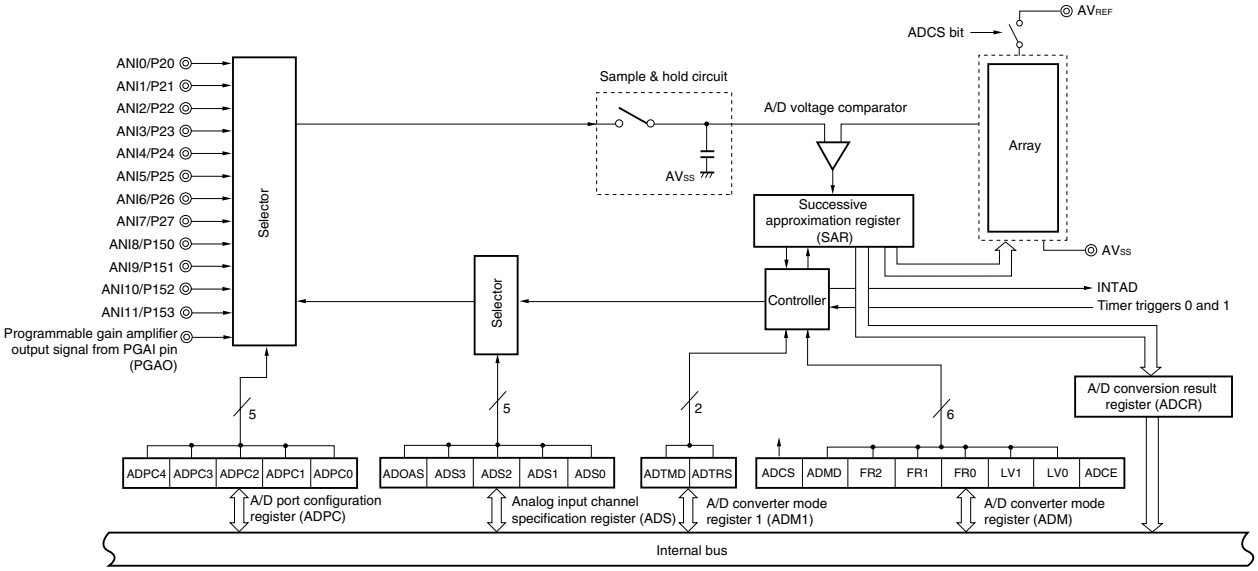

Remark ANI0 to ANI5 : 78K0R/IB3
ANI0 to ANI7 : 38-pin products of 78K0R/IC3
ANI0 to ANI9 : 44-pin products of 78K0R/IC3
ANI0 to ANI10 : 48-pin products of 78K0R/IC3 and 78K0R/ID3
ANI0 to ANI11 : 78K0R/IE3

12.2 Configuration of A/D Converter

The A/D converter includes the following hardware.

(1) ANI0 to ANI11 pins

These are the analog input pins of the twelve channels of the A/D converter. They input analog signals to be converted into digital signals. Pins other than the one selected as the analog input pin can be used as I/O port pins.

Remark ANI0 to ANI5 : 78K0R/IB3
ANI0 to ANI7 : 38-pin products of 78K0R/IC3
ANI0 to ANI9 : 44-pin products of 78K0R/IC3
ANI0 to ANI10 : 48-pin products of 78K0R/IC3 and 78K0R/ID3
ANI0 to ANI11 : 78K0R/IE3

(2) PGAO

This is the programmable gain amplifier output signal from PGAI pin. The A/D converter can perform A/D conversion by selecting the output signal of the programmable gain amplifier as the analog input.

(3) Sample & hold circuit

The sample & hold circuit samples each of the analog input voltages sequentially sent from the input circuit, and sends them to the A/D voltage comparator. This circuit also holds the sampled analog input voltage during A/D conversion.

(4) A/D voltage comparator

This A/D voltage comparator compares the voltage generated from the voltage tap of the array with the analog input voltage. If the analog input voltage is found to be greater than the reference voltage (1/2 AV_{REF}) as a result of the comparison, the most significant bit (MSB) of the successive approximation register (SAR) is set. If the analog input voltage is less than the reference voltage (1/2 AV_{REF}), the MSB of the SAR is reset.
After that, bit 10 of the SAR register is automatically set, and the next comparison is made. The voltage tap of the array is selected by the value of bit 11, to which the result has been already set.

Bit 11 = 0: (1/4 AV_{REF})
Bit 11 = 1: (3/4 AV_{REF})

The voltage tap of the array and the analog input voltage are compared and bit 10 of the SAR register is manipulated according to the result of the comparison.

Analog input voltage ≥ Voltage tap of array: Bit 10 = 1
Analog input voltage ≤ Voltage tap of array: Bit 10 = 0

Comparison is continued like this to bit 0 of the SAR register.

(5) Array

The array generates the comparison voltage input from an analog input pin.

(6) Successive approximation register (SAR)

The SAR register is a 12-bit register that sets voltage tap data whose values from the array match the voltage values of the analog input pins, 1 bit at a time starting from the most significant bit (MSB).

If data is set in the SAR register all the way to the least significant bit (LSB) (end of A/D conversion), the contents of the SAR register (conversion results) are held in the A/D conversion result register (ADCR). When all the specified A/D conversion operations have ended, an A/D conversion end interrupt request signal (INTAD) is generated.

(7) 10-bit A/D conversion result register (ADCR)

The A/D conversion result is loaded from the successive approximation register to this register each time A/D conversion is completed, and the ADCR register holds the A/D conversion result in its higher 10 bits (the lower 6 bits are fixed to 0).

(8) 8-bit A/D conversion result register (ADCRH)

The A/D conversion result is loaded from the successive approximation register to this register each time A/D conversion is completed, and the ADCRH register stores the higher 8 bits of the A/D conversion result.

(9) Controller

This circuit controls the conversion time of an input analog signal that is to be converted into a digital signal, as well as starting and stopping of the conversion operation. When A/D conversion has been completed, this controller generates INTAD.

(10) AV_{REF} pin

This pin inputs the reference voltage of the A/D converter, the programmable gain amplifier, the power supply pins and A/D converter of the comparator, and the comparator. When all pins of ports 2, 8, and 15 are used as the analog port pins, make the potential of AV_{REF} be such that $2.7\ V \leq AV_{REF} \leq V_{DD}$. When one or more of the pins of ports 2, 8, and 15 are used as the digital port pins, make AV_{REF} the same potential as V_{DD}.

The analog signal input to ANI0 to ANI11 is converted into a digital signal, based on the voltage applied across AV_{REF} and AV_{SS}.

(11) AV_{SS} pin

This is the ground potential pin of the A/D converter. Always use this pin at the same potential as that of the V_{SS} pin even when the A/D converter is not used.

Remark ANI0 to ANI5 : 78K0R/IB3
ANI0 to ANI7 : 38-pin products of 78K0R/IC3
ANI0 to ANI9 : 44-pin products of 78K0R/IC3
ANI0 to ANI10 : 48-pin products of 78K0R/IC3 and 78K0R/ID3
ANI0 to ANI11 : 78K0R/IE3

12.3 Registers Used in A/D Converter

The A/D converter uses the following eight registers.

- Peripheral enable register 0 (PER0)
- A/D converter mode register (ADM)
- A/D converter mode register 1 (ADM1)
- A/D port configuration register (ADPC)
- Analog input channel specification register (ADS)
- Port mode registers 2, 8, 15 (PM2, PM8, PM15)
- 10-bit A/D conversion result register (ADCR)
- 8-bit A/D conversion result register (ADCRH)

(1) Peripheral enable register 0 (PER0)

PER0 is used to enable or disable supplying the clock to the peripheral hardware macro. Clock supply to a hardware macro that is not used is stopped in order to reduce the power consumption and noise.

When the A/D converter is used, be sure to set bit 5 (ADCEN) of this register to 1.

PER0 can be set by a 1-bit or 8-bit memory manipulation instruction.

Reset signal generation clears this register to 00H.

Figure 12-2. Format of Peripheral Enable Register 0 (PER0)

Address: F00F0H After reset: 00H R/W

Symbol	<7>	6	<5>	<4>	3	<2>	1	0
PER0	RTCEN Note 1	0	ADCEN	IICAEN Note 2	0	SAU0EN	0	0

ADCEN	Control of A/D converter input clock
0	Stops input clock supply. • SFR used by the A/D converter cannot be written. • The A/D converter is in the reset status.
1	Enables input clock supply. • SFR used by the A/D converter can be read/written.

Notes 1. RTCEN bit is not provided in the 78K0R/IB3. In the 78K0R/IB3, bit 7 of PER0 register is fixed to 0.

2. IICAEN bit is not provided in the 78K0R/IB3 and the 38-pin and 44 pin products of the 78K0R/IC3. In the 78K0R/IB3 and the 38-pin and 44 pin products of the 78K0R/IC3, bit4 of PER0 register is fixed to 0.

Cautions 1. When setting the A/D converter, be sure to set ADCEN to 1 first. If ADCEN = 0, writing to a control register of the A/D converter is ignored, and, even if the register is read, only the default value is read (except for port mode registers 2, 8, 15 (PM2, PM8, PM15)).

2. Be sure to clear bits 0, 1, 3, and 6 (78K0R/IB3: 0, 1, 3, 4, 6, 7, 38-pin and 44-pin products of the 78K0R/IC3: 0, 1, 3, 4 and 6) of PER0 register to 0.

(2) A/D converter mode register (ADM)

This register sets the conversion time for analog input to be A/D converted, and starts/stops conversion.
ADM can be set by a 1-bit or 8-bit memory manipulation instruction.
Reset signal generation clears this register to 00H.

Figure 12-3. Format of A/D Converter Mode Register (ADM)

Address: FFF30H After reset: 00H R/W

Symbol	<7>	6	5	4	3	2	1	<0>
ADM	ADCS	ADMD	FR2[Note 1]	FR1[Note 1]	FR0[Note 1]	LV1[Note 1]	LV0[Note 1]	ADCE

ADCS	A/D conversion operation control
0	Stops conversion operation
1	Enables conversion operation

ADMD	A/D conversion operation mode specification
0	Select mode
1	Scan mode

ADCE	A/D voltage comparator operation control[Note 2]
0	Stops A/D voltage comparator operation
1	Enables A/D voltage comparator operation

Notes 1. For details of FR2 to FR0, LV1, LV0, and A/D conversion, see **Table 12-2 A/D Conversion Time Selection**.

2. The operation of the A/D voltage comparator is controlled by ADCS and ADCE, and it takes 1 μs from operation start to operation stabilization. Therefore, when ADCS is set to 1 after 1 μs or more has elapsed from the time ADCE is set to 1, the conversion result at that time has priority over the first conversion result. Otherwise, ignore data of the first conversion.

Table 12-1. Settings of ADCS and ADCE

ADCS	ADCE	A/D Conversion Operation
0	0	Stop status (DC power consumption path does not exist)
0	1	Conversion waiting mode (only A/D voltage comparator consumes power)
1	0	Setting prohibited
1	1	Conversion mode (A/D voltage comparator: enables operation)

Figure 12-4. Timing Chart When A/D Voltage Comparator Is Used

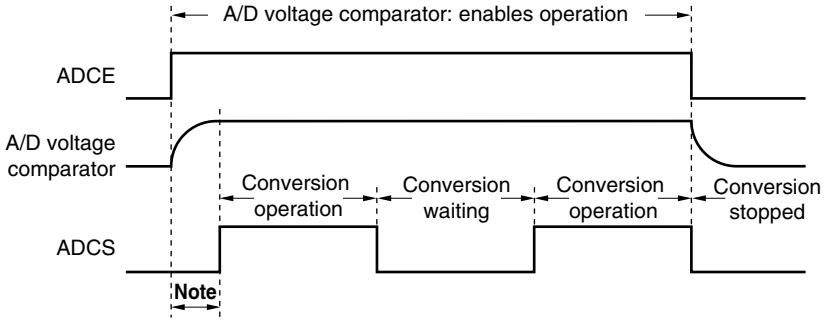

Note To stabilize the internal circuit, the time from the rising of the ADCE bit to the falling of the ADCS bit must be 1 μs or longer.

Caution A/D conversion must be stopped before rewriting bits FR0 to FR2, LV1, and LV0 to values other than the identical data.

Table 12-2. A/D Conversion Time Selection (1/2)

(1) 4.0 V ≤ AV_{REF} ≤ 5.5 V

A/D Converter Mode Register (ADM)					Mode	Conversion Time Selection				Conversion Clock (f_{AD})
FR2	FR1	FR0	LV1	LV0		f_{CLK} = 2 MHz	f_{CLK} = 5 MHz	f_{CLK} = 10 MHz	f_{CLK} = 20 MHz	
0	0	0	0	0	Standard	Setting prohibited	Setting prohibited	34.2 μs	17.1 μs	f_{CLK}/20
0	0	1					34.4 μs	17.2 μs	8.6 μs	f_{CLK}/10
0	1	0					27.6 μs	13.8 μs	6.9 μs	f_{CLK}/8
0	1	1				52.0 μs	20.8 μs	10.4 μs	5.2 μs	f_{CLK}/6
1	0	0				35.0 μs	14.0 μs	7.0 μs	Setting prohibited	f_{CLK}/4
1	0	1				26.5 μs	10.6 μs	5.3 μs		f_{CLK}/3
1	1	0				18.0 μs	7.2 μs	Setting prohibited		f_{CLK}/2
1	1	1				9.5 μs	Setting prohibited			f_{CLK}
×	×	×	0	1	Voltage boost	Setting prohibited				–
0	0	0	1	0	High speed 1	Setting prohibited	64.4 μs	32.2 μs	16.1 μs	f_{CLK}/20
0	0	1					32.4 μs	16.2 μs	8.1 μs	f_{CLK}/10
0	1	0				65.0 μs	26.0 μs	13.0 μs	6.5 μs	f_{CLK}/8
0	1	1				49.0 μs	19.6 μs	9.8 μs	4.9 μs	f_{CLK}/6
1	0	0				33.0 μs	13.2 μs	6.6 μs	3.3 μs	f_{CLK}/4
1	0	1				25.0 μs	10.0 μs	5.0 μs	2.5 μs	f_{CLK}/3
1	1	0				17.0 μs	6.8 μs	3.4 μs	Setting prohibited	f_{CLK}/2
1	1	1				9.0 μs	3.6 μs	Setting prohibited		f_{CLK}
0	0	0	1	1	High speed 2	Setting prohibited	Setting prohibited	34.2 μs	17.1 μs	f_{CLK}/20
0	0	1					34.4 μs	17.2 μs	8.6 μs	f_{CLK}/10
0	1	0					27.6 μs	13.8 μs	6.9 μs	f_{CLK}/8
0	1	1				52.0 μs	20.8 μs	10.4 μs	5.2 μs	f_{CLK}/6
1	0	0				35.0 μs	14.0 μs	7.0 μs	3.5 μs	f_{CLK}/4
1	0	1				26.5 μs	10.6 μs	5.3 μs	Setting prohibited	f_{CLK}/3
1	1	0				18.0 μs	7.2 μs	3.6 μs		f_{CLK}/2
1	1	1				9.5 μs	3.8 μs	Setting prohibited		f_{CLK}

Cautions 1. When rewriting FR2 to FR0, LV1, and LV0 to other than the same data, stop A/D conversion once (ADCS = 0) beforehand.

2. The above conversion time does not include clock frequency errors. Select conversion time, taking clock frequency errors into consideration.

Remark f_{CLK}: CPU/peripheral hardware clock frequency

Table 12-2. A/D Conversion Time Selection (2/2)

(2) 2.7 V ≤ AV_{REF} ≤ 5.5 V

A/D Converter Mode Register (ADM)					Mode	Conversion Time Selection				Conversion Clock (f_{AD})
FR2	FR1	FR0	LV1	LV0		f_{CLK} = 2 MHz	f_{CLK} = 5 MHz	f_{CLK} = 10 MHz	f_{CLK} = 20 MHz	
0	0	0	0	0	Standard	Setting prohibited	Setting prohibited	34.2 μs	17.1 μs	f_{CLK}/20
0	0	1					34.4 μs	17.2 μs	8.6 μs	f_{CLK}/10
0	1	0					27.6 μs	13.8 μs	Setting prohibited	f_{CLK}/8
0	1	1				52.0 μs	20.8 μs	10.4 μs		f_{CLK}/6
1	0	0				35.0 μs	14.0 μs	Setting prohibited		f_{CLK}/4
1	0	1				26.5 μs	10.6 μs			f_{CLK}/3
1	1	0				18.0 μs	Setting prohibited			f_{CLK}/2
1	1	1				9.5 μs				f_{CLK}
×	×	×	0	1	Voltage boost	Setting prohibited				–
×	×	×	1	0	High speed 1	Setting prohibited				–
0	0	0	1	1	High speed 2	Setting prohibited	Setting prohibited	34.2 μs	17.1 μs	f_{CLK}/20
0	0	1					34.4 μs	17.2 μs	8.6 μs	f_{CLK}/10
0	1	0					27.6 μs	13.8 μs	6.9 μs	f_{CLK}/8
0	1	1				52.0 μs	20.8 μs	10.4 μs	5.2 μs	f_{CLK}/6
1	0	0				35.0 μs	14.0 μs	7.0 μs	3.5 μs	f_{CLK}/4
1	0	1				26.5 μs	10.6 μs	5.3 μs	Setting prohibited	f_{CLK}/3
1	1	0				18.0 μs	7.2 μs	3.6 μs		f_{CLK}/2
1	1	1				9.5 μs	3.8 μs	Setting prohibited		f_{CLK}

Cautions 1. When rewriting FR2 to FR0, LV1, and LV0 to other than the same data, stop A/D conversion once (ADCS = 0) beforehand.

2. The above conversion time does not include clock frequency errors. Select conversion time, taking clock frequency errors into consideration.

Remark f_{CLK}: CPU/peripheral hardware clock frequency

Figure 12-5. A/D Converter Sampling and A/D Conversion Timing

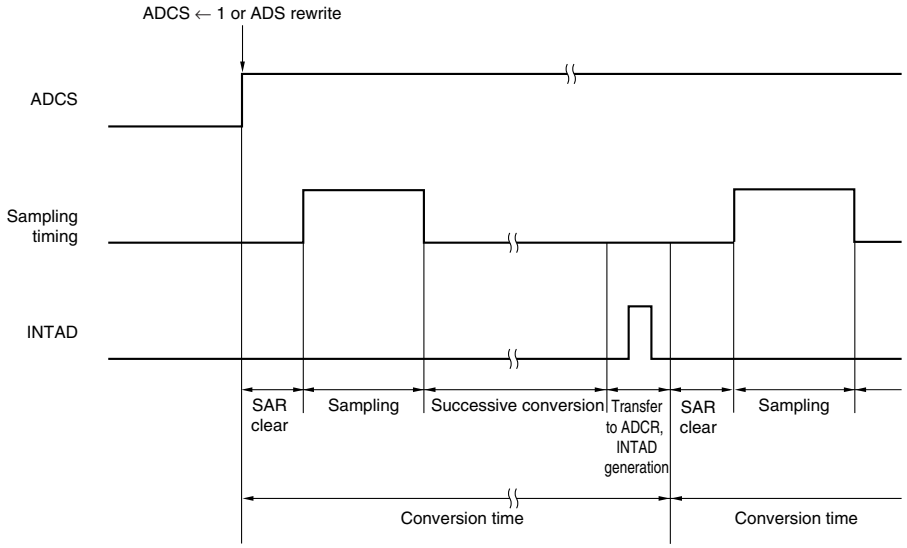

(3) A/D converter mode register 1 (ADM1)

This register sets the A/D conversion start trigger.

ADM1 can be set by a 1-bit or 8-bit memory manipulation instruction.

Reset signal generation clears this register to 00H.

Figure 12-6. Format of A/D Converter Mode Register 1 (ADM1)

Address: FFF42H After reset: 00H R/W

Symbol	<7>	6	5	4	3	2	1	<0>
ADM1	ADTMD	0	0	0	0	0	0	ADTRS

ADTMD	A/D trigger mode selection
0	Software trigger mode
1	Timer trigger mode (hardware trigger mode)

ADTRS	Timer trigger signal selection for A/D conversion
0	Timer trigger signal 0 for A/D conversion
1	Timer trigger signal 1 for A/D conversion

Caution Rewriting ADM1 during A/D conversion is prohibited. Rewrite it when conversion operation is stopped (ADCS = 0).

Remark For details of the timer trigger signals, refer to **7.4.8 Operation as A/D conversion trigger output function (type 1)** and **7.4.9 Operation as A/D conversion trigger output function (type 2)**.

(4) 10-bit A/D conversion result register (ADCR)

This register is a 16-bit register that stores the A/D conversion result in the select mode. The lower 6 bits are fixed to 0. Each time A/D conversion ends, the conversion result is loaded from the successive approximation register. The higher 8 bits of the conversion result are stored in FFF1FH and the lower 2 bits are stored in the higher 2 bits of FFF1EH.

ADCR can be read by a 16-bit memory manipulation instruction.

Reset signal generation clears this register to 0000H.

Figure 12-7. Format of 10-bit A/D Conversion Result Register (ADCR)

Address: FFF1FH, FFF1EH After reset: 0000H R

Symbol	FFF1FH								FFF1EH							
ADCR											0	0	0	0	0	0

Caution When writing to A/D converter mode register (ADM), analog input channel specification register (ADS), and A/D port configuration register (ADPC), the contents of ADCR may become undefined. Read the conversion result following conversion completion before writing to ADM, ADS, and ADPC. Using timing other than the above may cause an incorrect conversion result to be read.

(5) 8-bit A/D conversion result register (ADCRH)

This register is an 8-bit register that stores the A/D conversion result. The higher 8 bits of 10-bit resolution are stored.

ADCRH can be read by an 8-bit memory manipulation instruction.

Reset signal generation clears this register to 00H.

Figure 12-8. Format of 8-bit A/D Conversion Result Register (ADCRH)

Address: FFF1FH After reset: 00H R

Symbol	7	6	5	4	3	2	1	0
ADCRH								

Caution When writing to A/D converter mode register (ADM), analog input channel specification register (ADS), and A/D port configuration register (ADPC), the contents of ADCRH may become undefined. Read the conversion result following conversion completion before writing to ADM, ADS, and ADPC. Using timing other than the above may cause an incorrect conversion result to be read.

(6) Analog input channel specification register (ADS)

This register specifies the input channel of the analog voltage to be A/D converted.

ADS can be set by a 1-bit or 8-bit memory manipulation instruction.

Reset signal generation clears this register to 00H.

Figure 12-9. Format of Analog Input Channel Specification Register (ADS)

Address: FFF31H After reset: 00H R/W

Symbol	7	6	5	4	3	2	1	0
ADS	0	ADOAS	0	0	ADS3	ADS2	ADS1	ADS0

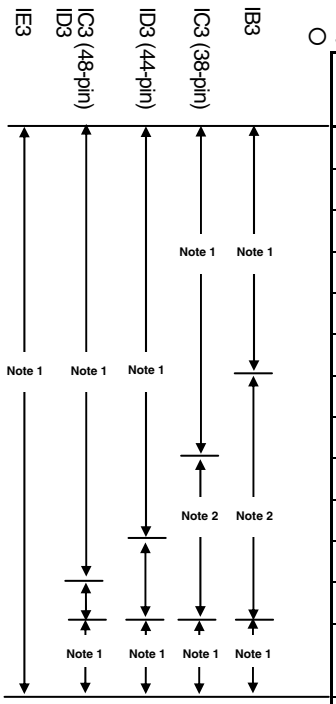

○ Select mode (ADMD = 0)

ADOAS	ADS3	ADS2	ADS1	ADS0	Analog input channel	Input source
0	0	0	0	0	ANI0	P20/ANI0 pin
0	0	0	0	1	ANI1	P21/ANI1 pin
0	0	0	1	0	ANI2	P22/ANI2 pin
0	0	0	1	1	ANI3	P23/ANI3 pin
0	0	1	0	0	ANI4	P24/ANI4 pin
0	0	1	0	1	ANI5	P25/ANI5 pin
0	0	1	1	0	ANI6	P26/ANI6 pin
0	0	1	1	1	ANI7	P27/ANI7 pin
0	1	0	0	0	ANI8	P150/ANI8 pin
0	1	0	0	1	ANI9	P151/ANI9 pin
0	1	0	1	0	ANI10	P152/ANI10 pin
0	1	0	1	1	ANI11	P153/ANI11 pin
1	×	×	×	×	PGAO	Programmable gain amplifier output signal
Other than the above					Setting prohibited	

Notes 1. Setting permitted

2. Setting prohibited

Cautions 1. Be sure to clear bits 4, 5, and 7 to "0".

2. Set a channel to be used for A/D conversion in the input mode by using port mode registers 2, 8, and 15 (PM2, PM8, PM15).

3. Do not set the pin that is set by ADPC as digital I/O by ADS.

4. Select the output signal (PGAO) of the programmable gain amplifier from PGAI pin as the analog input after setting the operation of the programmable gain amplifier (refer to 12.4.1 Basic operations of A/D converter).

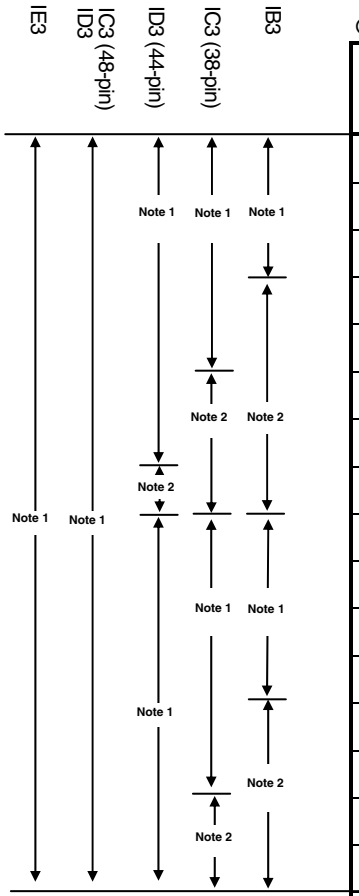

○ Scan mode (ADMD = 1)

ADOAS	ADS3	ADS2	ADS1	ADS0	Analog input channel			
					Scan 0	Scan 1	Scan 2	Scan 3
0	0	0	0	0	ANI0	ANI1	ANI2	ANI3
0	0	0	0	1	ANI1	ANI2	ANI3	ANI4
0	0	0	1	0	ANI2	ANI3	ANI4	ANI5
0	0	0	1	1	ANI3	ANI4	ANI5	ANI6
0	0	1	0	0	ANI4	ANI5	ANI6	ANI7
0	0	1	0	1	ANI5	ANI6	ANI7	ANI8
0	0	1	1	0	ANI6	ANI7	ANI8	ANI9
0	0	1	1	1	ANI7	ANI8	ANI9	ANI10
1	0	0	0	0	PGAO	ANI0	ANI1	ANI2
1	0	0	0	1	PGAO	ANI1	ANI2	ANI3
1	0	0	1	0	PGAO	ANI2	ANI3	ANI4
1	0	0	1	1	PGAO	ANI3	ANI4	ANI5
1	0	1	0	0	PGAO	ANI4	ANI5	ANI6
1	0	1	0	1	PGAO	ANI5	ANI6	ANI7
1	0	1	1	0	PGAO	ANI6	ANI7	ANI8
1	0	1	1	1	PGAO	ANI7	ANI8	ANI9
Other than the above					Setting prohibited			

Notes 1. Setting permitted
2. Setting prohibited

Cautions 1. Be sure to clear bits 4, 5, and 7 to “0”.
2. Set a channel to be used for A/D conversion in the input mode by using port mode registers 2, 8, and 15 (PM2, PM8, PM15).
3. Do not set the pin that is set by ADPC as digital I/O by ADS.
4. Select the output signal (PGAO) of the programmable gain amplifier from PGAI pin as the analog input after setting the operation of the programmable gain amplifier (refer to 12.4.1 Basic operations of A/D converter).

(7) A/D port configuration register (ADPC)

This register switches the ANI0/P20 to ANI7/P27 and ANI8/P150 to ANI11/P153 pins to analog input of A/D converter or digital I/O of port.

ADPC can be set by an 8-bit memory manipulation instruction.

Reset signal generation sets this register to 10H.

Figure 12-10. Format of A/D Port Configuration Register (ADPC)

Address: F0017H After reset: 10H R/W

Symbol	7	6	5	4	3	2	1	0
ADPC	0	0	0	ADPC4	ADPC3	ADPC2	ADPC1	ADPC0

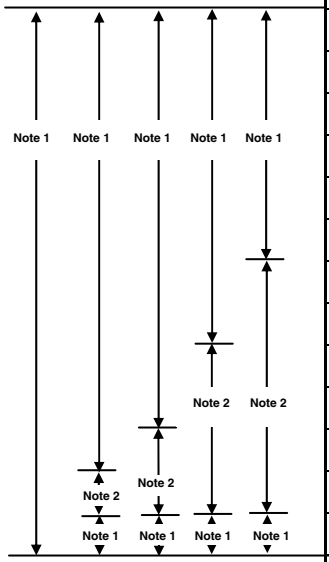

ADPC4	ADPC3	ADPC2	ADPC1	ADPC0	Analog input (A)/digital I/O (D) switching											
					Port 15				Port 2							
					ANI11/P153	ANI10/P152	ANI9/P151	ANI8/P150	ANI7/P27	ANI6/P26	ANI5/P25	ANI4/P24	ANI3/P23	ANI2/P22	ANI1/P21	ANI0/P20
0	0	0	0	0	A	A	A	A	A	A	A	A	A	A	A	A
0	0	0	0	1	A	A	A	A	A	A	A	A	A	A	A	D
0	0	0	1	0	A	A	A	A	A	A	A	A	A	A	D	D
0	0	0	1	1	A	A	A	A	A	A	A	A	A	D	D	D
0	0	1	0	0	A	A	A	A	A	A	A	A	D	D	D	D
0	0	1	0	1	A	A	A	A	A	A	A	D	D	D	D	D
0	0	1	1	0	A	A	A	A	A	A	D	D	D	D	D	D
0	0	1	1	1	A	A	A	A	A	D	D	D	D	D	D	D
0	1	0	0	0	A	A	A	A	D	D	D	D	D	D	D	D
0	1	0	0	1	A	A	A	D	D	D	D	D	D	D	D	D
0	1	0	1	0	A	A	D	D	D	D	D	D	D	D	D	D
0	1	0	1	1	A	D	D	D	D	D	D	D	D	D	D	D
1	0	0	0	0	D	D	D	D	D	D	D	D	D	D	D	D
Other than the above					Setting prohibited											

Notes 1. Setting permitted

2. Setting prohibited

Cautions 1. Set a channel to be used for A/D conversion in the input mode by using port mode register 2 and 15 (PM2, PM15).

2. Do not set the pin that is set by ADPC as digital I/O by ADS.

3. P20/ANI0 to P27/ANI7 and P150/ANI8 to P153/ANI11 are set as analog inputs in the order of P153/ANI11, …, P150/ANI8, P27/ANI7, …, P20/ANI0 by the A/D port configuration register (ADPC). When using P20/ANI0 to P27/ANI7 and P150/ANI8 to P153/ANI11 as analog inputs, start designing from P153/ANI11.

(8) Port input mode register 8 (PIM8)

This register enables or disables the input of port 8 in 1-bit units.

Disable the input to use the PGAI pin as the analog input. Enable the input to use the port function, or the external interrupt and timer Hi-Z control functions, because the digital input (use P8n pin as the analog input) is disabled in the initial state.

PIM8 can be set by a 1-bit or 8-bit memory manipulation instruction.

Reset signal generation clears this register to 00H.

Figure 12-11. Format of Port Input Mode Register 8 (PIM8)

Address: F0048H After reset: 00H R/W

Symbol	7	6	5	4	3	2	1	0
PIM8	0	0	0	0	PIM83	PIM82 Note	PIM81	PIM80

PIM8n	Selection of enabling or disabling P8n pin digital input (n = 0 to 3)
0	Disables digital input (use P8n pin as the analog input)
1	Enables digital input

Note PIM82 bit is not provided in the 78K0R/IB3.

(9) Port mode registers 2, 8, and 15 (PM2, PM8, PM15)

When using the ANI0/P20 to ANI7/P27, ANI8/P150 to ANI11/P153, and PGAI/P80 pins for analog input port, set PM20 to PM27, PM80, and PM150 to PM153 to 1. The output latches of P20 to P27, P80, and P150 to P153 at this time may be 0 or 1.

If PM20 to PM27, PM80, and PM150 to PM153 are set to 0, they cannot be used as analog input port pins.

PM2, PM8, and PM15 can be set by a 1-bit or 8-bit memory manipulation instruction.

Reset signal generation sets these registers to FFH.

Caution **If a pin is set as an analog input port, not the pin level but "0" is always read.**

Remarks P20/ANI0 to P25/ANI5 : 78K0R/IB3
P20/ANI0 to P27/ANI7 : 38-pin products of 78K0R/IC3
P20/ANI0 to P27/ANI7, P150/ANI8, P151/ANI9 : 44-pin products of 78K0R/IC3
P20/ANI0 to P27/ANI7, P150/ANI8 to P152/ANI10 : 48-pin products of 78K0R/IC3, and 78K0R/ID3
P20/ANI0 to P27/ANI7, P150/ANI8 to P153/ANI11 : 78K0R/IE3

Figure 12-12. Formats of Port Mode Registers 2, 8, and 15 (PM2, PM8, and PM15) (78K0R/IE3)

Address: FFF22H After reset: FFH R/W

Symbol	7	6	5	4	3	2	1	0
PM2	PM27	PM26	PM25	PM24	PM23	PM22	PM21	PM20

Address: FFF28H After reset: FFH R/W

Symbol	7	6	5	4	3	2	1	0
PM8	1	1	1	1	PM83	PM82	PM81	PM80

Address: FFF2FH After reset: FFH R/W

Symbol	7	6	5	4	3	2	1	0
PM15	1	1	1	1	PM153	PM152	PM151	PM150

PMmn	Pmn pin I/O mode selection (mn = 20 to 27, 80 to 83, 150 to 153)
0	Output mode (output buffer on)
1	Input mode (output buffer off)

Remark The figure shown above presents the format of port mode register 2, 8 and 15 of the 78K0R/IE3 products. For the format of port mode register of other products, see (1) Port mode registers (PMxx) in 4.3 Registers Controlling Port Function.

The ANI0/P20 to ANI7/P27, PGAI/P80, and ANI8/P150 to ANI11/P153 pins are as shown below depending on the settings of ADPC, ADS, PM2, PM8, and PM15.

Table 12-3. Setting Functions of ANI0/P20 to ANI7/P27, PGAI/P80, and ANI8/P150 to ANI11/P153 Pins

ADPC	PM2, PM8, and PM15	ADS	ANI0/P20 to ANI7/P27, PGAI/P80, and ANI8/P150 to ANI11/P153 Pins
Digital I/O selection	Input mode	–	Digital input
	Output mode	–	Digital output
Analog input selection	Input mode	Selects ANI.	Analog input (to be converted)
		Does not select ANI.	Analog input (not to be converted)
	Output mode	Selects ANI.	Setting prohibited
		Does not select ANI.	

Remarks
P20/ANI0 to P25/ANI5 : 78K0R/IB3
P20/ANI0 to P27/ANI7 : 38-pin products of 78K0R/IC3
P20/ANI0 to P27/ANI7, P150/ANI8, P151/ANI9 : 44-pin products of 78K0R/IC3
P20/ANI0 to P27/ANI7, P150/ANI8 to P152/ANI10 : 48-pin products of 78K0R/IC3, and 78K0R/ID3
P20/ANI0 to P27/ANI7, P150/ANI8 to P153/ANI11 : 78K0R/IE3

12.4 A/D Converter Operations

12.4.1 Basic operations of A/D converter

<1> Set bit 5 (ADCEN) of peripheral enable register 0 (PER0) to 1 to start the supply of the input clock to the A/D converter.

<2> Set the A/D conversion time by using bits 5 to 1 (FR2 to FR0, LV1, and LV0) of ADM, and set the operation mode by using bit 6 (ADMD) of ADM.

<3> Set bit 0 (ADCE) of A/D converter mode register (ADM) to 1 to start the operation of the A/D voltage comparator.

<4> Set the channels for A/D conversion to analog input by using the A/D port configuration register (ADPC) and set to input mode by using port mode registers (PM2, PM8, and PM15).

<5> Set the programmable gain amplifier operation to set the programmable gain amplifier output signal from PGAI pin (PGAO) for the analog input channel (refer to **8.4.1 Starting comparator and programmable gain amplifier operation**).

<6> Select one channel for A/D conversion using the analog input channel specification register (ADS).

<7> Use the A/D converter mode register 1 (ADM1) to set the trigger mode.

<8> Start the conversion operation by setting bit 7 (ADCS) of ADM to 1.
A timer trigger wait state is entered if the timer trigger mode is set in step <7>.
(<9> to <15> are operations performed by hardware.)

<9> The voltage input to the selected analog input channel is sampled by the sample & hold circuit.

<10> When sampling has been done for a certain time, the sample & hold circuit is placed in the hold state and the sampled voltage is held until the A/D conversion operation has ended.

<11> Bit 9 of the successive approximation register (SAR) is set. The series resistor string voltage tap is set to (1/2) AV_{REF} by the tap selector.

<12> The voltage difference between the series resistor string voltage tap and sampled voltage is compared by the voltage comparator. If the analog input is greater than (1/2) AV_{REF}, the MSB of SAR remains set to 1. If the analog input is smaller than (1/2) AV_{REF}, the MSB is reset to 0.

<13> Next, bit 8 of SAR is automatically set to 1, and the operation proceeds to the next comparison. The series resistor string voltage tap is selected according to the preset value of bit 9, as described below.
- Bit 9 = 1: (3/4) AV_{REF}
- Bit 9 = 0: (1/4) AV_{REF}

The voltage tap and sampled voltage are compared and bit 8 of SAR is manipulated as follows.
- Sampled voltage ≥ Voltage tap: Bit 8 = 1
- Sampled voltage < Voltage tap: Bit 8 = 0

<14> Comparison is continued in this way up to bit 0 of SAR.

<15> Upon completion of the comparison of 10 bits, an effective digital result value remains in SAR, and the result value is transferred to the A/D conversion result register (ADCR, ADCRH) and then latched.
At the same time, the A/D conversion end interrupt request (INTAD) can also be generated.

<16> Repeat steps <9> to <15>, until ADCS is cleared to 0.
To stop the A/D converter, clear ADCS to 0.
To restart A/D conversion from the status of ADCE = 1, start from <8>. To start A/D conversion again when ADCE = 0, set ADCE to 1, wait for 1 μs or longer, and start <8>. To change a channel of A/D conversion, start from <6>.

Caution Make sure the period of <3> to <8> is 1 μs or more.

Remark Two types of A/D conversion result registers are available.

- ADCR (16 bits): Store 10-bit A/D conversion value
- ADCRH (8 bits): Store 8-bit A/D conversion value

Figure 12-13. Basic Operation of A/D Converter

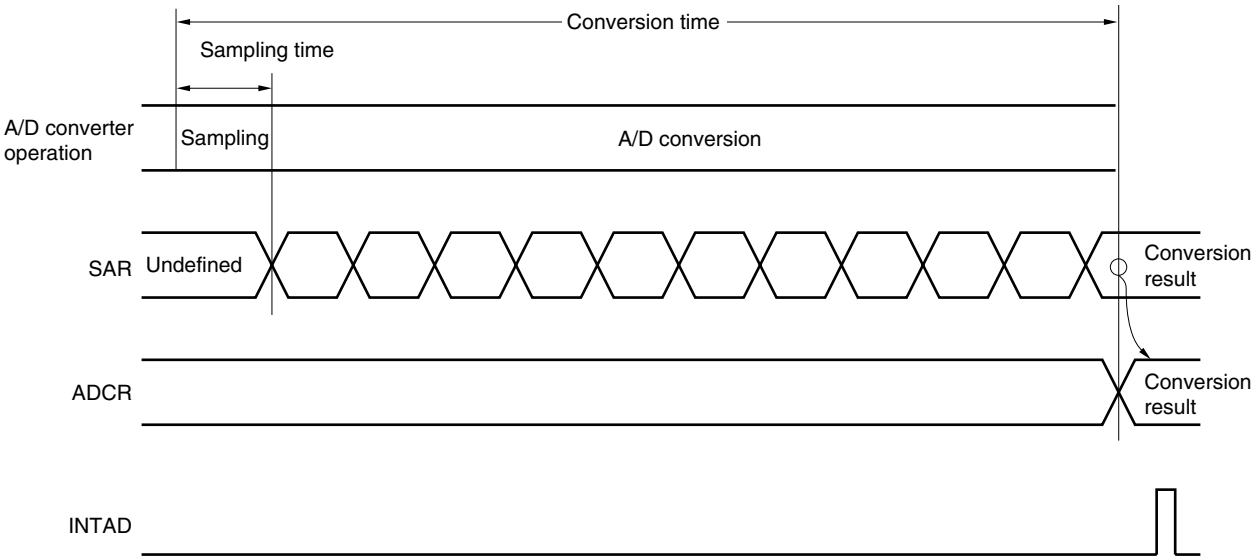

A/D conversion operations are performed continuously until bit 7 (ADCS) of A/D converter mode register (ADM) is reset (0) by software.

If a write operation is performed to the analog input channel specification register (ADS) during an A/D conversion operation, the conversion operation is initialized, and if the ADCS bit is set (1), conversion starts again from the beginning.

Reset signal generation clears the A/D conversion result register (ADCR, ADCRH) to 0000H or 00H.

12.4.2 Input voltage and conversion results

The relationship between the analog input voltage input to the analog input pins (ANI0 to ANI11, PGAI) and the theoretical A/D conversion result (stored in the 10-bit A/D conversion result register (ADCR)) is shown by the following expression.

$$SAR = INT\left(\frac{V_{AIN}}{AV_{REF}} \times 1024 + 0.5\right)$$
$$ADCR = SAR \times 64$$

or

$$\left(\frac{ADCR}{64} - 0.5\right) \times \frac{AV_{REF}}{1024} \leq V_{AIN} < \left(\frac{ADCR}{64} + 0.5\right) \times \frac{AV_{REF}}{1024}$$

where, INT( ): Function which returns integer part of value in parentheses
V_{AIN}: Analog input voltage
AV_{REF}: AV_{REF} pin voltage
ADCR: A/D conversion result register (ADCR) value
SAR: Successive approximation register

Figure 12-14 shows the relationship between the analog input voltage and the A/D conversion result.

Figure 12-14. Relationship Between Analog Input Voltage and A/D Conversion Result

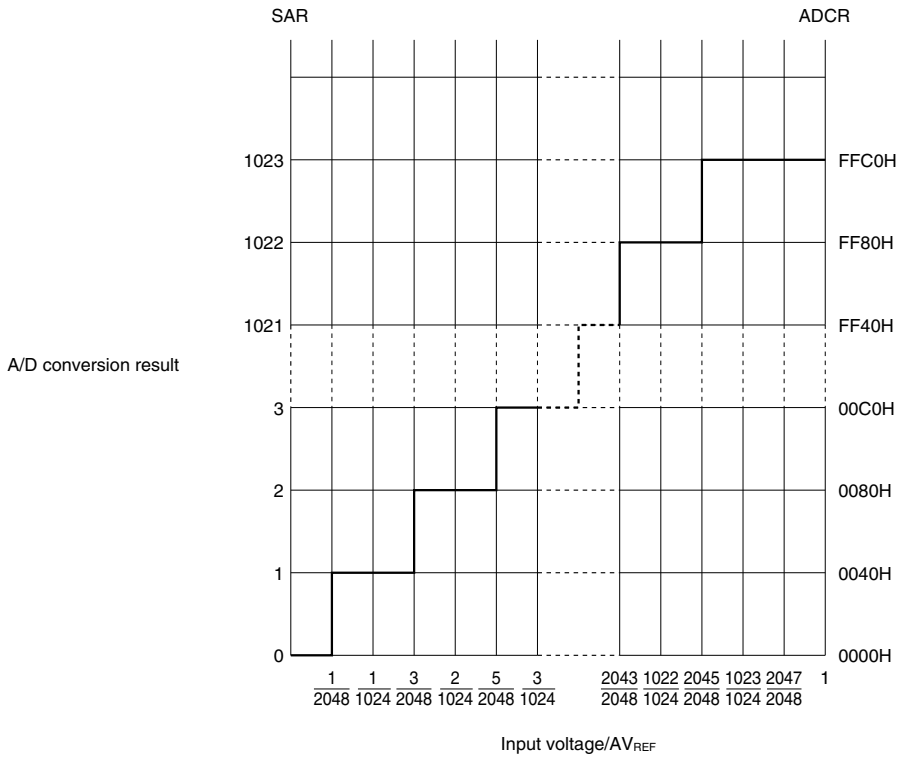

Remarks ANI0 to ANI5 : 78K0R/IB3
ANI0 to ANI7 : 38-pin products of 78K0R/IC3
ANI0 to ANI9 : 44-pin products of 78K0R/IC3
ANI0 to ANI10 : 48-pin products of 78K0R/IC3, and 78K0R/ID3
ANI0 to ANI11 : 78K0R/IE3

12.4.3 Trigger mode selection

The following two trigger modes that set the A/D conversion start timing are provided. These trigger modes are set by the ADM1 register.

- Software trigger mode
- Timer trigger mode (hardware trigger mode)

(1) Software trigger mode

This mode is used to start A/D conversion of the analog input channels (ANI0 to ANI11, PGAO), which have been selected by the analog input channel specification register (ADS), by setting ADCS to 1.

A/D conversion is repeatedly performed as long as the ADCS bit is not cleared to 0, after completion of A/D conversion.

If the ADM, ADM1, or ADS register is written during conversion, A/D conversion is aborted. In this case, A/D conversion is started again from the beginning in the select mode, and A/D conversion is started again from scan 0 in the scan mode.

(2) Timer trigger mode (hardware trigger mode)

This mode is used to start A/D conversion of the analog input channels (ANI0 to ANI11, PGAO), which have been selected by the analog input channel specification register (ADS), by setting ADCS to 1 and detecting timer trigger signals 0 and 1.

A/D conversion is repeatedly performed as long as the ADCS bit is not cleared to 0, after completion of A/D conversion.

If a timer trigger signal is generated during A/D conversion or if the ADM, ADM1, or ADS register is written during conversion, A/D conversion is aborted. In this case, A/D conversion is started again from the beginning in the select mode, and A/D conversion is started again from scan 0 in the scan mode.

Remarks ANI0 to ANI5 : 78K0R/IB3
ANI0 to ANI7 : 38-pin products of 78K0R/IC3
ANI0 to ANI9 : 44-pin products of 78K0R/IC3
ANI0 to ANI10 : 48-pin products of 78K0R/IC3 and 78K0R/ID3
ANI0 to ANI11 : 78K0R/IE3

12.4.4 A/D converter operation modes

The select mode and scan mode are provided as the A/D converter operation modes.

(1) Select mode

One analog input specified by the analog input channel specification register (ADS), while the ADMD bit of A/D converter mode register (ADM) is 0, is A/D converted.

When A/D conversion is complete, the conversion result is stored in the A/D conversion result register (ADCR) and the A/D conversion end interrupt request signal (INTAD) is generated.

If anything is written to ADM, ADM1, or ADS during conversion, A/D conversion is aborted. In this case, A/D conversion is started again from the beginning, regardless of being in the software trigger mode or timer trigger mode (hardware trigger mode).

Figure 12-15. Example of Select Mode Operation Timing

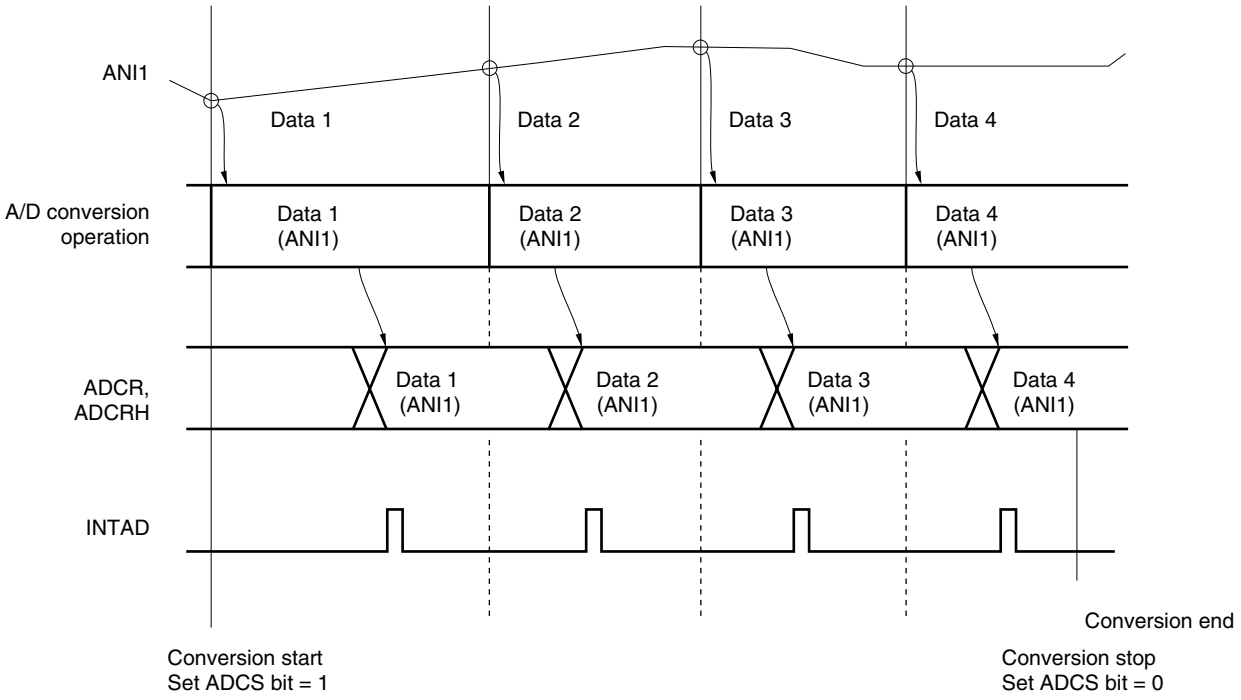

(2) Scan mode

The four analog input channels of scans 0 to 3, which are specified by the analog input channel specification register (ADS), while the ADMD bit of A/D converter mode register (ADM) is 1, are A/D converted successively. A/D conversion is performed in sequence, starting from the analog input channel specified by scan 0.

When A/D conversion of one analog input is complete, the conversion result is stored in the A/D conversion result register (ADCR) and the A/D conversion end interrupt request signal (INTAD) is generated.

The A/D conversion results of all the analog input channels are stored in ADCR. It is therefore recommended to save the contents of ADCR to RAM, once A/D conversion of one analog input channel has been completed.

When one A/D conversion ends, the next A/D conversion is started successively, regardless of being set to the trigger mode.

If anything is written to ADM, ADM1, or ADS during conversion, A/D conversion is aborted. In this case, A/D conversion is started again from the analog input channel of scan 0, regardless of being in the software trigger mode or timer trigger mode (hardware trigger mode).

Figure 12-16. Example of Scan Mode Operation Timing

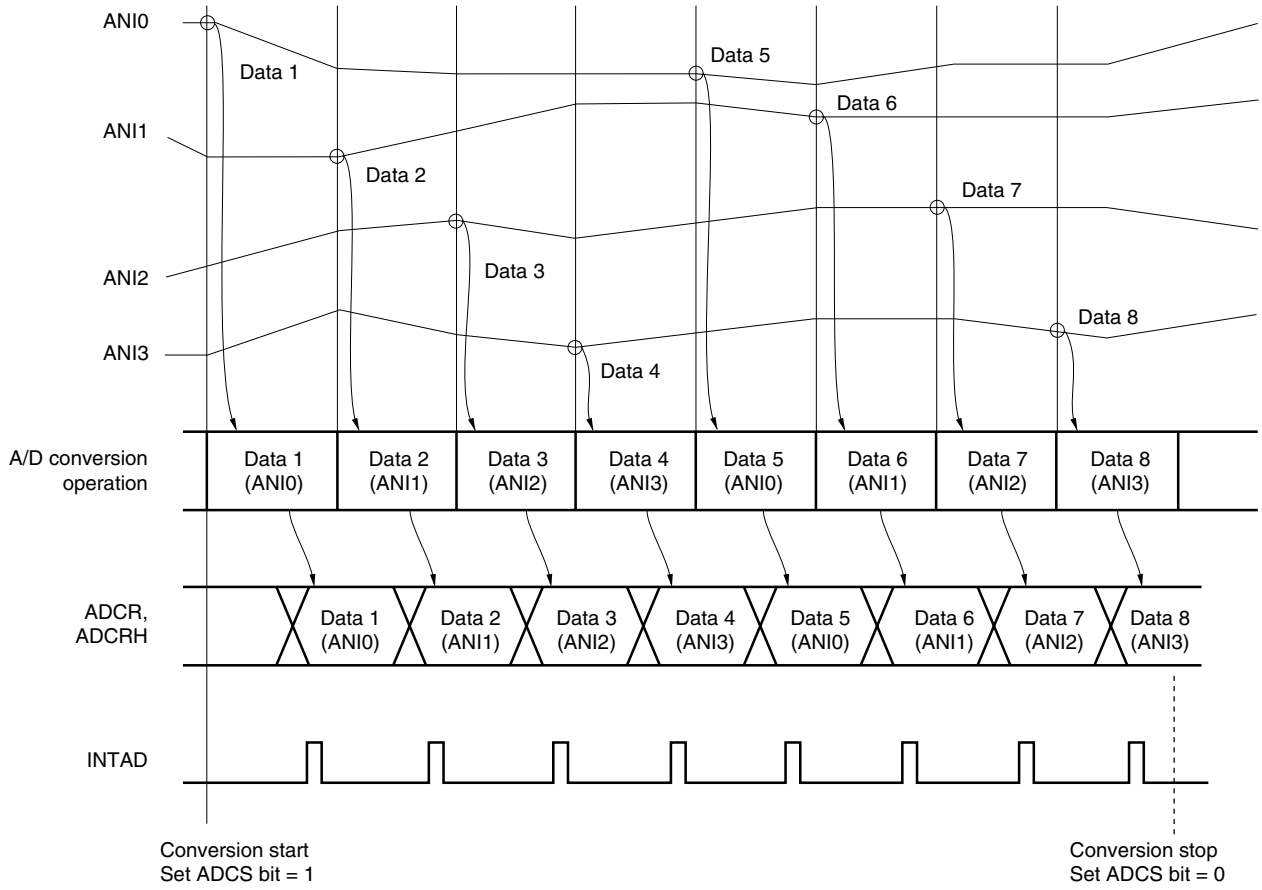

The setting methods are described below.

<1> Set bit 5 (ADCEN) of peripheral enable register 0 (PER0) to 1.
<2> Select the conversion time by using bits 5 to 1 (FR2 to FR0, LV1, and LV0) of ADM, and select the operation mode by using bit 6 (ADMD) of ADM.
<3> Set bit 0 (ADCE) of A/D converter mode register (ADM) to 1.
<4> Set the channel to be used in the analog input mode by using bits 4 to 0 (ADPC4 to ADPC0) of the A/D port configuration register (ADPC), bits 7 to 0 (PM27 to PM20) of port mode register 2 (PM2), bit 0 (PM80) of port mode register 8 (PM8), and bits 3 to 0 (PM153 to PM150) of port mode register 15 (PM15).
<5> Set the programmable gain amplifier operation to set the programmable gain amplifier output signal from PGAI pin (PGAO) for the analog input channel (refer to **8.4.1 Starting comparator and programmable gain amplifier operation**).
<6> Select a channel to be used by using bits 6 and 3 to 0 (ADOAS, ADS3 to ADS0) of the analog input channel specification register (ADS).
<7> Use bits 0 and 7 (ADTRS, ADTMD) of A/D converter mode register 1 (ADM1) to set the trigger mode.
<8> Set bit 7 (ADCS) of ADM to 1 to start A/D conversion.
<9> When one A/D conversion has been completed, an interrupt request signal (INTAD) is generated.
<10> Transfer the A/D conversion data to the A/D conversion result register (ADCR, ADCRH).

<Change the channel>

<11> Change the channel using bits 6 and 3 to 0 (ADOAS, ADS3 to ADS0) of ADS to start A/D conversion.
<12> When one A/D conversion has been completed, an interrupt request signal (INTAD) is generated.
<13> Transfer the A/D conversion data to the A/D conversion result register (ADCR, ADCRH).

<Complete A/D conversion>

<14> Clear ADCS to 0.
<15> Clear ADCE to 0.
<16> Clear bit 5 (ADCEN) of peripheral enable register 0 (PER0) to 0.

Cautions 1. Make sure the period of <3> to <8> is 1 μs or more.
2. <3> may be done between <4> and <6>.
3. <3> can be omitted. However, ignore data of the first conversion after <8> in this case.
4. The period from <9> to <12> differs from the conversion time set using bits 5 to 1 (FR2 to FR0, LV1, LV0) of ADM. The period from <11> to <12> is the conversion time set using FR2 to FR0, LV1, and LV0.

12.5 How to Read A/D Converter Characteristics Table

Here, special terms unique to the A/D converter are explained.

(1) Resolution

This is the minimum analog input voltage that can be identified. That is, the percentage of the analog input voltage per bit of digital output is called 1LSB (Least Significant Bit). The percentage of 1LSB with respect to the full scale is expressed by %FSR (Full Scale Range).

1LSB is as follows when the resolution is 10 bits.

$1LSB = 1/2^{10} = 1/1024$
$= 0.098\%FSR$

Accuracy has no relation to resolution, but is determined by overall error.

(2) Overall error

This shows the maximum error value between the actual measured value and the theoretical value.
Zero-scale error, full-scale error, integral linearity error, and differential linearity errors that are combinations of these express the overall error.
Note that the quantization error is not included in the overall error in the characteristics table.

(3) Quantization error

When analog values are converted to digital values, a ±1/2LSB error naturally occurs. In an A/D converter, an analog input voltage in a range of ±1/2LSB is converted to the same digital code, so a quantization error cannot be avoided.
Note that the quantization error is not included in the overall error, zero-scale error, full-scale error, integral linearity error, and differential linearity error in the characteristics table.

Figure 12-17. Overall Error

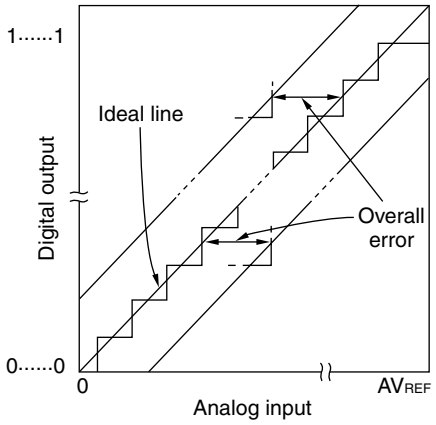

Figure 12-18. Quantization Error

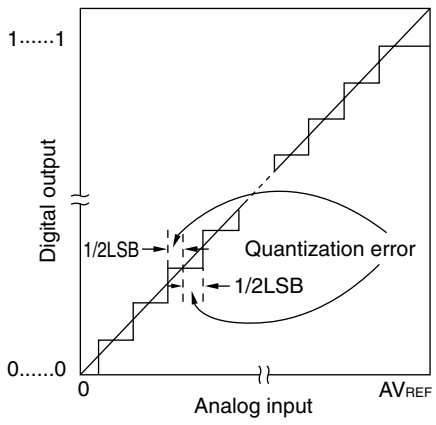

(4) Zero-scale error

This shows the difference between the actual measurement value of the analog input voltage and the theoretical value (1/2LSB) when the digital output changes from 0.....000 to 0.....001.
If the actual measurement value is greater than the theoretical value, it shows the difference between the actual measurement value of the analog input voltage and the theoretical value (3/2LSB) when the digital output changes from 0……001 to 0……010.

(5) Full-scale error

This shows the difference between the actual measurement value of the analog input voltage and the theoretical value (Full-scale − 3/2LSB) when the digital output changes from 1.....110 to 1.....111.

(6) Integral linearity error

This shows the degree to which the conversion characteristics deviate from the ideal linear relationship. It expresses the maximum value of the difference between the actual measurement value and the ideal straight line when the zero-scale error and full-scale error are 0.

(7) Differential linearity error

While the ideal width of code output is 1LSB, this indicates the difference between the actual measurement value and the ideal value.

Figure 12-19. Zero-Scale Error

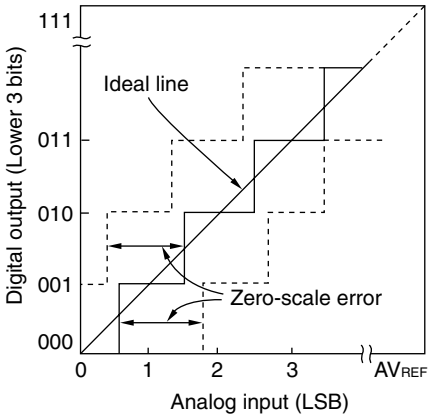

Figure 12-20. Full-Scale Error

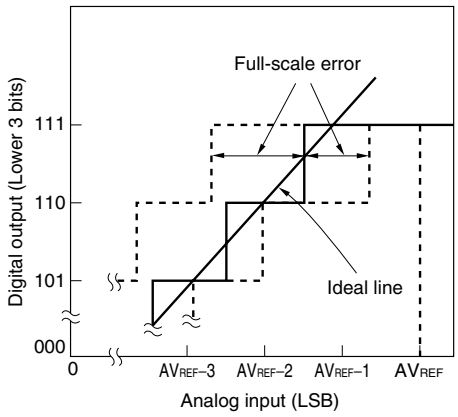

Figure 12-21. Integral Linearity Error

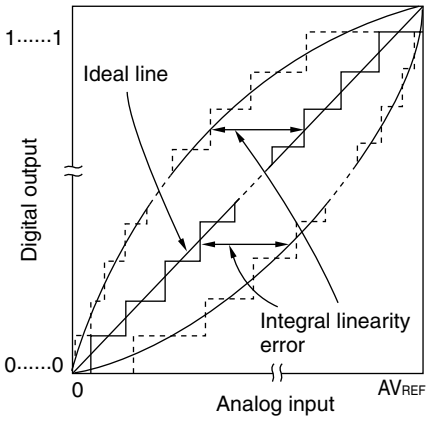

Figure 12-22. Differential Linearity Error

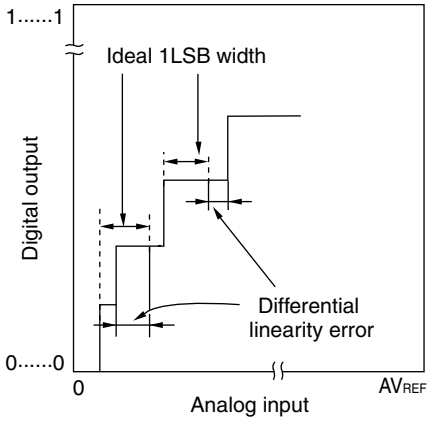

(8) Conversion time

This expresses the time from the start of sampling to when the digital output is obtained.

The sampling time is included in the conversion time in the characteristics table.

(9) Sampling time

This is the time the analog switch is turned on for the analog voltage to be sampled by the sample & hold circuit.

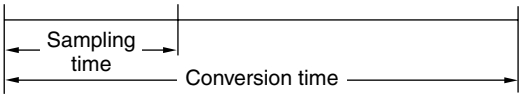

12.6 Cautions for A/D Converter

(1) Operating current in STOP mode

Shift to STOP mode after stopping the A/D converter (by setting bit 7 (ADCS) of the A/D converter mode register (ADM) to 0). The operating current can be reduced by setting bit 0 (ADCE) of the A/D converter mode register (ADM) to 0 at the same time.

To restart from the standby status, clear bit 0 (ADIF) of interrupt request flag register 1L (IF1L) to 0 and start operation.

(2) Input range of ANI0 to ANI11

Observe the rated range of the ANI0 to ANI11 input voltage. If a voltage of AV_{REF} or higher and AV_{SS} or lower (even in the range of absolute maximum ratings) is input to an analog input channel, the converted value of that channel becomes undefined. In addition, the converted values of the other channels may also be affected.

(3) Conflicting operations

<1> Conflict between A/D conversion result register (ADCR, ADCRH) write and ADCR or ADCRH read by instruction upon the end of conversion

ADCR or ADCRH read has priority. After the read operation, the new conversion result is written to ADCR or ADCRH.

<2> Conflict between ADCR or ADCRH write and A/D converter mode register (ADM) write, analog input channel specification register (ADS), or A/D port configuration register (ADPC) write upon the end of conversion.

ADM, ADS, or ADPC write has priority. ADCR or ADCRH write is not performed, nor is the conversion end interrupt signal (INTAD) generated.

(4) Noise countermeasures

To maintain the 10-bit resolution, attention must be paid to noise input to the AV_{REF} pin and pins ANI0 to ANI11.

<1> Connect a capacitor with a low equivalent resistance and a good frequency response to the power supply.

<2> The higher the output impedance of the analog input source, the greater the influence. To reduce the noise, connecting external C as shown in Figure 12-23 is recommended.

<3> Do not switch these pins with other pins during conversion.

<4> The accuracy is improved if the HALT mode is set immediately after the start of conversion.

Remarks ANI0 to ANI5 : 78K0R/IB3
ANI0 to ANI7 : 38-pin products of 78K0R/IC3
ANI0 to ANI9 : 44-pin products of 78K0R/IC3
ANI0 to ANI10 : 48-pin products of 78K0R/IC3 and 78K0R/ID3
ANI0 to ANI11 : 78K0R/IE3

Figure 12-23. Analog Input Pin Connection

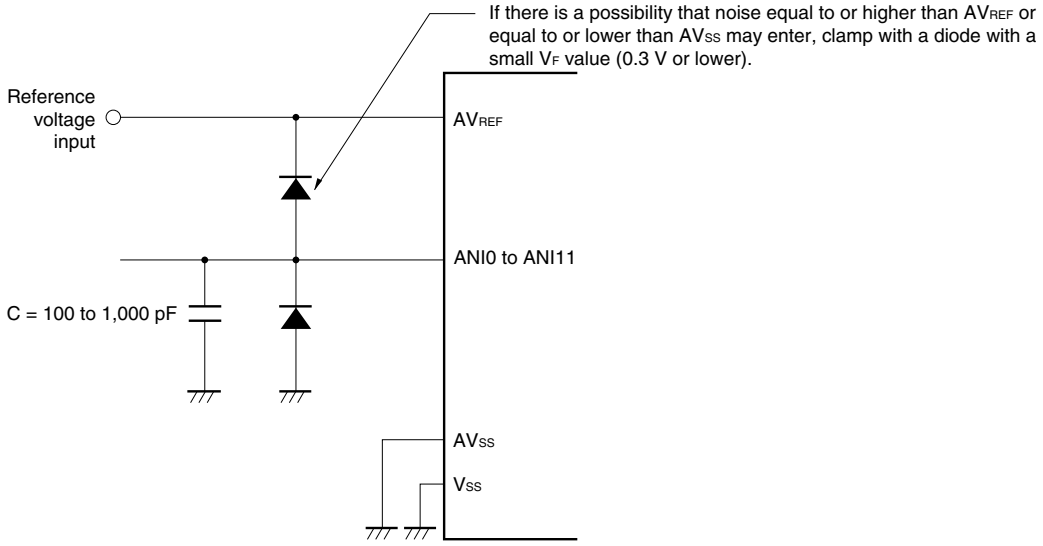

(5) ANI0/P20 to ANI7/P27 and ANI8/P150 to ANI11/P153

<1> The analog input pins (ANI0 to ANI7) are also used as input port pins (P20 to P27).
The analog input pins (ANI8 to ANI11) are also used as input port pins (P150 to P153).
When A/D conversion is performed with any of ANI0 to ANI11 selected, do not access P20 to P27 and P150 to P153 while conversion is in progress; otherwise the conversion resolution may be degraded. It is recommended to select pins used as P20 to P27 and P150 to P153 starting with the ANI0/P20 that is the furthest from AV_{REF}.

<2> If a digital pulse is applied to the pins adjacent to the pins currently used for A/D conversion, the expected value of the A/D conversion may not be obtained due to coupling noise. Therefore, do not apply a pulse to the pins adjacent to the pin undergoing A/D conversion.

(6) Input impedance of ANI0 to ANI11 pins

This A/D converter charges a sampling capacitor for sampling during sampling time.
Therefore, only a leakage current flows when sampling is not in progress, and a current that charges the capacitor flows during sampling. Consequently, the input impedance fluctuates depending on whether sampling is in progress, and on the other states.
To make sure that sampling is effective, however, it is recommended to keep the output impedance of the analog input source to within 1 kΩ, and to connect a capacitor of about 100 pF to the ANI0 to ANI11 pins (see **Figure 12-23**).

(7) AV_{REF} pin input impedance

A series resistor string of several tens of kΩ is connected between the AV_{REF} and AV_{SS} pins.
Therefore, if the output impedance of the reference voltage source is high, this will result in a series connection to the series resistor string between the AV_{REF} and AV_{SS} pins, resulting in a large reference voltage error.

Remarks ANI0 to ANI5 : 78K0R/IB3
ANI0 to ANI7 : 38-pin products of 78K0R/IC3
ANI0 to ANI9 : 44-pin products of 78K0R/IC3
ANI0 to ANI10 : 48-pin products of 78K0R/IC3, 78K0R/ID3
ANI0 to ANI11 : 78K0R/IE3

(8) Interrupt request flag (ADIF)

The interrupt request flag (ADIF) is not cleared even if the analog input channel specification register (ADS) is changed.

Therefore, if an analog input pin is changed during A/D conversion, the A/D conversion result and ADIF for the pre-change analog input may be set just before the ADS rewrite. Caution is therefore required since, at this time, when ADIF is read immediately after the ADS rewrite, ADIF is set despite the fact A/D conversion for the post-change analog input has not ended.

When A/D conversion is stopped and then resumed, clear ADIF before the A/D conversion operation is resumed.

Figure 12-24. Timing of A/D Conversion End Interrupt Request Generation

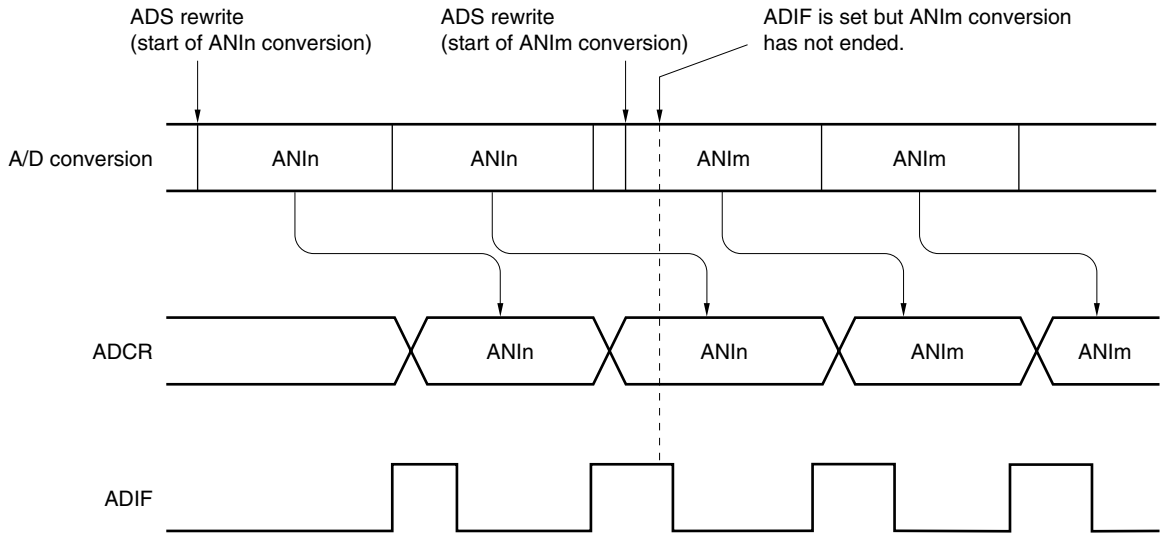

Remarks n = 0 to 5, m = 0 to 5 : 78K0R/IB3
n = 0 to 7, m = 0 to 7 : 38-pin products of 78K0R/IC3
n = 0 to 9, m = 0 to 9 : 44-pin products of 78K0R/IC3
n = 0 to 10, m = 0 to 10 : 48-pin products of 78K0R/IC3, and 78K0R/ID3
n = 0 to 11, m = 0 to 11 : 78K0R/IE3

(9) Conversion results just after A/D conversion start

The first A/D conversion value immediately after A/D conversion starts may not fall within the rating range if the ADCS bit is set to 1 within 1 μs after the ADCE bit was set to 1. Take measures such as polling the A/D conversion end interrupt request (INTAD) and removing the first conversion result.

(10) A/D conversion result register (ADCR, ADCRH) read operation

When a write operation is performed to A/D converter mode register (ADM), A/D converter mode register 1 (ADM1), analog input channel specification register (ADS), and A/D port configuration register (ADPC), the contents of ADCR and ADCRH may become undefined. Read the conversion result following conversion completion before writing to ADM, ADM1, ADS, or ADPC. Using a timing other than the above may cause an incorrect conversion result to be read.

(11) Internal equivalent circuit

The equivalent circuit of the analog input block is shown below.

Figure 12-25. Internal Equivalent Circuit of ANIn Pin

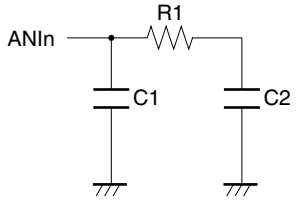

Table 12-4. Resistance and Capacitance Values of Equivalent Circuit (Reference Values)

AV_{REF}	Mode	R1	C1	C2
4.0 V ≤ V_{DD} ≤ 5.5 V	Standard	5.2 kΩ	8 pF	6.3 pF
	High speed 1	5.2 kΩ		
	High speed 2	7.8 kΩ		
2.7 V ≤ V_{DD} < 4.0 V	Standard	18.6 kΩ		
	High speed 2	7.8 kΩ		

Remarks 1. The resistance and capacitance values shown in Table 12-4 are not guaranteed values.

2. n = 0 to 5 : 78K0R/IB3
n = 0 to 7 : 38-pin products of 78K0R/IC3
n = 0 to 9 : 44-pin products of 78K0R/IC3
n = 0 to 10 : 48-pin products of 78K0R/IC3 and 78K0R/ID3
n = 0 to 11 : 78K0R/IE3

CHAPTER 13 SERIAL ARRAY UNIT

The serial array unit has four serial channels, each of which can be used for 3-wire serial (CSI), UART, and simplified I^2C communication.

Function assignment of each channel supported by the 78K0R/Ix3 is as shown below.

Channel	Used as CSI	Used as UART	Used as Simplified I^2C
0	CSI00 Note	UART0 (supporting LIN-bus)	–
1	CSI01 Note		–
2	CSI10	UART1	IIC10
3	–		–

When “UART0” is used for channels 0 and 1, CSI00 Note and CSI01 Note cannot be used, but CSI10, UART1, or IIC10 can be used.

Note CSI00 and CSI01 are only available in the 44-pin and 48-pin products of the 78K0R/IC3 and in the 78K0R/ID3 and 78K0R/IE3.

13.1 Functions of Serial Array Unit

Each serial interface supported by the 78K0R/Ix3 has the following features.

13.1.1 3-wire serial I/O (CSI00, CSI01, CSI10)

Data is transmitted or received in synchronization with the serial clock (SCK) output from the master channel.
3-wire serial communication is clocked communication performed by using three communication lines: one for the serial clock (SCK), one for transmitting serial data (SO), one for receiving serial data (SI).

For details about the settings, see **13.5 Operation of 3-Wire Serial I/O (CSI00, CSI01, CSI10) Communication.**

[Data transmission/reception]

- Data length of 7 or 8 bits
- Phase control of transmit/receive data
- MSB/LSB first selectable
- Level setting of transmit/receive data

[Clock control]

- Master/slave selection
- Phase control of I/O clock
- Setting of transfer period by prescaler and internal counter of each channel
- Maximum transfer rate

  During master communication: Max. $f_{CLK}/4$, during slave communication: Max. $f_{MCK}/6$ [Note]

[Interrupt function]

- Transfer end interrupt/buffer empty interrupt

[Error detection flag]

- Overrun error

Note Use the clocks within a range satisfying the $\overline{SCK}$ cycle time (t_{KCY}) characteristics (see **CHAPTER 28 ELECTRICAL SPECIFICATIONS**).

Remark CSI00 and CSI01 are only available in the 44-pin and 48-pin products of the 78K0R/IC3 and in the 78K0R/ID3 and 78K0R/IE3.

13.1.2 UART (UART0, UART1)

This is a start-stop synchronization function using two lines: serial data transmission (TxD) and serial data reception (RxD) lines. By using these two communication lines, each data frame, which consist of a start bit, data, parity bit, and stop bit, is transferred asynchronously (using the internal baud rate) between the microcontroller and the other communication party. Full-duplex UART communication can be performed by using a channel dedicated to transmission (even-numbered channel) and a channel dedicated to reception (odd-numbered channel). The LIN-bus can be implemented by using timer array unit TAUS with an external interrupt (INTP0).

For details about the settings, see **13.6 Operation of UART (UART0, UART1) Communication.**

[Data transmission/reception]

- Data length of 5, 7, or 8 bits
- Select the MSB/LSB first
- Level setting of transmit/receive data and select of reverse
- Parity bit appending and parity check functions
- Stop bit appending

[Interrupt function]

- Transfer end interrupt/buffer empty interrupt
- Error interrupt in case of framing error, parity error, or overrun error

[Error detection flag]

- Framing error, parity error, or overrun error

The LIN-bus is accepted in UART0 (0 and 1 channels)

[LIN-bus functions]

- Wakeup signal detection
- Sync break field (SBF) detection
- Sync field measurement, baud rate calculation

13.1.3 Simplified I²C (IIC10)

This is a clocked communication function to communicate with two or more devices by using two lines: serial clock (SCL) and serial data (SDA). This simplified I²C is designed for single communication with a device such as EEPROM, flash memory, or A/D converter, and therefore, it functions only as a master.

Make sure by using software, as well as operating the control registers, that the AC specifications of the start and stop conditions are observed.

For details about the settings, see **13.7 Operation of Simplified I²C (IIC10)**

[Data transmission/reception]

- Master transmission, master reception (only master function with a single master)
- ACK output function[Note] and ACK detection function
- Data length of 8 bits (When an address is transmitted, the address is specified by the higher 7 bits, and the least significant bit is used for R/W control.)
- Manual generation of start condition and stop condition

[Interrupt function]

- Transfer end interrupt

[Error detection flag]

- Parity error (ACK error)

* [Functions not supported by simplified I²C]

- Slave transmission, slave reception
- Arbitration loss detection function
- Wait detection functions

Note When receiving the last data, ACK will not be output if 0 is written to the SOE02 bit (serial output enable register 0 (SOE0)) bit and serial communication data output is stopped. See the processing flow in **13.7.3 (2)** for details.

Remark To use an I²C bus of full function, see **CHAPTER 14 SERIAL INTERFACE IICA (48-pin products of 78K0R/IC3, 78K0R/ID3 and 78K0R/IE3 only)**.

13.2 Configuration of Serial Array Unit

The serial array unit includes the following hardware.

Table 13-1. Configuration of Serial Array Unit

Item	Configuration
Shift register	8 bits
Buffer register	Lower 8 bits of serial data register 0n (SDR0n)[Note 1]
Serial clock I/O	SCK00[Note 2], SCK01[Note 2], SCK10 pins (for 3-wire serial I/O), SCL10 pin (for simplified I^2C)
Serial data input	SI00[Note 2], SI01[Note 2], SI10 pins (for 3-wire serial I/O), RxD0 pin (for UART supporting LIN-bus), RxD1 pins (for UART)
Serial data output	SO00[Note 2], SO0[Note 2]1, SO10 pins (for 3-wire serial I/O), TxD0 pin (for UART supporting LIN-bus), TxD1 pin (for UART), output controller
Serial data I/O	SDA10 pin (for simplified I^2C)
Control registers	<Registers of unit setting block> • Peripheral enable register 0 (PER0) • Serial clock select register 0 (SPS0) • Serial channel enable status register 0 (SE0) • Serial channel start register 0 (SS0) • Serial channel stop register 0 (ST0) • Serial output enable register 0 (SOE0) • Serial output register 0 (SO0) • Serial output level register 0 (SOL0) • Input switch control register (ISC) • Noise filter enable register 0 (NFEN0)
	<Registers of each channel> • Serial data register 0n (SDR0n) • Serial mode register 0n (SMR0n) • Serial communication operation setting register 0n (SCR0n) • Serial status register 0n (SSR0n) • Serial flag clear trigger register 0n (SIR0n) • Port input mode registers 3, 7 (PIM3, PIM7)[Note 3] • Port output mode registers 3, 7 (POM3, POM7)[Note 3] • Port mode registers 1, 3, 7 (PM1, PM3, PM7)[Note 4] • Port registers 1, 3, 7 (P1, P3, P7)[Note 4]

(Note and Remark are given on the next page.)

Notes 1. The lower 8 bits of the serial data register 0n (SDR0n) can be read or written as the following SFR, depending on the communication mode.

- CSIp communication … SIOp (CSIp data register)
- UARTq reception … RXDq (UARTq receive data register)
- UARTq transmission … TXDq (UARTq transmit data register)
- IIC10 communication … SIO10 (IIC10 data register)

2. 44-pin and 48-pins products of 78K0R/IC3, 78K0R/ID3 and 78K0R/IE3 only.

3. PIM7 and POM7 register are not provided in the 78K0R/IB3.

4. The PM1 and P1 registers are only provided in the 78K0R/IB3. The PM7 and P7 registers are not provided in the 78K0R/IB3.

Remark n: Channel number (n = 0 to 3),

p: CSI number (p = 10 (78K0R/IB3 and 38-pin products of 78K0R/IC3), p = 00, 01 and 10 (44-pin and 48-pin products of 78K0R/IC3, 78K0R/ID3 and 78K0R/IE3))

q: UART number (q = 0, 1)

Figure 13-1 and 13-2 shows the block diagram of the serial array unit.

Figure 13-1. Block Diagram of Serial Array Unit (78K0R/IB3 and 38-pin products of 78K0R/IC3)

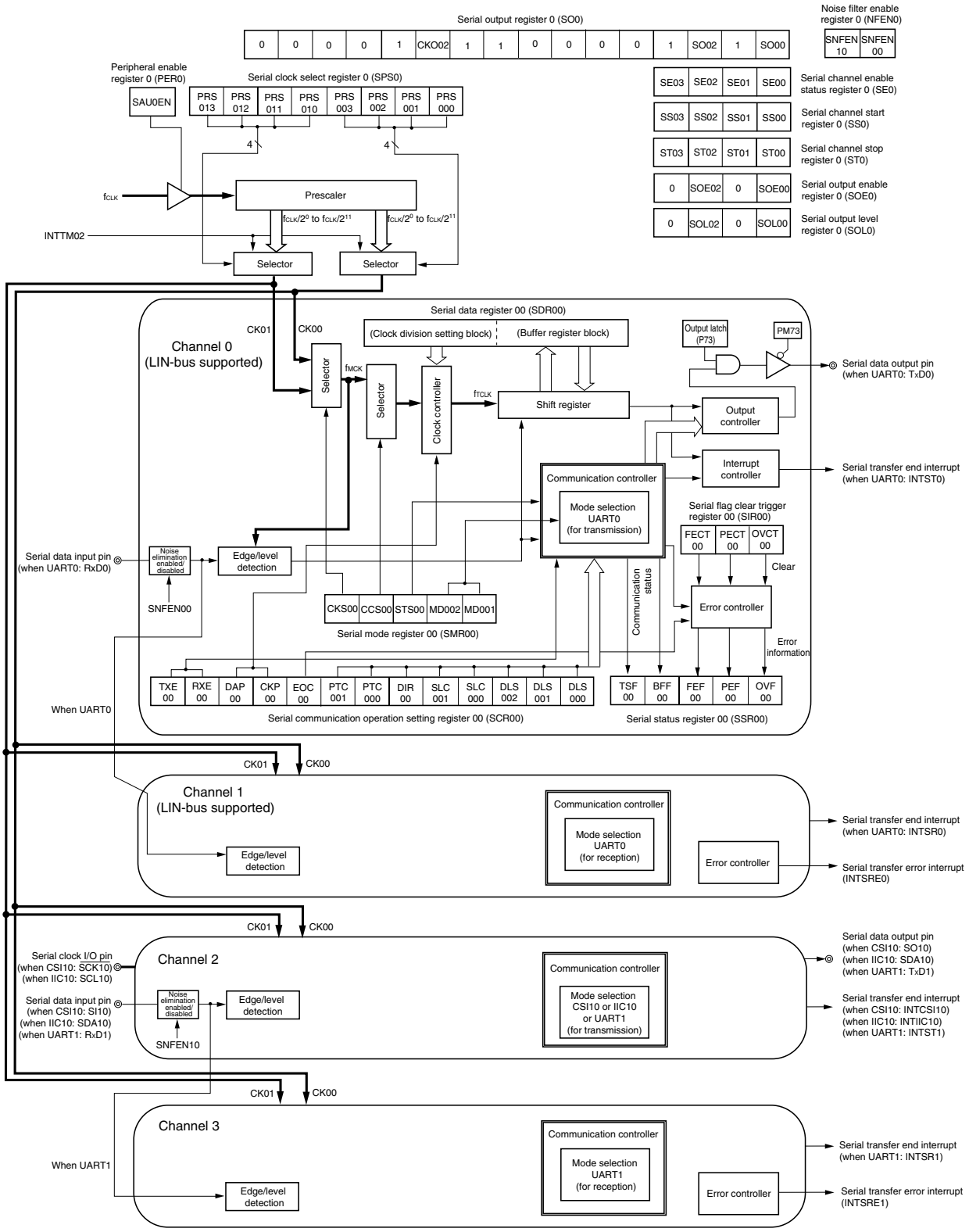

Figure 13-2. Block Diagram of Serial Array Unit (44-pin and 48-pin products of 78K0R/IC3, 78K0R/ID3 and 78K0R/IE3)

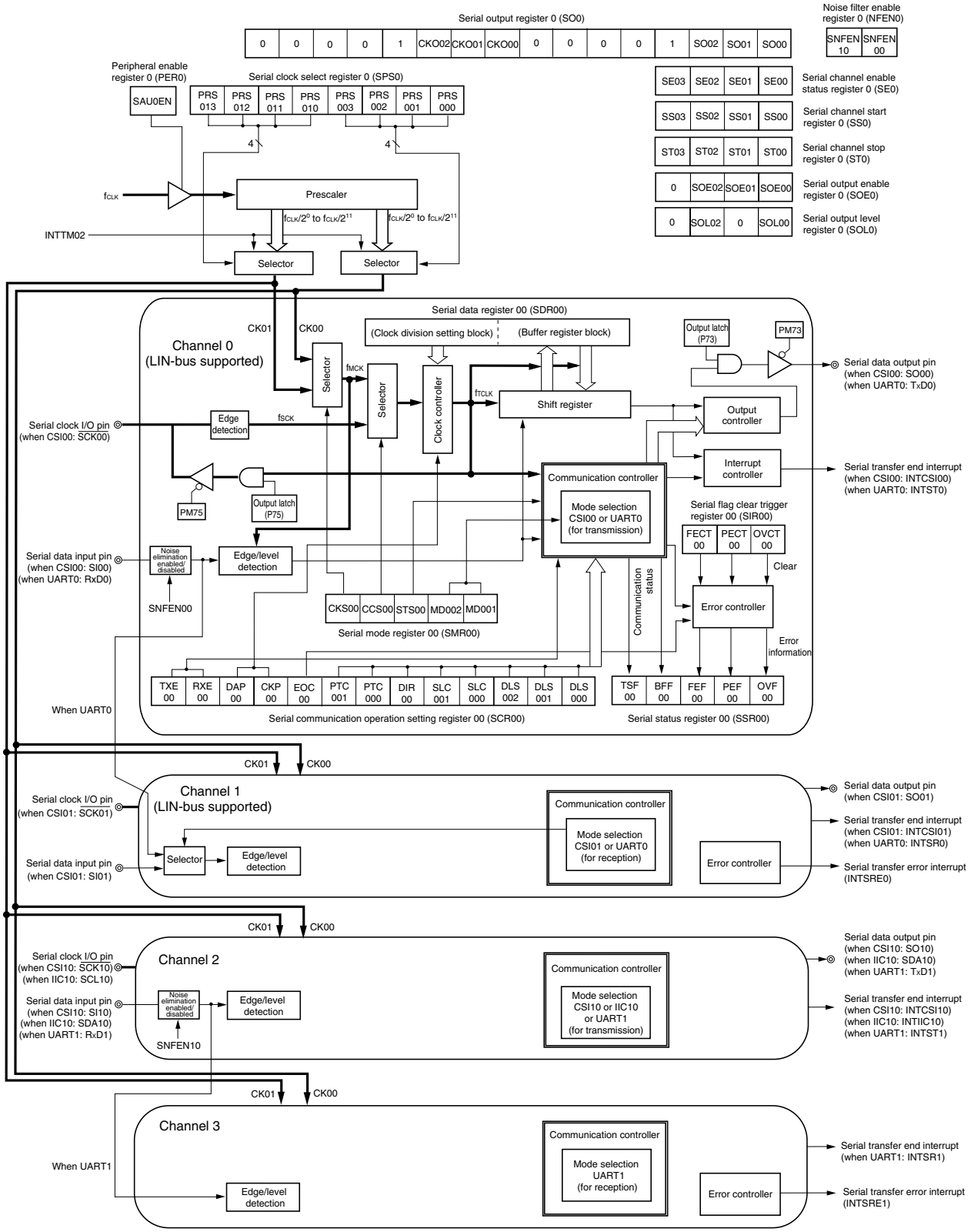

(1) Shift register

This is an 8-bit register that converts parallel data into serial data or vice versa.

During reception, it converts data input to the serial pin into parallel data.

When data is transmitted, the value set to this register is output as serial data from the serial output pin.

The shift register cannot be directly manipulated by program.

To read or write the shift register, use the lower 8 bits of serial data register 0n (SDR0n).

	7	6	5	4	3	2	1	0
Shift register								

(2) Lower 8 bits of the serial data register 0n (SDR0n)

SDR0n register is the transmit/receive data register (16 bits) of channel n. Bits 7 to 0 function as a transmit/receive buffer register, and bits 15 to 9 are used as a register that sets the division ratio of the operation clock (f_{MCK}).

When data is received, parallel data converted by the shift register is stored in the lower 8 bits. When data is to be transmitted, set transmit to be transferred to the shift register to the lower 8 bits.

The data stored in the lower 8 bits of this register is as follows, depending on the setting of bits 0 to 2 (DLS0n0 to DLS0n2) of the serial communication operation setting register 0n (SCR0n), regardless of the output sequence of the data.

- 5-bit data length (stored in bits 0 to 4 of SDR0n register) (settable in UART mode only)
- 7-bit data length (stored in bits 0 to 6 of SDR0n register)
- 8-bit data length (stored in bits 0 to 7 of SDR0n register)

SDR0n register can be read or written in 16-bit units.

The lower 8 bits of SDR0n register can be read or written[Note] as the following SFR, depending on the communication mode.

- CSIp communication … SIOp (CSIp data register)
- UARTq reception … RXDq (UARTq receive data register)
- UARTq transmission … TXDq (UARTq transmit data register)
- IIC10 communication … SIO10 (IIC10 data register)

Reset signal generation clears SDR0n register to 0000H.

Note Writing in 8-bit units is prohibited when the operation is stopped (SE0n = 0).

Remarks 1. After data is received, “0” is stored in bits 0 to 7 in bit portions that exceed the data length.

2. n: Channel number (n = 0 to 3),
p: CSI number (p = 10 (78K0R/IB3 and 38-pin products of 78K0R/IC3), p = 00, 01 and 10 (44-pin and 48-pin products of 78K0R/IC3, 78K0R/ID3 and 78K0R/IE3 only)),
q: UART number (q = 0, 1)

Figure 13-3. Format of Serial Data Register 0n (SDR0n)

Address: FFF10H, FFF11H (SDR00), FFF12H, FFF13H (SDR01), FFF44H, FFF45H (SDR02), FFF46H, FFF47H (SDR03) After reset: 0000H R/W

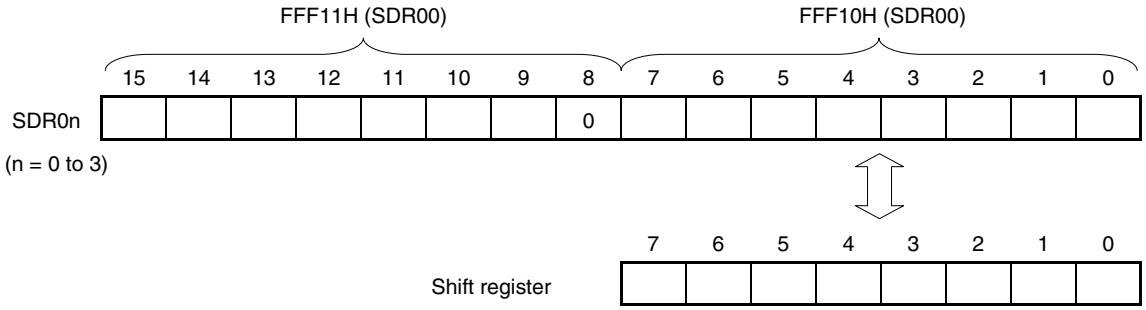

Caution Be sure to clear bit 8 to "0".

Remarks 1. For the function of the higher 7 bits of SDR0n register, see **13.3 Registers Controlling Serial Array Unit**.

2. n: Channel number (n = 0 to 3),

13.3 Registers Controlling Serial Array Unit

Serial array unit is controlled by the following registers.

- Peripheral enable register 0 (PER0)
- Serial clock select register 0 (SPS0)
- Serial mode register 0n (SMR0n)
- Serial communication operation setting register 0n (SCR0n)
- Serial data register 0n (SDR0n)
- Serial flag clear trigger register 0n (SIR0n)
- Serial status register 0n (SSR0n)
- Serial channel start register 0 (SS0)
- Serial channel stop register 0 (ST0)
- Serial channel enable status register 0 (SE0)
- Serial output enable register 0 (SOE0)
- Serial output level register 0 (SOL0)
- Serial output register 0 (SO0)
- Input switch control register (ISC)
- Noise filter enable register 0 (NFEN0)
- Port input mode registers 3, 7 (PIM3, PIM7) Note 1
- Port output mode registers 3, 7 (POM3, POM7) Note 1
- Port mode registers 1, 3, 7 (PM1, PM3, PM7) Note 2
- Port registers 1, 3, 7 (P1, P3, P7) Note 2

Notes 1. The PIM7 and POM7 registers are not provided in the 78K0R/IB3.

2. The PM1 and P1 registers are only provided in the 78K0R/IB3. The PM7 and P7 registers are not provided in the 78K0R/IB3.

Remark n: Channel number (n = 0 to 3)

(1) Peripheral enable register 0 (PER0)

PER0 is used to enable or disable supplying the clock to the peripheral hardware. Clock supply to a hardware macro that is not used is stopped in order to reduce the power consumption and noise.

When serial array unit is used, be sure to set bit 2 (SAU0EN) of this register to 1.

PER0 register can be set by a 1-bit or 8-bit memory manipulation instruction.

Reset signal generation clears PER0 register to 00H.

Figure 13-4. Format of Peripheral Enable Register 0 (PER0)

Address: F00F0H After reset: 00H R/W

Symbol	<7>	6	<5>	<4>	3	<2>	1	0
PER0	RTCEN Note 1	0	ADCEN	IICAEN Note 2	0	SAU0EN	0	0

SAU0EN	Control of serial array unit input clock supply
0	Stops supply of input clock. • SFR used by serial array unit cannot be written. • Serial array unit is in the reset status.
1	Enables input clock supply. • SFR used by serial array unit can be read/written.

Notes 1. RTCEN bit is not provided in the 78K0R/IB3. In the 78K0R/IB3, bit 7 of PER0 register is fixed to 0.

2. IICAEN bit is not provided in the 78K0R/IB3 and 38-pin and 44-pin products of the 78K0R/IC3. In the 78K0R/IB3 and 38-pin and 44-pin products of the 78K0R/IC3, bit 4 of PER0 register is fixed to 0.

Cautions 1. When setting serial array unit, be sure to set SAU0EN bit to 1 first. If SAU0EN = 0, writing to a control register of serial array unit is ignored, and, even if the register is read, only the default value is read (except for input switch control register (ISC), noise filter enable register (NFEN0), port input mode registers (PIM3, PIM7), port output mode registers (POM3, POM7), port mode registers (PM3, PM7), and port registers (P1, P3, P7)).

2. After setting bit 2 (SAU0EN) of the PER0 register to 1, be sure to set serial clock select register 0 (SPS0) after 4 or more f_{CLK} clocks have elapsed.

3. Be sure to clear bits 0, 1, 3, and 6 (78K0R/IB3 : Bits 0, 1, 3, 4, 6, 7, 38-pin and 44-pin products of 78K0R/IC3: 0, 1, 3, 4, 6) of PER0 register to 0.

(2) Serial clock select register 0 (SPS0)

SPS0 register is a 16-bit register that is used to select two types of operation clocks (CK00, CK01) that are commonly supplied to each channel. CK01 is selected by bits 7 to 4 of SPS0 register , and CK00 is selected by bits 3 to 0.

Rewriting SPS0 register is prohibited when the register is in operation (when SE0n = 1).

SPS0 register can be set by a 16-bit memory manipulation instruction.

The lower 8 bits of SPS0 register can be set with an 8-bit memory manipulation instruction with SPS0L.

Reset signal generation clears SPS0 register to 0000H.

Figure 13-5. Format of Serial Clock Select Register 0 (SPS0)

Address: F0126H, F0127H (SPS0), F0166H, F0167H (SPS1) After reset: 0000H R/W

Symbol	15	14	13	12	11	10	9	8	7	6	5	4	3	2	1	0
SPS0	0	0	0	0	0	0	0	0	PRS 013	PRS 012	PRS 011	PRS 010	PRS 003	PRS 002	PRS 001	PRS 000

PRS 0k3	PRS 0k2	PRS 0k1	PRS 0k0	Section of operation clock (CK0k) Note 1				
					f_{CLK} = 2 MHz	f_{CLK} = 5 MHz	f_{CLK} = 10 MHz	f_{CLK} = 20 MHz
0	0	0	0	f_{CLK}	2 MHz	5 MHz	10 MHz	20 MHz
0	0	0	1	$f_{CLK}/2$	1 MHz	2.5 MHz	5 MHz	10 MHz
0	0	1	0	$f_{CLK}/2^2$	500 kHz	1.25 MHz	2.5 MHz	5 MHz
0	0	1	1	$f_{CLK}/2^3$	250 kHz	625 kHz	1.25 MHz	2.5 MHz
0	1	0	0	$f_{CLK}/2^4$	125 kHz	313 kHz	625 kHz	1.25 MHz
0	1	0	1	$f_{CLK}/2^5$	62.5 kHz	156 kHz	313 kHz	625 kHz
0	1	1	0	$f_{CLK}/2^6$	31.3 kHz	78.1 kHz	156 kHz	313 kHz
0	1	1	1	$f_{CLK}/2^7$	15.6 kHz	39.1 kHz	78.1 kHz	156 kHz
1	0	0	0	$f_{CLK}/2^8$	7.81 kHz	19.5 kHz	39.1 kHz	78.1 kHz
1	0	0	1	$f_{CLK}/2^9$	3.91 kHz	9.77 kHz	19.5 kHz	39.1 kHz
1	0	1	0	$f_{CLK}/2^{10}$	1.95 kHz	4.88 kHz	9.77 kHz	19.5 kHz
1	0	1	1	$f_{CLK}/2^{11}$	977 Hz	2.44 kHz	4.88 kHz	9.77 kHz
1	1	1	1	INTTM02 Note 2				
Other than above				Setting prohibited				

Notes 1. When changing the clock selected for f_{CLK} (by changing the system clock control register (CKC) value), do so after having stopped (serial channel stop register 0 (ST0) = 000FH) the operation of the serial array unit (SAU). When selecting INTTM02 for the operation clock, also stop the timer array unit TAUS (timer channel stop register 0 (TT0) = 00FFH).

2. SAU can be operated at a fixed division ratio of the subsystem clock, regardless of the f_{CLK} frequency (main system clock, sub system clock), by operating the interval timer for which $f_{SUB}/4$ has been selected as the count clock (setting TIS02 bit of the timer input select register 0 (TIS0) to 1) and selecting INTTM02 by using the SPS0 register in channel 2 of TAUS. When changing f_{CLK}, however, SAU and TAUS must be stopped as described in Note 1 above.

Cautions 1. Be sure to clear bits 15 to 8 to "0".

2. After setting bit 2 (SAU0EN) of the PER0 register to 1, be sure to set serial clock select register 0 (SPS0) after 4 or more f_{CLK} clocks have elapsed.

Remarks 1. f_{CLK}: CPU/peripheral hardware clock frequency
f_{SUB}: Subsystem clock frequency

2. k = 0, 1

(3) Serial mode register 0n (SMR0n)

SMR0n register is a register that sets an operation mode of channel n. It is also used to select an operation clock (f_{MCK}), specify whether the serial clock (f_{SCK}) may be input or not, set a start trigger, an operation mode (CSI, UART, or I^2C), and an interrupt source. This register is also used to invert the level of the receive data only in the UART mode.

Rewriting SMR0n register is prohibited when the register is in operation (when SE0n = 1). However, the MD0n0 bit can be rewritten during operation.

SMR0n register can be set by a 16-bit memory manipulation instruction.

Reset signal generation sets SMR0n register to 0020H.

Figure 13-6. Format of Serial Mode Register 0n (SMR0n) (1/2)

Address: F0110H, F0111H (SMR00) to F0116H, F0117H (SMR03) After reset: 0020H R/W

Symbol	15	14	13	12	11	10	9	8	7	6	5	4	3	2	1	0
SMR0n	CKS 0n	CCS 0n	0	0	0	0	0	STS 0n	0	SIS 0n0	1	0	0	MD 0n2	MD 0n1	MD 0n0

CKS 0n	Selection of operation clock (f_{MCK}) of channel n
0	Prescaler output clock CK00 set by SPS0 register
1	Prescaler output clock CK01 set by SPS0 register
Operation clock (f_{MCK}) is used by the edge detector. In addition, depending on the setting of the CCS0n bit and the higher 7 bits of the SDR0n register, a transfer clock (f_{TCLK}) is generated.	

CCS 0n	Selection of transfer clock (f_{TCLK}) of channel n
0	Divided operation clock f_{MCK} specified by CKS0n bit
1	Clock input f_{SCK} from SCKp pin (slave transfer in CSI mode)
Transfer clock f_{TCLK} is used for the shift register, communication controller, output controller, interrupt controller, and error controller. When CCS0n = 0, the division ratio of operation clock (f_{MCK}) is set by the higher 7 bits of the SDR0n register.	

STS 0n	Selection of start trigger source
0	Only software trigger is valid (selected for CSI, UART transmission, and simplified I^2C).
1	Valid edge of RxDq pin (selected for UART reception)
Transfer is started when the above source is satisfied after 1 is set to the SS0 register.	

Caution Be sure to clear bits 13 to 9, 7, 4, and 3 to "0". Be sure to set bit 5 to "1".

Remark n: Channel number (n = 0 to 3), p: CSI number (p = 00, 01, 10), q: UART number (q = 0, 1)

Figure 13-6. Format of Serial Mode Register 0n (SMR0n) (2/2)

Address: F0110H, F0111H (SMR00) to F0116H, F0117H (SMR03) After reset: 0020H R/W

Symbol	15	14	13	12	11	10	9	8	7	6	5	4	3	2	1	0
SMR0n	CKS 0n	CCS 0n	0	0	0	0	0	STS 0n	0	SIS 0n0	1	0	0	MD 0n2	MD 0n1	MD 0n0

SIS 0n0	Controls inversion of level of receive data of channel n in UART mode
0	Falling edge is detected as the start bit. The input communication data is captured as is.
1	Rising edge is detected as the start bit. The input communication data is inverted and captured.

MD 0n2	MD 0n1	Setting of operation mode of channel n
0	0	CSI mode
0	1	UART mode
1	0	Simplified I^2C mode
1	1	Setting prohibited

MD 0n0	Selection of interrupt source of channel n
0	Transfer end interrupt
1	Buffer empty interrupt (Occurs when data is transferred from the SDR0n register to the shift register.)
For successive transmission, the next transmit data is written by setting MD0n0 bit to 1 when SDR0n data has run out.	

Caution Be sure to clear bits 13 to 9, 7, 4, and 3 to "0". Be sure to set bit 5 to "1".

Remark n: Channel number (n = 0 to 3)

(4) Serial communication operation setting register 0n (SCR0n)

SCR0n register is a communication operation setting register of channel n. It is used to set a data transmission/reception mode, phase of data and clock, whether an error signal is to be masked or not, parity bit, start bit, stop bit, and data length.

Rewriting SCR0n register is prohibited when the register is in operation (when SE0n = 1).

SCR0n register can be set by a 16-bit memory manipulation instruction.

Reset signal generation sets SCR0n register to 0087H.

Figure 13-7. Format of Serial Communication Operation Setting Register 0n (SCR0n) (1/2)

Address: F0118H, F0119H (SCR00) to F011EH, F011FH (SCR03) After reset: 0087H R/W

Symbol	15	14	13	12	11	10	9	8	7	6	5	4	3	2	1	0
SCR0n	TXE 0n	RXE 0n	DAP 0n	CKP 0n	0	EOC 0n	PTC 0n1	PTC 0n0	DIR 0n	0	SLC 0n1	SLC 0n0	0	DLS 0n2	DLS 0n1	DLS 0n0

TXE 0n	RXE 0n	Setting of operation mode of channel n
0	0	Disable communication.
0	1	Reception only
1	0	Transmission only
1	1	Transmission/reception

DAP 0n	CKP 0n	Selection of data and clock phase in CSI mode	Type
0	0	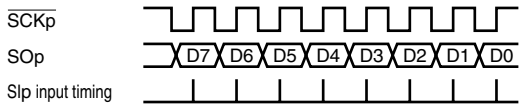	1
0	1	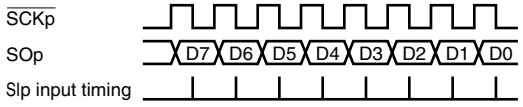	2
1	0	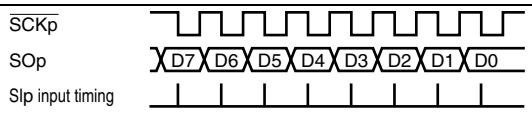	3
1	1	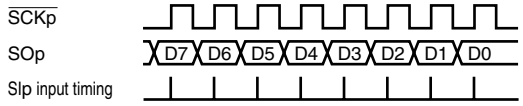	4
Be sure to set DAP0n, CKP0n = 0, 0 in the UART mode and simplified I^2C mode.			

EOC 0n	Selection of masking of error interrupt signal (INTSREx (x = 0 , 1))
0	Masks error interrupt INTSREx (INTSRx is not masked).
1	Enables generation of error interrupt INTSREx (INTSRx is masked if an error occurs).
Set EOC0n = 0 in the CSI mode, simplified I^2C mode, and during UART transmission[Note]. Set EOC0n = 1 during UART reception.	

Note When using CSI01 not with EOC01 = 0, error interrupt INTSRE0 may be generated.

Caution Be sure to clear bits 3, 6, and 11 to "0". Be sure to set bit 2 to "1".

Remark n: Channel number (n = 0 to 3),
p: CSI number (p = 10 (78K0R/IB3 and 38-pin products of 78K0R/IC3), p = 00, 01 and 10 (44-pin and 48-pin products of 78K0R/IC3, 78K0R/ID3, and 78K0R/IE3 only))

Figure 13-7. Format of Serial Communication Operation Setting Register 0n (SCR0n) (2/2)

Address: F0118H, F0119H (SCR00) to F011EH, F011FH (SCR03) After reset: 0087H R/W

Symbol	15	14	13	12	11	10	9	8	7	6	5	4	3	2	1	0
SCR0n	TXE 0n	RXE 0n	DAP 0n	CKP 0n	0	EOC 0n	PTC 0n1	PTC 0n0	DIR 0n	0	SLC 0n1	SLC 0n0	0	DLS 0n2	DLS 0n1	DLS 0n0

PTC 0n1	PTC 0n0	Setting of parity bit in UART mode	
		Transmission	Reception
0	0	Does not output the parity bit.	Receives without parity
0	1	Outputs 0 parity Note.	No parity judgment
1	0	Outputs even parity.	Judged as even parity.
1	1	Outputs odd parity.	Judges as odd parity.
Be sure to set PTC0n1, PTC0n0 = 0, 0 in the CSI mode and simplified I²C mode.			

DIR 0n	Selection of data transfer sequence in CSI and UART modes
0	Inputs/outputs data with MSB first.
1	Inputs/outputs data with LSB first.
Be sure to clear DIR0n = 0 in the simplified I²C mode.	

SLC 0n1	SLC 0n0	Setting of stop bit in UART mode
0	0	No stop bit
0	1	Stop bit length = 1 bit
1	0	Stop bit length = 2 bits
1	1	Setting prohibited
When the transfer end interrupt is selected, the interrupt is generated when all stop bits have been completely transferred. Set 1 bit (SLC0n1, SLC0n0 = 0, 1) during UART reception and in the simplified I²C mode. Set no stop bit (SLC0n1, SLC0n0 = 0, 0) in the CSI mode.		

DLS 0n2	DLS 0n1	DLS 0n0	Setting of data length in CSI and UART modes
1	0	0	5-bit data length (stored in bits 0 to 4 of SDR0n register) (settable in UART mode only)
1	1	0	7-bit data length (stored in bits 0 to 6 of SDR0n register)
1	1	1	8-bit data length (stored in bits 0 to 7 of SDR0n register)
Other than above			Setting prohibited
Be sure to set DLS0n0 = 1 in the simplified I²C mode.			

Note 0 is always added regardless of the data contents.

Caution Be sure to clear bits 3, 6, and 11 to "0". Be sure to set bit 2 to "1".

Remark n: Channel number (n = 0 to 3)

(5) Higher 7 bits of the serial data register 0n (SDR0n)

SDR0n register is the transmit/receive data register (16 bits) of channel n. Bits 7 to 0 function as a transmit/receive buffer register, and bits 15 to 9 are used as a register that sets the division ratio of the operation clock (f_{MCK}).

If the CCS0n bit of serial mode register 0n (SMR0n) is cleared to 0, the clock set by dividing the operating clock by the higher 7 bits of SDR0n register is used as the transfer clock.

The lower 8 bits of the SDR0n register function as a transmit/receive buffer register. During reception, the parallel data converted by the shift register is stored in the lower 8 bits, and during transmission, the data to be transmitted to the shift register is set to the lower 8 bits.

SDR0n register can be read or written in 16-bit units.

However, the higher 7 bits can be written or read only when the operation is stopped (SE0n = 0). During operation (SE0n = 1), a value is written only to the lower 8 bits of SDR0n register. When SDR0n register is read during operation, 0 is always read.

Reset signal generation clears SDR0n register to 0000H.

Figure 13-8. Format of Serial Data Register 0n (SDR0n)

Address: FFF10H, FFF11H (SDR00), FFF12H, FFF13H (SDR01), FFF44H, FFF45H (SDR02), FFF46H, FFF47H (SDR03) After reset: 0000H R/W

	FFF11H (SDR00)								FFF10H (SDR00)							
Symbol	15	14	13	12	11	10	9	8	7	6	5	4	3	2	1	0
SDR0n								0								

SDR0n[15:9]							Transfer clock setting by dividing the operating clock (f_{MCK})
0	0	0	0	0	0	0	$f_{MCK}/2$
0	0	0	0	0	0	1	$f_{MCK}/4$
0	0	0	0	0	1	0	$f_{MCK}/6$
0	0	0	0	0	1	1	$f_{MCK}/8$
• • •	• • •	• • •	• • •	• • •	• • •	• • •	• • •
1	1	1	1	1	1	0	$f_{MCK}/254$
1	1	1	1	1	1	1	$f_{MCK}/256$

Cautions 1. Be sure to clear bit 8 to "0".

2. Setting SDR0n[15:9] = (0000000B, 0000001B) is prohibited when UART is used.

3. Setting SDR0n[15:9] = 0000000B is prohibited when simplified I²C is used. Set SDR0n[15:9] to 0000001B or greater.

4. Do not write eight bits to the lower eight bits if operation is stopped (SEmn = 0). (If these bits are written to, the higher seven bits are cleared to 0.)

Remarks 1. For the function of the lower 8 bits of SDR0n register, see **13.2 Configuration of Serial Array Unit**.

2. n: Channel number (n = 0 to 3)

(6) Serial flag clear trigger register 0n (SIR0n)

SIR0n register is a trigger register that is used to clear each error flag of channel n.

When each bit (FECT0n, PECT0n, OVCT0n) of this register is set to 1, the corresponding bit (FEF0n, PEF0n, OVF0n) of serial status register 0n is cleared to 0. Because SIR0n register is a trigger register, it is cleared immediately when the corresponding bit of SSR0n register is cleared.

SIR0n register can be set by a 16-bit memory manipulation instruction.

The lower 8 bits of SIR0n register can be set with an 8-bit memory manipulation instruction with SIR0nL.

Reset signal generation clears SIR0n register to 0000H.

Figure 13-9. Format of Serial Flag Clear Trigger Register 0n (SIR0n)

Address: F0108H, F0109H (SIR00) to F010EH, F010FH (SIR03) After reset: 0000H R/W

Symbol	15	14	13	12	11	10	9	8	7	6	5	4	3	2	1	0
SIR0n	0	0	0	0	0	0	0	0	0	0	0	0	0	FECT0n	PECT0n	OVCT0n

FECT0n	Clear trigger of framing error of channel n
0	Not cleared
1	Clears the FEF0n bit of the SSR0n register to 0.

PECT0n	Clear trigger of parity error flag of channel n
0	Not cleared
1	Clears the PEF0n bit of the SSR0n register to 0.

OVCT0n	Clear trigger of overrun error flag of channel n
0	Not cleared
1	Clears the OVF0n bit of the SSR0n register to 0.

Caution Be sure to clear bits 15 to 3 to “0”.

Remarks 1. n: Channel number (n = 0 to 3)

2. When the SIR0n register is read, 0000H is always read.

(7) Serial status register 0n (SSR0n)

SSR0n register is a register that indicates the communication status and error occurrence status of channel n.
The errors indicated by this register are a framing error, parity error, and overrun error.
SSR0n register can be read by a 16-bit memory manipulation instruction.
The lower 8 bits of SSR0n register can be set with an 8-bit memory manipulation instruction with SSR0nL.
Reset signal generation clears SSR0n register to 0000H.

Figure 13-10. Format of Serial Status Register 0n (SSR0n) (1/2)

Address: F0100H, F0101H (SSR00) to F0106H, F0107H (SSR03) After reset: 0000H R

Symbol	15	14	13	12	11	10	9	8	7	6	5	4	3	2	1	0
SSR0n	0	0	0	0	0	0	0	0	0	TSF 0n	BFF 0n	0	0	FEF 0n	PEF 0n	OVF 0n

TSF 0n	Communication status indication flag of channel n
0	Communication is stopped or suspended.
1	Communication is in progress.

<Clear conditions>

- The ST0n bit of the ST0 register is set to 1 (communication is stopped) or the SS0n bit of the SS0 register is set to 1 (communication is suspended).
- Communication ends.

<Set condition>

- Communication starts.

BFF 0n	Buffer register status indication flag of channel n
0	Valid data is not stored in the SDR0n register.
1	Valid data is stored in the SDR0n register.

<Clear conditions>

- Transferring transmit data from the SDR0n register to the shift register ends during transmission.
- Reading receive data from the SDR0n register ends during reception.
- The ST0n bit of the ST0 register is set to 1 (communication is stopped) or the SS0n bit of the SS0 register is set to 1 (communication is enabled).

<Set conditions>

- Transmit data is written to the SDR0n register while the TXE0n bit of the SCR0n register is set to 1 (transmission or transmission and reception mode in each communication mode).
- Receive data is stored in the SDR0n register while the RXE0n bit of the SCR0n register is set to 1 (reception or transmission and reception mode in each communication mode).
- A reception error occurs.

Caution If data is written to the SDR0n register when BFF0n = 1, the transmit/receive data stored in the register is discarded and an overrun error (OVE0n = 1) is detected.

Remark n: Channel number (n = 0 to 3)

Figure 13-10. Format of Serial Status Register 0n (SSR0n) (2/2)

Address: F0100H, F0101H (SSR00) to F0106H, F0107H (SSR03) After reset: 0000H R

Symbol	15	14	13	12	11	10	9	8	7	6	5	4	3	2	1	0
SSR0n	0	0	0	0	0	0	0	0	0	TSF 0n	BFF 0n	0	0	FEF 0n	PEF 0n	OVF 0n

FEF 0n	Framing error detection flag of channel n
0	No error occurs.
1	An error occurs (during UART reception).

<Clear condition>
- 1 is written to the FECT0n bit of the SIR0n register.

<Set condition>
- A stop bit is not detected when UART reception ends.

PEF 0n	Parity error detection flag of channel n
0	No error occurs.
1	An error occurs (during UART reception) or ACK is not detected (during I^2C transmission).

<Clear condition>
- 1 is written to the PECT0n bit of the SIR0n register.

<Set condition>
- The parity of the transmit data and the parity bit do not match when UART reception ends (parity error).
- No ACK signal is returned from the slave channel at the ACK reception timing during I^2C transmission (ACK is not detected).

OVF 0n	Overrun error detection flag of channel n
0	No error occurs.
1	An error occurs

<Clear condition>
- 1 is written to the OVCT0n bit of the SIR0n register.

<Set condition>
- Even though receive data is stored in the SDR0n register, that data is not read and transmit data or the next receive data is written while the RXE0n bit of the SCR0n register is set to 1 (reception or transmission and reception mode in each communication mode).
- Transmit data is not ready for slave transmission or transmission and reception in CSI mode.

Remark n: Channel number (n = 0 to 3)

(8) Serial channel start register 0 (SS0)

SS0 register is a trigger register that is used to enable starting communication/count by each channel.

When 1 is written a bit of this register (SS0n), the corresponding bit (SE0n) of serial channel enable status register 0 (SE0) is set to 1 (Operation is enabled). Because SS0n bit is a trigger bit, it is cleared immediately when SE0n = 1.

SS0 register can be set by a 16-bit memory manipulation instruction.

The lower 8 bits of SS0 register can be set with an 1-bit or 8-bit memory manipulation instruction with SS0L.

Reset signal generation clears SS0 register to 0000H.

Figure 13-11. Format of Serial Channel Start Register 0 (SS0)

Address: F0122H, F0123H After reset: 0000H R/W

Symbol	15	14	13	12	11	10	9	8	7	6	5	4	3	2	1	0
SS0	0	0	0	0	0	0	0	0	0	0	0	0	SS03	SS02	SS01	SS00

SS0n	Operation start trigger of channel n
0	No trigger operation
1	Sets SE0n bit to 1 and enters the communication wait status[Note].

Note If a communication operation is already under execution, the operation is stopped.

Caution Be sure to clear bits 15 to 4 to "0".

Remarks 1. n: Channel number (n = 0 to 3)

2. When the SS0 register is read, 0000H is always read.

(9) Serial channel stop register 0 (ST0)

ST0 register is a trigger register that is used to enable stopping communication/count by each channel.

When 1 is written a bit of this register (ST0n), the corresponding bit (SE0n) of serial channel enable status register 0 (SE0) is cleared to 0 (operation is stopped). Because ST0n bit is a trigger bit, it is cleared immediately when SE0n = 0.

ST0 register can set written by a 16-bit memory manipulation instruction.

The lower 8 bits of ST0 register can be set with an 1-bit or 8-bit memory manipulation instruction with ST0L.

Reset signal generation clears ST0 register to 0000H.

Figure 13-12. Format of Serial Channel Stop Register 0 (ST0)

Address: F0124H, F0125H After reset: 0000H R/W

Symbol	15	14	13	12	11	10	9	8	7	6	5	4	3	2	1	0
ST0	0	0	0	0	0	0	0	0	0	0	0	0	ST03	ST02	ST01	ST00

ST0n	Operation stop trigger of channel n
0	No trigger operation
1	Clears SE0n bit to 0 and stops the communication operation[Note].

Note Communication stops while holding the value of the control register and shift register, and the status of the serial clock I/O pin, serial data output pin, and each error flag (FEF0n: framing error flag, PEF0n: parity error flag, OVF0n: overrun error flag).

Caution Be sure to clear bits 15 to 4 to "0".

Remarks 1. n: Channel number (n = 0 to 3)

2. When the ST0 register is read, 0000H is always read.

(10) Serial channel enable status register 0 (SE0)

SE0 register indicates whether data transmission/reception operation of each channel is enabled or stopped.

When 1 is written a bit of serial channel start register 0 (SS0), the corresponding bit of this register is set to 1.

When 1 is written a bit of serial channel stop register 0 (ST0), the corresponding bit is cleared to 0.

Channel n that is enabled to operate cannot rewrite by software the value of CKO0n bit (serial clock output of channel n) of the serial output register 0 (SO0) to be described below, and a value reflected by a communication operation is output from the serial clock pin.

Channel n that stops operation can set the value of CKO0n bit of the SO0 register by software and output its value from the serial clock pin. In this way, any waveform, such as that of a start condition/stop condition, can be created by software.

SE0 register can be read by a 16-bit memory manipulation instruction.

The lower 8 bits of SE0 register can be set with an 1-bit or 8-bit memory manipulation instruction with SE0L.

Reset signal generation clears SE0 register to 0000H.

Figure 13-13. Format of Serial Channel Enable Status Register 0 (SE0)

Address: F0120H, F0121H After reset: 0000H R

Symbol	15	14	13	12	11	10	9	8	7	6	5	4	3	2	1	0
SE0	0	0	0	0	0	0	0	0	0	0	0	0	SE03	SE02	SE01	SE00

SE0n	Indication of operation enable/stop status of channel n
0	Operation stops
1	Operation is enabled.

Remark n: Channel number (n = 0 to 3)

(11) Serial output enable register 0 (SOE0)

SOE0 register is a register that is used to enable or stop output of the serial communication operation of each channel.

Channel n that enables serial output cannot rewrite by software the value of SO0n bit of the serial output register 0 (SO0) to be described below, and a value reflected by a communication operation is output from the serial data output pin.

For channel n, whose serial output is stopped, the SO0n bit value of the SO0 register can be set by software, and that value can be output from the serial data output pin. In this way, any waveform of the start condition and stop condition can be created by software.

SOE0 register can be set by a 16-bit memory manipulation instruction.

The lower 8 bits of SOE0 register can be set with an 1-bit or 8-bit memory manipulation instruction with SOE0L.

Reset signal generation clears SOE0 register to 0000H.

Figure 13-14. Format of Serial Output Enable Register 0 (SOE0)

Address: F012AH, F012BH After reset: 0000H R/W

Symbol	15	14	13	12	11	10	9	8	7	6	5	4	3	2	1	0
SOE0	0	0	0	0	0	0	0	0	0	0	0	0	0	SOE02	SOE01 Note	SOE00

SOE0n	Serial output enable/stop of channel n
0	Stops output by serial communication operation.
1	Enables output by serial communication operation.

Note 44-pin and 48-pin products of 78K0R/IC3, 78K0R/ID3 and 78K0R/IE3 only

Caution Be sure to clear bits 15 to 3 (78K0R/IB3 and 38-pin products of 78K0R/IC3:Bits 15 to 3, 1) to "0".

Remark n: Channel number (n = 0 to 2)

(12) Serial output register 0 (SO0)

SO0 register is a buffer register for serial output of each channel.

The value of SO0n bit of this register is output from the serial data output pin of channel n.

The value of CKO0n bit of this register is output from the serial clock output pin of channel n.

SO0n bit of this register can be rewritten by software only when serial output is disabled (SOE0n = 0). When serial output is enabled (SOE0n = 1), rewriting by software is ignored, and the value of the register can be changed only by a serial communication operation.

CKO0n bit of this register can be rewritten by software only when the channel operation is stopped (SE0n = 0). While channel operation is enabled (SE0n = 1), rewriting by software is ignored, and the value of CKO0n bit can be changed only by a serial communication operation.

When using the the following pin as a port function pin, set the corresponding CKO0n and SO0n bits to “1”.

78K0R/IB3	P10/TI02/TO02/TxD0, P30/SO10/TxD1/TO11, P31/SI10/RxD1/SDA10/INTP1/TI09, P32/$\overline{\text{SCK10}}$/SCL10/INTP2
78K0R/IC3 (38-pin)	P30/SO10/TxD1/TO11, P31/SI10/RxD1/SDA10/INTP1/TI09, P32/$\overline{\text{SCK10}}$/SCL10/INTP2, P72/INTP6/RxD0, P73/TxD0/TO10
78K0R/IC3 (44-pin, 48-pin)	P30/SO10/TxD1/TO11, P31/SI10/RxD1/SDA10/INTP1/TI09, P32/$\overline{\text{SCK10}}$/SCL10/INTP2, P70/SO01/INTP4, P72/$\overline{\text{SCK01}}$/INTP6, P73/SO00/TxD0/TO10, P75/$\overline{\text{SCK00}}$/TI11
78K0R/ID3	P30/SO10/TxD1/TO11, P31/SI10/RxD1/SDA10/INTP1/TI09, P32/$\overline{\text{SCK10}}$/SCL10/INTP2, P70/SO01/INTP4, P72/$\overline{\text{SCK01}}$/INTP6, P73/SO00/TxD0/TO10, P75/$\overline{\text{SCK00}}$/TI11
78K0R/IE3	P30/SO10/TxD1/TO11, P31/SI10/RxD1/SDA10/INTP1, P32/$\overline{\text{SCK10}}$/SCL10/INTP2, P70/SO01/INTP4, P72/$\overline{\text{SCK01}}$/INTP6, P73/SO00/TxD0/TO10, P75/$\overline{\text{SCK00}}$/TI11

SO0 register can be set by a 16-bit memory manipulation instruction.

Reset signal generation clears SO0 register to 0F0FH.

Figure 13-15. Format of Serial Output Register 0 (SO0)

Address: F0128H, F0129H After reset: 0F0FH R/W

Symbol	15	14	13	12	11	10	9	8	7	6	5	4	3	2	1	0
SO0	0	0	0	0	1	CKO 02	CKO 01 Note	CKO 00 Note	0	0	0	0	1	SO 02	SO 01 Note	SO 00

CKO 0n	Serial clock output of channel n
0	Serial clock output value is “0”.
1	Serial clock output value is “1”.

SO 0n	Serial data output of channel n
0	Serial data output value is “0”.
1	Serial data output value is “1”.

Note 44-pin and 48-pin products of 78K0R/IC3, 78K0R/ID3, and 78K0R/IE3 only

Caution Be sure to set bits 11 and 3 (78K0R/IB3 and 38-pin products of 78K0R/IC3: Bits 11, 9, 8, 3, and 1) to “1”. And be sure to clear bits 15 to 12 and 7 to 4 to “0”.

Remark n: Channel number (n = 0 to 2)

(13) Serial output level register 0 (SOL0)

SOL0 register is a register that is used to set inversion of the data output level of each channel.

This register can be set only in the UART mode. Be sure to set 0000H in the CSI mode and simplifies I^2C mode.

Inverting channel n by using this register is reflected on pin output only when serial output is enabled (SOE0n = 1). When serial output is disabled (SOE0n = 0), the value of the SO0n bit is output as is.

Rewriting SOL0 register is prohibited when the register is in operation (when SE0n = 1).

SOL0 register can be set by a 16-bit memory manipulation instruction.

The lower 8 bits of SOL0 register can be set with an 8-bit memory manipulation instruction with SOL0L.

Reset signal generation clears SOL0 register to 0000H.

Figure 13-16. Format of Serial Output Level Register 0 (SOL0)

Address: F0134H, F0135H After reset: 0000H R/W

Symbol	15	14	13	12	11	10	9	8	7	6	5	4	3	2	1	0
SOL0	0	0	0	0	0	0	0	0	0	0	0	0	0	SOL02	0	SOL00

SOL0n	Selects inversion of the level of the transmit data of channel n in UART mode
0	Communication data is output as is.
1	Communication data is inverted and output.

Caution Be sure to clear bits 15 to 3, and 1 to "0".

Remark n: Channel number (n = 0, 2)

(14) Input switch control register (ISC)

The ISC1 and ISC0 bits of the ISC register are used to realize a LIN-bus communication operation by UART0 in coordination with an external interrupt and the timer array unit TAUS.

When bit 0 is set to 1, the input signal of the serial data input (RxD0) pin is selected as an external interrupt (INTP0) that can be used to detect a wakeup signal.

When bit 1 is set to 1, the input signal of the serial data input (RxD0) pin is selected as a timer input, so that wake up signal can be detected, the low width of the sync break field, and the pulse width of the sync field can be measured by the timer.

The ISC2 to ISC4 bits are set to select the P52/SLTI/SLTO pin as the timer I/O pin of timer channels 0, 1, and 8 to 11 (This bits are not provided in the 78K0R/IB3).

ISC register can be set by a 1-bit or 8-bit memory manipulation instruction.

Reset signal generation clears ISC register to 00H.

Figure 13-17. Format of Input Switch Control Register (ISC)

Address: FFF3CH After reset: 00H R/W

Symbol	7	6	5	4	3	2	1	0
ISC	0	0	0	ISC4	ISC3	ISC2	ISC1	ISC0

ISC4	ISC3	ISC2	Selecting P52/SLTI/SLTO Pin as Timer I/O Pin											
			Channel 0		Channel 1		Channel 8		Channel 9		Channel 10		Channel 11	
			Input pin	Output pin	Input pin	Output pin	Input pin	Output pin	Input pin	Output pin	Input pin	Output pin	Input pin	Output pin
0	0	0	P00/TI00	P01/TO00	P52/SLTI	P52 SLTO	P16/TI08	P16/TO08	P31/TI09 Note 2	P17/TO09	P74/TI10	P73/TO10	P75/TI11	P30/TO11
0	0	1	P52/SLTI	P52/SLTO	–	–	P16/TI08	P16/TO08	P31/TI09 Note 2	P17/TO09	P74/TI10	P73/TO10	P75/TI11	P30/TO11
0	1	0	P00/TI00	P01/TO00	–	–	P52/SLTI	P52/SLTO	P31/TI09 Note 2	P17/TO09	P74/TI10	P73/TO10	P75/TI11	P30/TO11
0	1	1	P00/TI00	P01/TO00	–	–	P16/TI08	P16/TO08	P52/SLTI	P52/SLTO	P74/TI10	P73/TO10	P75/TI11	P30/TO11
1	0	0	P00/TI00	P01/TO00	–	–	P16/TI08	P16/TO08	P31/TI09 Note 2	P17/TO09	P52/SLTI	P52/SLTO	P75/TI11	P30/TO11
1	0	1	P00/TI00	P01/TO00	–	–	P16/TI08	P16/TO08	P31/TI09 Note 2	P17/TO09	P74/TI10	P73/TO10	P52/SLTI	P52/SLTO
Other than the above			Setting prohibited											

ISC1	Switching channel 7 input of timer array unit TAUS
0	Uses the input signal of the TI07 pin as a timer input (normal operation).
1	Input signal of RxD0 pin is used as timer input (detects the wakeup signal and measures the low width of the sync break field and the pulse width of the sync field).

ISC0	Switching external interrupt (INTP0) input
0	Uses the input signal of the INTP0 pin as an external interrupt (normal operation).
1	Uses the input signal of the RxD0 pin as an external interrupt (detects the wakeup signal).

(Note and **Caution** are listed on the next page.**)**

Notes **1.** ISC2 to ISC4 bits are not provided in the 78K0R/IB3. In the 78K0R/IB3, these bits are fixed to 0.
2. 78K0R/IE3: P17/TI09

Caution Be sure to clear bits 7 to 5 to "0".

Remark The presence or absence of channel 0, 1 and 8 to 11 of timer I/O pins in each timer array unit channel depends on the product. For details, see Table 6-1 Timer I/O Pins Included in Each Product or Tables 6-3 to 6-5 I/O Pins That Can Be Selected for Channels 0, 1, and 8 to 11. For products that do not provide timer I/O pins for channels 0, 1, and 8 to 11, only the P52/SLTI/SLTO pin can be selected as a timer I/O pin.

(15) Noise filter enable register 0 (NFEN0)

NFEN0 register is used to set whether the noise filter can be used for the input signal from the serial data input pin to each channel.

Disable the noise filter of the pin used for CSI or simplified I^2C communication, by clearing the corresponding bit of this register to 0.

Enable the noise filter of the pin used for UART communication, by setting the corresponding bit of this register to 1.

When the noise filter is enabled, Operation clock (f_{MCK}) is synchronized with 2-clock match detection.

NFEN0 register can be set by a 1-bit or 8-bit memory manipulation instruction.

Reset signal generation clears NFEN0 register to 00H.

Figure 13-18. Format of Noise Filter Enable Register 0 (NFEN0)

Address: F0060H After reset: 00H R/W

Symbol	7	6	5	4	3	2	1	0
NFEN0	0	0	0	0	0	SNFEN10	0	SNFEN00

SNFEN10	Use of noise filter of the following pin 78K0R/IB3, 78K0R/IC3, 78K0R/ID3 RxD1/SDA10/SI10/INTP1/TI09/P31 pin 78K0R/IE3 RxD1/SDA10/SI10/INTP1/P31 pin
0	Noise filter OFF
1	Noise filter ON
Set SNFEN10 bit to 1 to use the RxD1 pin. Clear SNFEN10 bit to 0 to use the alternate pins other than RxD1 pin or port function.	

SNFEN00	Use of noise filter of the following pin 78K0R/IB3 RxD0/TI03/TO03/P11 pin 78K0R/IC3(38-pin) RxD0/INTP6/P72 pin 78K0R/IC3(44-pin, 48pin), 78K0R/ID3, 78K0R/IE3 RxD0/SI00/TI10/P74 pin
0	Noise filter OFF
1	Noise filter ON
Set SNFEN00 bit to 1 to use the RxD0 pin. Clear SNFEN00 bit to 0 to use the alternate pins other than RxD0 pin or port function.	

Caution Be sure to clear bits 7 to 3, and 1 to "0".

(16) Port input mode registers 3, 7 (PIM3, PIM7) [Note 1]

These registers set the input buffer of ports 3 and 7 in 1-bit units.

PIM3 and PIM7 registers can be set by a 1-bit or 8-bit memory manipulation instruction.

Reset signal generation clears PIM3 and PIM7 registers to 00H.

Figure 13-19. Format of Port Input Mode Registers 3 and 7 (PIM3 and PIM7)

Address F0043H After reset: 00H R/W

Symbol	7	6	5	4	3	2	1	0
PIM3	0	0	0	0	0	PIM32	PIM31	0

Address F0047H After reset: 00H R/W

Symbol	7	6	5	4	3	2	1	0
PIM7	0	0	PIM75 [Note 2]	PIM74 [Note 2]	0	PIM72	PIM71 [Note 2]	0

PIMmn	Pmn pin input buffer selection (m = 3, 7; n = 1, 2, 4, 5)
0	Normal input buffer
1	TTL input buffer

Notes 1. PIM7 register is not provided in the 78K0R/IB3.
2. PIM71, PIM74, and PIM75 registers are not provided in the 38-pin products of the 78K0R/IC3.

(17) Port output mode registers 3, 7 (POM3, POM7) [Note 1]

These registers set the output mode of ports 3 and 7 in 1-bit units.

POM3 and POM7 registers can be set by a 1-bit or 8-bit memory manipulation instruction.

Reset signal generation clears POM3 and POM7 registers to 00H.

Figure 13-20. Format of Port Output Mode Registers 3 and 7 (POM3 and POM7)

Address F0053H After reset: 00H R/W

Symbol	7	6	5	4	3	2	1	0
POM3	0	0	0	0	0	POM32	POM31	POM30

Address F0057H After reset: 00H R/W

Symbol	7	6	5	4	3	2	1	0
POM7	0	0	POM75 [Note 2]	0	POM73	POM72 [Note 2]	0	POM70 [Note 2]

POMmn	Pmn pin output buffer selection (m = 3, 7; n = 0 to 3, 5)
0	Normal output mode
1	N-ch open-drain output (V_{DD} tolerance) mode

Notes 1. POM7 register is not provided in the 78K0R/IB3.
2. POM70, POM72, and POM75 registers are not provided in the 38-pin products of the 78K0R/IC3.

(18) Port mode registers 1, 3, 7 (PM1, PM3, PM7)

These registers set input/output of ports 1[Note], 3, and 7 in 1-bit units.

When using the ports (such as P30/SO10/TxD1/TO11, P32/$\overline{\text{SCK10}}$/SCL10/INTP2) to be shared with the serial data output or serial clock output pin for serial data output or serial clock output , set bit of the port mode register (PMxx) to 0 and bit of port register (Pxx) to 1.

Example: When using P30/SO10/TxD1/TO11 for serial data output
Set the PM30 bit of port mode register 3 to 0.
Set the P30 bit of port register 3 to 0.

When using the ports (such as P71/SI01/INTP5, P72/$\overline{\text{SCK01}}$/INTP6) to be shared with the serial data input or serial clock input pin for serial data input or serial clock input , set bit of the port mode register (PMxx) to 1. The bit of the port register (Pxx) at this time may be 0 or 1.

Example: When using P71/SI01/INTP5 for serial data input
Set the PM71 bit of port mode register 7 to 1.
Set the P71 bit of port register 7 to 0 or 1.

PM1, PM3, and PM7[Note] can be set by a 1-bit or 8-bit memory manipulation instruction.

Reset signal generation sets these registers to FFH.

Note The PM1 and P1 registers are only provided in the 78K0R/IB3. The PM7 and P7 registers are not provided in the 78K0R/IB3.

Figure 13-21. Format of Port Mode Registers 3 and 7 (PM3 and PM7) (78K0R/IE3)

Address: FFF23H After reset: FFH R/W

Symbol	7	6	5	4	3	2	1	0
PM3	1	1	1	1	1	PM32	PM31	PM30

Address: FFF27H After reset: FFH R/W

Symbol	7	6	5	4	3	2	1	0
PM7	1	1	PM75	PM74	PM73	PM72	PM71	PM70

PMmn	Pmn pin I/O mode selection (m = 3, 7; n = 0 to 5)
0	Output mode (output buffer on)
1	Input mode (output buffer off)

Remark The figure shown above presents the format of port mode register 3 and 7 of the 78K0R/IE3 products. For the format of port mode register of other products, see **4.3 (1) Port mode registers (PMxx)**.

13.4 Operation stop mode

Each serial interface of serial array unit has the operation stop mode.
In this mode, serial communication cannot be executed, thus reducing the power consumption.
In addition, the following pins can be used as port function pins in this mode.

78K0R/IB3	P10/TI02/TO02/TxD0,P11/TI03/TO03/RxD0, P30/SO10/TxD1/TO11, P31/SI10/RxD1/SDA10/INTP1/TI09, P32/$\overline{\text{SCK10}}$/SCL10/INTP2
38-pin products of 78K0R/IC3	P30/SO10/TxD1/TO11, P31/SI10/RxD1/SDA10/INTP1/TI09, P32/$\overline{\text{SCK10}}$/SCL10/INTP2, P72/INTP6/RxD0, P73/TxD0/TO10
78K0R/IC3 (44-pin, 48-pin)	P30/SO10/TxD1/TO11, P31/SI10/RxD1/SDA10/INTP1/TI09, P32/$\overline{\text{SCK10}}$/SCL10/INTP2, P70/SO01/INTP4, P71/SI01/INTP5, P72/SCK01/INTP6, P73/SO00/TxD0/TO10, P74/SI00/RxD0/TI10, P75/$\overline{\text{SCK00}}$/TI11
78K0R/ID3	P30/SO10/TxD1/TO11, P31/SI10/RxD1/SDA10/INTP1/TI09, P32/$\overline{\text{SCK10}}$/SCL10/INTP2, P70/SO01/INTP4, P71/SI01/INTP5, P72/$\overline{\text{SCK01}}$/INTP6, P73/SO00/TxD0/TO10, P74/SI00/RxD0/TI10, P75/$\overline{\text{SCK00}}$/TI11
78K0R/IE3	P30/SO10/TxD1/TO11, P31/SI10/RxD1/SDA10/INTP1, P32/$\overline{\text{SCK10}}$/SCL10/INTP2, P70/SO01/INTP4, P71/SI01/INTP5, P72/$\overline{\text{SCK01}}$/INTP6, P73/SO00/TxD0/TO10, P74/SI00/RxD0/TI10, P75/$\overline{\text{SCK00}}$/TI11

13.4.1 Stopping the operation by units

The stopping of the operation by units is set by using peripheral enable register 0 (PER0).

PER0 register is used to enable or disable supplying the clock to the peripheral hardware. Clock supply to a hardware macro that is not used is stopped in order to reduce the power consumption and noise.

To stop the operation of serial array unit, set bit 2 (SAU0EN) to 0.

Figure 13-22. Peripheral Enable Register 0 (PER0) Setting When Stopping the Operation by Units

(a) Peripheral enable register 0 (PER0)

	7	6	5	4	3	2	1	0
PER0	RTCEN Note 1		ADCEN	IICAEN Note 2		SAU0EN		
	×	0	×	×	0	0/1	0	0

Control of SAU input clock
0: Stops input clock supply
1: Enables input clock supply

Notes 1. RTCEN bit is not provided in the 78K0R/IB3. In the 78K0R/IB3, bit7 of PER0 register is fixed to 0.
2. IICAEN bit is not provided in the 78K0R/IB3 and the 38-pin and 44-pin of the 78K0R/IC3. In the 78K0R/IB3 and the 38-pin and 44-pin of the 78K0R/IC3, bit4 of PER0 register is fixed to 0.

Cautions 1. If SAU0EN = 0, writing to a control register of serial array unit is ignored, and, even if the register is read, only the default value is read (except for input switch control register (ISC), noise filter enable register (NFEN0), port input mode registers (PIM3, PIM7), port output mode registers (POM3, POM7), port mode registers (PM3, PM7), and port registers (P3, P7)).
2. Be sure to clear bits 0, 1, 3, and 6(78K0R/IB3: Bits 0, 1, 3, 4, 6, and 7 and 38-pin and 44-pin products of 78K0R/IC3: Bits 0, 1, 3, 4, and 6) of PER0 register to 0.

Remark ▒: Setting disabled (fixed by hardware)
×: Bits not used with serial array units (depending on the settings of other peripheral functions)
0/1: Set to 0 or 1 depending on the usage of the user

13.4.2 Stopping the operation by channels

The stopping of the operation by channels is set using each of the following registers.

Figure 13-23. Each Register Setting When Stopping the Operation by Channels

(a) Serial channel stop register 0 (ST0) … This register is a trigger register that is used to enable stopping communication/count by each channel.

	15	14	13	12	11	10	9	8	7	6	5	4	3	2	1	0
ST0	0	0	0	0	0	0	0	0	0	0	0	0	ST03 0/1	ST02 0/1	ST01 0/1	ST00 0/1

1: Clears SE0n bit to 0 and stops the communication operation

* Because ST0n bit is a trigger bit, it is cleared immediately when SE0n = 0.

(b) Serial Channel Enable Status Register 0 (SE0) … This register indicates whether data transmission/reception operation of each channel is enabled or stopped.

	15	14	13	12	11	10	9	8	7	6	5	4	3	2	1	0
SE0	0	0	0	0	0	0	0	0	0	0	0	0	SE03 0/1	SE02 0/1	SE01 0/1	SE00 0/1

0: Operation stops

* The SE0 register is a read-only status register, whose operation is stopped by using the ST0 register.
With a channel whose operation is stopped, the value of CKO0n bit of the SO0 register can be set by software.

(c) Serial output enable register 0 (SOE0) … This register is a register that is used to enable or stop output of the serial communication operation of each channel.

	15	14	13	12	11	10	9	8	7	6	5	4	3	2	1	0
SOE0	0	0	0	0	0	0	0	0	0	0	0	0	0	SOE02 0/1	SOE01 0/1 Note	SOE00 0/1

0: Stops output by serial communication operation

* For channel n, whose serial output is stopped, the SO0n bit value of the SO0 register can be set by software.

(d) Serial output register 0 (SO0) …This register is a buffer register for serial output of each channel.

	15	14	13	12	11	10	9	8	7	6	5	4	3	2	1	0
SO0	0	0	0	0	1	CKO02 0/1	CKO01 0/1 Note	CKO00 0/1 Note	0	0	0	0	1	SO02 0/1	SO01 0/1 Note	SO00 0/1

1: Serial clock output value is “1” 1: Serial data output value is “1”

* When using pins corresponding to each channel as port function pins, set the corresponding CKO0n and SO0n bits to “1”.

Note 44-pin and 48-pin of 78K0R/IC3, 78K0R/ID3, and 78K0R/IE3 only

Remark n: Channel number (n = 0 to 3)

▒ : Setting disabled (fixed by hardware), 0/1: Set to 0 or 1 depending on the usage of the user

13.5 Operation of 3-Wire Serial I/O (CSI00, CSI01, CSI10) Communication

This is a clocked communication function that uses three lines: serial clock (SCK) and serial data (SI and SO) lines.

[Data transmission/reception]

- Data length of 7 or 8 bits
- Phase control of transmit/receive data
- MSB/LSB first selectable
- Level setting of transmit/receive data

[Clock control]

- Master/slave selection
- Phase control of I/O clock
- Setting of transfer period by prescaler and internal counter of each channel
- Maximum transfer rate
  During master communication: Max. $f_{CLK}/4$, during slave communication: Max. $f_{MCK}/6$ Note

[Interrupt function]

- Transfer end interrupt/buffer empty interrupt

[Error detection flag]

- Overrun error

Note Use the clocks within a range satisfying the $\overline{SCK}$ cycle time (t_{KCY}) characteristics (see **CHAPTER 28 ELECTRICAL SPECIFICATIONS**).

The channels supporting 3-wire serial I/O (CSI00 Note, CSI01 Note, CSI10) are channels 0 to 2 of SAU.

Channel	Used as CSI	Used as UART	Used as Simplified I^2C
0	CSI00 Note	UART0 (supporting LIN-bus)	–
1	CSI01 Note		–
2	CSI10	UART1	IIC10
3	–		–

3-wire serial I/O (CSI00 Note, CSI01 Note, CSI10) performs the following six types of communication operations.

- Master transmission (See **13.5.1**.)
- Master reception (See **13.5.2**.)
- Master transmission/reception (See **13.5.3**.)
- Slave transmission (See **13.5.4**.)
- Slave reception (See **13.5.5**.)
- Slave transmission/reception (See **13.5.6**.)

Note CSI00 and CSI01 are only available in the 44-pin and 48-pin products of the 78K0R/IC3 and in the 78K0R/ID3 and 78K0R/IE3.

13.5.1 Master transmission

Master transmission is that the 78K0R/Ix3 outputs a transfer clock and transmits data to another device.

3-Wire Serial I/O	CSI00 [Note 1]	CSI01 [Note 1]	CSI10
Target channel	Channel 0 of SAU	Channel 1 of SAU	Channel 2 of SAU
Pins used	SCK00, SO00	SCK01, SO01	SCK10, SO10
Interrupt	INTCSI00	INTCSI01	INTCSI10
	Transfer end interrupt (in single-transfer mode) or buffer empty interrupt (in continuous transfer mode) can be selected.		
Error detection flag	None		
Transfer data length	7 or 8 bits		
Transfer rate	Max. $f_{CLK}/4$ [Hz], Min. $f_{CLK}/(2 \times 2^{11} \times 128)$ [Hz] [Note 2] f_{CLK}: System clock frequency		
Data phase	Selectable by DAP0n bit of SCR0n register • DAP0n = 0: Data output starts from the start of the operation of the serial clock. • DAP0n = 1: Data output starts half a clock before the start of the serial clock operation.		
Clock phase	Selectable by CKP0n bit of SCR0n register • CKP0n = 0: Forward • CKP0n = 1: Reverse		
Data direction	MSB or LSB first		

Notes **1.** CSI00 and CSI01 are only available in the 44-pin and 48-pin products of the 78K0R/IC3 and in the 78K0R/ID3 and 78K0R/IE3.

2. Use this operation within a range that satisfies the conditions above and the AC characteristics in the electrical specifications (see **CHAPTER 28 ELECTRICAL SPECIFICATIONS**).

Remark n: Channel number (n = 2 (78K0R/IB3 and 38-pin products of 78K0R/IC3), n = 0 to 2 (44-pin and 48-pin products of 78K0R/IC3, 78K0R/ID3, and 78K0R/IE3))

(1) Register setting

Figure 13-24. Example of Contents of Registers for Master Transmission of 3-Wire Serial I/O (CSI00 Note, CSI01 Note, CSI10) (1/2)

(a) Serial mode register 0n (SMR0n)

	15	14	13	12	11	10	9	8	7	6	5	4	3	2	1	0
SMR0n	CKS0n 0/1	CCS0n 0	0	0	0	0	0	STS0n 0	0	SIS0n0 0	1	0	0	MD0n2 0	MD0n1 0	MD0n0 0/1

Operation clock (f_{MCK}) of channel n
0: Prescaler output clock CK00 set by SPS0 register
1: Prescaler output clock CK01 set by SPS0 register

Interrupt source of channel n
0: Transfer end interrupt
1: Buffer empty interrupt

(b) Serial communication operation setting register 0n (SCR0n)

	15	14	13	12	11	10	9	8	7	6	5	4	3	2	1	0
SCR0n	TXE0n 1	RXE0n 0	DAP0n 0/1	CKP0n 0/1	0	EOC0n 0	PTC0n1 0	PTC0n0 0	DIR0n 0/1	0	SLC0n1 0	SLC0n0 0	0	DLS0n2 1	DLS0n1 1	DLS0n0 0/1

Selection of the data and clock phase (For details about the setting, see **13.3 Registers Controlling Serial Array Unit**.)

Selection of data transfer sequence
0: Inputs/outputs data with MSB first
1: Inputs/outputs data with LSB first.

Setting of data length
0: 7-bit data length
1: 8-bit data length

(c) Serial data register 0n (SDR0n) (lower 8 bits: SIOp)

	15	14	13	12	11	10	9	8	7	6	5	4	3	2	1	0
SDR0n	Baud rate setting (Operation clock (f_{MCK}) division setting)							0	Transmit data (Transmit data setting)							

SIOp

(d) Serial output register 0 (SO0) … Sets only the bits of the target channel.

	15	14	13	12	11	10	9	8	7	6	5	4	3	2	1	0
SO0	0	0	0	0	1	CKO02 0/1	CKO01 0/1 Note	CKO00 0/1 Note	0	0	0	0	1	SO02 0/1	SO01 0/1 Note	SO00 0/1

Communication starts when these bits are 1 if the clock phase is forward (the CKP0n bit of the SCR0n register = 0). If the clock phase is reversed (CKP0n bit = 1), communication starts when these bits are 0.

Note CSI00 and CSI01 are only available in the 44-pin and 48-pin products of the 78K0R/IC3 and in the 78K0R/ID3 and 78K0R/IE3.

Remark n: Channel number (n = 0 to 2) (n = 2 (78K0R/IB3 and 38-pin products of 78K0R/IC3), n = 0 to 2 (44-pin and 48-pin products of 78K0R/IC3, 78K0R/ID3, and 78K0R/IE3)
p: CSI number (p = 00, 01, 10) (p = 10(78K0R/IB3 and 38-pin products of 78K0R/IC3), p = 00, 01, 10(44-pin and 48-pin products of 78K0R/IC3, 78K0R/ID3, and 78K0R/IE3)
□ : Setting is fixed in the CSI master transmission mode, ▒ : Setting disabled (set to the initial value)
0/1: Set to 0 or 1 depending on the usage of the user

Figure 12-24. Example of Contents of Registers for Master Transmission of 3-Wire Serial I/O (CSI00 Note, CSI01 Note, CSI10) (2/2)

(e) Serial output enable register 0 (SOE0) … Sets only the bits of the target channel to 1.

	15	14	13	12	11	10	9	8	7	6	5	4	3	2	1	0
SOE0	0	0	0	0	0	0	0	0	0	0	0	0	0	SOE02 0/1	SOE01 0/1 Note	SOE00 0/1

(f) Serial channel start register 0 (SS0) … Sets only the bits of the target channel to 1.

	15	14	13	12	11	10	9	8	7	6	5	4	3	2	1	0
SS0	0	0	0	0	0	0	0	0	0	0	0	0	SS03 ×	SS02 0/1	SS01 0/1	SS00 0/1

Note CSI00 and CSI01 are only available in the 44-pin and 48-pin products of the 78K0R/IC3 and in the 78K0R/ID3 and 78K0R/IE3.

Remark ▒: Setting disabled (set to the initial value)
×: Bit that cannot be used in this mode (set to the initial value when not used in any mode)
0/1: Set to 0 or 1 depending on the usage of the user

(2) Operation procedure

Figure 13-25. Initial Setting Procedure for Master Transmission

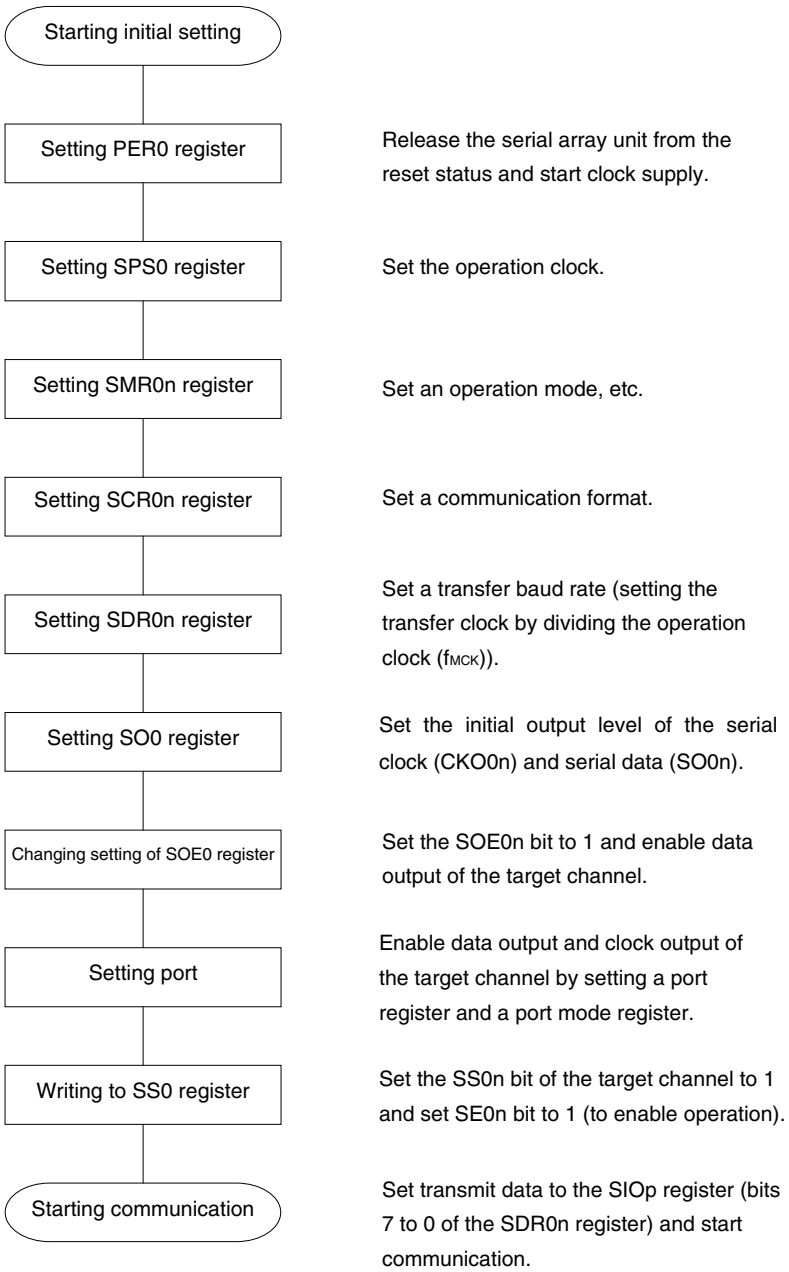

Caution After setting the SAU0EN bit of peripheral enable register 0 (PER0) to 1, be sure to set serial clock select register 0 (SPS0) after 4 or more f_{CLK} clocks have elapsed.

Figure 13-26. Procedure for Stopping Master Transmission

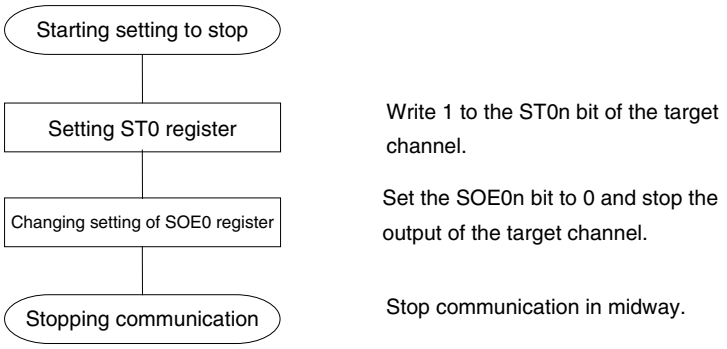

Remark Even after communication is stopped, the pin level is retained. To resume the operation, re-set the serial output register 0 (SO0) (see **Figure 13-27 Procedure for Resuming Master Transmission**).

Figure 13-27. Procedure for Resuming Master Transmission

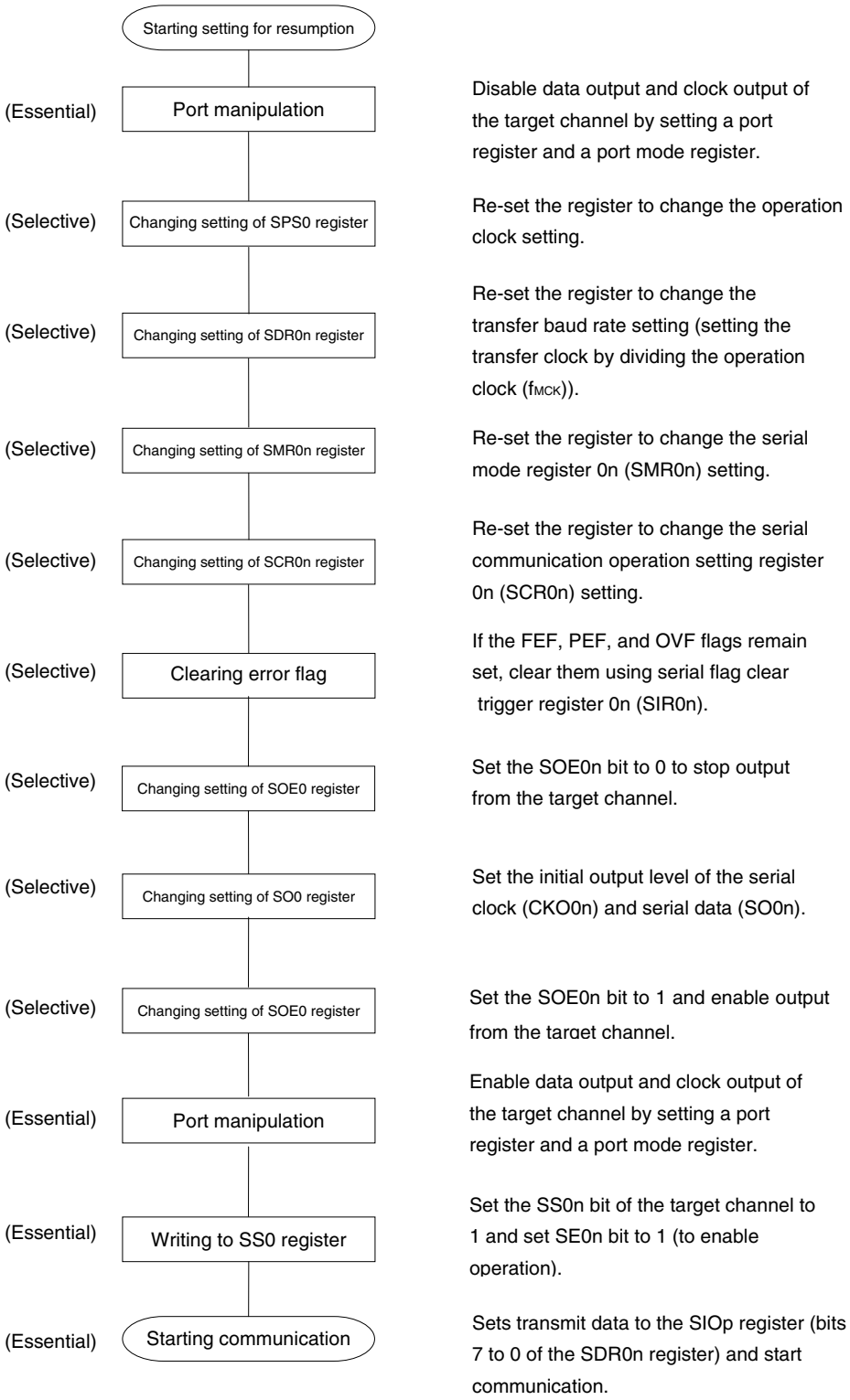

(3) Processing flow (in single-transmission mode)

Figure 13-28. Timing Chart of Master Transmission (in Single-Transmission Mode)
(Type 1: DAP0n = 0, CKP0n = 0)

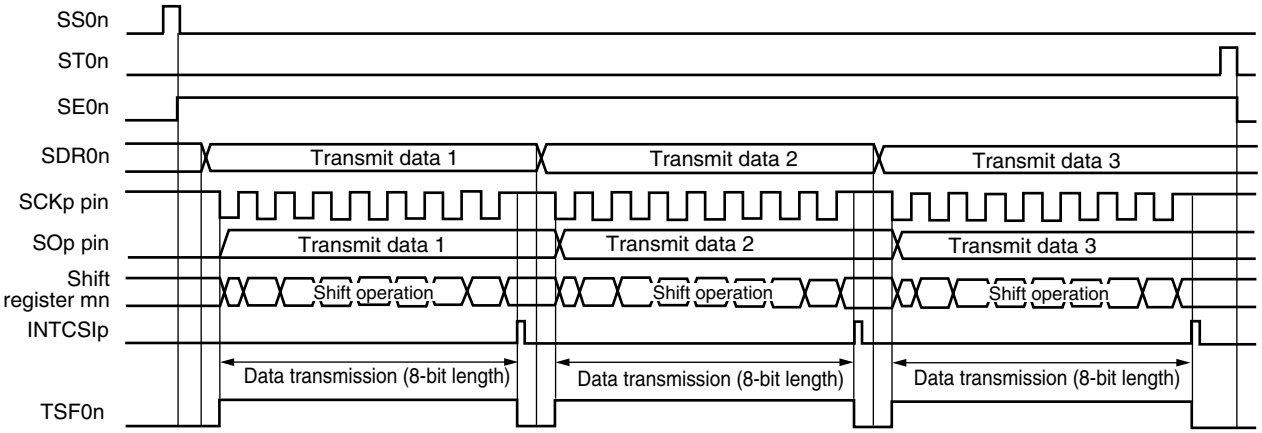

Remark n: Channel number (n = 0 to 2) (n = 2 (78K0R/IB3 and 38-pin products of 78K0R/IC3), n = 0 to 2 (44-pin and 48-pin products of 78K0R/IC3, 78K0R/ID3, and 78K0R/IE3))
p: CSI number (p = 00, 01, 10) (p = 10(78K0R/IB3 and 38-pin products of 78K0R/IC3), p = 00, 01, 10 (44-pin and 48-pin products of 78K0R/IC3, 78K0R/ID3, and 78K0R/IE3))

Figure 13-29. Flowchart of Master Transmission (in Single-Transmission Mode)

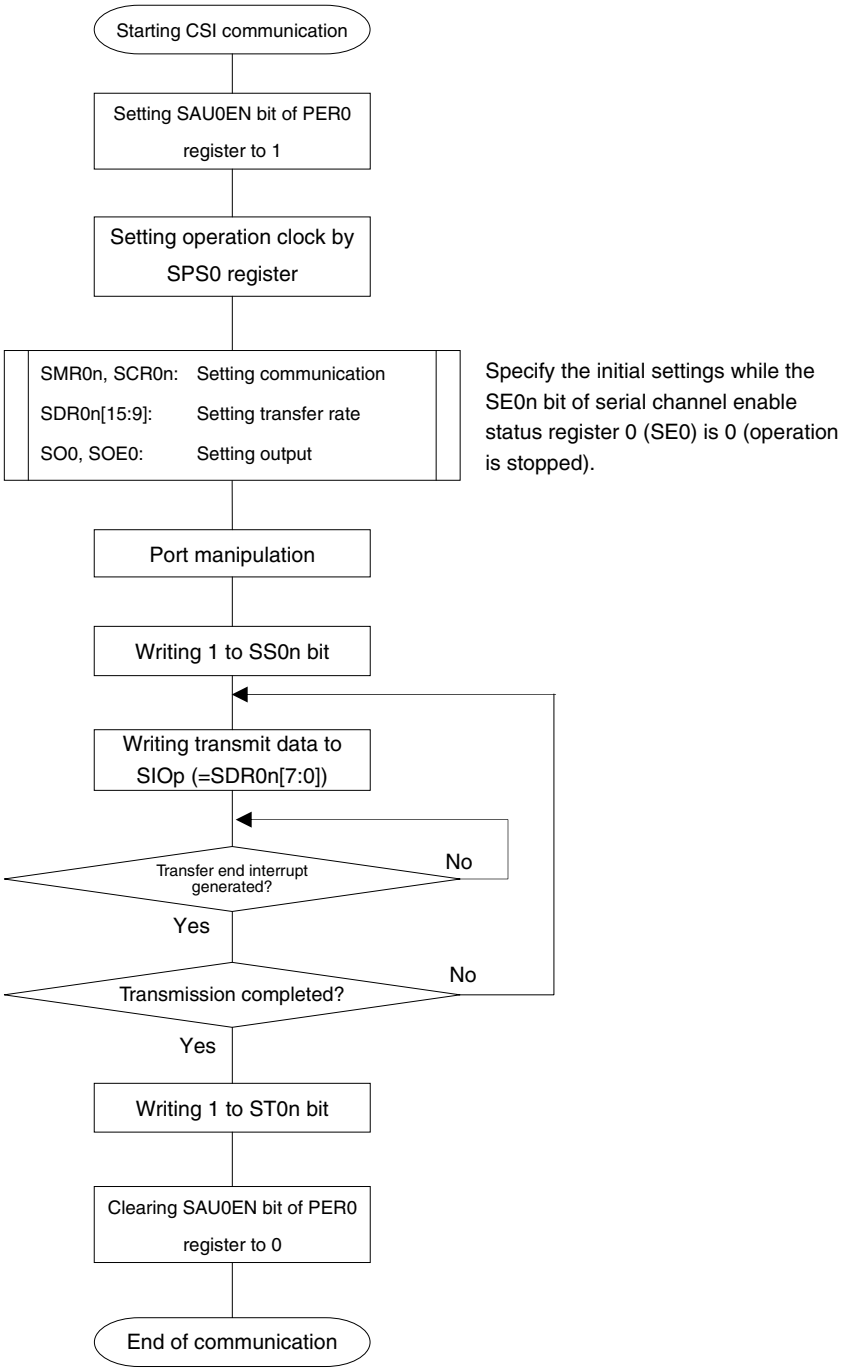

Caution After setting SAU0EN bit of the peripheral enable register 0 (PER0) to 1, be sure to set serial clock select register 0 (SPS0) after 4 or more f_{CLK} clocks have elapsed.

(4) Processing flow (in continuous transmission mode)

Figure 13-30. Timing Chart of Master Transmission (in Continuous Transmission Mode)
(Type 1: DAP0n = 0, CKP0n = 0)

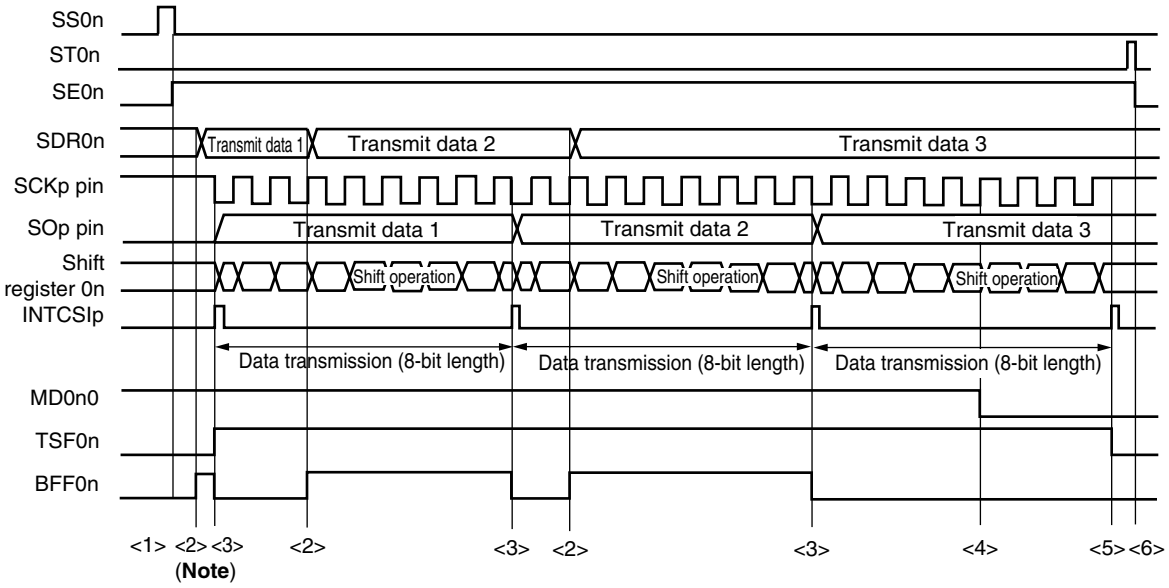

Note If transmit data is written to the SDR0n register while the BFF0n bit of serial status register 0n (SSR0n) is 1 (valid data is stored in serial data register 0n (SDR0n)), the transmit data is overwritten.

Caution **The MD0n0 bit of serial mode register 0n (SMR0n) can be rewritten even during operation. However, rewrite it before transfer of the last bit is started, so that it will be rewritten before the transfer end interrupt of the last transmit data.**

Remark n: Channel number (n = 0 to 2) (n = 2 (78K0R/IB3 and 38-pin products of 78K0R/IC3), n = 0 to 2 (44-pin and 48-pin products of 78K0R/IC3, 78K0R/ID3, and 78K0R/IE3))
p: CSI number (p = 00, 01, 10) (p = 10 (78K0R/IB3 and 38-pin products of 78K0R/IC3), p = 00, 01, 10 (44-pin and 48-pin products of 78K0R/IC3, 78K0R/ID3, and 78K0R/IE3))

Figure 13-31. Flowchart of Master Transmission (in Continuous Transmission Mode)

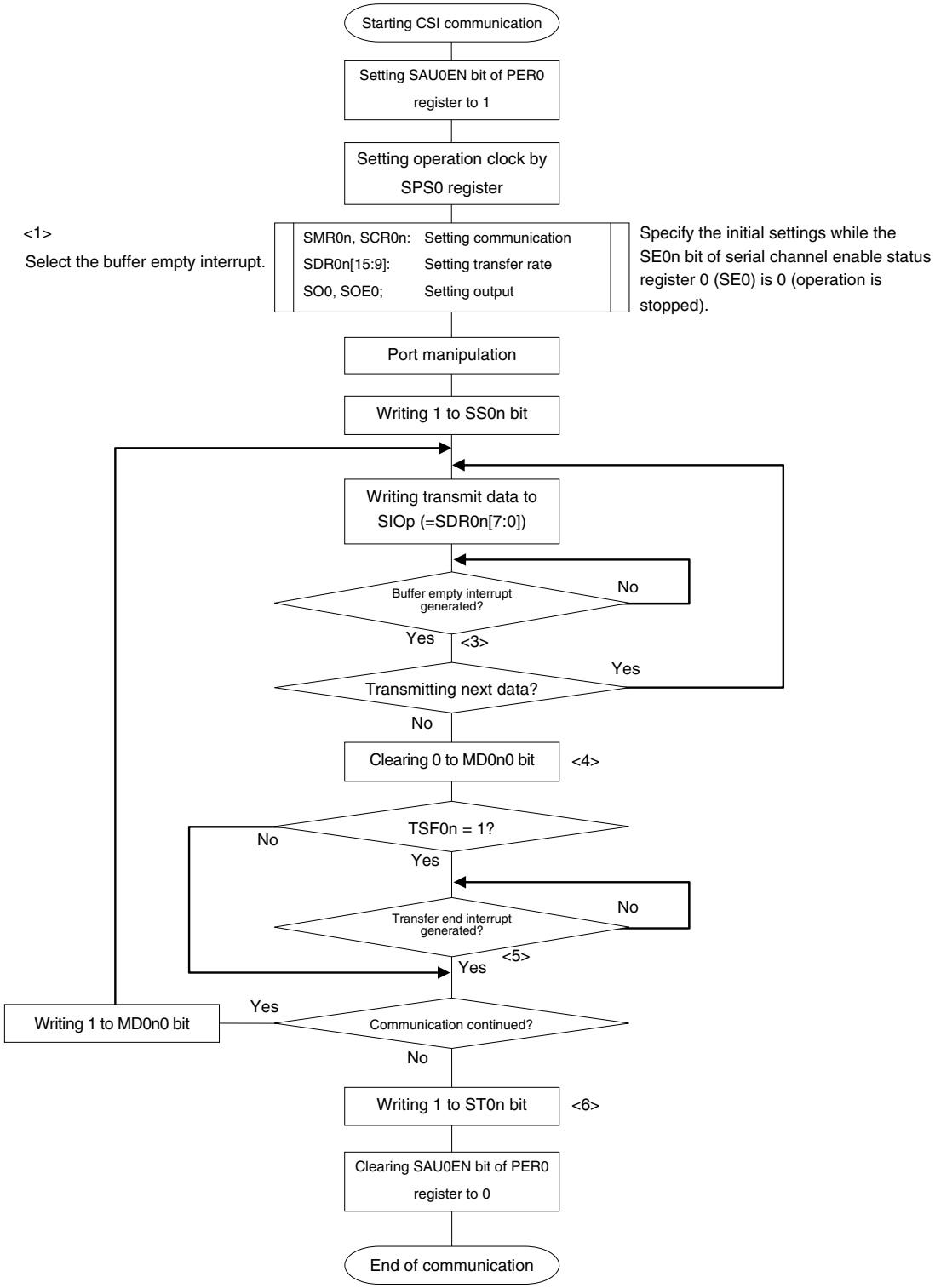

Caution **After setting SAU0EN bit of the peripheral enable register 0 (PER0) to 1, be sure to set serial clock select register 0 (SPS0) after 4 or more f_{CLK} clocks have elapsed.**

Remark <1> to <6> in the figure correspond to <1> to <6> in **Figure 13-30 Timing Chart of Master Transmission (in Continuous Transmission Mode).**

13.5.2 Master reception

Master reception is that the 78K0R/Ix3 outputs a transfer clock and receives data from other device.

3-Wire Serial I/O	CSI00 Note 1	CSI01 Note 1	CSI10
Target channel	Channel 0 of SAU	Channel 1 of SAU	Channel 2 of SAU
Pins used	SCK00, SI00	SCK01, SI01	SCK10, SI10
Interrupt	INTCSI00	INTCSI01	INTCSI10
	Transfer end interrupt (in single-transfer mode) or buffer empty interrupt (in continuous transfer mode) can be selected.		
Error detection flag	Overrun error detection flag (OVF0n) only		
Transfer data length	7 or 8 bits		
Transfer rate	Max. $f_{CLK}/4$ [Hz], Min. $f_{CLK}/(2 \times 2^{11} \times 128)$ [Hz] Note 2 f_{CLK}: System clock frequency		
Data phase	Selectable by DAP0n bit of SCR0n register • DAP0n = 0: Data input starts from the start of the operation of the serial clock. • DAP0n = 1: Data input starts half a clock before the start of the serial clock operation.		
Clock phase	Selectable by CKP0n bit of SCR0n register • CKP0n = 0: Forward • CKP0n = 1: Reverse		
Data direction	MSB or LSB first		

Notes **1.** CSI00 and CSI01 are only available in the 44-pin and 48-pin products of the 78K0R/IC3 and in the 78K0R/ID3 and 78K0R/IE3.

2. Use this operation within a range that satisfies the conditions above and the AC characteristics in the electrical specifications (see **CHAPTER 28 ELECTRICAL SPECIFICATIONS**).

Remark n: Channel number (n = 2 (78K0R/IB3 and 38-pin products of 78K0R/IC3), n = 0 to 2 (44-pin and 48-pin products of 78K0R/IC3, 78K0R/ID3, and 78K0R/IE3))

(1) Register setting

Figure 13-32. Example of Contents of Registers for Master Reception of 3-Wire Serial I/O (CSI00 Note, CSI01 Note, CSI10) (1/2)

(a) Serial mode register 0n (SMR0n)

	15	14	13	12	11	10	9	8	7	6	5	4	3	2	1	0
SMR0n	CKS0n 0/1	CCS0n 0	0	0	0	0	0	STS0n 0	0	SIS0n0 0	1	0	0	MD0n2 0	MD0n1 0	MD0n0 0

Operation clock (f_{MCK}) of channel n
0: Prescaler output clock CK00 set by SPS0 register
1: Prescaler output clock CK01 set by SPS0 register

Interrupt sources of channel n
0: Transfer end interrupt
1: Buffer empty interrupt

(b) Serial communication operation setting register 0n (SCR0n)

	15	14	13	12	11	10	9	8	7	6	5	4	3	2	1	0
SCR0n	TXE0n 0	RXE0n 1	DAP0n 0/1	CKP0n 0/1	0	EOC0n 0	PTC0n1 0	PTC0n0 0	DIR0n 0/1	0	SLC0n1 0	SLC0n0 0	0	DLS0n2 1	DLS0n1 1	DLS0n0 0/1

Selection of the data and clock phase (For details about the setting, see **13.3 Registers Controlling Serial Array Unit**.)

Selection of data transfer sequence
0: Inputs/outputs data with MSB first
1: Inputs/outputs data with LSB first.

Setting of data length
0: 7-bit data length
1: 8-bit data length

(c) Serial data register 0n (SDR0n) (lower 8 bits: SIOp)

	15	14	13	12	11	10	9	8	7	6	5	4	3	2	1	0
SDR0n	Baud rate setting (Operation clock (f_{MCK}) division setting)							0	Receive data (Write FFH as dummy data.)							

SIOp

(d) Serial output register 0 (SO0) … Sets only the bits of the target channel.

	15	14	13	12	11	10	9	8	7	6	5	4	3	2	1	0
SO0	0	0	0	0	1	CKO02 0/1	CKO01 0/1 Note	CKO00 0/1 Note	0	0	0	0	1	SO02 ×	SO01 × Note	SO00 ×

Communication starts when these bits are 1 if the clock phase is forward (the CKP0n bit of the SCR0n register = 0). If the clock phase is reversed (CKP0n bit = 1), communication starts when these bits are 0.

Note CSI00 and CSI01 are only available in the 44-pin and 48-pin products of the 78K0R/IC3 and in the 78K0R/ID3 and 78K0R/IE3.

Remark n: Channel number (n = 0 to 2) (n = 2 (78K0R/IB3 and 38-pin products of 78K0R/IC3), n = 0 to 2 (44-pin and 48-pin products of 78K0R/IC3, 78K0R/ID3, and 78K0R/IE3))
p: CSI number (p = 00, 01, 10) (p = 10 (78K0R/IB3 and 38-pin products of 78K0R/IC3), p = 00, 01, 10 (44-pin and 48-pin products of 78K0R/IC3, 78K0R/ID3, and 78K0R/IE3))
□ : Setting is fixed in the CSI master reception mode, ■: Setting disabled (set to the initial value)
×: Bit that cannot be used in this mode (set to the initial value when not used in any mode)
0/1: Set to 0 or 1 depending on the usage of the user

Figure 13-32. Example of Contents of Registers for Master Reception of 3-Wire Serial I/O (CSI00 Note, CSI01 Note, CSI10) (2/2)

(e) Serial output enable register 0 (SOE0) …The register that not used in this mode.

	15	14	13	12	11	10	9	8	7	6	5	4	3	2	1	0
SOE0	0	0	0	0	0	0	0	0	0	0	0	0	0	SOE02 ×	SOE01 × Note	SOE00 ×

(f) Serial channel start register 0 (SS0) … Sets only the bits of the target channel to 1.

	15	14	13	12	11	10	9	8	7	6	5	4	3	2	1	0
SS0	0	0	0	0	0	0	0	0	0	0	0	0	SS03 ×	SS02 0/1	SS01 0/1	SS00 0/1

Note CSI00 and CSI01 are only available in the 44-pin and 48-pin products of the 78K0R/IC3 and in the 78K0R/ID3 and 78K0R/IE3.

Remark ▒ : Setting disabled (set to the initial value)
×: Bit that cannot be used in this mode (set to the initial value when not used in any mode)
0/1: Set to 0 or 1 depending on the usage of the user

(2) Operation procedure

Figure 13-33. Initial Setting Procedure for Master Reception

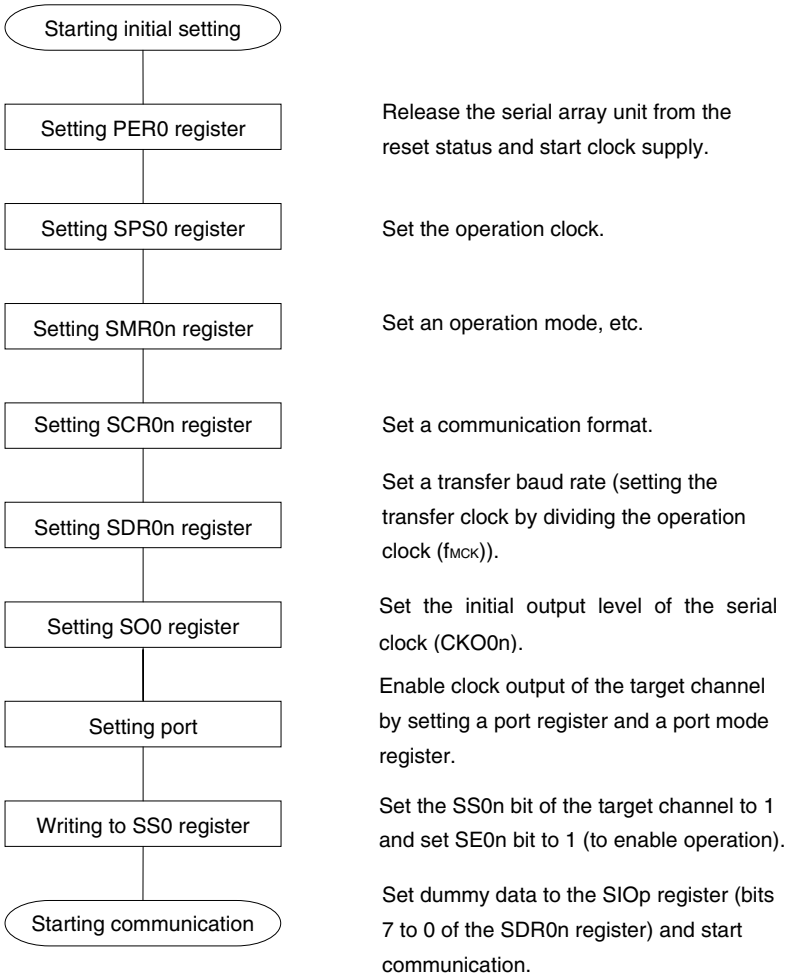

Caution **After setting the SAU0EN bit of peripheral enable register 0 (PER0) to 1, be sure to set serial clock select register 0 (SPS0) after 4 or more f_{CLK} clocks have elapsed.**

Figure 13-34. Procedure for Stopping Master Reception

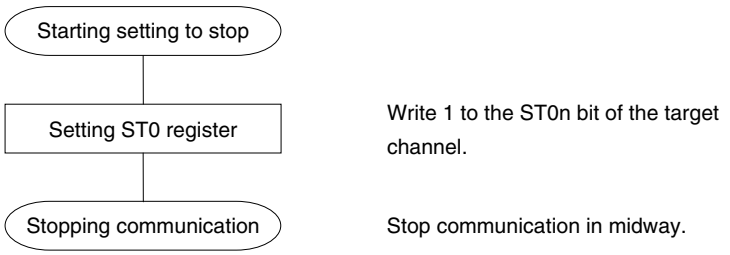

Remark Even after communication is stopped, the pin level is retained. To resume the operation, re-set the serial output register (SO0) (see **Figure 13-35 Procedure for Resuming Master Reception**).

Figure 13-35. Procedure for Resuming Master Reception

Disable clock output of the target channel by setting a port register and a port mode register.

Re-set the register to change the operation clock setting.

Re-set the register to change the transfer baud rate setting (setting the transfer clock by dividing the operation clock (f_{MCK})).

Re-set the register to change the serial mode register 0n (SMR0n) setting.

Re-set the register to change the serial communication operation setting register 0n (SCR0n) setting.

Set the initial output level of the serial clock (CKO0n).

If the FEF, PEF, and OVF flags remain set, clear them using serial flag clear trigger register 0n (SIR0n).

Enable clock output of the target channel by setting a port register and a port mode register.

Set the SS0n bit of the target channel to 1 and set SE0n bit to 1 (to enable operation).

Sets dummy data to the SIOp register (bits 7 to 0 of the SDR0n register) and start communication.

(3) Processing flow (in single-reception mode)

Figure 13-36. Timing Chart of Master Reception (in Single-Reception Mode)
(Type 1: DAP0n = 0, CKP0n = 0)

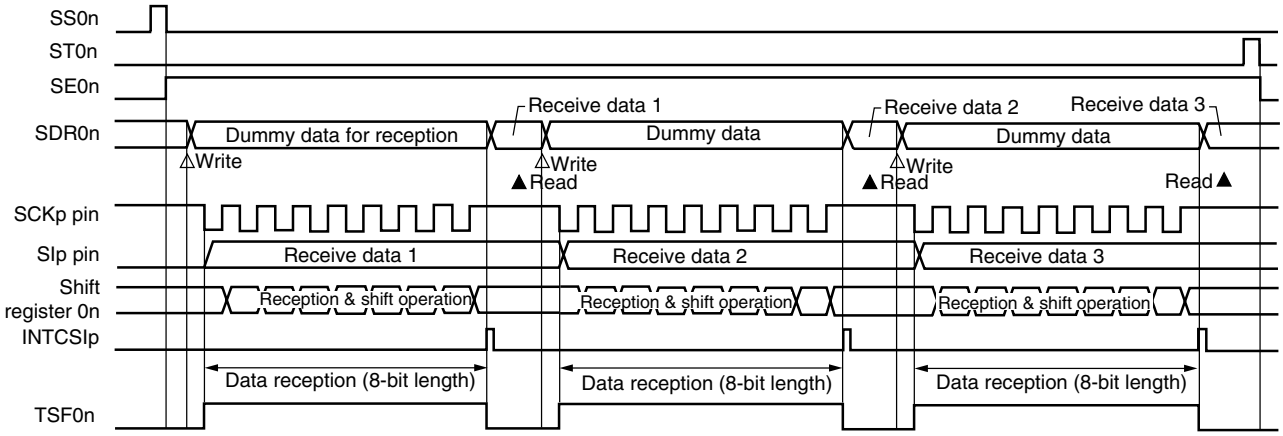

Remark n: Channel number (n = 0 to 2) (n = 2 (78K0R/IB3 and 38-pin products of 78K0R/IC3), n = 0 to 2 (44-pin and 48-pin products of 78K0R/IC3, 78K0R/ID3, and 78K0R/IE3))
p: CSI number (p = 00, 01, 10) (p = 10(78K0R/IB3 and 38-pin products of 78K0R/IC3), p = 00, 01, 10 (44-pin and 48-pin products of 78K0R/IC3, 78K0R/ID3, and 78K0R/IE3))

Figure 13-37. Flowchart of Master Reception (in Single-Reception Mode)

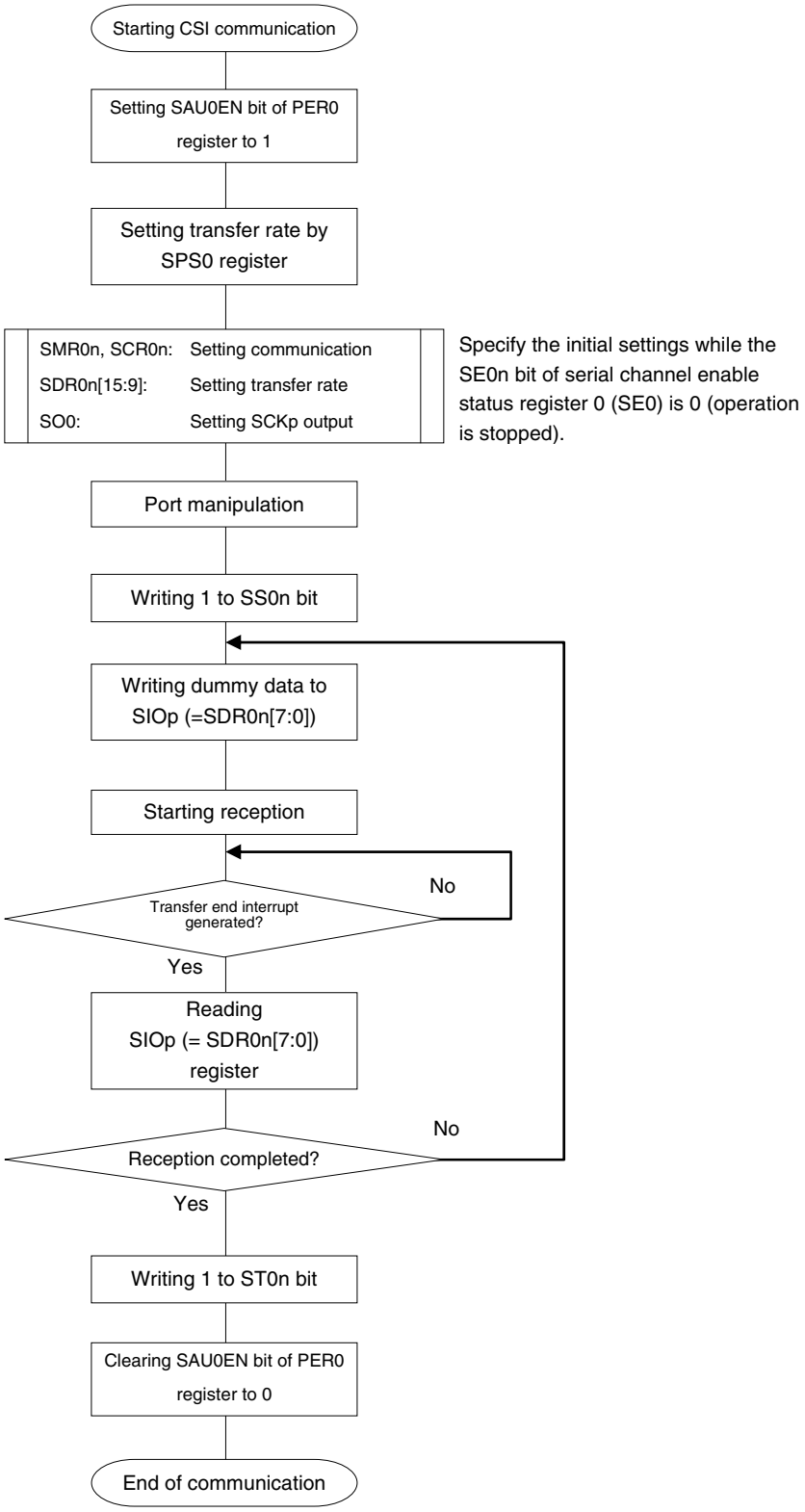

Caution After setting SAU0EN bit of the peripheral enable register 0 (PER0) to 1, be sure to set serial clock select register 0 (SPS0) after 4 or more f_{CLK} clocks have elapsed.

(4) Processing flow (in continuous reception mode)

Figure 13-38. Timing Chart of Master Reception (in Continuous Reception Mode) (Type 1: DAP0n = 0, CKP0n = 0)

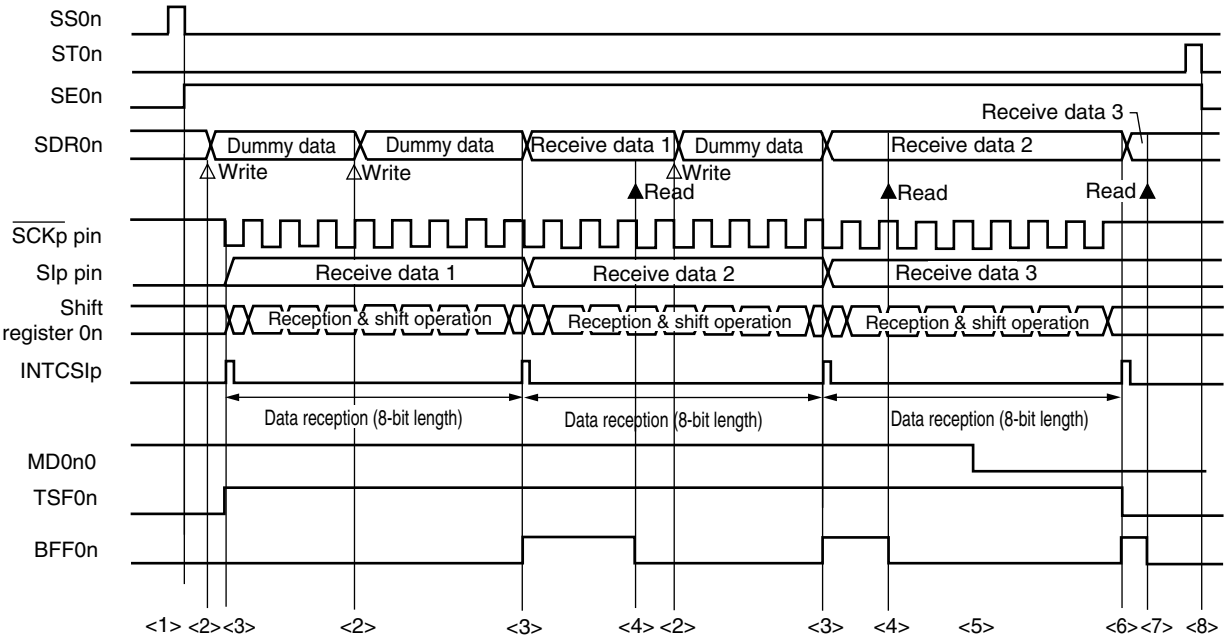

Caution The MD0n0 bit of serial mode register 0n (SMR0n) can be rewritten even during operation. However, rewrite it before receive of the last bit is started, so that it has been rewritten before the transfer end interrupt of the last receive data.

Remarks 1. <1> to <8> in the figure correspond to <1> to <8> in **Figure 13-39 Flowchart of Master Reception (in Continuous Reception Mode)**.

2. n: Channel number (n = 2 (78K0R/IB3 and 38-pin products of 78K0R/IC3), n = 0 to 2 (44-pin and 48-pin products of 78K0R/IC3, 78K0R/ID3, and 78K0R/IE3))
p: CSI number (p = 00, 01, 10) (p = 10(78K0R/IB3 and 38-pin products of 78K0R/IC3), p = 00, 01, 10 (44-pin and 48-pin products of 78K0R/IC3, 78K0R/ID3, and 78K0R/IE3))

Figure 13-39. Flowchart of Master Reception (in Continuous Reception Mode)

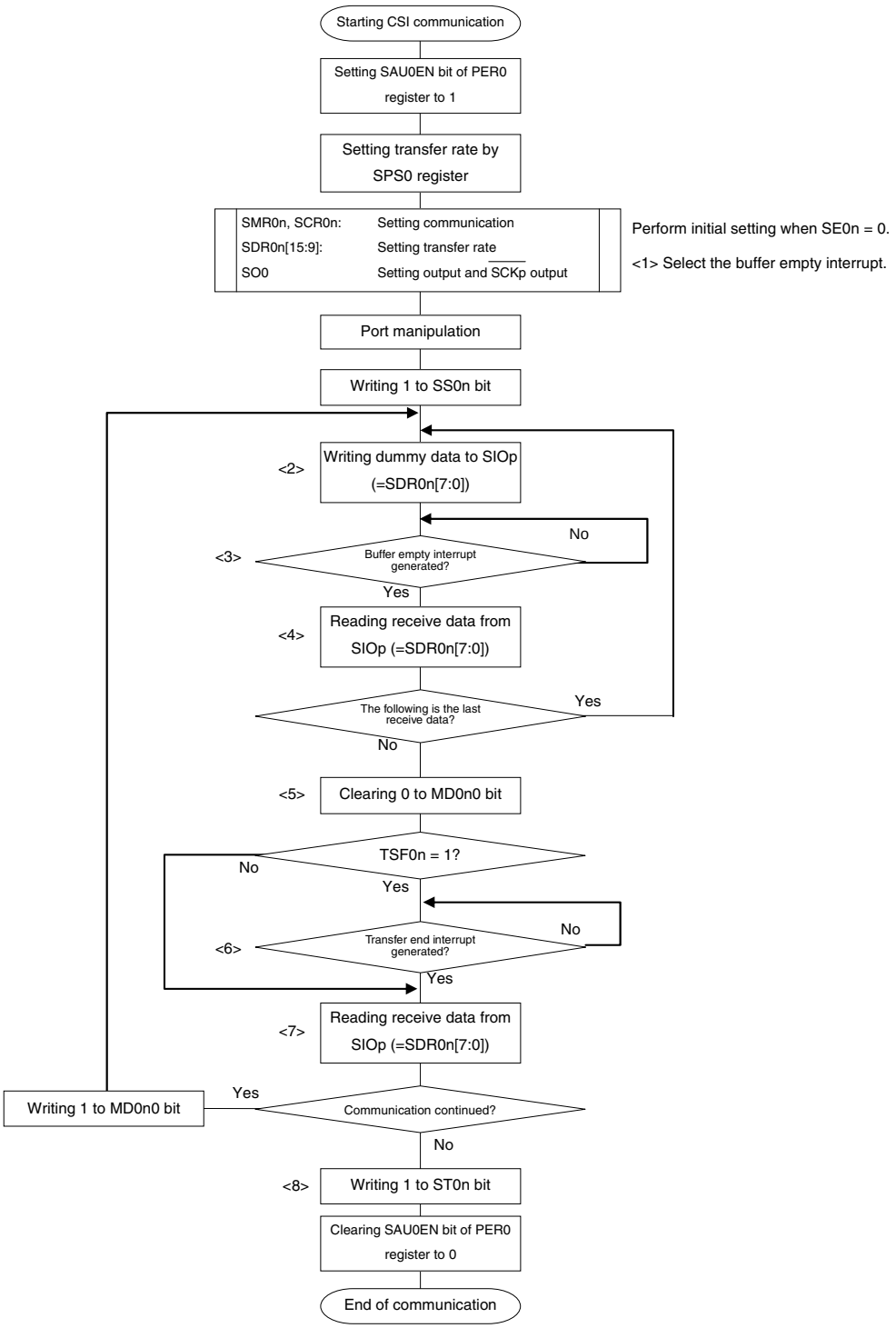

Caution After setting SAU0EN bit of the peripheral enable register 0 (PER0) to 1, be sure to set serial clock select register 0 (SPS0) after 4 or more f_{CLK} clocks have elapsed.

Remark <1> to <8> in the figure correspond to <1> to <8> in **Figure 13-38 Timing Chart of Master Reception (in Continuous Reception Mode)**.

13.5.3 Master transmission/reception

Master transmission/reception is that the 78K0R/Ix3 outputs a transfer clock and transmits/receives data to/from other device.

3-Wire Serial I/O	CSI00 Note	CSI01 Note	CSI10
Target channel	Channel 0 of SAU	Channel 1 of SAU	Channel 2 of SAU
Pins used	SCK00, SI00, SO00	SCK01, SI01, SO01	SCK10, SI10, SO10
Interrupt	INTCSI00	INTCSI01	INTCSI10
	Transfer end interrupt (in single-transfer mode) or buffer empty interrupt (in continuous transfer mode) can be selected.		
Error detection flag	Overrun error detection flag (OVF0n) only		
Transfer data length	7 or 8 bits		
Transfer rate	Max. $f_{CLK}/4$ [Hz], Min. $f_{CLK}/(2 \times 2^{11} \times 128)$ [Hz] Note f_{CLK}: System clock frequency		
Data phase	Selectable by DAP0n bit of SCR0n register • DAP0n = 0: Data I/O starts at the start of the operation of the serial clock. • DAP0n = 1: Data I/O starts half a clock before the start of the serial clock operation.		
Clock phase	Selectable by CKP0n bit of SCR0n register • CKP0n = 0: Forward • CKP0n = 1: Reverse		
Data direction	MSB or LSB first		

Notes **1.** CSI00 and CSI01 are only available in the 44-pin and 48-pin products of the 78K0R/IC3 and in the 78K0R/ID3 and 78K0R/IE3.

2. Use this operation within a range that satisfies the conditions above and the AC characteristics in the electrical specifications (see **CHAPTER 28 ELECTRICAL SPECIFICATIONS**).

Remark n: Channel number (n = 2 (78K0R/IB3 and 38-pin products of 78K0R/IC3), n = 0 to 2 (44-pin and 48-pin products of 78K0R/IC3, 78K0R/ID3, and 78K0R/IE3))

(1) Register setting

Figure 13-40. Example of Contents of Registers for Master Transmission/Reception of 3-Wire Serial I/O (CSI00 Note, CSI01 Note, CSI10) (1/2)

(a) Serial mode register 0n (SMR0n)

	15	14	13	12	11	10	9	8	7	6	5	4	3	2	1	0
SMR0n	CKS0n 0/1	CCS0n 0	0	0	0	0	0	STS0n 0	0	SIS0n0 0	1	0	0	MD0n2 0	MD0n1 0	MD0n0 0/1

Operation clock (f_{MCK}) of channel n
0: Prescaler output clock CK00 set by SPS0 register
1: Prescaler output clock CK01 set by SPS0 register

Interrupt source of channel n
0: Transfer end interrupt
1: Buffer empty interrupt

(b) Serial communication operation setting register 0n (SCR0n)

	15	14	13	12	11	10	9	8	7	6	5	4	3	2	1	0
SCR0n	TXE0n 1	RXE0n 1	DAP0n 0/1	CKP0n 0/1	0	EOC0n 0	PTC0n1 0	PTC0n0 0	DIR0n 0/1	0	SLC0n1 0	SLC0n0 0	0	DLS0n2 1	DLS0n1 1	DLS0n0 0/1

Selection of the data and clock phase (For details about the setting, see **13.3 Registers Controlling Serial Array Unit**.)

Selection of data transfer sequence
0: Inputs/outputs data with MSB first
1: Inputs/outputs data with LSB first.

Setting of data length
0: 7-bit data length
1: 8-bit data length

(c) Serial data register 0n (SDR0n) (lower 8 bits: SIOp)

	15	14	13	12	11	10	9	8	7	6	5	4	3	2	1	0
SDR0n	Baud rate setting (Operation clock (f_{MCK}) division setting)							0	Transmit data setting/receive data register							

SIOp

(d) Serial output register 0 (SO0) … Sets only the bits of the target channel.

	15	14	13	12	11	10	9	8	7	6	5	4	3	2	1	0
SO0	0	0	0	0	1	CKO02 0/1	CKO01 0/1 Note	CKO00 0/1 Note	0	0	0	0	1	SO02 0/1	SO01 0/1 Note	SO00 0/1

Communication starts when these bits are 1 if the clock phase is forward (the CKP0n bit of the SCR0n register = 0). If the clock phase is reversed (CKP0n bit = 1), communication starts when these bits are 0.

Note CSI00 and CSI01 are only available in the 44-pin and 48-pin products of the 78K0R/IC3 and in the 78K0R/ID3 and 78K0R/IE3.

Remark n: Channel number (n = 0 to 2) (n = 2 (78K0R/IB3 and 38-pin products of 78K0R/IC3), n = 0 to 2 (44-pin and 48-pin products of 78K0R/IC3, 78K0R/ID3, and 78K0R/IE3))
p: CSI number (p = 00, 01, 10) (p = 10(78K0R/IB3 and 38-pin products of 78K0R/IC3), p = 00, 01, 10 (44-pin and 48-pin products of 78K0R/IC3, 78K0R/ID3, and 78K0R/IE3))
□ : Setting is fixed in the CSI master transmission/reception mode
▒ : Setting disabled (set to the initial value)
×: Bit that cannot be used in this mode (set to the initial value when not used in any mode)
0/1: Set to 0 or 1 depending on the usage of the user

Figure 13-40. Example of Contents of Registers for Master Transmission/Reception of 3-Wire Serial I/O (CSI00 Note, CSI01 Note, CSI10) (2/2)

(e) Serial output enable register 0 (SOE0) … Sets only the bits of the target channel to 1.

	15	14	13	12	11	10	9	8	7	6	5	4	3	2	1	0
SOE0	0	0	0	0	0	0	0	0	0	0	0	0	0	SOE02 0/1	SOE01 0/1 Note	SOE00 0/1

(f) Serial channel start register 0 (SS0) … Sets only the bits of the target channel to 1.

	15	14	13	12	11	10	9	8	7	6	5	4	3	2	1	0
SS0	0	0	0	0	0	0	0	0	0	0	0	0	SS03 ×	SS02 0/1	SS01 0/1	SS00 0/1

Note CSI00 and CSI01 are only available in the 44-pin and 48-pin products of the 78K0R/IC3 and in the 78K0R/ID3 and 78K0R/IE3.

Remark ▒ : Setting disabled (set to the initial value)
×: Bit that cannot be used in this mode (set to the initial value when not used in any mode)
0/1: Set to 0 or 1 depending on the usage of the user

(2) Operation procedure

Figure 13-41. Initial Setting Procedure for Master Transmission/Reception

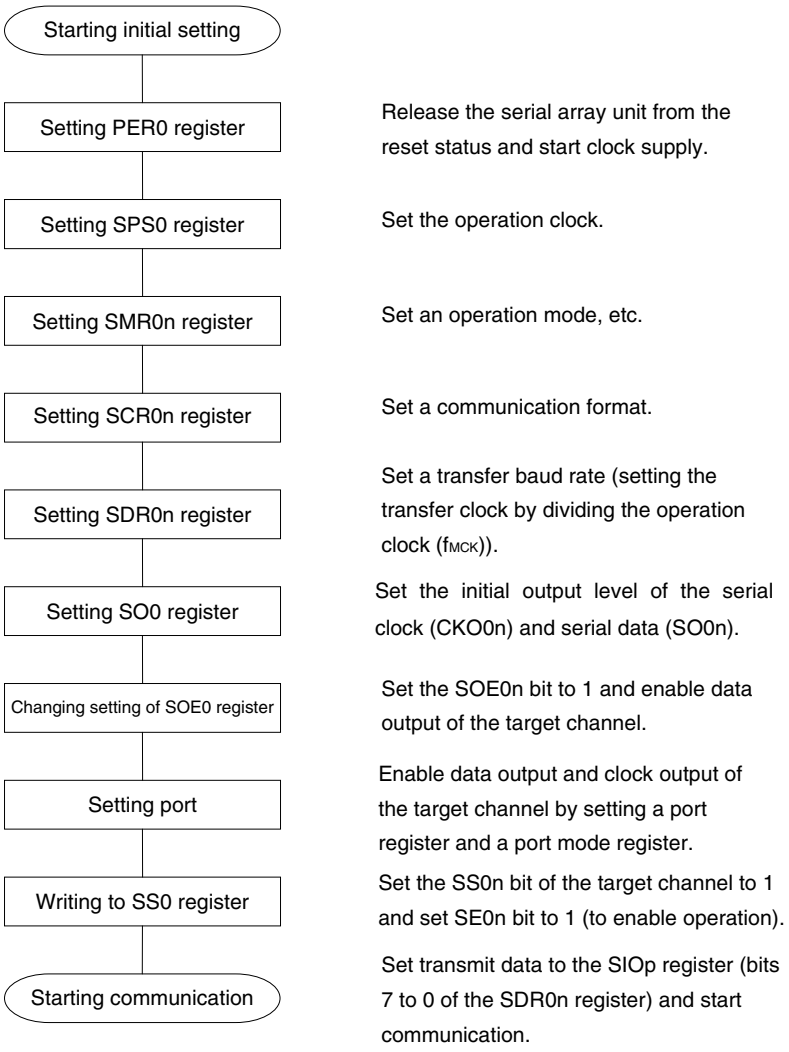

Caution After setting the SAU0EN bit of peripheral enable register 0 (PER0) to 1, be sure to set serial clock select register 0 (SPS0) after 4 or more f_{CLK} clocks have elapsed.

Figure 13-42. Procedure for Stopping Master Transmission/Reception

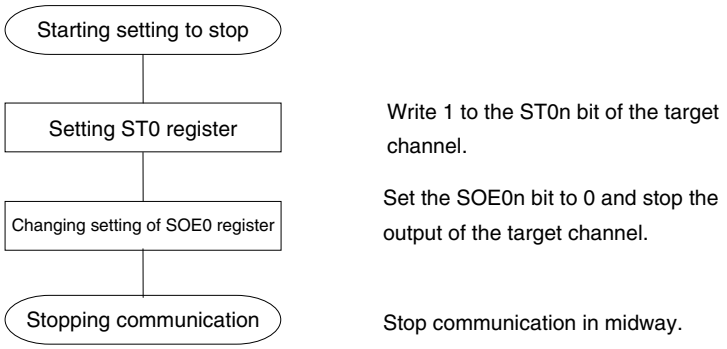

Remark Even after communication is stopped, the pin level is retained. To resume the operation, re-set the serial output register 0 (SO0) (see **Figure 13-43 Procedure for Resuming Master Transmission**).

Figure 13-43. Procedure for Resuming Master Transmission/Reception

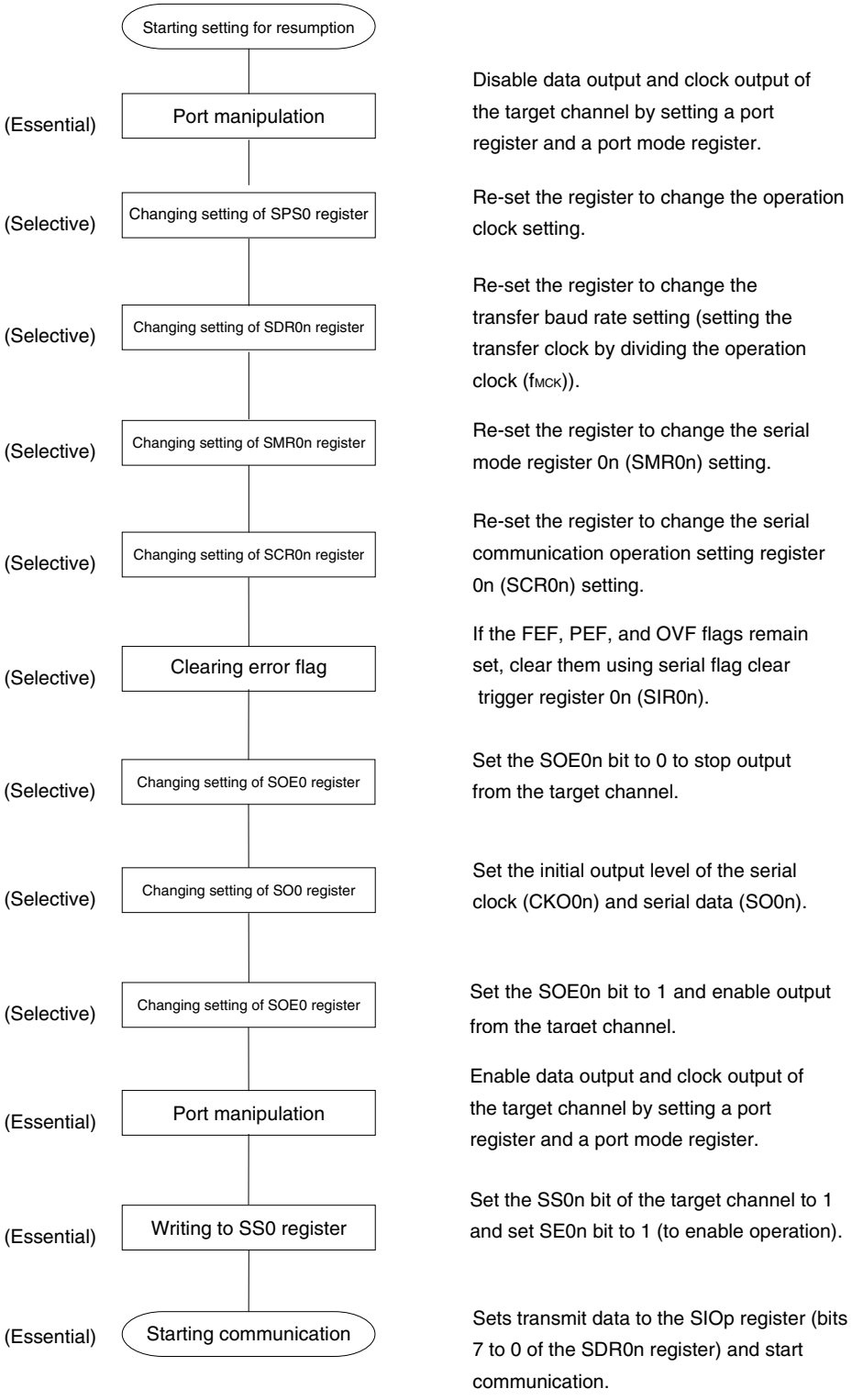

(3) Processing flow (in single-transmission/reception mode)

Figure 13-44. Timing Chart of Master Transmission/Reception (in Single-Transmission/Reception Mode) (Type 1: DAP0n = 0, CKP0n = 0)

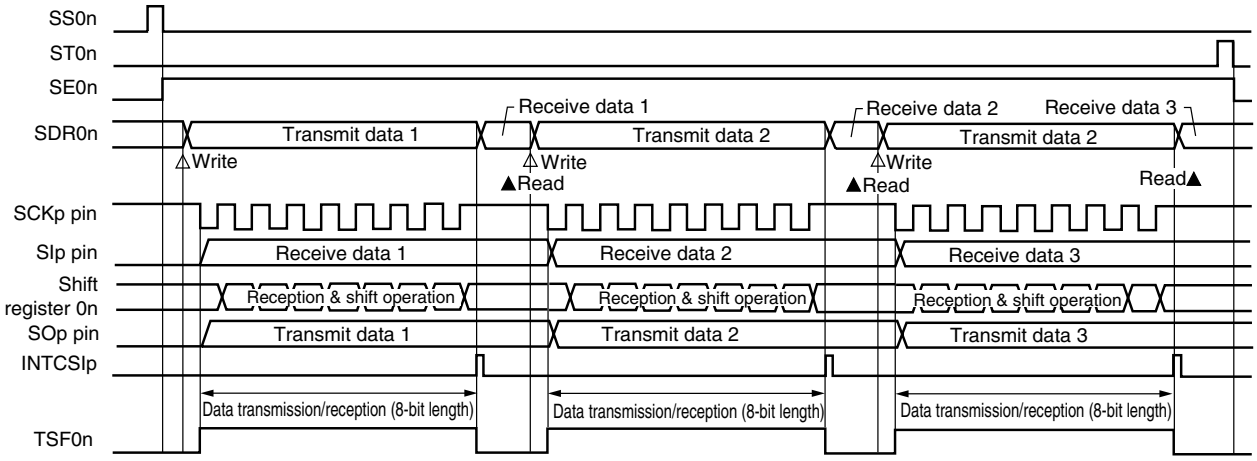

Remark n: Channel number (n = 0 to 2) (n = 2 (78K0R/IB3 and 38-pin products of 78K0R/IC3), n = 0 to 2 (44-pin and 48-pin products of 78K0R/IC3, 78K0R/ID3, and 78K0R/IE3)
p: CSI number (p = 00, 01, 10) (p = 10(78K0R/IB3 and 38-pin products of 78K0R/IC3), p = 00, 01, 10 (44-pin and 48-pin products of 78K0R/IC3, 78K0R/ID3, and 78K0R/IE3)

Figure 13-45. Flowchart of Master Transmission/Reception (in Single- Transmission/Reception Mode)

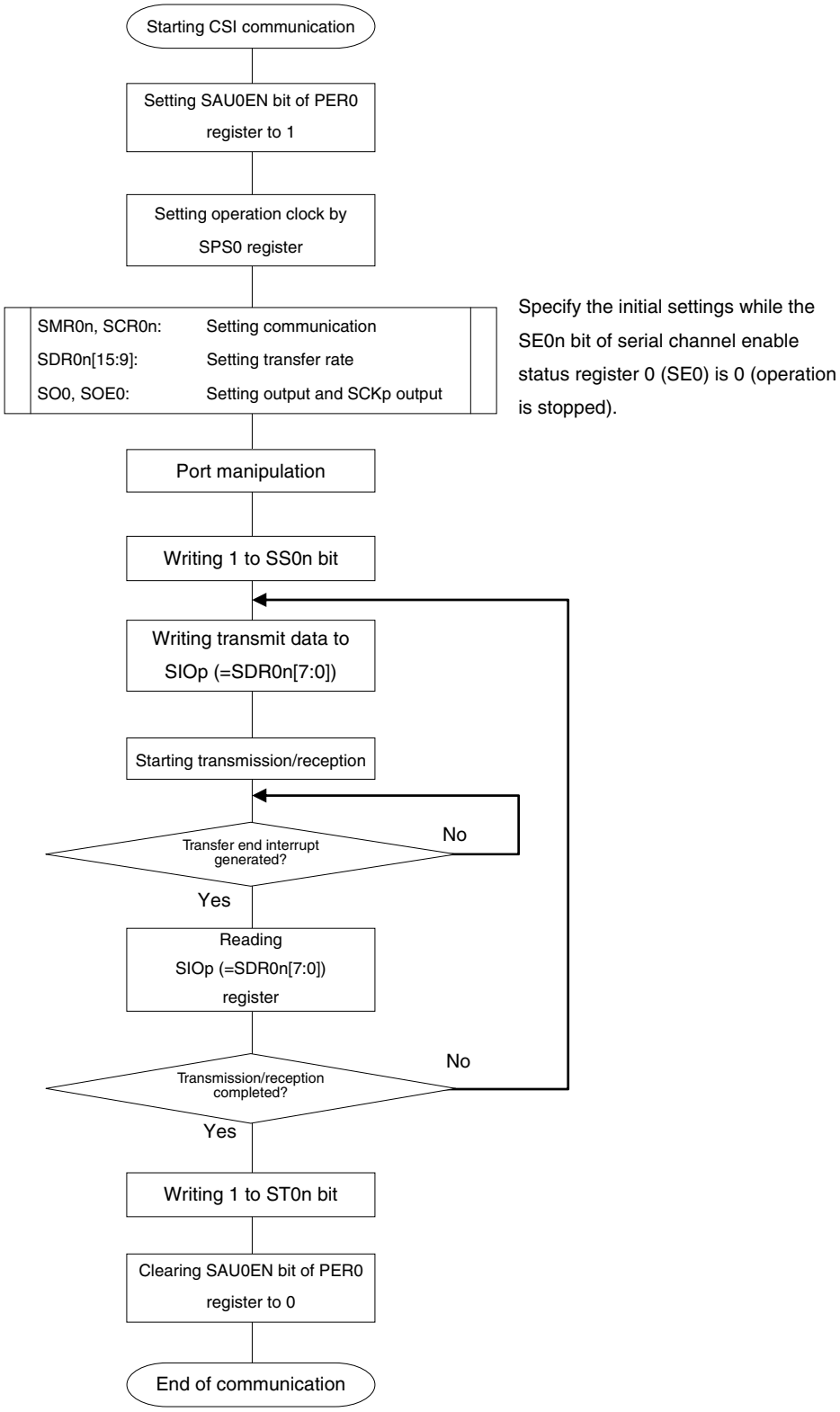

Caution After setting SAU0EN bit of the peripheral enable register 0 (PER0) to 1, be sure to set serial clock select register 0 (SPS0) after 4 or more f_{CLK} clocks have elapsed.

(4) Processing flow (in continuous transmission/reception mode)

Figure 13-46. Timing Chart of Master Transmission/Reception (in Continuous Transmission/Reception Mode) (Type 1: DAP0n = 0, CKP0n = 0)

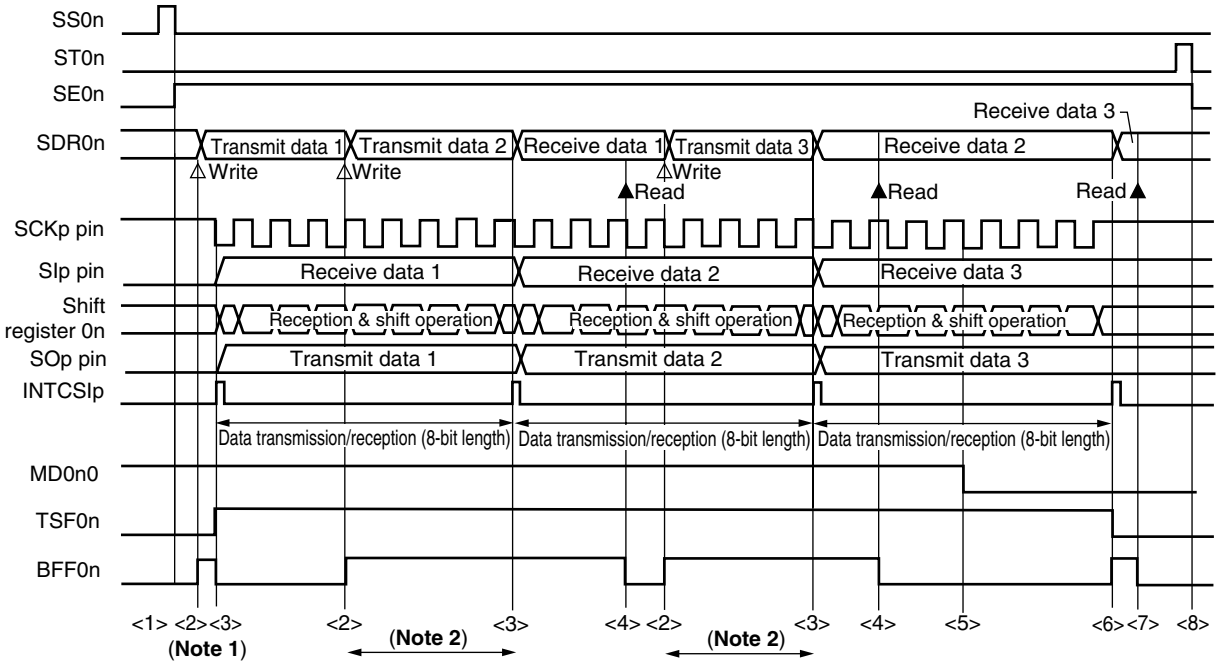

Notes 1. If transmit data is written to the SDR0n register while the BFF0n bit of serial status register 0n (SSR0n) is 1 (valid data is stored in serial data register 0n (SDR0n)), the transmit data is overwritten.

2. The transmit data can be read by reading the SDR0n register during this period. At this time, the transfer operation is not affected.

Caution The MD0n0 bit of serial mode register 0n (SMR0n) can be rewritten even during operation. However, rewrite it before transfer of the last bit is started, so that it has been rewritten before the transfer end interrupt of the last transmit data.

Remarks 1. <1> to <8> in the figure correspond to <1> to <8> in **Figure 13-47 Flowchart of Master Transmission/Reception (in Continuous Transmission/Reception Mode)**.

2. n: Channel number (n = 0 to 2) (n = 2 (78K0R/IB3 and 38-pin products of 78K0R/IC3), n = 0 to 2 (44-pin and 48-pin products of 78K0R/IC3, 78K0R/ID3, and 78K0R/IE3))

p: CSI number (p = 00, 01, 10) (p = 10(78K0R/IB3 and 38-pin products of 78K0R/IC3), p = 00, 01, 10 (44-pin and 48-pin products of 78K0R/IC3, 78K0R/ID3, and 78K0R/IE3))

Figure 13-47. Flowchart of Master Transmission/Reception (in Continuous Transmission/Reception Mode)

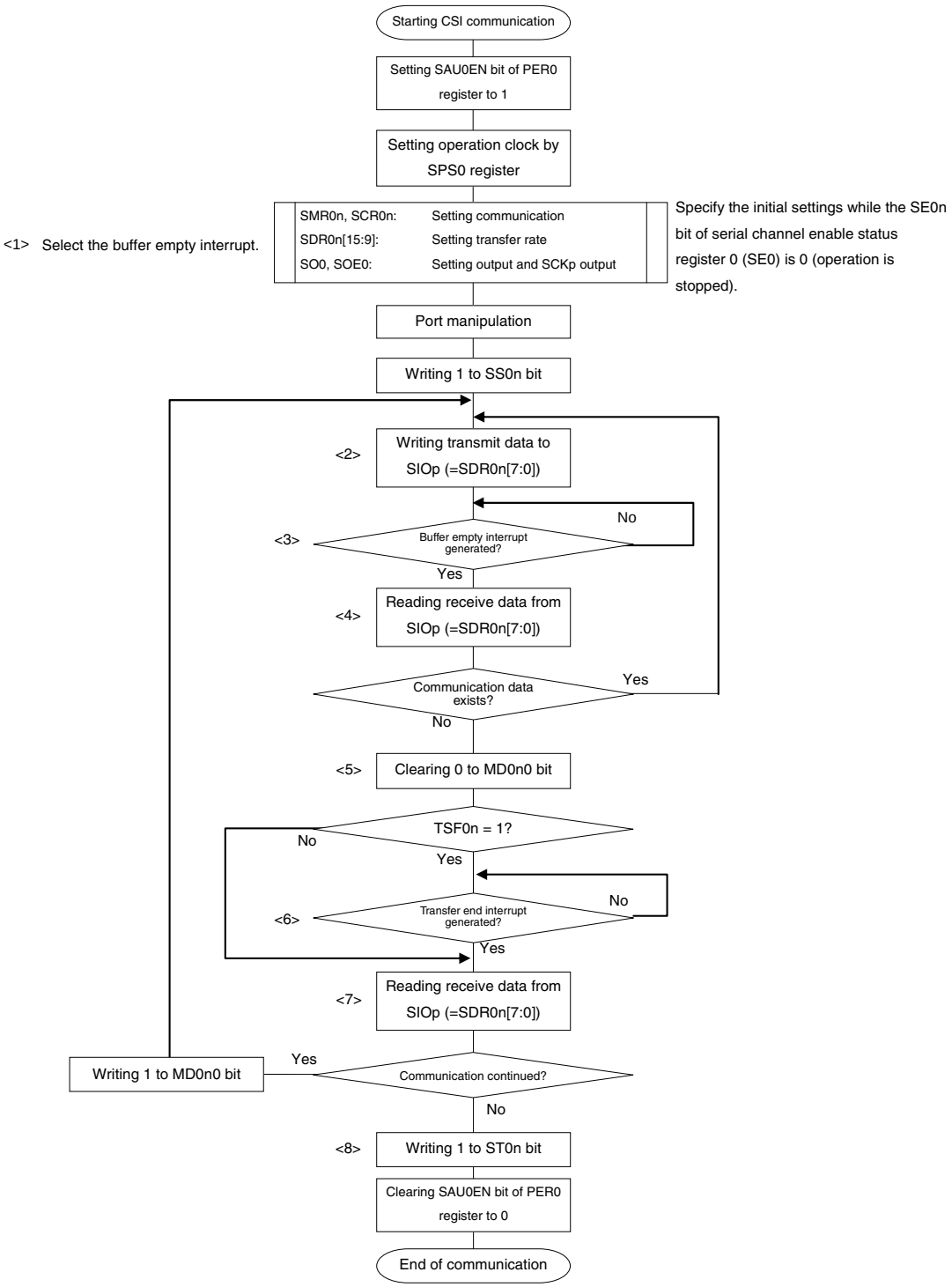

Caution **After setting the SAU0EN bit of peripheral enable register 0 (PER0) to 1, be sure to set serial clock select register 0 (SPS0) after 4 or more f_{CLK} clocks have elapsed.**

Remark <1> to <8> in the figure correspond to <1> to <8> in **Figure 13-46 Timing Chart of Master Transmission/Reception (in Continuous Transmission/Reception Mode).**

13.5.4 Slave transmission

Slave transmission is that the 78K0R/Ix3 transmits data to another device in the state of a transfer clock being input from another device.

3-Wire Serial I/O	CSI00 Note 1	CSI01 Note 1	CSI10
Target channel	Channel 0 of SAU	Channel 1 of SAU	Channel 2 of SAU
Pins used	SCK00, SO00	SCK01, SO01	SCK10, SO10
Interrupt	INTCSI00	INTCSI01	INTCSI10
	Transfer end interrupt (in single-transfer mode) or buffer empty interrupt (in continuous transfer mode) can be selected.		
Error detection flag	Overrun error detection flag (OVF0n) only		
Transfer data length	7 or 8 bits		
Transfer rate	Max. f_{MCK}/6 [Hz] Notes 2, 3.		
Data phase	Selectable by DAP0n bit of SCR0n register • DAP0n = 0: Data output starts from the start of the operation of the serial clock. • DAP0n = 1: Data output starts half a clock before the start of the serial clock operation.		
Clock phase	Selectable by CKP0n bit of SCR0n register • CKP0n = 0: Forward • CKP0n = 1: Reverse		
Data direction	MSB or LSB first		

Notes 1. CSI00 and CSI01 are only available in the 44-pin and 48-pin products of the 78K0R/IC3 and in the 78K0R/ID3 and 78K0R/IE3.

2. Because the external serial clock input to pins SCK00, SCK01, and SCK10 is sampled internally and used, the fastest transfer rate is f_{MCK}/6 [Hz].

3. Use this operation within a range that satisfies the conditions above and the AC characteristics in the electrical specifications (see **CHAPTER 28 ELECTRICAL SPECIFICATIONS**).

Remarks 1. f_{MCK}: Operation clock frequency of target channel

2. n: Channel number (n = 2 (78K0R/IB3 and 38-pin products of 78K0R/IC3), n = 0 to 2 (44-pin and 48-pin products of 78K0R/IC3, 78K0R/ID3, and 78K0R/IE3))

(1) Register setting

Figure 13-48. Example of Contents of Registers for Slave Transmission of 3-Wire Serial I/O (CSI00 Note, CSI01 Note, CSI10) (1/2)

(a) Serial mode register 0n (SMR0n)

	15	14	13	12	11	10	9	8	7	6	5	4	3	2	1	0
SMR0n	CKS0n 0/1	CCS0n 1	0	0	0	0	0	STS0n 0	0	SIS0n0 0	1	0	0	MD0n2 0	MD0n1 0	MD0n0 0/1

Operation clock (f_{MCK}) of channel n
0: Prescaler output clock CK00 set by SPS0 register
1: Prescaler output clock CK01 set by SPS0 register

Interrupt source of channel n
0: Transfer end interrupt
1: Buffer empty interrupt

(b) Serial communication operation setting register 0n (SCR0n)

	15	14	13	12	11	10	9	8	7	6	5	4	3	2	1	0
SCR0n	TXE0n 1	RXE0n 0	DAP0n 0/1	CKP0n 0/1	0	EOC0n 0	PTC0n1 0	PTC0n0 0	DIR0n 0/1	0	SLC0n1 0	SLC0n0 0	0	DLS0n2 1	DLS0n1 1	DLS0n0 0/1

Selection of the data and clock phase (For details about the setting, see **13.3 Registers Controlling Serial Array Unit**.)

Selection of data transfer sequence
0: Inputs/outputs data with MSB first
1: Inputs/outputs data with LSB first.

Setting of data length
0: 7-bit data length
1: 8-bit data length

(c) Serial data register 0n (SDR0n) (lower 8 bits: SIOp)

	15	14	13	12	11	10	9	8	7	6	5	4	3	2	1	0
SDR0n	0000000 Baud rate setting							0	Transmit data setting							

SIOp

(d) Serial output register 0 (SO0) … Sets only the bits of the target channel.

	15	14	13	12	11	10	9	8	7	6	5	4	3	2	1	0
SO0	0	0	0	0	1	CKO02 ×	CKO01 × Note	CKO00 × Note	0	0	0	0	1	SO02 0/1	SO01 0/1 Note	SO00 0/1

Note CSI00 and CSI01 are only available in the 44-pin and 48-pin products of the 78K0R/IC3 and in the 78K0R/ID3 and 78K0R/IE3.

Remark n: Channel number (n = 0 to 2) (n = 2 (78K0R/IB3 and 38-pin products of 78K0R/IC3), n = 0 to 2 (44-pin and 48-pin products of 78K0R/IC3, 78K0R/ID3, and 78K0R/IE3))
p: CSI number (p = 00, 01, 10) (p = 10 (78K0R/IB3 and 38-pin products of 78K0R/IC3), p = 00, 01, 10 (44-pin and 48-pin products of 78K0R/IC3, 78K0R/ID3, and 78K0R/IE3))
□ : Setting is fixed in the CSI slave transmission mode, ■: Setting disabled (set to the initial value)
×: Bit that cannot be used in this mode (set to the initial value when not used in any mode)
0/1: Set to 0 or 1 depending on the usage of the user

Figure 13-48. Example of Contents of Registers for Slave Transmission of 3-Wire Serial I/O (CSI00 Note, CSI01 Note, CSI10) (2/2)

(e) Serial output enable register 0 (SOE0) … Sets only the bits of the target channel to 1.

	15	14	13	12	11	10	9	8	7	6	5	4	3	2	1	0
SOE0	0	0	0	0	0	0	0	0	0	0	0	0	0	SOE02 0/1	SOE01 0/1 Note	SOE00 0/1

(f) Serial channel start register 0 (SS0) … Sets only the bits of the target channel to 1.

	15	14	13	12	11	10	9	8	7	6	5	4	3	2	1	0
SS0	0	0	0	0	0	0	0	0	0	0	0	0	SS03 ×	SS02 0/1	SS01 0/1	SS00 0/1

Note CSI00 and CSI01 are only available in the 44-pin and 48-pin products of the 78K0R/IC3 and in the 78K0R/ID3 and 78K0R/IE3.

Remark ▒ : Setting disabled (set to the initial value)
×: Bit that cannot be used in this mode (set to the initial value when not used in any mode)
0/1: Set to 0 or 1 depending on the usage of the user

(2) Operation procedure

Figure 13-49. Initial Setting Procedure for Slave Transmission

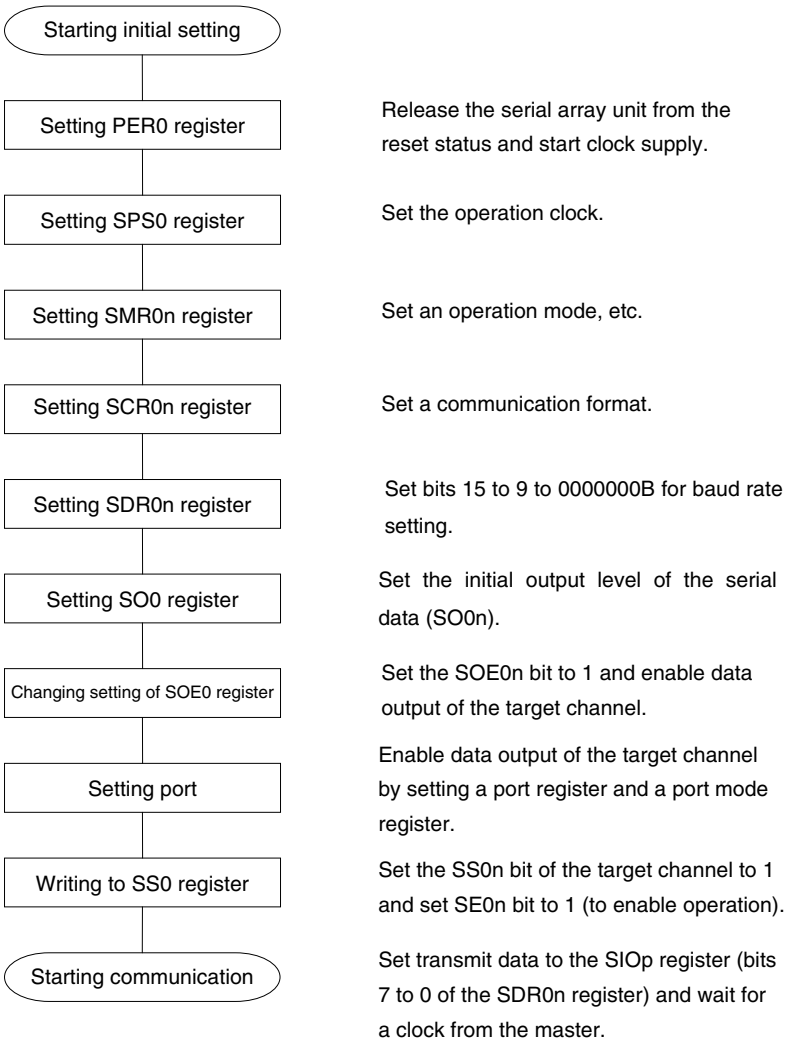

Caution After setting the SAU0EN bit of peripheral enable register 0 (PER0) to 1, be sure to set serial clock select register 0 (SPS0) after 4 or more f_{CLK} clocks have elapsed.

Figure 13-50. Procedure for Stopping Slave Transmission

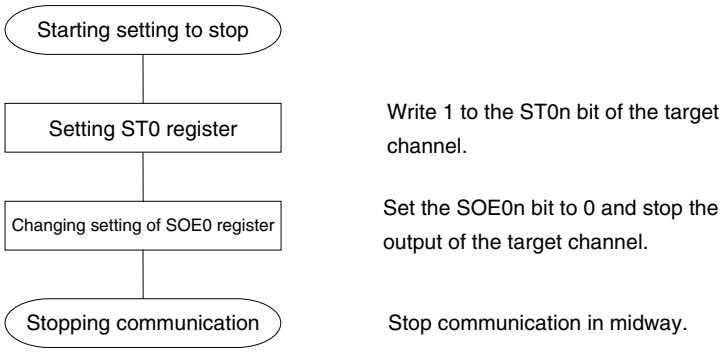

Remark Even after communication is stopped, the pin level is retained. To resume the operation, re-set the SO0 register (see **Figure 13-51 Procedure for Resuming Slave Transmission**).

Figure 13-51. Procedure for Resuming Slave Transmission

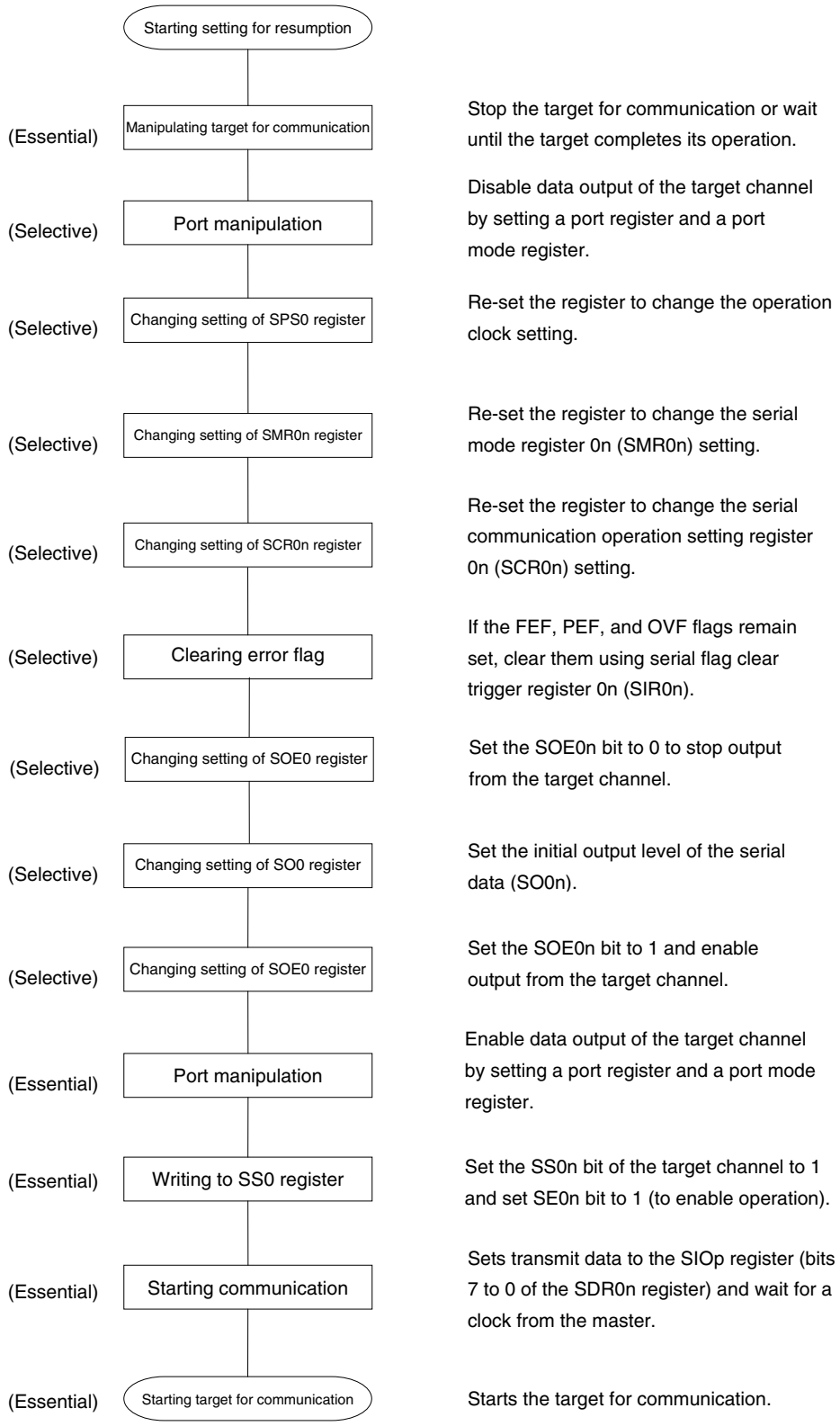

(3) Processing flow (in single-transmission mode)

Figure 13-52. Timing Chart of Slave Transmission (in Single-Transmission Mode)
(Type 1: DAP0n = 0, CKP0n = 0)

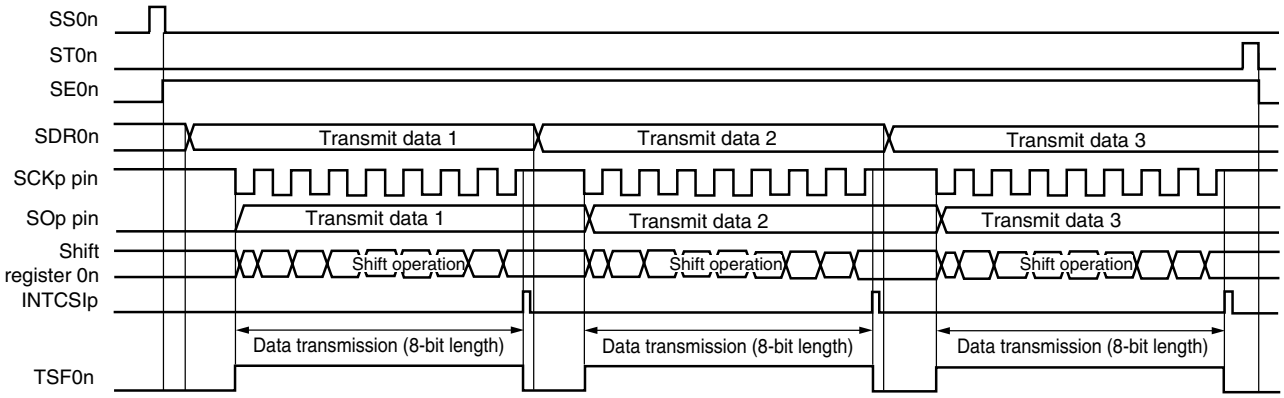

Remark n: Channel number (n = 0 to 2) (n = 2 (78K0R/IB3 and 38-pin products of 78K0R/IC3), n = 0 to 2 (44-pin and 48-pin products of 78K0R/IC3, 78K0R/ID3, and 78K0R/IE3))
p: CSI number (p = 00, 01, 10) (p = 10(78K0R/IB3 and 38-pin products of 78K0R/IC3), p = 00, 01, 10 (44-pin and 48-pin products of 78K0R/IC3, 78K0R/ID3, and 78K0R/IE3))

Figure 13-53. Flowchart of Slave Transmission (in Single-Transmission Mode)

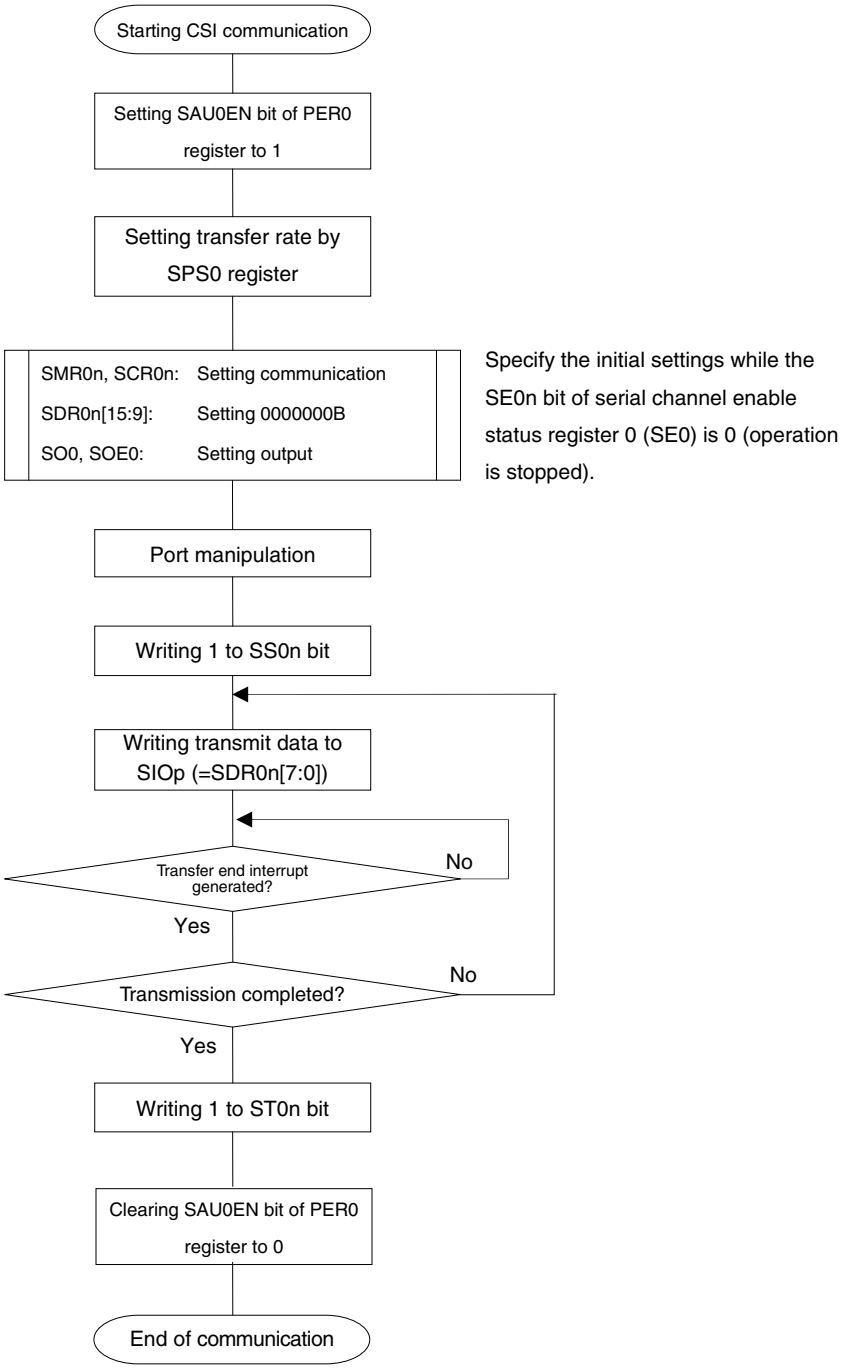

Caution After setting the SAU0EN bit of peripheral enable register 0 (PER0) to 1, be sure to set serial clock select register 0 (SPS0) after 4 or more f_{CLK} clocks have elapsed.

(4) Processing flow (in continuous transmission mode)

Figure 13-54. Timing Chart of Slave Transmission (in Continuous Transmission Mode)
(Type 1: DAP0n = 0, CKP0n = 0)

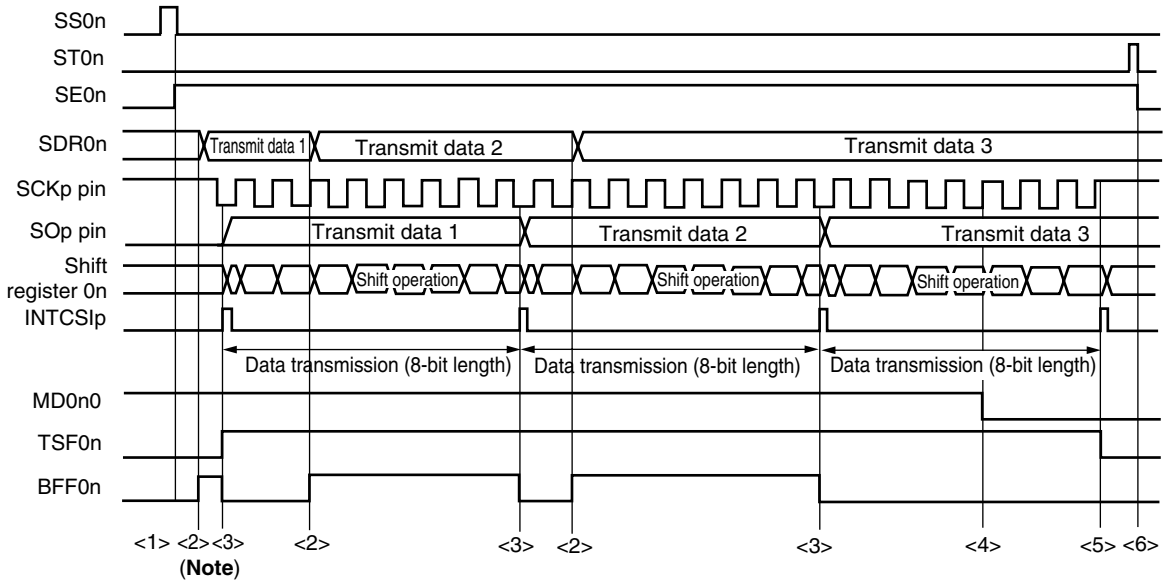

Note If transmit data is written to the SDR0n register while the BFF0n bit of serial status register 0n (SSR0n) is 1 (valid data is stored in serial data register 0n (SDR0n)), the transmit data is overwritten.

Caution **The MD0n0 bit of serial mode register 0n (SMR0n) can be rewritten even during operation. However, rewrite it before transfer of the last bit is started.**

Remark n: Channel number (n = 0 to 2) (n = 2 (78K0R/IB3 and 38-pin products of 78K0R/IC3), n = 0 to 2 (44-pin and 48-pin products of 78K0R/IC3, 78K0R/ID3, and 78K0R/IE3))
p: CSI number (p = 00, 01, 10) (p = 10(78K0R/IB3 and 38-pin products of 78K0R/IC3), p = 00, 01, 10(44-pin and 48-pin products of 78K0R/IC3, 78K0R/ID3, and 78K0R/IE3))

Figure 13-55. Flowchart of Slave Transmission (in Continuous Transmission Mode)

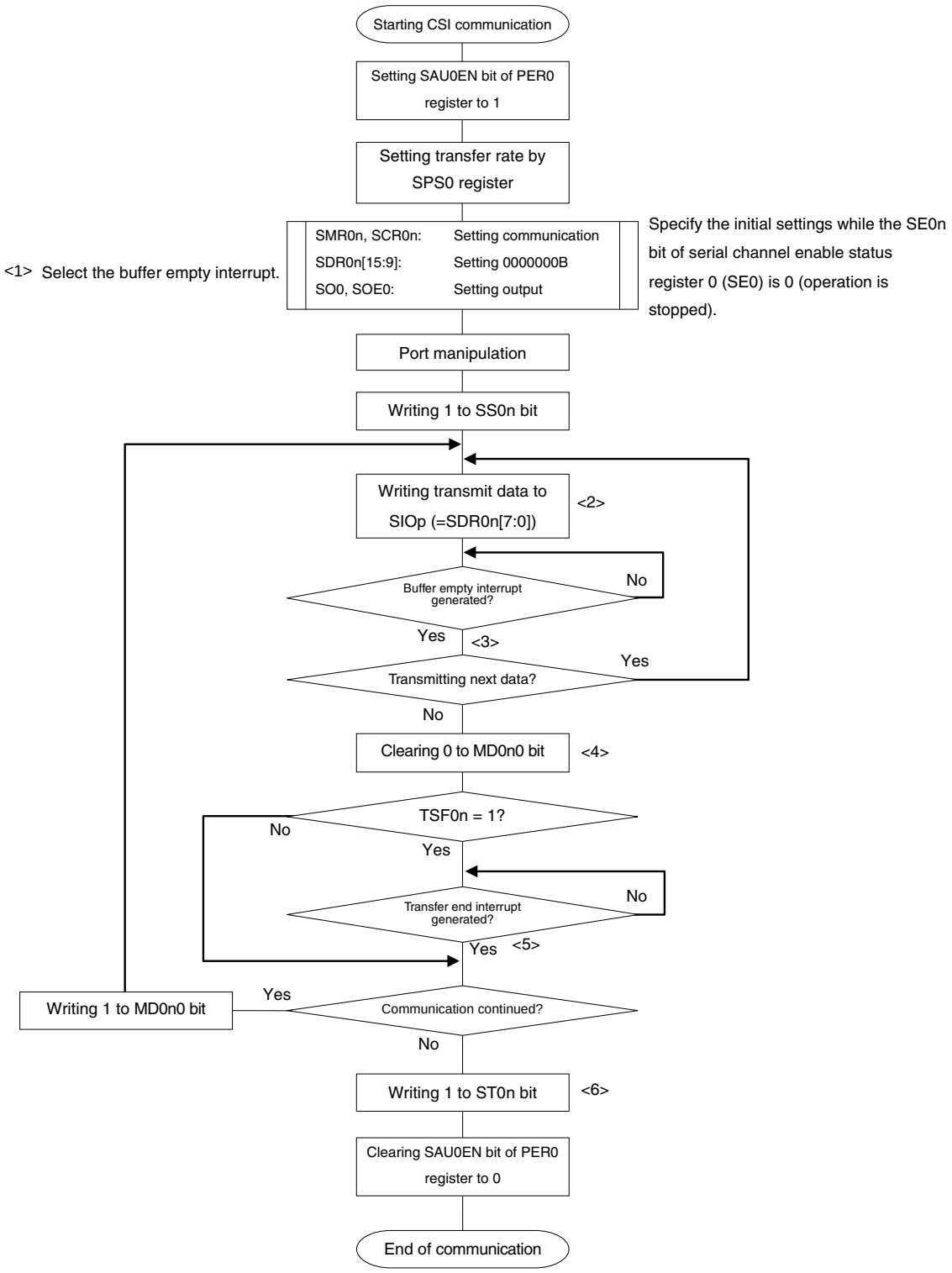

Caution **After setting the SAU0EN bit of peripheral enable register 0 (PER0) to 1, be sure to set serial clock select register 0 (SPS0) after 4 or more f_{CLK} clocks have elapsed.**

Remark <1> to <6> in the figure correspond to <1> to <6> in **Figure 13-54 Timing Chart of Slave Transmission (in Continuous Transmission Mode)**.

13.5.5 Slave reception

Slave reception is that the 78K0R/Ix3 receives data from another device in the state of a transfer clock being input from another device.

3-Wire Serial I/O	CSI00 [Note 1]	CSI01 [Note 1]	CSI10 [Note 1]
Target channel	Channel 0 of SAU	Channel 1 of SAU	Channel 2 of SAU
Pins used	SCK00, SI00	SCK01, SI01	SCK10, SI10
Interrupt	INTCSI00	INTCSI01	INTCSI10
	Transfer end interrupt only (Setting the buffer empty interrupt is prohibited.)		
Error detection flag	Overrun error detection flag (OVF0n) only		
Transfer data length	7 or 8 bits		
Transfer rate	Max. f_{MCK}/6 [Hz] [Notes 2, 3]		
Data phase	Selectable by DAP0n bit of SCR0n register • DAP0n = 0: Data input starts from the start of the operation of the serial clock. • DAP0n = 1: Data input starts half a clock before the start of the serial clock operation.		
Clock phase	Selectable by CKP0n bit of SCR0n register • CKP0n = 0: Forward • CKP0n = 1: Reverse		
Data direction	MSB or LSB first		

Notes 1. CSI00 and CSI01 are only available in the 44-pin and 48-pin products of the 78K0R/IC3 and in the 78K0R/ID3 and 78K0R/IE3.

2. Because the external serial clock input to pins SCK00, SCK01, and SCK10 is sampled internally and used, the fastest transfer rate is the f_{MCK}/6 [Hz] .

3. Use this operation within a range that satisfies the conditions above and the AC characteristics in the electrical specifications (see **CHAPTER 28 ELECTRICAL SPECIFICATIONS**).

Remarks 1. f_{MCK}: Operation clock frequency of target channel

2. n: Channel number (n = 2 (78K0R/IB3 and 38-pin products of 78K0R/IC3), n = 0 to 2 (44-pin and 48-pin products of 78K0R/IC3, 78K0R/ID3, and 78K0R/IE3))

(1) Register setting

Figure 13-56. Example of Contents of Registers for Slave Reception of 3-Wire Serial I/O (CSI00 Note, CSI01 Note, CSI10) (1/2)

(a) Serial mode register 0n (SMR0n)

	15	14	13	12	11	10	9	8	7	6	5	4	3	2	1	0
SMR0n	CKS0n	CCS0n						STS0n		SIS0n0				MD0n2	MD0n1	MD0n0
	0/1	1	0	0	0	0	0	0	0	0	1	0	0	0	0	0

Operation clock (f_{MCK}) of channel n
0: Prescaler output clock CK00 set by SPS0 register
1: Prescaler output clock CK01 set by SPS0 register

Interrupt source of channel n
0: Transfer end interrupt

(b) Serial communication operation setting register 0n (SCR0n)

	15	14	13	12	11	10	9	8	7	6	5	4	3	2	1	0
SCR0n	TXE0n	RXE0n	DAP0n	CKP0n		EOC0n	PTC0n1	PTC0n0	DIR0n		SLC0n1	SLC0n0		DLS0n2	DLS0n1	DLS0n0
	0	1	0/1	0/1	0	0	0	0	0/1	0	0	0	0	1	1	0/1

Selection of the data and clock phase (For details about the setting, see **13.3 Registers Controlling Serial Array Unit**.)

Selection of data transfer sequence
0: Inputs/outputs data with MSB first
1: Inputs/outputs data with LSB first.

Setting of data length
0: 7-bit data length
1: 8-bit data length

(c) Serial data register 0n (SDR0n) (lower 8 bits: SIOp)

	15	14	13	12	11	10	9	8	7	6	5	4	3	2	1	0
SDR0n	0000000 Baud rate setting							0	Receive data							

SIOp

(d) Serial output register 0 (SO0) …The Register that not used in this mode.

	15	14	13	12	11	10	9	8	7	6	5	4	3	2	1	0
SO0						CKO02	CKO01	CKO00						SO02	SO01	SO00
	0	0	0	0	1	×	× Note	× Note	0	0	0	0	1	×	× Note	×

Note CSI00 and CSI01 are only available in the 44-pin and 48-pin products of the 78K0R/IC3 and in the 78K0R/ID3 and 78K0R/IE3.

Remark n: Channel number (n = 0 to 2) (n = 2 (78K0R/IB3 and 38-pin products of 78K0R/IC3), n = 0 to 2 (44-pin and 48-pin products of 78K0R/IC3, 78K0R/ID3, and 78K0R/IE3))
p: CSI number (p = 00, 01, 10) (p = 10(78K0R/IB3 and 38-pin products of 78K0R/IC3), p = 00, 01, 10(44-pin and 48-pin products of 78K0R/IC3, 78K0R/ID3, and 78K0R/IE3))
□: Setting is fixed in the CSI slave reception mode, ■: Setting disabled (set to the initial value)
×: Bit that cannot be used in this mode (set to the initial value when not used in any mode)
0/1: Set to 0 or 1 depending on the usage of the user

Figure 13-56. Example of Contents of Registers for Slave Reception of 3-Wire Serial I/O (CSI00 Note, CSI01 Note, CSI10) (2/2)

(e) Serial output enable register 0 (SOE0) …The Register that not used in this mode.

	15	14	13	12	11	10	9	8	7	6	5	4	3	2	1	0
SOE0	0	0	0	0	0	0	0	0	0	0	0	0	0	SOE02 ×	SOE01 × Note	SOE00 ×

(f) Serial channel start register 0 (SS0) … Sets only the bits of the target channel to 1.

	15	14	13	12	11	10	9	8	7	6	5	4	3	2	1	0
SS0	0	0	0	0	0	0	0	0	0	0	0	0	SS03 ×	SS02 0/1	SS01 0/1	SS00 0/1

Note CSI00 and CSI01 are only available in the 44-pin and 48-pin products of the 78K0R/IC3 and in the 78K0R/ID3 and 78K0R/IE3.

Remark ▒ : Setting disabled (set to the initial value)
×: Bit that cannot be used in this mode (set to the initial value when not used in any mode)
0/1: Set to 0 or 1 depending on the usage of the user

(2) Operation procedure

Figure 13-57. Initial Setting Procedure for Slave Reception

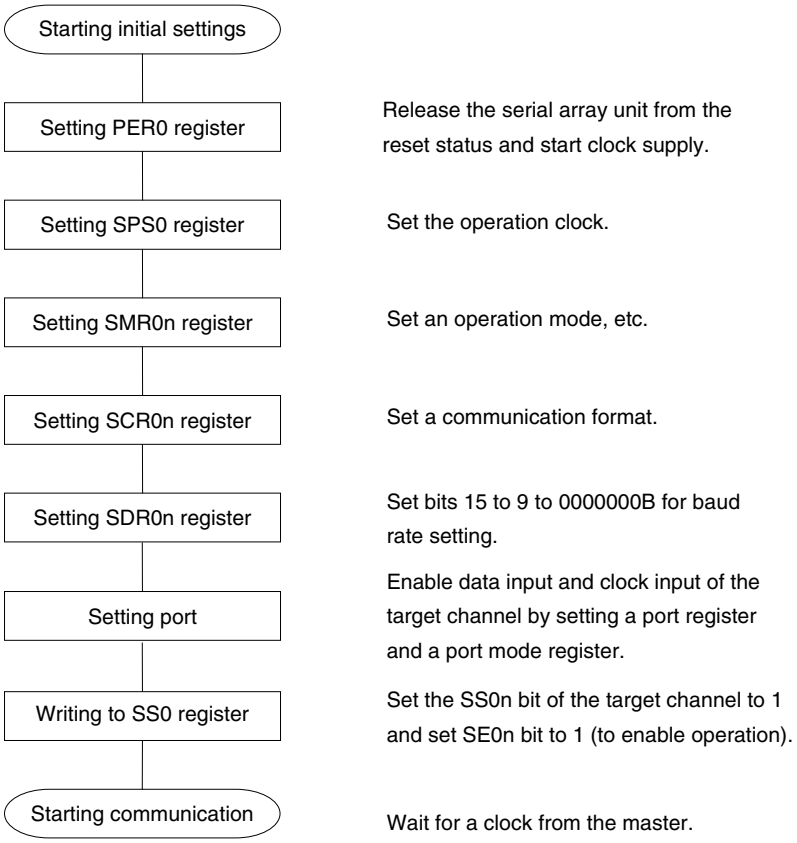

Caution After setting the SAU0EN bit of peripheral enable register 0 (PER0) to 1, be sure to set serial clock select register 0 (SPS0) after 4 or more f_{CLK} clocks have elapsed.

Figure 13-58. Procedure for Stopping Slave Reception

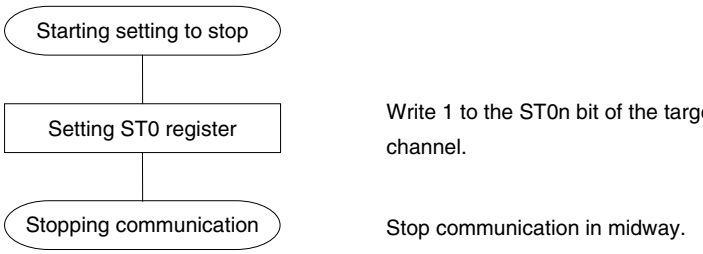

Figure 13-59. Procedure for Resuming Slave Reception

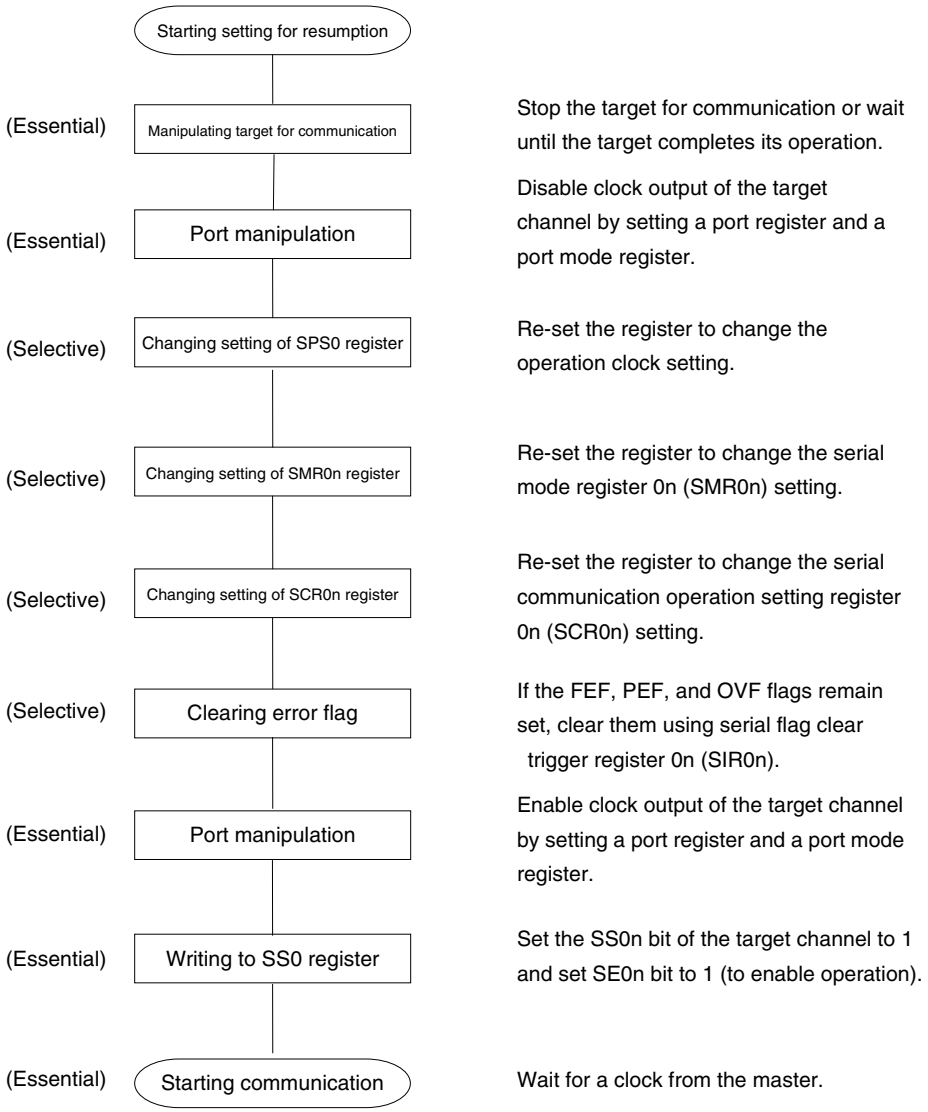

(3) Processing flow (in single-reception mode)

Figure 13-60. Timing Chart of Slave Reception (in Single-Reception Mode)
(Type 1: DAP0n = 0, CKP0n = 0)

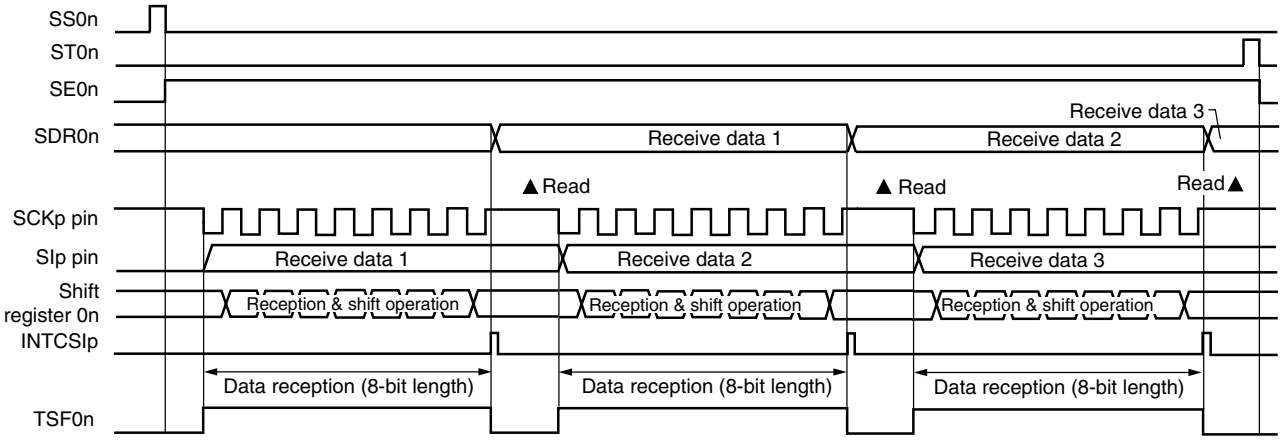

Remark n: Channel number (n = 0 to 2) (n = 2 (78K0R/IB3 and 38-pin products of 78K0R/IC3), n = 0 to 2 (44-pin and 48-pin products of 78K0R/IC3, 78K0R/ID3, and 78K0R/IE3))
p: CSI number (p = 00, 01, 10) (p = 10(78K0R/IB3 and 38-pin products of 78K0R/IC3), p = 00, 01, 10 (44-pin and 48-pin products of 78K0R/IC3, 78K0R/ID3, and 78K0R/IE3))

Figure 13-61. Flowchart of Slave Reception (in Single-Reception Mode)

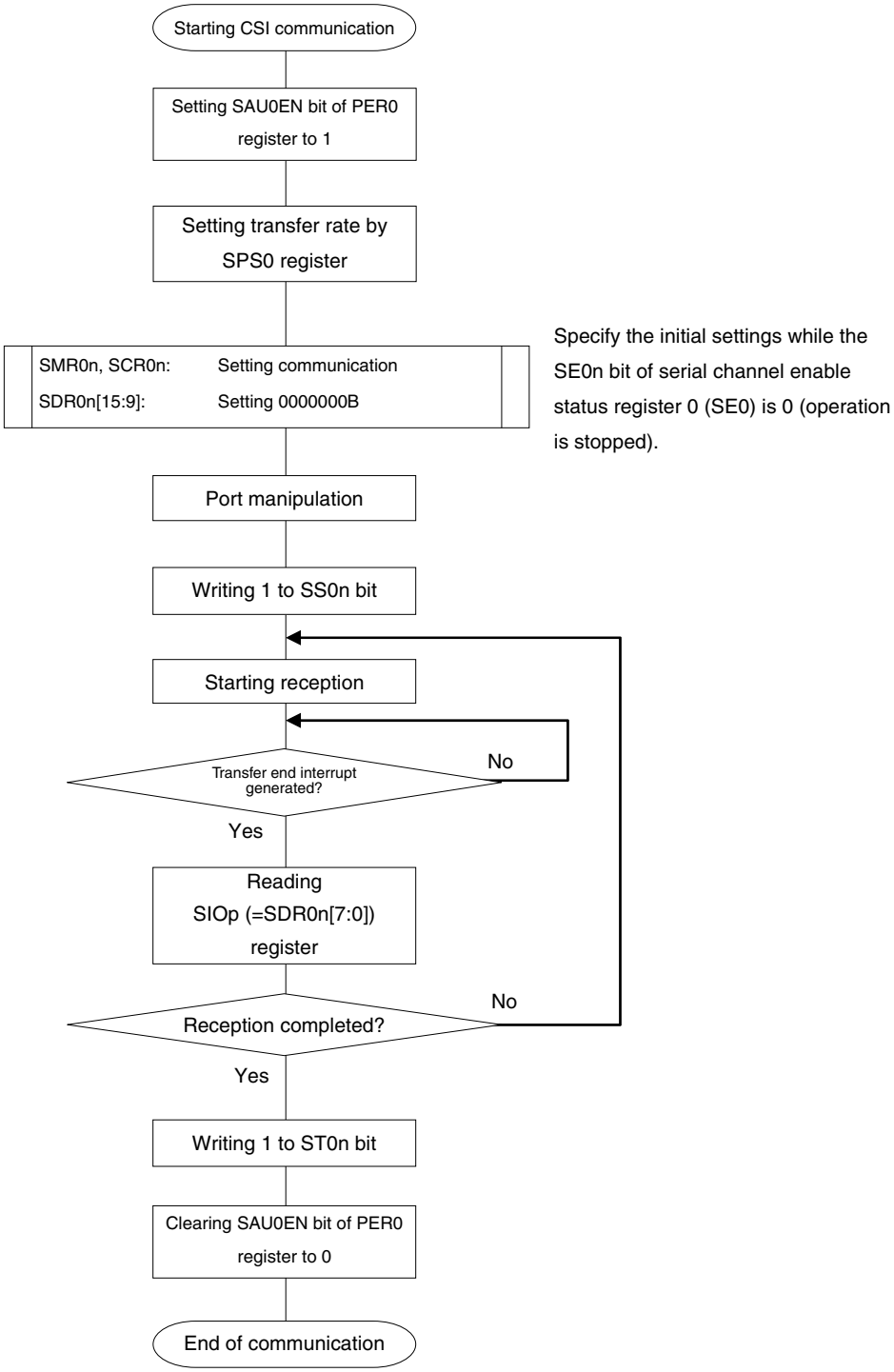

Caution After setting the SAU0EN bit of peripheral enable register 0 (PER0) to 1, be sure to set serial clock select register 0 (SPS0) after 4 or more f_{CLK} clocks have elapsed.

13.5.6 Slave transmission/reception

Slave transmission/reception is that the 78K0R/Ix3 transmits/receives data to/from another device in the state of a transfer clock being input from another device.

3-Wire Serial I/O	CSI00 [Note 1]	CSI01 [Note 1]	CSI10
Target channel	Channel 0 of SAU	Channel 1 of SAU	Channel 2 of SAU
Pins used	SCK00, SI00, SO00	SCK01, SI01, SO01	SCK10, SI10, SO10
Interrupt	INTCSI00	INTCSI01	INTCSI10
	Transfer end interrupt (in single-transfer mode) or buffer empty interrupt (in continuous transfer mode) can be selected.		
Error detection flag	Overrun error detection flag (OVF0n) only		
Transfer data length	7 or 8 bits		
Transfer rate	Max. f_{MCK}/6 [Hz] [Notes 2, 3]		
Data phase	Selectable by DAP0n bit of SCR0n register • DAP0n = 0: Data I/O starts from the start of the operation of the serial clock. • DAP0n = 1: Data I/O starts half a clock before the start of the serial clock operation.		
Clock phase	Selectable by CKP0n bit of SCR0n register • CKP0n = 0: Forward • CKP0n = 1: Reverse		
Data direction	MSB or LSB first		

Notes 1. CSI00 and CSI01 are only available in the 44-pin and 48-pin products of the 78K0R/IC3 and in the 78K0R/ID3 and 78K0R/IE3.

2. Because the external serial clock input to pins SCK00, SCK01, and SCK10 is sampled internally and used, the fastest transfer rate is f_{MCK}/6 [Hz].

3. Use this operation within a range that satisfies the conditions above and the AC characteristics in the electrical specifications (see **CHAPTER 28 ELECTRICAL SPECIFICATIONS**).

Remarks 1. f_{MCK}: Operation clock frequency of target channel

2. n: Channel number (n = 0 to 2) (n = 2 (78K0R/IB3 and 38-pin products of 78K0R/IC3), n = 0 to 2 (44-pin and 48-pin products of 78K0R/IC3, 78K0R/ID3, and 78K0R/IE3))

(1) Register setting

Figure 13-62. Example of Contents of Registers for Slave Transmission/Reception of 3-Wire Serial I/O (CSI00 Note, CSI01 Note, CSI10) (1/2)

(a) Serial mode register 0n (SMR0n)

	15	14	13	12	11	10	9	8	7	6	5	4	3	2	1	0
SMR0n	CKS0n 0/1	CCS0n 1	0	0	0	0	0	STS0n 0	0	SIS0n0 0	1	0	0	MD0n2 0	MD0n1 0	MD0n0 0/1

Operation clock (f_{MCK}) of channel n
0: Prescaler output clock CK00 set by SPS0 register
1: Prescaler output clock CK01 set by SPS0 register

Interrupt source of channel n
0: Transfer end interrupt
1: Buffer empty interrupt

(b) Serial communication operation setting register 0n (SCR0n)

	15	14	13	12	11	10	9	8	7	6	5	4	3	2	1	0
SCR0n	TXE0n 1	RXE0n 1	DAP0n 0/1	CKP0n 0/1	0	EOC0n 0	PTC0n1 0	PTC0n0 0	DIR0n 0/1	0	SLC0n1 0	SLC0n0 0	0	DLS0n2 1	DLS0n1 1	DLS0n0 0/1

Selection of the data and clock phase (For details about the setting, see **13.3 Registers Controlling Serial Array Unit**.)

Selection of data transfer sequence
0: Inputs/outputs data with MSB first
1: Inputs/outputs data with LSB first.

Setting of data length
0: 7-bit data length
1: 8-bit data length

(c) Serial data register 0n (SDR0n) (lower 8 bits: SIOp)

	15	14	13	12	11	10	9	8	7	6	5	4	3	2	1	0
SDR0n	0000000 Baud rate setting							0	Transmit data setting/receive data register							

SIOp

(d) Serial output register 0 (SO0) … Sets only the bits of the target channel.

	15	14	13	12	11	10	9	8	7	6	5	4	3	2	1	0
SO0	0	0	0	0	1	CKO02 ×	CKO01 × Note	CKO00 × Note	0	0	0	0	1	SO02 0/1	SO01 0/1 Note	SO00 0/1

Note CSI00 and CSI01 are only available in the 44-pin and 48-pin products of the 78K0R/IC3 and in the 78K0R/ID3 and 78K0R/IE3.

Remark n: Channel number (n = 0 to 2) (n = 2 (78K0R/IB3 and 38-pin products of 78K0R/IC3), n = 0 to 2 (44-pin and 48-pin products of 78K0R/IC3, 78K0R/ID3, and 78K0R/IE3))
p: CSI number (p = 00, 01, 10) (p = 10(78K0R/IB3 and 38-pin products of 78K0R/IC3), p = 00, 01, 10 (44-pin and 48-pin products of 78K0R/IC3, 78K0R/ID3, and 78K0R/IE3))
□: Setting is fixed in the CSI slave transmission/reception mode ■: Setting disabled (set to the initial value)
×: Bit that cannot be used in this mode (set to the initial value when not used in any mode)
0/1: Set to 0 or 1 depending on the usage of the user

Figure 13-62. Example of Contents of Registers for Slave Transmission/Reception of 3-Wire Serial I/O (CSI00 Note, CSI01 Note, CSI10) (2/2)

(e) Serial output enable register 0 (SOE0) … Sets only the bits of the target channel to 1.

	15	14	13	12	11	10	9	8	7	6	5	4	3	2	1	0
SOE0	0	0	0	0	0	0	0	0	0	0	0	0	0	SOE02 0/1	SOE01 0/1 Note	SOE00 0/1

(f) Serial channel start register 0 (SS0) … Sets only the bits of the target channel to 1.

	15	14	13	12	11	10	9	8	7	6	5	4	3	2	1	0
SS0	0	0	0	0	0	0	0	0	0	0	0	0	SS03 ×	SS02 0/1	SS01 0/1	SS00 0/1

Note CSI00 and CSI01 are only available in the 44-pin and 48-pin products of the 78K0R/IC3 and in the 78K0R/ID3 and 78K0R/IE3.

Remark ▒: Setting disabled (set to the initial value)
×: Bit that cannot be used in this mode (set to the initial value when not used in any mode)
0/1: Set to 0 or 1 depending on the usage of the user

(2) Operation procedure

Figure 13-63. Initial Setting Procedure for Slave Transmission/Reception

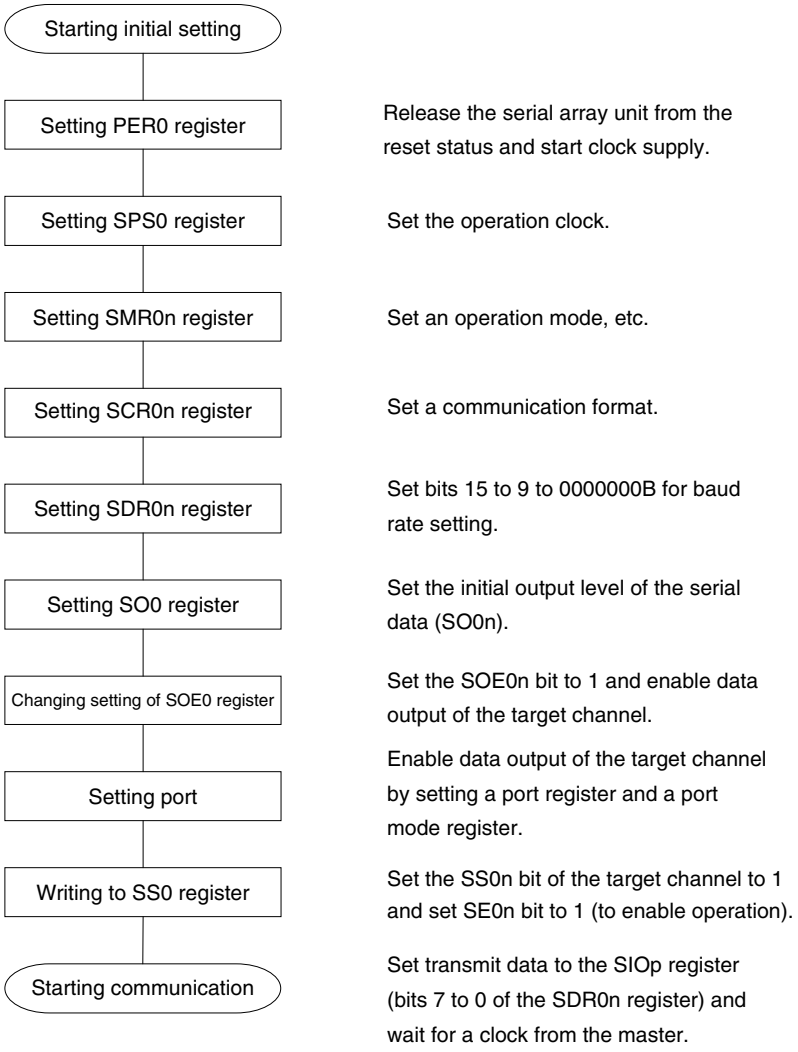

Caution After setting the SAU0EN bit of peripheral enable register 0 (PER0) to 1, be sure to set serial clock select register 0 (SPS0) after 4 or more f_{CLK} clocks have elapsed.

Figure 13-64. Procedure for Stopping Slave Transmission/Reception

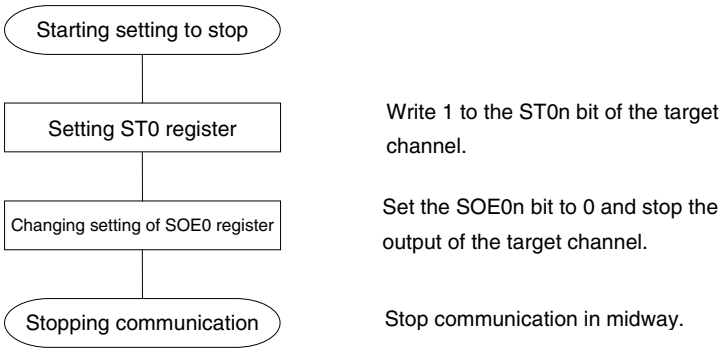

Remark Even after communication is stopped, the pin level is retained. To resume the operation, re-set the serial output register 0 (SO0) (see **Figure 13-65 Procedure for Resuming Slave Transmission/Reception**).

Figure 13-65. Procedure for Resuming Slave Transmission/Reception

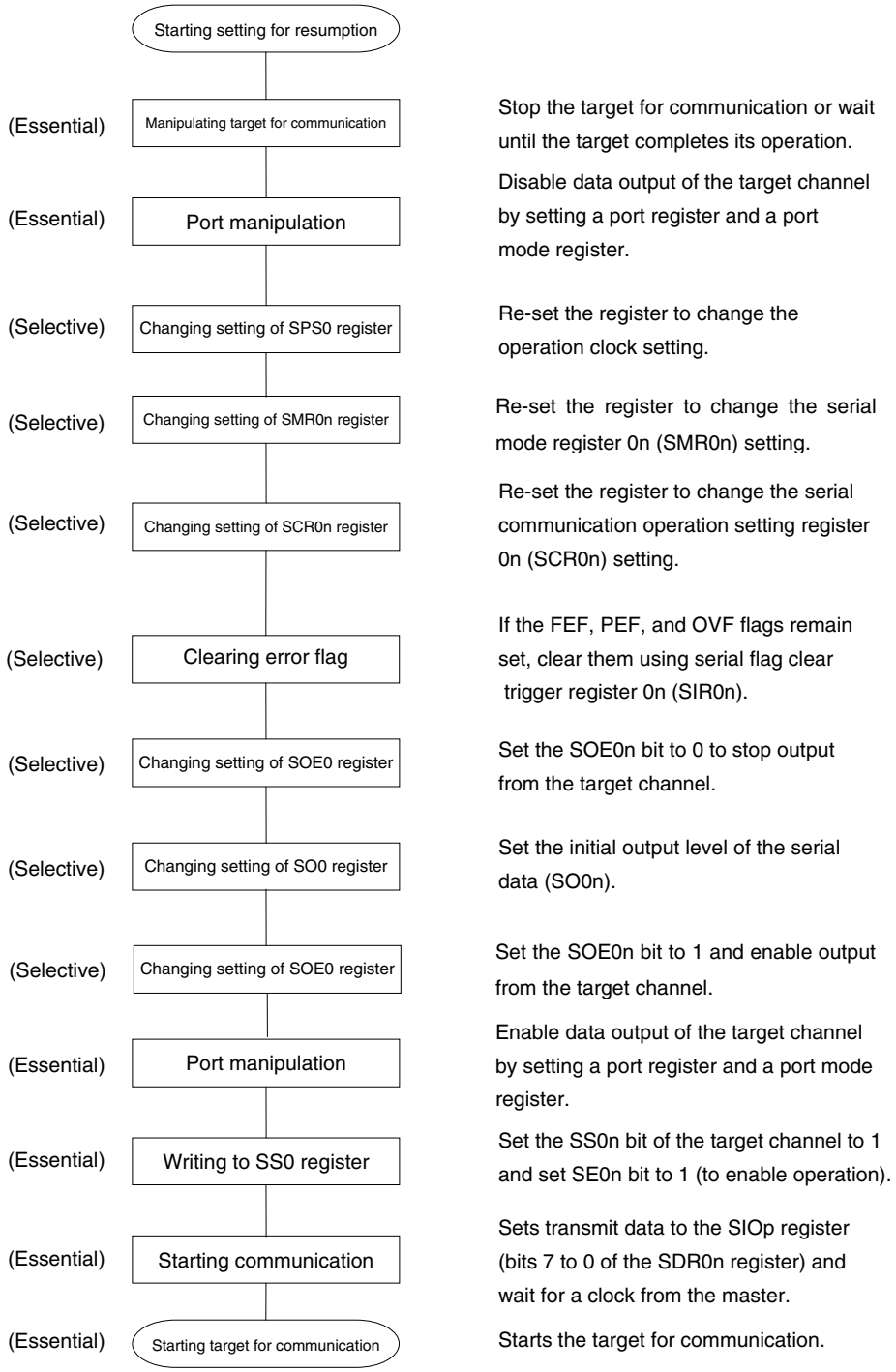

(3) Processing flow (in single-transmission/reception mode)

Figure 13-66. Timing Chart of Slave Transmission/Reception (in Single-Transmission/Reception Mode) (Type 1: DAP0n = 0, CKP0n = 0)

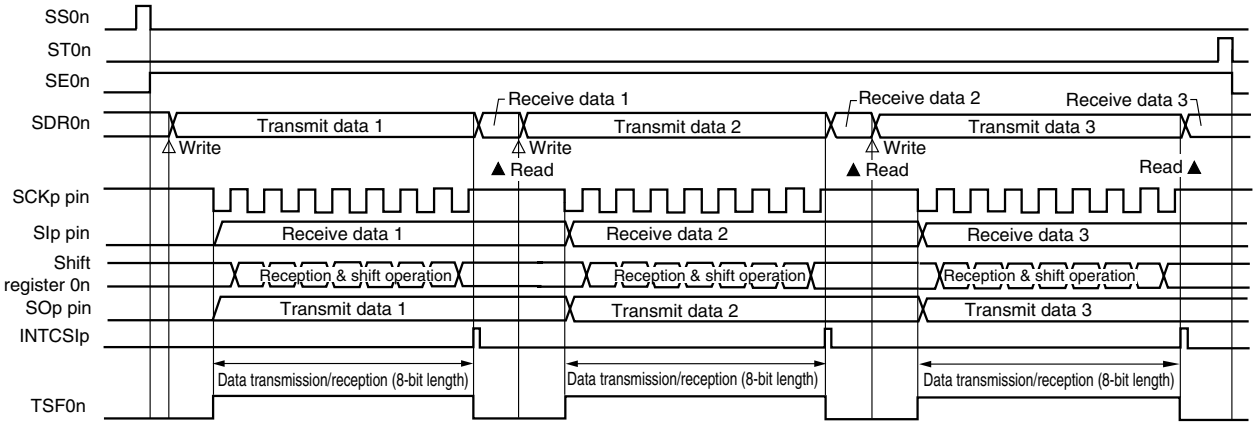

Remark n: Channel number (n = 0 to 2) (n = 2 (78K0R/IB3 and 38-pin products of 78K0R/IC3), n = 0 to 2 (44-pin and 48-pin products of 78K0R/IC3, 78K0R/ID3, and 78K0R/IE3))
p: CSI number (p = 00, 01, 10) (p = 10(78K0R/IB3 and 38-pin products of 78K0R/IC3), p = 00, 01, 10 (44-pin and 48-pin products of 78K0R/IC3, 78K0R/ID3, and 78K0R/IE3))

Figure 13-67. Flowchart of Slave Transmission/Reception (in Single- Transmission/Reception Mode)

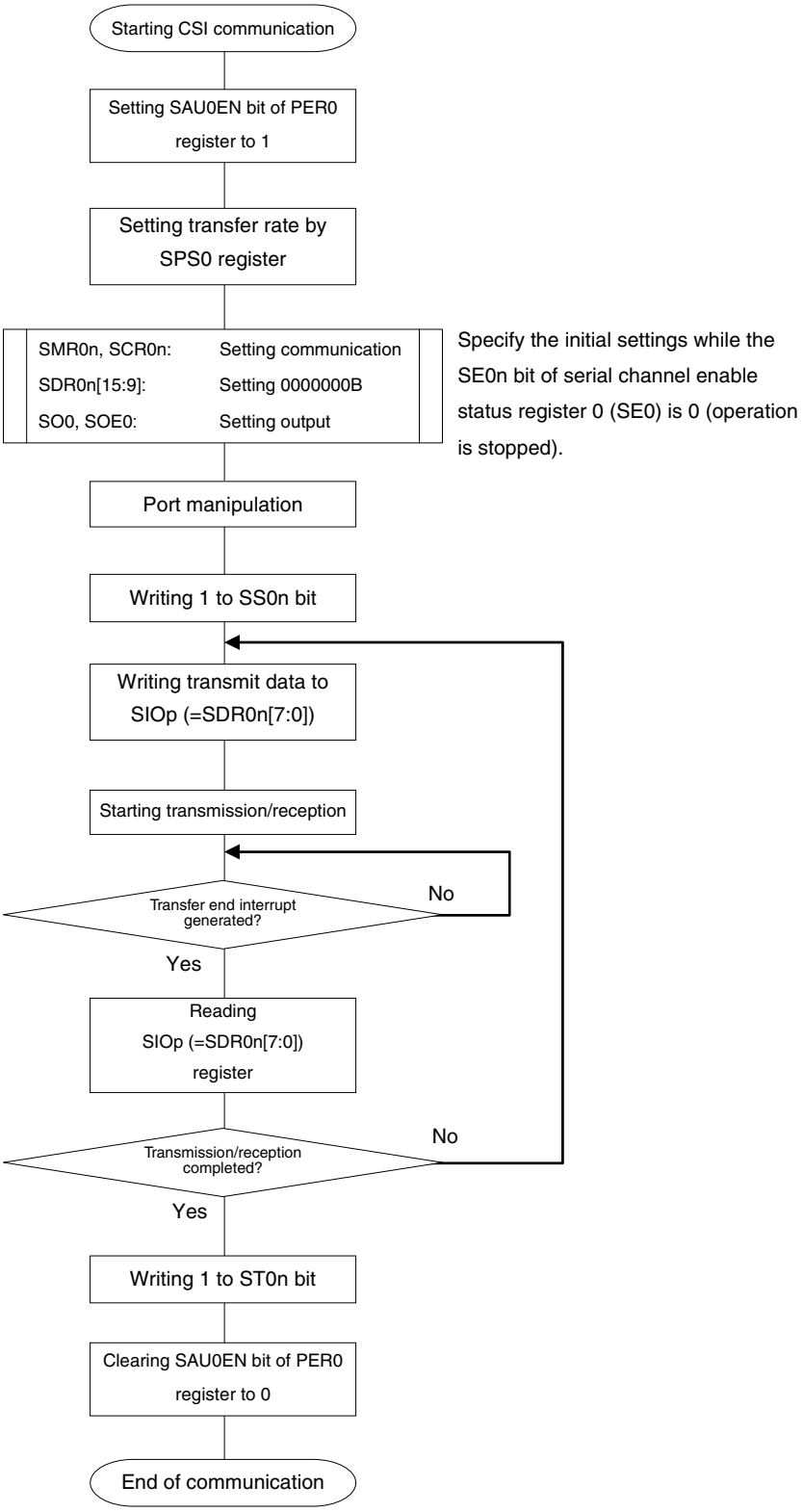

Caution After setting the SAU0EN bit of peripheral enable register 0 (PER0) to 1, be sure to set serial clock select register 0 (SPS0) after 4 or more f_{CLK} clocks have elapsed.

(4) Processing flow (in continuous transmission/reception mode)

Figure 13-68. Timing Chart of Slave Transmission/Reception (in Continuous Transmission/Reception Mode) (Type 1: DAP0n = 0, CKP0n = 0)

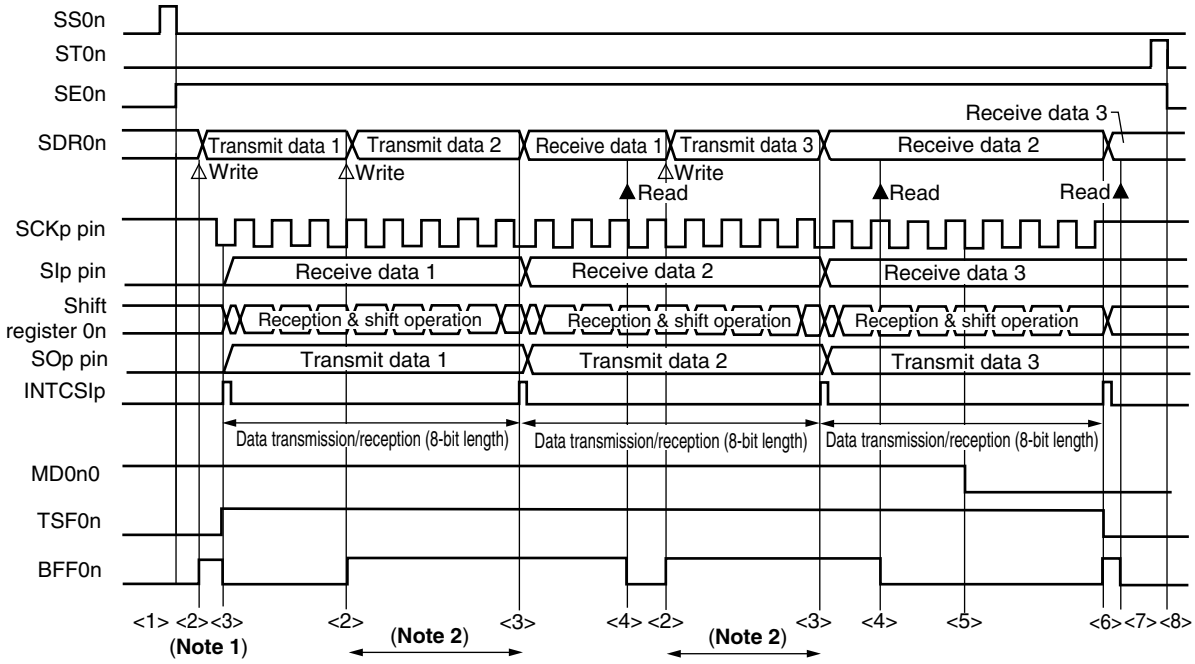

Notes 1. If transmit data is written to the SDR0n register while the BFF0n bit of serial status register 0n (SSR0n) is 1 (valid data is stored in serial data register 0n (SDR0n)), the transmit data is overwritten.

2. The transmit data can be read by reading the SDR0n register during this period. At this time, the transfer operation is not affected.

Caution The MD0n0 bit of serial mode register 0n (SMR0n) bit can be rewritten even during operation. However, rewrite it before transfer of the last bit is started, so that it has been rewritten before the transfer end interrupt of the last transmit data.

Remarks 1. <1> to <8> in the figure correspond to <1> to <8> in **Figure 13-69 Flowchart of Slave Transmission/Reception (in Continuous Transmission/Reception Mode)**.

2. n: Channel number (n = 0 to 2) (n = 2 (78K0R/IB3 and 38-pin products of 78K0R/IC3), n = 0 to 2 (44-pin and 48-pin products of 78K0R/IC3, 78K0R/ID3, and 78K0R/IE3))

p: CSI number (p = 00, 01, 10) (p = 10(78K0R/IB3 and 38-pin products of 78K0R/IC3), p = 00, 01, 10 (44-pin and 48-pin products of 78K0R/IC3, 78K0R/ID3, and 78K0R/IE3))

Figure 13-69. Flowchart of Slave Transmission/Reception (in Continuous Transmission/Reception Mode)

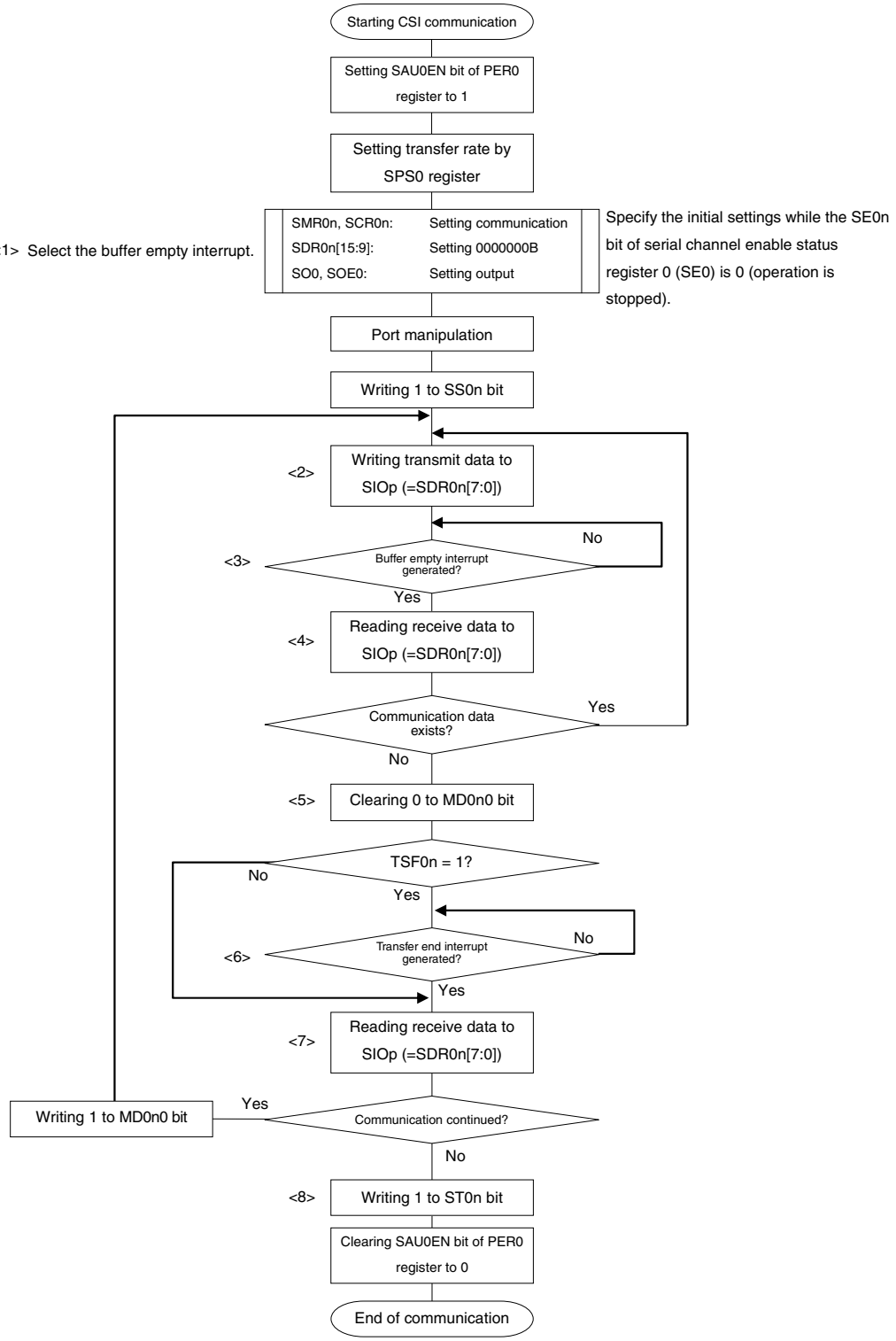

Caution **After setting the SAU0EN bit of peripheral enable register 0 (PER0) to 1, be sure to set serial clock select register 0 (SPS0) after 4 or more f_{CLK} clocks have elapsed.**

Remark <1> to <8> in the figure correspond to <1> to <8> in **Figure 13-68 Timing Chart of Slave Transmission/Reception (in Continuous Transmission/Reception Mode).**

13.5.7 Calculating transfer clock frequency

The transfer clock frequency for 3-wire serial I/O (CSI00[Note 1], CSI01[Note 1], CSI10) communication can be calculated by the following expressions.

(1) Master

(Transfer clock frequency) = {Operation clock (f_{MCK}) frequency of target channel} ÷ (SDR0n[15:9] + 1) ÷ 2 [Hz]

(2) Slave

(Transfer clock frequency) = {Frequency of serial clock (SCK) supplied by master}[Note] [Hz]

Note 1. CSI00 and CSI01 are only available in the 44-pin and 48-pin versions of the 78K0R/IC3 and in the 78K0R/ID3 and 78K0R/IE3.

2 The permissible maximum transfer clock frequency is f_{MCK}/6.

Remarks 1. The value of SDR0n[15:9] is the value of bits 15 to 9 of the serial data register 0n (SDR0n) (0000000B to 1111111B) and therefore is 0 to 127.

2. n: Channel number (n = 2(78K0R/IB3 and 38-pin products of 78K0R/IC3), n = 0 to 2 (44-pin and 48-pin products of 78K0R/IC3, 78K0R/ID3, and 78K0R/IE3))

The operation clock (f_{MCK}) is determined by serial clock select register 0 (SPS0) and bit 15 (CKS0n) of serial mode register 0n (SMR0n).

Table 13-2. Selection of Operation Clock

SMR0n Register	SPS0 Register								Operation Clock (f_{MCK}) Note 1	
CKS0n	PRS 013	PRS 012	PRS 011	PRS 010	PRS 003	PRS 002	PRS 001	PRS 000		f_{CLK} = 20 MHz
0	X	X	X	X	0	0	0	0	f_{CLK}	20 MHz
	X	X	X	X	0	0	0	1	$f_{CLK}/2$	10 MHz
	X	X	X	X	0	0	1	0	$f_{CLK}/2^2$	5 MHz
	X	X	X	X	0	0	1	1	$f_{CLK}/2^3$	2.5 MHz
	X	X	X	X	0	1	0	0	$f_{CLK}/2^4$	1.25 MHz
	X	X	X	X	0	1	0	1	$f_{CLK}/2^5$	625 kHz
	X	X	X	X	0	1	1	0	$f_{CLK}/2^6$	313 kHz
	X	X	X	X	0	1	1	1	$f_{CLK}/2^7$	156 kHz
	X	X	X	X	1	0	0	0	$f_{CLK}/2^8$	78.1 kHz
	X	X	X	X	1	0	0	1	$f_{CLK}/2^9$	39.1 kHz
	X	X	X	X	1	0	1	0	$f_{CLK}/2^{10}$	19.5 kHz
	X	X	X	X	1	0	1	1	$f_{CLK}/2^{11}$	9.77 kHz
	X	X	X	X	1	1	1	1	INTTM02 Note2	
1	0	0	0	0	X	X	X	X	f_{CLK}	20 MHz
	0	0	0	1	X	X	X	X	$f_{CLK}/2$	10 MHz
	0	0	1	0	X	X	X	X	$f_{CLK}/2^2$	5 MHz
	0	0	1	1	X	X	X	X	$f_{CLK}/2^3$	2.5 MHz
	0	1	0	0	X	X	X	X	$f_{CLK}/2^4$	1.25 MHz
	0	1	0	1	X	X	X	X	$f_{CLK}/2^5$	625 kHz
	0	1	1	0	X	X	X	X	$f_{CLK}/2^6$	313 kHz
	0	1	1	1	X	X	X	X	$f_{CLK}/2^7$	156 kHz
	1	0	0	0	X	X	X	X	$f_{CLK}/2^8$	78.1 kHz
	1	0	0	1	X	X	X	X	$f_{CLK}/2^9$	39.1 kHz
	1	0	1	0	X	X	X	X	$f_{CLK}/2^{10}$	19.5 kHz
	1	0	1	1	X	X	X	X	$f_{CLK}/2^{11}$	9.77 kHz
	1	1	1	1	X	X	X	X	INTTM02 Note2	
Other than above									Setting prohibited	

Notes 1. When changing the clock selected for f_{CLK} (by changing the system clock control register (CKC) value), do so after having stopped (serial channel stop register 0 (ST0) = 000FH) the operation of the serial array unit (SAU). When selecting INTTM02 for the operation clock, also stop the timer array unit TAUS (timer channel stop register 0 (TT0) = 00FFH).

2. SAU can be operated at a fixed division ratio of the subsystem clock, regardless of the f_{CLK} frequency (main system clock and sub system clock), by operating the interval timer for which $f_{SUB}/4$ has been selected as the count clock (setting TIS02 bit of the timer input select register 0 (TIS0) to 1) and selecting INTTM02 by using the serial clock select register 0 (SPS0) in channel 2 of TAUS. When changing f_{CLK}, however, SAU and TAUS must be stopped as described in Note 1 above.

Remarks 1. X: Don't care

2. n: Channel number (n = 2(78K0R/IB3 and 38-pin products of 78K0R/IC3), n = 0 to 2 (44-pin and 48-pin products of 78K0R/IC3, 78K0R/ID3, and 78K0R/IE3))

13.5.8 Procedure for processing errors that occurred during 3-wire serial I/O (CSI00, CSI01, CSI10) communication

The procedure for processing errors that occurred during 3-wire serial I/O (CSI00, CSI01, CSI10) communication is described in Figure 13-70.

Figure 13-70. Processing Procedure in Case of Overrun Error

Software Manipulation	Hardware Status	Remark
Reads serial data register 0n (SDR0n). →	The BFF0n bit of the SSR0n register is set to 0 and channel n is enabled to receive data.	This is to prevent an overrun error if the next reception is completed during error processing.
Reads serial status register 0n (SSR0n).		Error type is identified and the read value is used to clear error flag.
Writes 1 to serial flag clear trigger register 0n (SIR0n). →	Error flag is cleared.	Error can be cleared only during reading, by writing the value read from the SSR0n register to the SIR0n register without modification.

Remark n: Channel number (n = 2 (78K0R/IB3 and 38-pin products of 78K0R/IC3), n = 0 to 2 (44-pin and 48-pin products of 78K0R/IC3, 78K0R/ID3, and 78K0R/IE3)).

13.6 Operation of UART (UART0, UART1) Communication

This is a start-stop synchronization function using two lines: serial data transmission (TxD) and serial data reception (RxD) lines. By using these two communication lines, each data frame, which consist of a start bit, data, parity bit, and stop bit, is transferred asynchronously (using the internal baud rate) between the microcontroller and the other communication party. Full-duplex UART communication can be performed by using a channel dedicated to transmission (even-numbered channel) and a channel dedicated to reception (odd-numbered channel). The LIN-bus can be implemented by using timer array unit TAUS with an external interrupt (INTP0).

[Data transmission/reception]
- Data length of 5, 7, or 8 bits
- Select the MSB/LSB first
- Level setting of transmit/receive data and select of reverse
- Parity bit appending and parity check functions
- Stop bit appending

[Interrupt function]
- Transfer end interrupt/buffer empty interrupt
- Error interrupt in case of framing error, parity error, or overrun error

[Error detection flag]
- Framing error, parity error, or overrun error

The LIN-bus is supported in UART0 (0, 1 channels of unit)
[LIN-bus functions]
- Wakeup signal detection
- Sync break field (SBF) detection
- Sync field measurement, baud rate calculation

UART0 uses channels 0 and 1 of SAU.
UART1 uses channels 2 and 3 of SAU.

Channel	Used as CSI	Used as UART	Used as Simplified I^2C
0	CSI00 Note	UART0 (supporting LIN-bus)	–
1	CSI01 Note		–
2	CSI10	UART1	IIC10
3	–		–

Note CSI00 and CSI01 are only available in the 44-pin and 48-pin products of the 78K0R/IC3 and in the 78K0R/ID3 and 78K0R/IE3.

Caution When using serial array unit as UARTs, the channels of both the transmitting side (even-number channel) and the receiving side (odd-number channel) can be used only as UARTs.

UART performs the following four types of communication operations.
- UART transmission (See **13.6.1**.)
- UART reception (See **13.6.2**.)
- LIN transmission (UART0 only) (See **13.6.3**.)
- LIN reception (UART0 only) (See **13.6.4**.)

13.6.1 UART transmission

UART transmission is an operation to transmit data from the 78K0R/Ix3 to another device asynchronously (start-stop synchronization).

Of two channels used for UART, the even channel is used for UART transmission.

UART	UART0	UART1
Target channel	Channel 0 of SAU	Channel 2 of SAU
Pins used	TxD0	TxD1
Interrupt	INTST0	INTST1
	Transfer end interrupt (in single-transfer mode) or buffer empty interrupt (in continuous transfer mode) can be selected.	
Error detection flag	None	
Transfer data length	5, 7, or 8 bits	
Transfer rate	Max. $f_{MCK}/6$ [bps] (SDR0n [15:9] = 2 or more), Min. $f_{CLK}/(2 \times 2^{11} \times 128)$ [bps] Note	
Data phase	Forward output (default: high level) Reverse output (default: low level)	
Parity bit	The following selectable • No parity bit • Appending 0 parity • Appending even parity • Appending odd parity	
Stop bit	The following selectable • Appending 1 bit • Appending 2 bits	
Data direction	MSB or LSB first	

Note Use this operation within a range that satisfies the conditions above and the AC characteristics in the electrical specifications (see **CHAPTER 28 ELECTRICAL SPECIFICATIONS**).

Remarks 1. f_{MCK}: Operation clock frequency of target channel
f_{CLK}: System clock frequency
2. n: Channel number (n = 0, 2)

(1) Register setting

Figure 13-71. Example of Contents of Registers for UART Transmission of UART (UART0, UART1) (1/2)

(a) Serial mode register 0n (SMR0n)

	15	14	13	12	11	10	9	8	7	6	5	4	3	2	1	0
SMR0n	CKS0n 0/1	CCS0n 0	0	0	0	0	0	STS0n 0	0	SIS0n0 0	1	0	0	MD0n2 0	MD0n1 1	MD0n0 0/1

Operation clock (f_{MCK}) of channel n
0: Prescaler output clock CK00 set by SPS0 register
1: Prescaler output clock CK01 set by SPS0 register

Interrupt source of channel n
0: Transfer end interrupt
1: Buffer empty interrupt

(b) Serial communication operation setting register 0n (SCR0n)

	15	14	13	12	11	10	9	8	7	6	5	4	3	2	1	0
SCR0n	TXE0n 1	RXE0n 0	DAP0n 0	CKP0n 0	0	EOC0n 0	PTC0n1 0/1	PTC0n0 0/1	DIR0n 0/1	0	SLC0n1 0/1	SLC0n0 0/1	0	DLS0n2 1	DLS0n1 0/1	DLS0n0 0/1

Setting of parity bit
00B: No parity
01B: Appending 0 parity
10B: Appending Even parity
11B: Appending Odd parity

Selection of data transfer sequence
0: Inputs/outputs data with MSB first
1: Inputs/outputs data with LSB first.

Setting of stop bit
01B: Appending 1 bit
10B: Appending 2 bits

(c) Serial data register 0n (SDR0n) (lower 8 bits: TXDq)

	15	14	13	12	11	10	9	8	7	6	5	4	3	2	1	0
SDR0n	Baud rate setting							0	Transmit data setting							

TXDq

(d) Serial output level register 0 (SOL0) … Sets only the bits of the target channel.

	15	14	13	12	11	10	9	8	7	6	5	4	3	2	1	0
SOL0	0	0	0	0	0	0	0	0	0	0	0	0	0	SOL02 0/1	0	SOL00 0/1

0: Forward (normal) transmission
1: Reverse transmission

Remark n: Channel number (n = 0, 2), q: UART number (q = 0, 1)
□ : Setting is fixed in the UART transmission mode, ■ : Setting disabled (fixed by hardware)
0/1: Set to 0 or 1 depending on the usage of the user

Figure 13-71. Example of Contents of Registers for UART Transmission of UART (UART0, UART1) (2/2)

(e) Serial output register 0 (SO0) … Sets only the bits of the target channel to 1.

	15	14	13	12	11	10	9	8	7	6	5	4	3	2	1	0
SO0	0	0	0	0	1	CKO02 ×	CKO01 × Note 1	CKO00 × Note 1	0	0	0	0	1	SO02 0/1 Note 2	SO01 × Note 1	SO00 0/1 Note 2

0: Serial data output value is “0”
1: Serial data output value is “1”

(f) Serial output enable register 0 (SOE0) … Sets only the bits of the target channel to 1.

	15	14	13	12	11	10	9	8	7	6	5	4	3	2	1	0
SOE0	0	0	0	0	0	0	0	0	0	0	0	0	0	SOE02 0/1	SOE01 × Note 1	SOE00 0/1

(g) Serial channel start register 0 (SS0) … Sets only the bits of the target channel to 1.

	15	14	13	12	11	10	9	8	7	6	5	4	3	2	1	0
SS0	0	0	0	0	0	0	0	0	0	0	0	0	SS03 ×	SS02 0/1	SS01 ×	SS00 0/1

Notes 1. CSI00 and CSI01 are only available in the 44-pin and 48-pin products of the 78K0R/IC3 and in the 78K0R/ID3 and 78K0R/IE3.

2. Before transmission is started, be sure to set to 1 when the SOL0n bit of the target channel is set to 0, and set to 0 when the SOL0n bit of the target channel is set to 1. The value varies depending on the communication data during communication operation.

Remark ▢ : Setting disabled (fixed by hardware)
×: Bit that cannot be used in this mode (set to the initial value when not used in any mode)
0/1: Set to 0 or 1 depending on the usage of the user

(2) Operation procedure

Figure 13-72. Initial Setting Procedure for UART Transmission

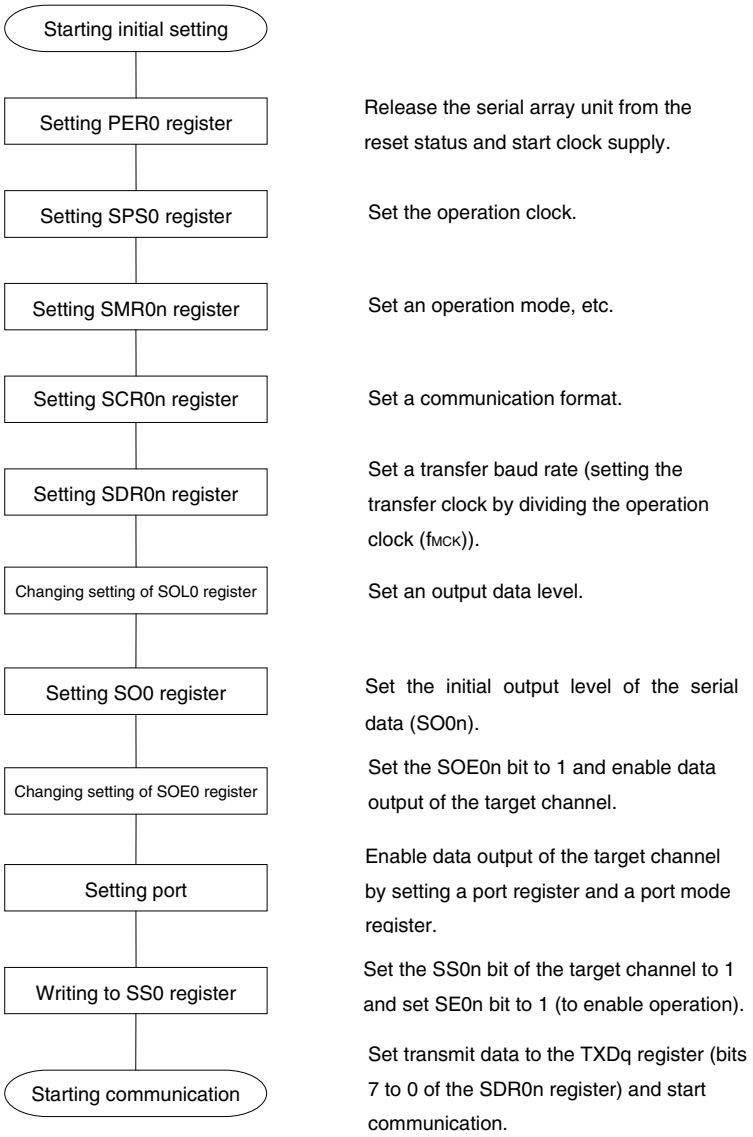

Caution After setting the SAU0EN bit of peripheral enable register 0 (PER0) to 1, be sure to set serial clock select register 0 (SPS0) after 4 or more f_{CLK} clocks have elapsed.

Figure 13-73. Procedure for Stopping UART Transmission

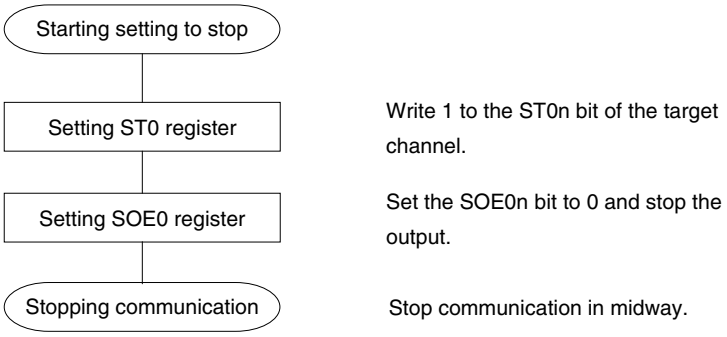

Remark Even after communication is stopped, the pin level is retained. To resume the operation, re-set the serial output register 0 (SO0) (see **Figure 13-74 Procedure for Resuming UART Transmission**).

Figure 13-74. Procedure for Resuming UART Transmission

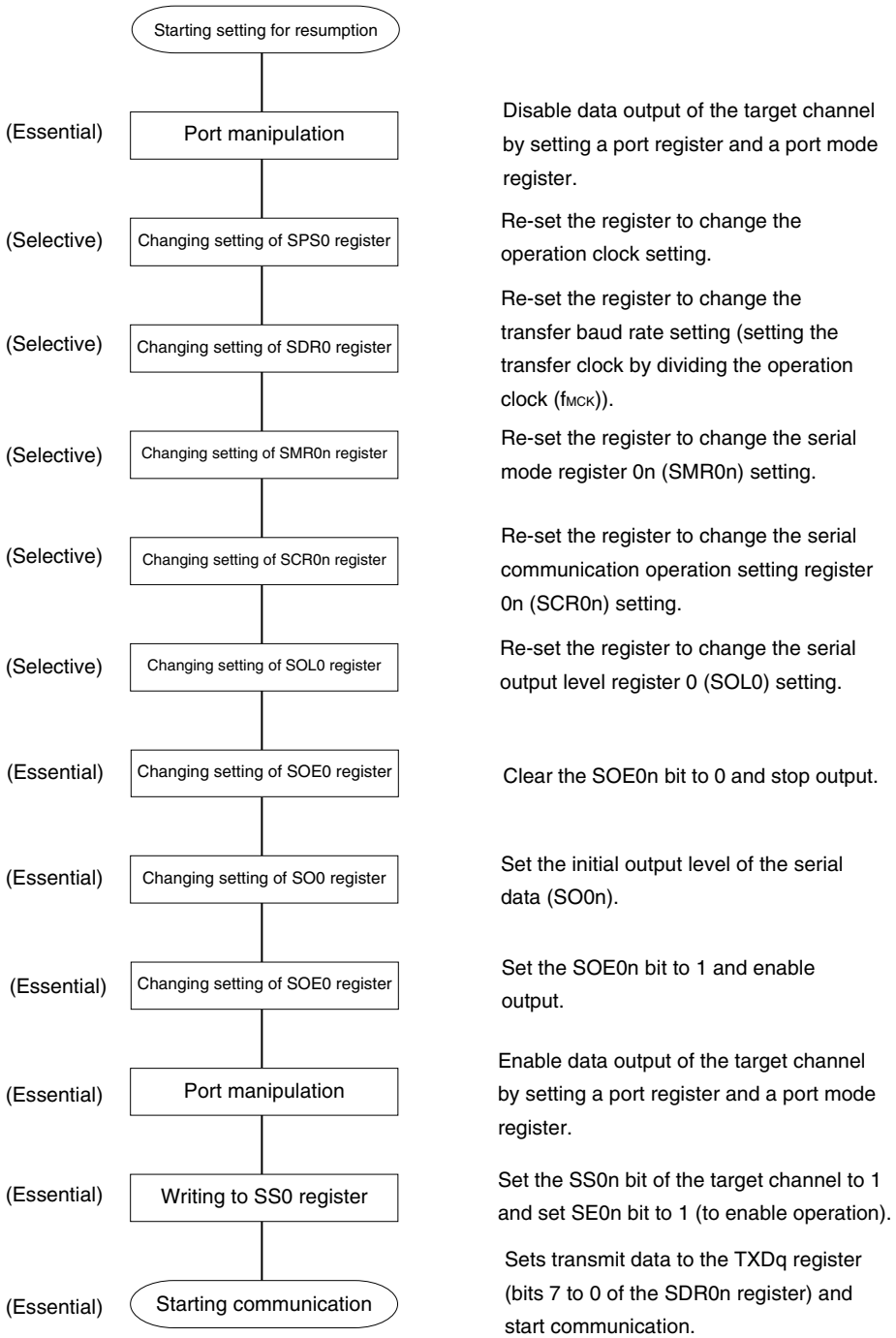

(3) Processing flow (in single-transmission mode)

Figure 13-75. Timing Chart of UART Transmission (in Single-Transmission Mode)

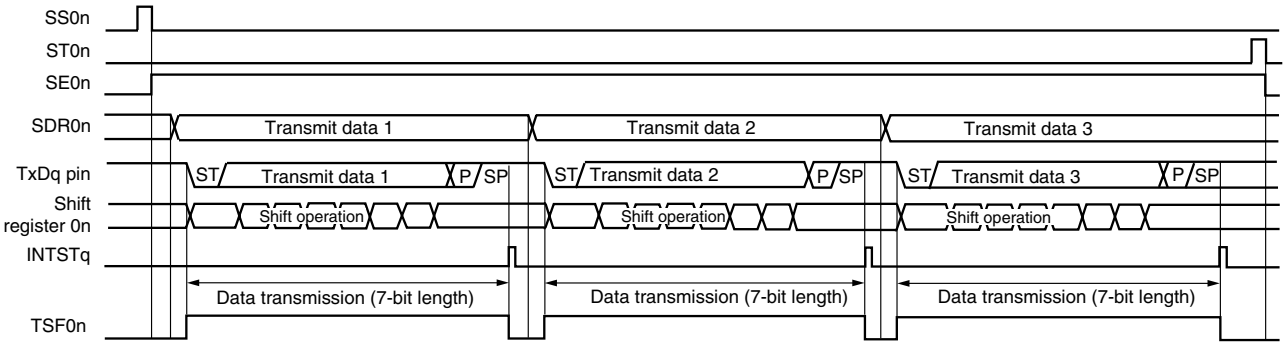

Remark n: Channel number (n = 0, 2), q: UART number (q = 0, 1)

Figure 13-76. Flowchart of UART Transmission (in Single-Transmission Mode)

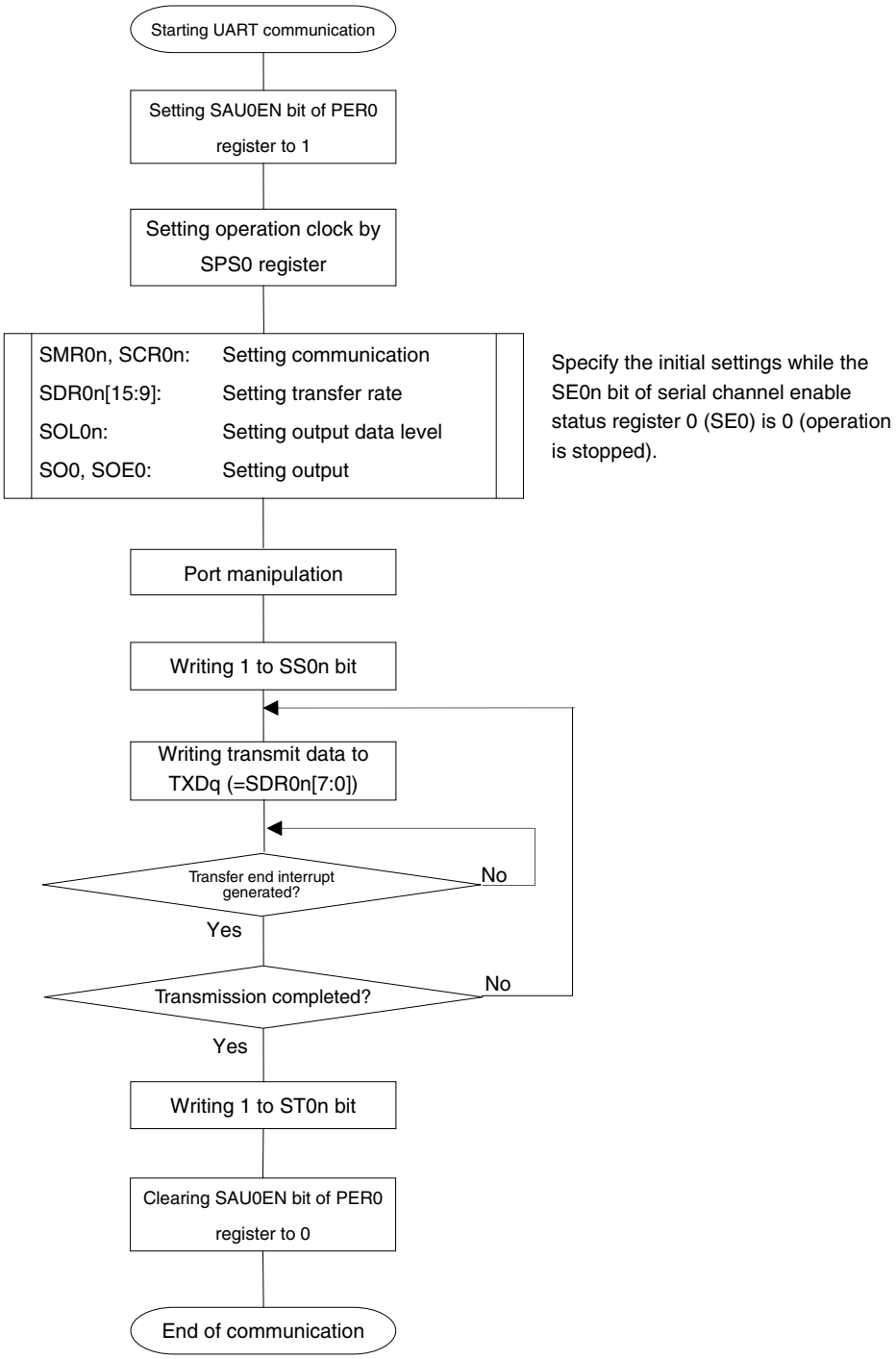

Caution **After setting SAU0EN bit of the peripheral enable register 0 (PER0) to 1, be sure to set serial clock select register 0 (SPS0) after 4 or more f_{CLK} clocks have elapsed.**

(4) Processing flow (in continuous transmission mode)

Figure 13-77. Timing Chart of UART Transmission (in Continuous Transmission Mode)

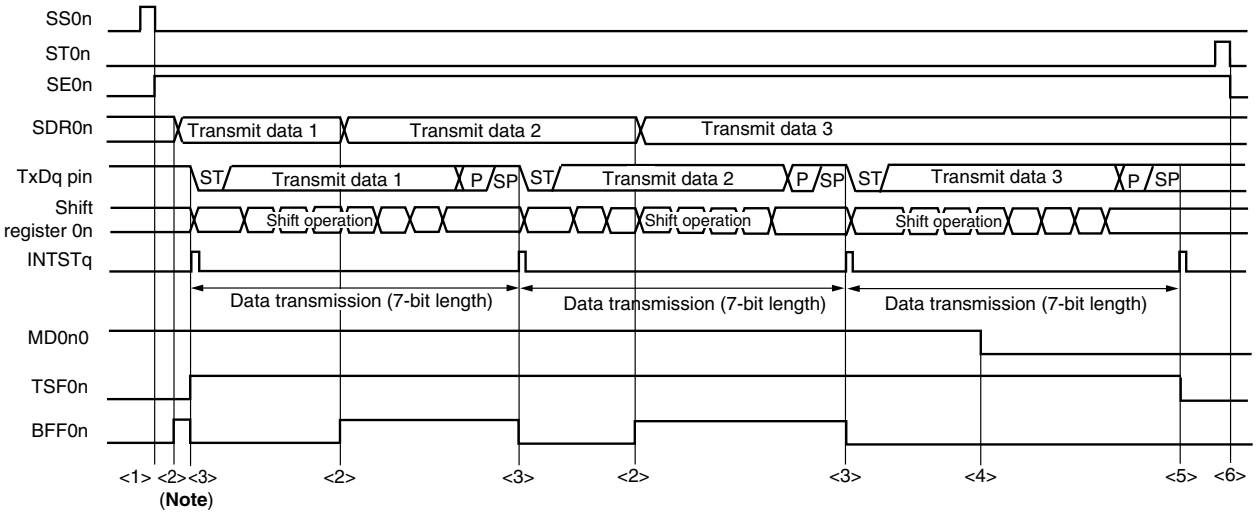

Note If transmit data is written to the SDR0n register while the BFF0n bit of serial status register 0n (SSR0n) is 1 (valid data is stored in serial data register 0n (SDR0n)), the transmit data is overwritten.

Caution The MD0n0 bit of serial mode register 0n (SMR0n) can be rewritten even during operation. However, rewrite it before transfer of the last bit is started, so that it will be rewritten before the transfer end interrupt of the last transmit data.

Remark n: Channel number (n = 0, 2), q: UART number (q = 0, 1)

Figure 13-78. Flowchart of UART Transmission (in Continuous Transmission Mode)

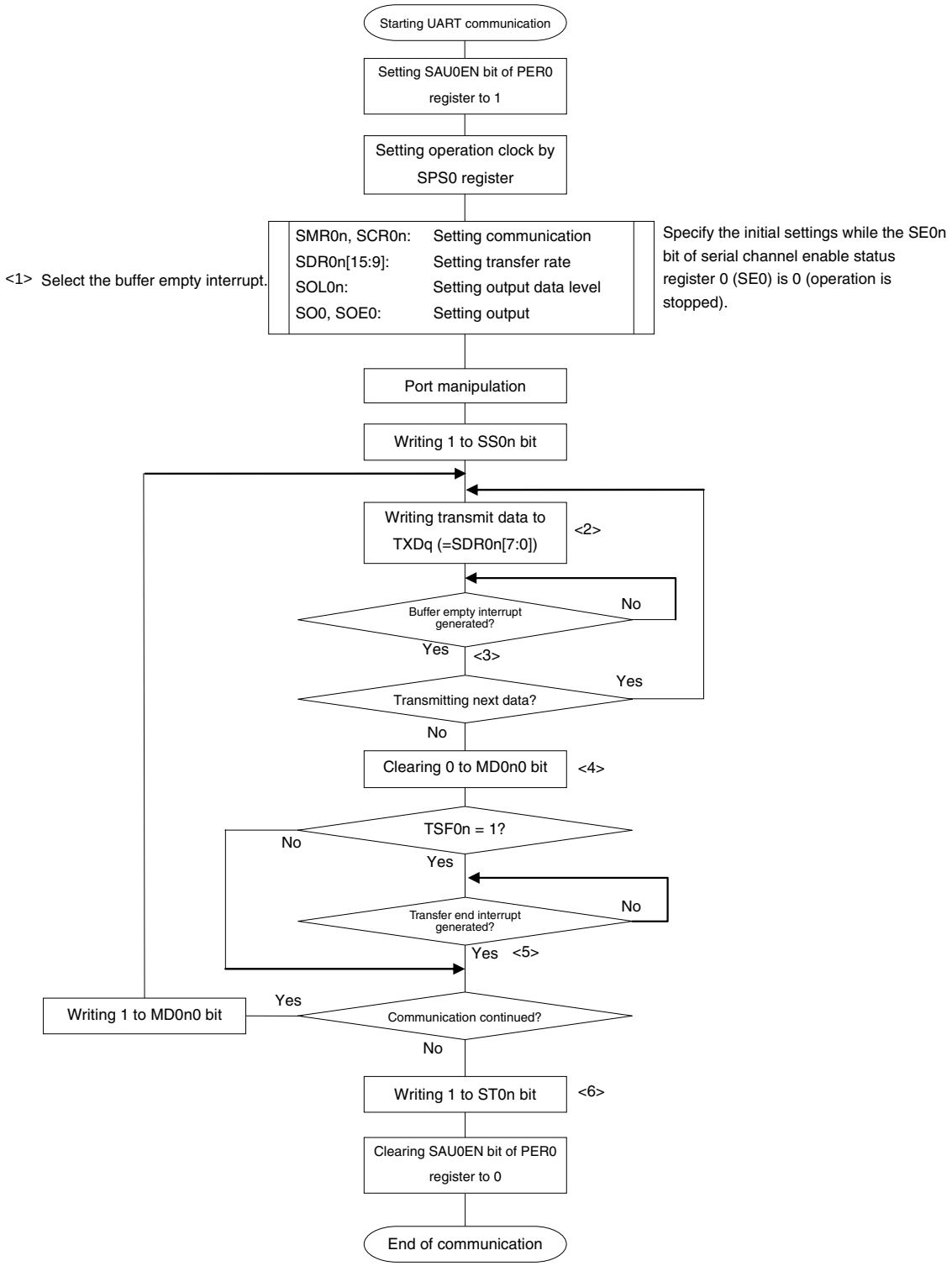

Caution After setting SAU0EN bit of the peripheral enable register 0 (PER0) to 1, be sure to set serial clock select register 0 (SPS0) after 4 or more f_{CLK} clocks have elapsed.

Remark <1> to <6> in the figure correspond to <1> to <6> in **Figure 13-77 Timing Chart of UART Transmission (in Continuous Transmission Mode)**.

13.6.2 UART reception

UART reception is an operation wherein the 78K0R/Ix3 asynchronously receives data from another device (start-stop synchronization).

For UART reception, the odd-number channel of the two channels used for UART is used. The SMR register of both the odd- and even-numbered channels must be set.

UART	UART0	UART1
Target channel	Channel 1 of SAU	Channel 3 of SAU
Pins used	RxD0	RxD1
Interrupt	INTSR0	INTSR1
	Transfer end interrupt only (Setting the buffer empty interrupt is prohibited.)	
Error interrupt	INTSRE0	INTSRE1
Error detection flag	• Framing error detection flag (FEF0n) • Parity error detection flag (PEF0n) • Overrun error detection flag (OVF0n)	
Transfer data length	5, 7 or 8 bits	
Transfer rate	Max. $f_{MCK}/6$ [bps] (SDR0n [15:9] = 2 or more), Min. $f_{CLK}/(2 \times 2^{11} \times 128)$ [bps] Note	
Data phase	Forward output (default: high level) Reverse output (default: low level)	
Parity bit	The following selectable • No parity bit (no parity check) • Appending 0 parity (no parity check) • Appending even parity • Appending odd parity	
Stop bit	Appending 1 bit	
Data direction	MSB or LSB first	

Note Use this operation within a range that satisfies the conditions above and the AC characteristics in the electrical specifications (see **CHAPTER 28 ELECTRICAL SPECIFICATIONS**).

Remarks 1. f_{MCK}: Operation clock frequency of target channel
f_{CLK}: System clock frequency
2. n: Channel number (n = 1, 3)

(1) Register setting

Figure 13-79. Example of Contents of Registers for UART Reception of UART (UART0, UART1) (1/2)

(a) Serial mode register 0n (SMR0n)

	15	14	13	12	11	10	9	8	7	6	5	4	3	2	1	0
SMR0n	CKS0n 0/1	CCS0n 0	0	0	0	0	0	STS0n 1	0	SIS0n0 0/1	1	0	0	MD0n2 0	MD0n1 1	MD0n0 0

Operation clock (f_{MCK}) of channel n
0: Prescaler output clock CK00 set by SPS0 register
1: Prescaler output clock CK01 set by SPS0 register

0: Forward (normal) reception
1: Reverse reception

Interrupt source of channel n
0: Transfer end interrupt

(b) Serial mode register 0r (SMR0r)

	15	14	13	12	11	10	9	8	7	6	5	4	3	2	1	0
SMR0r	CKS0r 0/1	CCS0r 0	0	0	0	0	0	STS0r 0	0	SIS0r0 0	1	0	0	MD0r2 0	MD0r1 1	MD0r0 0/1

Same setting value as CKS0n bit

Interrupt source of channel n
0: Transfer end interrupt
1: Buffer empty interrupt

(c) Serial communication operation setting register 0n (SCR0n)

	15	14	13	12	11	10	9	8	7	6	5	4	3	2	1	0
SCR0n	TXE0n 0	RXE0n 1	DAP0n 0	CKP0n 0	0	EOC0n 1	PTC0n1 0/1	PTC0n0 0/1	DIR0n 0/1	0	SLC0n1 0	SLC0n0 1	0	DLS0n2 1	DLS0n1 0/1	DLS0n0 0/1

Setting of parity bit
00B: No parity
01B: No parity judgment
10B: Appending Even parity
11B: Appending Odd parity

Selection of data transfer sequence
0: Inputs/outputs data with MSB first
1: Inputs/outputs data with LSB first.

Setting of data length

(d) Serial data register 0n (SDR0n) (lower 8 bits: RXDq)

	15	14	13	12	11	10	9	8	7	6	5	4	3	2	1	0
SDR0n	Baud rate setting							0	Receive data register							

RXDq

(e) Serial output register 0 (SO0)

	15	14	13	12	11	10	9	8	7	6	5	4	3	2	1	0
SO0	0	0	0	0	1	CKO02 ×	CKO01 × Note	CKO00 × Note	0	0	0	0	1	SO02 ×	SO01 × Note	SO00 ×

(Note, **Caution**, and **Remark** are listed on the next page.**)**

Figure 13-79. Example of Contents of Registers for UART Reception of UART (UART0, UART1) (2/2)

(f) Serial output enable register 0 (SOE0) …The register that not used in this mode.

	15	14	13	12	11	10	9	8	7	6	5	4	3	2	1	0
SOE0	0	0	0	0	0	0	0	0	0	0	0	0	0	SOE02 ×	SOE01 × Note	SOE00 ×

(g) Serial channel start register 0 (SS0) … Sets only the bits of the target channel is 1.

	15	14	13	12	11	10	9	8	7	6	5	4	3	2	1	0
SS0	0	0	0	0	0	0	0	0	0	0	0	0	SS03 0/1	SS02 ×	SS01 0/1	SS00 ×

Notes CSI00 and CSI01 are only available in the 44-pin and 48-pin products of the 78K0R/IC3 and in the 78K0R/ID3 and 78K0R/IE3.

Caution For the UART reception, be sure to set SMR0r of channel r that is to be paired with channel n.

Remark ▒ : Setting disabled (set to the initial value)

×: Bit that cannot be used in this mode (set to the initial value when not used in any mode)

0/1: Set to 0 or 1 depending on the usage of the user

(2) Operation procedure

Figure 13-80. Initial Setting Procedure for UART Reception

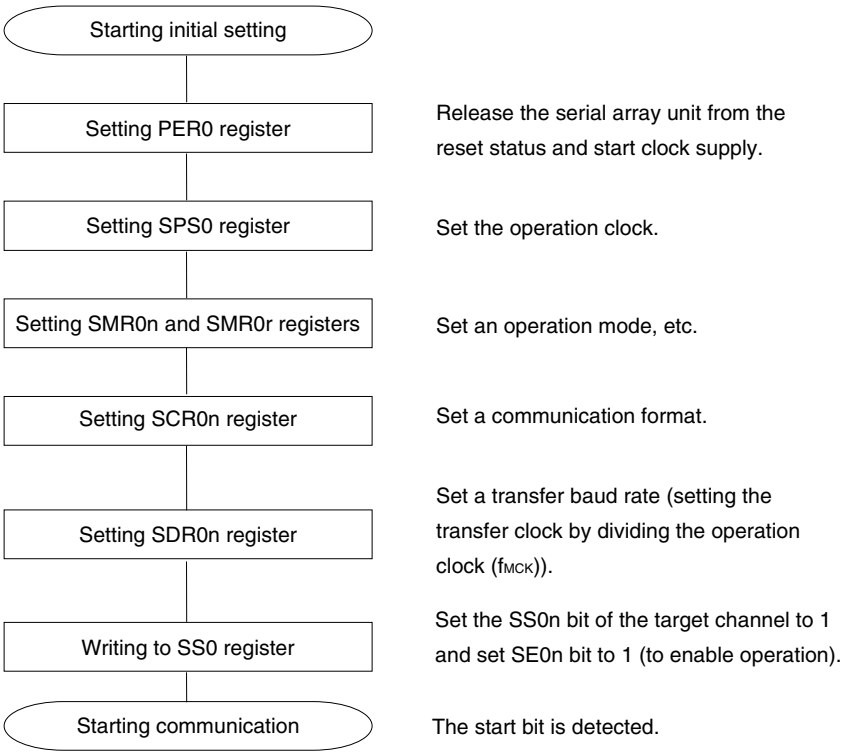

Caution After setting the SAU0EN bit of peripheral enable register 0 (PER0) to 1, be sure to set serial clock select register 0 (SPS0) after 4 or more f_{CLK} clocks have elapsed.

Figure 13-81. Procedure for Stopping UART Reception

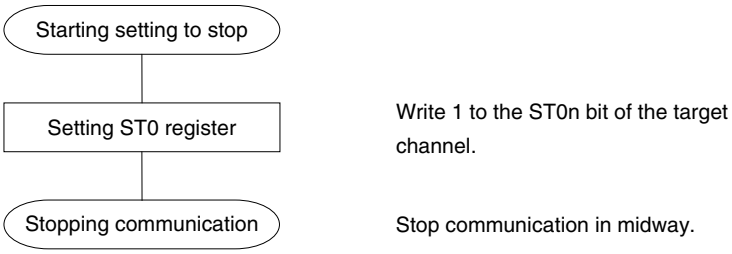

Figure 13-82. Procedure for Resuming UART Reception

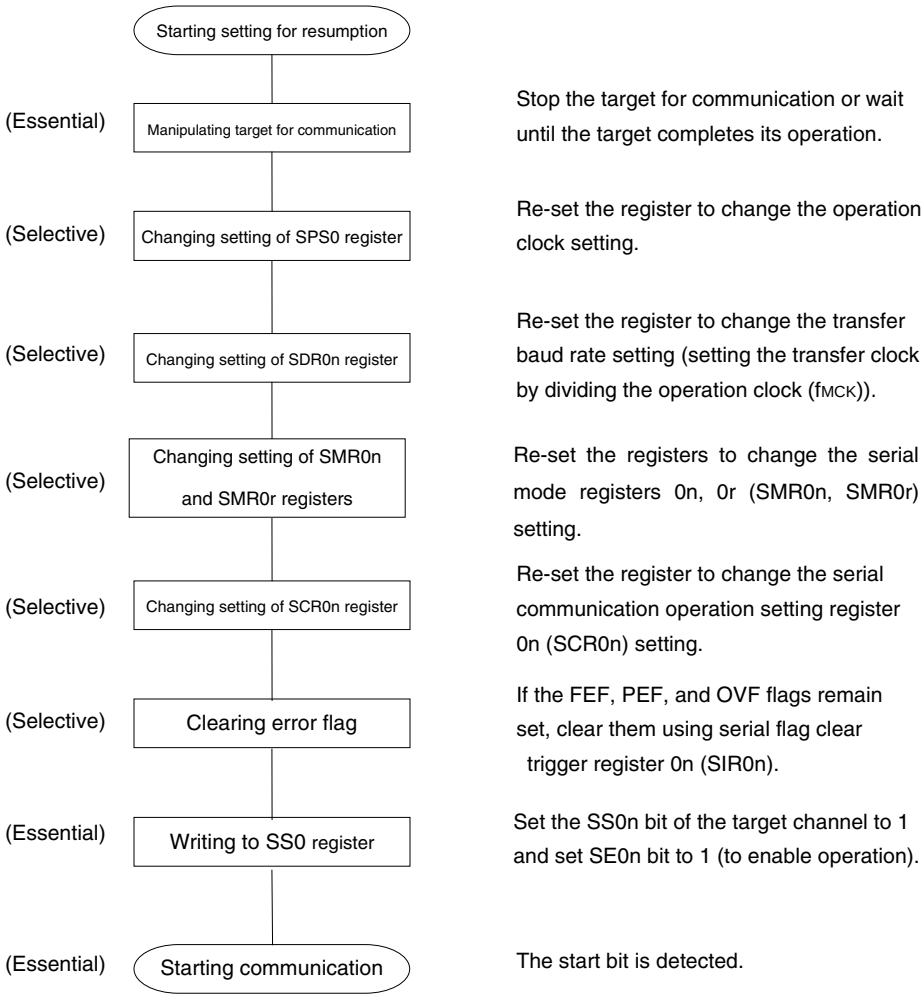

(3) Processing flow

Figure 13-83. Timing Chart of UART Reception

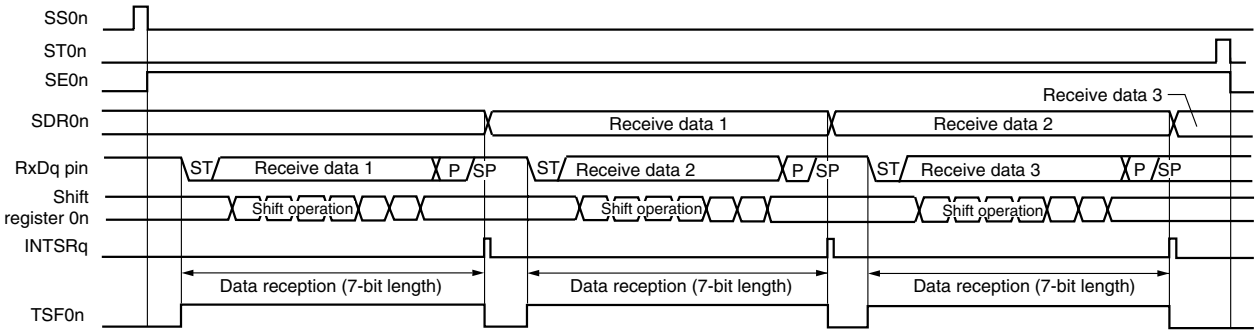

Remark n: Channel number (n = 1, 3), q: UART number (q = 0, 1)

Figure 13-84. Flowchart of UART Reception

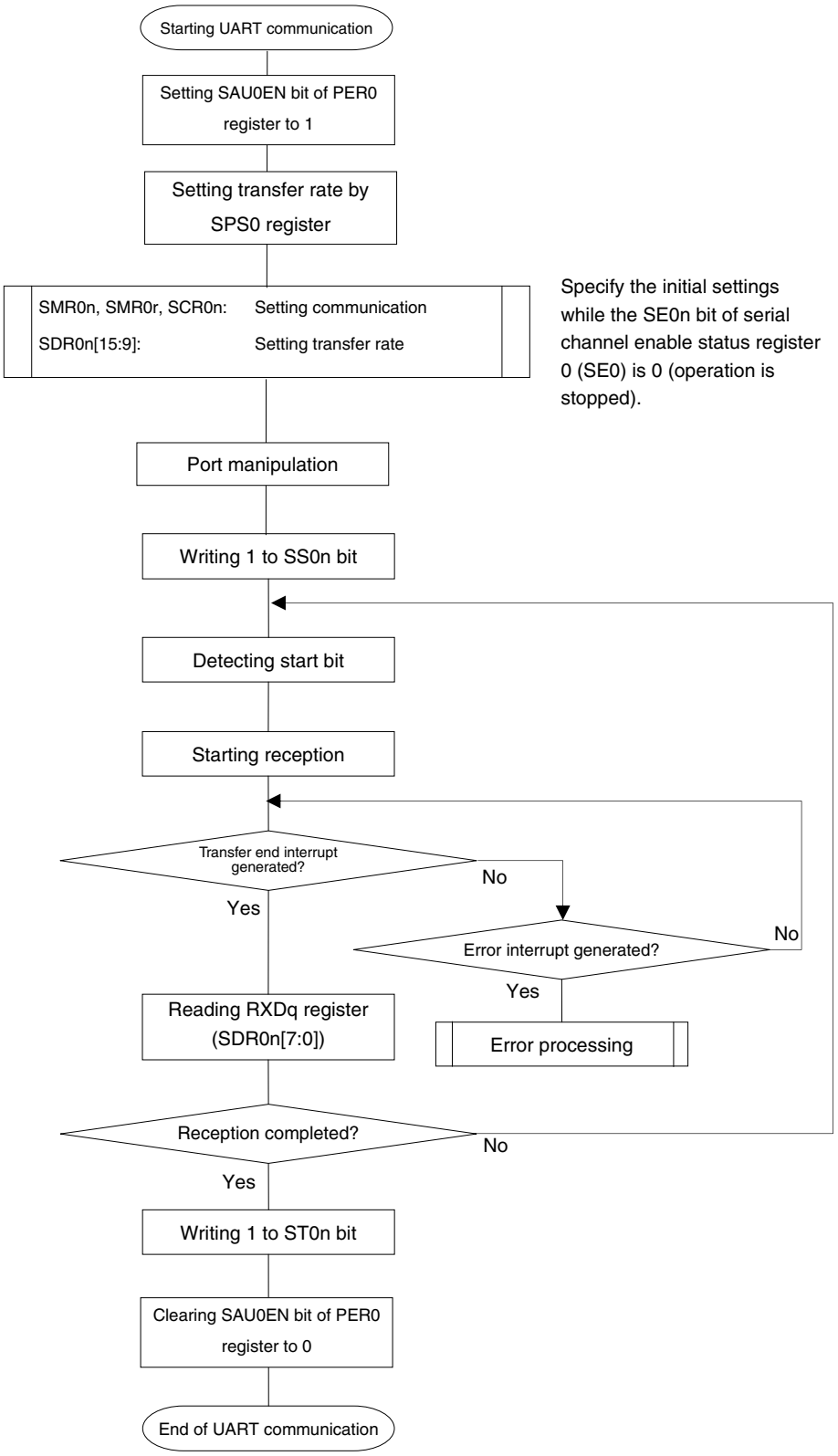

Caution After setting SAU0EN bit of the peripheral enable register 0 (PER0) to 1, be sure to set serial clock select register 0 (SPS0) after 4 or more f_{CLK} clocks have elapsed.

13.6.3 LIN transmission

Of UART transmission, UART0 supports LIN communication.

For LIN transmission, channel 0 of unit (SAU) is used.

UART	UART0	UART1
Support of LIN communication	Supported	Not supported
Target channel	Channel 0 of SAU	–
Pins used	TxD0	–
Interrupt	INTST0	–
	Transfer end interrupt (in single-transfer mode) or buffer empty interrupt (in continuous transfer mode) can be selected.	
Error detection flag	None	
Transfer data length	8 bits	
Transfer rate	Max. $f_{MCK}/6$ [bps] (SDR00 [15:9] = 2 or more), Min. $f_{CLK}/(2 \times 2^{11} \times 128)$ [bps] Note	
Data phase	Forward output (default: high level) Reverse output (default: low level)	
Parity bit	The following selectable • No parity bit • Appending 0 parity • Appending even parity • Appending odd parity	
Stop bit	The following selectable • Appending 1 bit • Appending 2 bits	
Data direction	MSB or LSB first	

Note Use this operation within a range that satisfies the conditions above and the AC characteristics in the electrical specifications (see **CHAPTER 28 ELECTRICAL SPECIFICATIONS**).

Remark f_{MCK}: Operation clock frequency of target channel
f_{CLK}: System clock frequency

LIN stands for Local Interconnect Network and is a low-speed (1 to 20 kbps) serial communication protocol designed to reduce the cost of an automobile network.

Communication of LIN is single-master communication and up to 15 slaves can be connected to one master.

The slaves are used to control switches, actuators, and sensors, which are connected to the master via LIN.

Usually, the master is connected to a network such as CAN (Controller Area Network).

A LIN bus is a single-wire bus to which nodes are connected via transceiver conforming to ISO9141.

According to the protocol of LIN, the master transmits a frame by attaching baud rate information to it. A slave receives this frame and corrects a baud rate error from the master. If the baud rate error of a slave is within ±15%, communication can be established.

Figure 13-85 outlines a transmission operation of LIN.

Figure 13-85. Transmission Operation of LIN

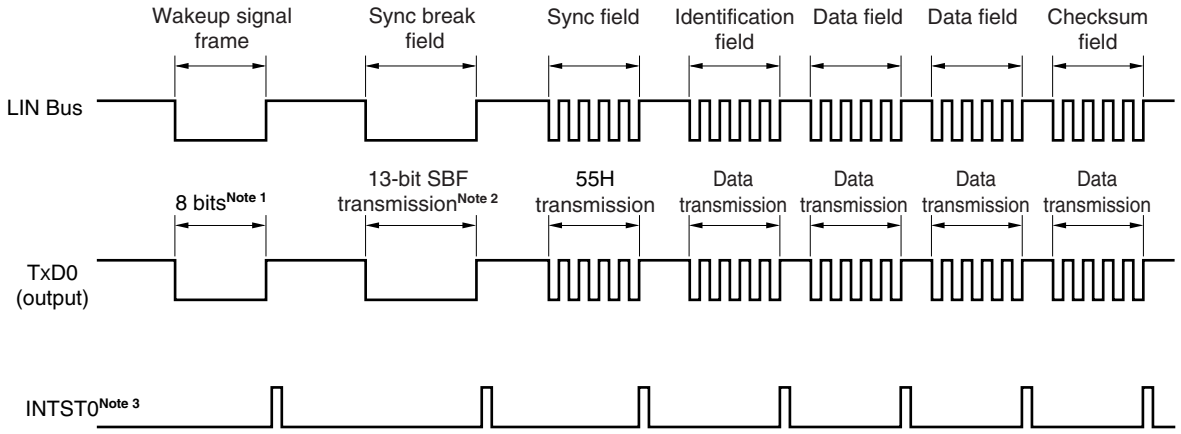

Notes 1. The baud rate is set so as to satisfy the standard of the wakeup signal and data of 00H is transmitted.

2. A sync break field is defined to have a width of 13 bits and output a low level. Where the baud rate for main transfer is N [bps], therefore, the baud rate of the sync break field is calculated as follows.

(Baud rate of sync break field) = 9/13 × N

By transmitting data of 00H at this baud rate, a sync break field is generated.

3. INTST0 is output upon completion of transmission. INTST0 is also output when SBF transmission is executed.

Remark The interval between fields is controlled by software.

Figure 13-86. Flowchart for LIN Transmission

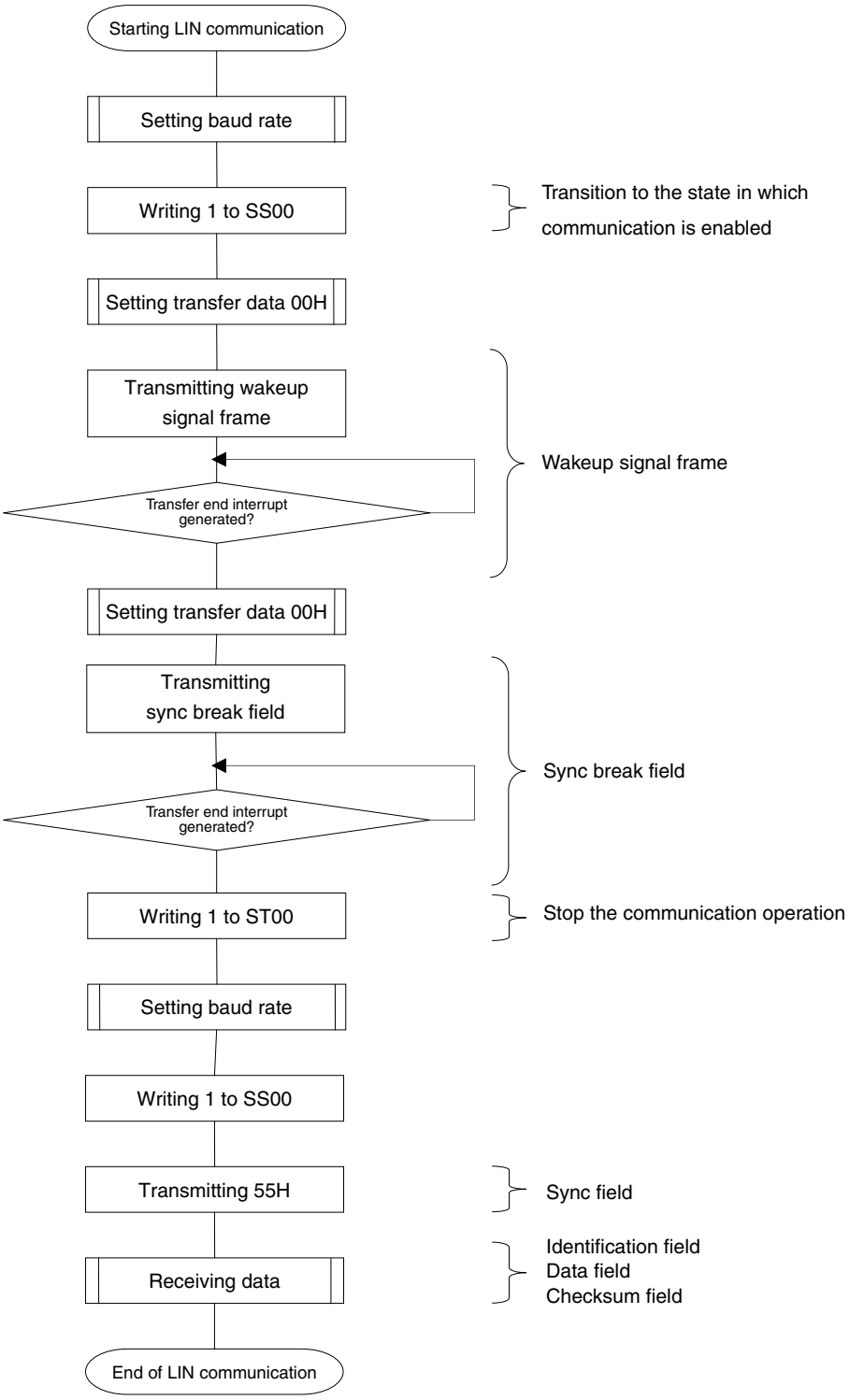

13.6.4 LIN reception

Of UART reception, UART0 supports LIN communication.

For LIN reception, channel 1 of unit (SAU) is used.

UART	UART0	UART1
Support of LIN communication	Supported	Not supported
Target channel	Channel 1 of SAU	–
Pins used	RxD0	–
Interrupt	INTSR0	–
	Transfer end interrupt only (Setting the buffer empty interrupt is prohibited.)	
Error interrupt	INTSRE0	–
Error detection flag	• Framing error detection flag (FEF01) • Parity error detection flag (PEF01) • Overrun error detection flag (OVF01)	
Transfer data length	8 bits	
Transfer rate	Max. $f_{MCK}/6$ [bps] (SDR01 [15:9] = 2 or more), Min. $f_{CLK}/(2 \times 2^{11} \times 128)$ [bps] Note	
Data phase	Forward output (default: high level) Reverse output (default: low level)	
Parity bit	The following selectable • No parity bit (The parity bit is not checked.) • Appending 0 parity (The parity bit is not checked.) • Even-parity check • Odd-parity check	
Stop bit	The following selectable • Appending 1 bit • Appending 2 bits	
Data direction	MSB or LSB first	

Note Use this operation within a range that satisfies the conditions above and the AC characteristics in the electrical specifications (see **CHAPTER 28 ELECTRICAL SPECIFICATIONS**).

Remark f_{MCK}: Operation clock frequency of target channel
f_{CLK}: System clock frequency

Figure 13-87 outlines a reception operation of LIN.

Figure 13-87. Reception Operation of LIN

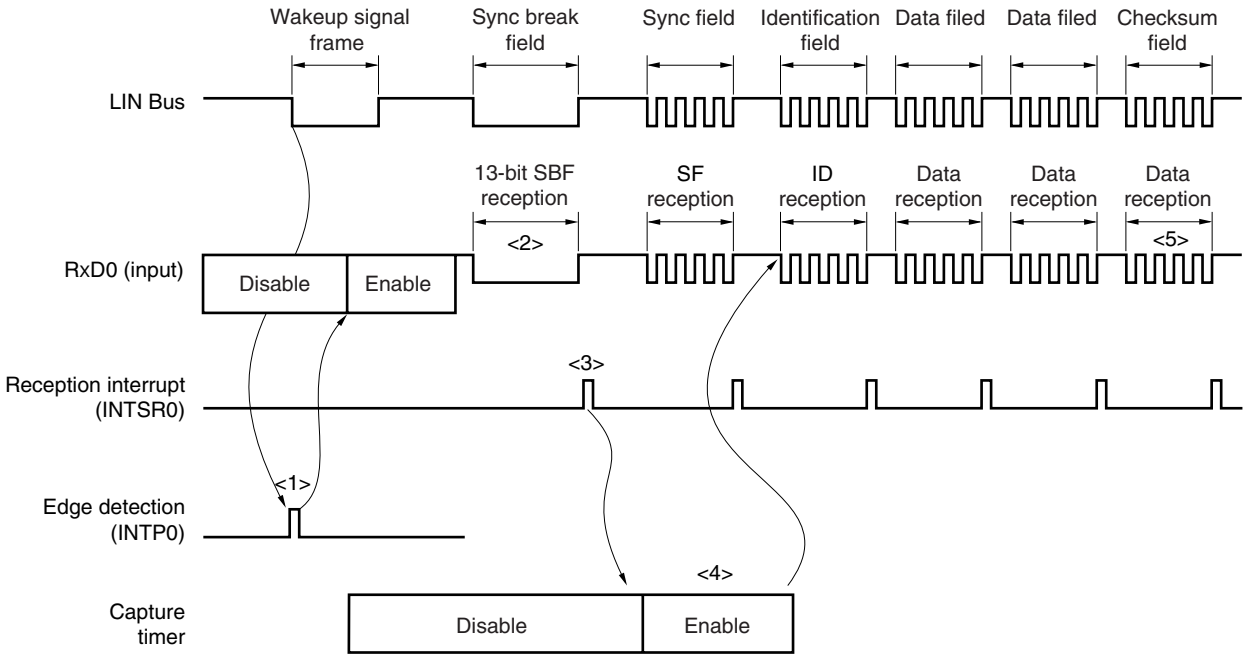

Here is the flow of signal processing.

<1> The wakeup signal is detected by detecting an interrupt edge (INTP0) on a pin. When the wakeup signal is detected, enable reception of UART0 (RXE01 = 1) and wait for SBF reception.

<2> When the start bit of SBF is detected, reception is started and serial data is sequentially stored in the RXD0 register (= bits 7 to 0 of the serial data register 01 (SDR01)) at the set baud rate. When the stop bit is detected, the reception end interrupt request (INTSR0) is generated. When data of low levels of 11 bits or more is detected as SBF, it is judged that SBF reception has been correctly completed. If data of low levels of less than 11 bits is detected as SBF, it is judged that an SBF reception error has occurred, and the system returns to the SBF reception wait status.

<3> When SBF reception has been correctly completed, start channel 7 of the timer array unit TAUS and measure the bit interval (pulse width) of the sync field (see **6.7.5 Operation as input signal high-/low-level width measurement**).

<4> Calculate a baud rate error from the bit interval of sync field (SF). Stop UART0 once and adjust (re-set) the baud rate.

<5> The checksum field should be distinguished by software. In addition, processing to initialize UART0 after the checksum field is received and to wait for reception of SBF should also be performed by software.

Note Timer channel 7 can be used for the LIN-bus function in all products of the 78K0R/Ix3.

Also, when RxD0 functions alternately as a timer input pin, the corresponding timer input pin channels can also be used for the LIN-bus function. The timer channels in each version of the 78K0R/Ix3 that can be used for the LIN-bus function in addition to timer channel 7 are shown below.

78K0R/IB3 (P11/RxD0/TI03/TO03)	: Channel 3 of TAUS
38-pin products of 78K0R/IC3 (P72/INTP6/RxD0)	: None
44-pin and 48-pin products of 78K0R/IC3, 78K0R/ID3, 78K0R/IE3 (P74/RxD0/TI10/SI00)	: Chanel 10 of TAUS

Figure 13-88 shows the configuration of a port that manipulates reception of LIN.

The wakeup signal transmitted from the master of LIN is received by detecting an edge of an external interrupt (INTP0). The length of the sync field transmitted from the master can be measured by using the external event capture operation of the timer array unit TAUS to calculate a baud-rate error.

By controlling switch of port input (ISC0/ISC1), the input source of port input (RxD0) for reception can be input to the external interrupt pin (INTP0) and timer array unit TAUS.

Figure 13-88. Port Configuration for Manipulating Reception of LIN (1/3)

•78K0R/IB3

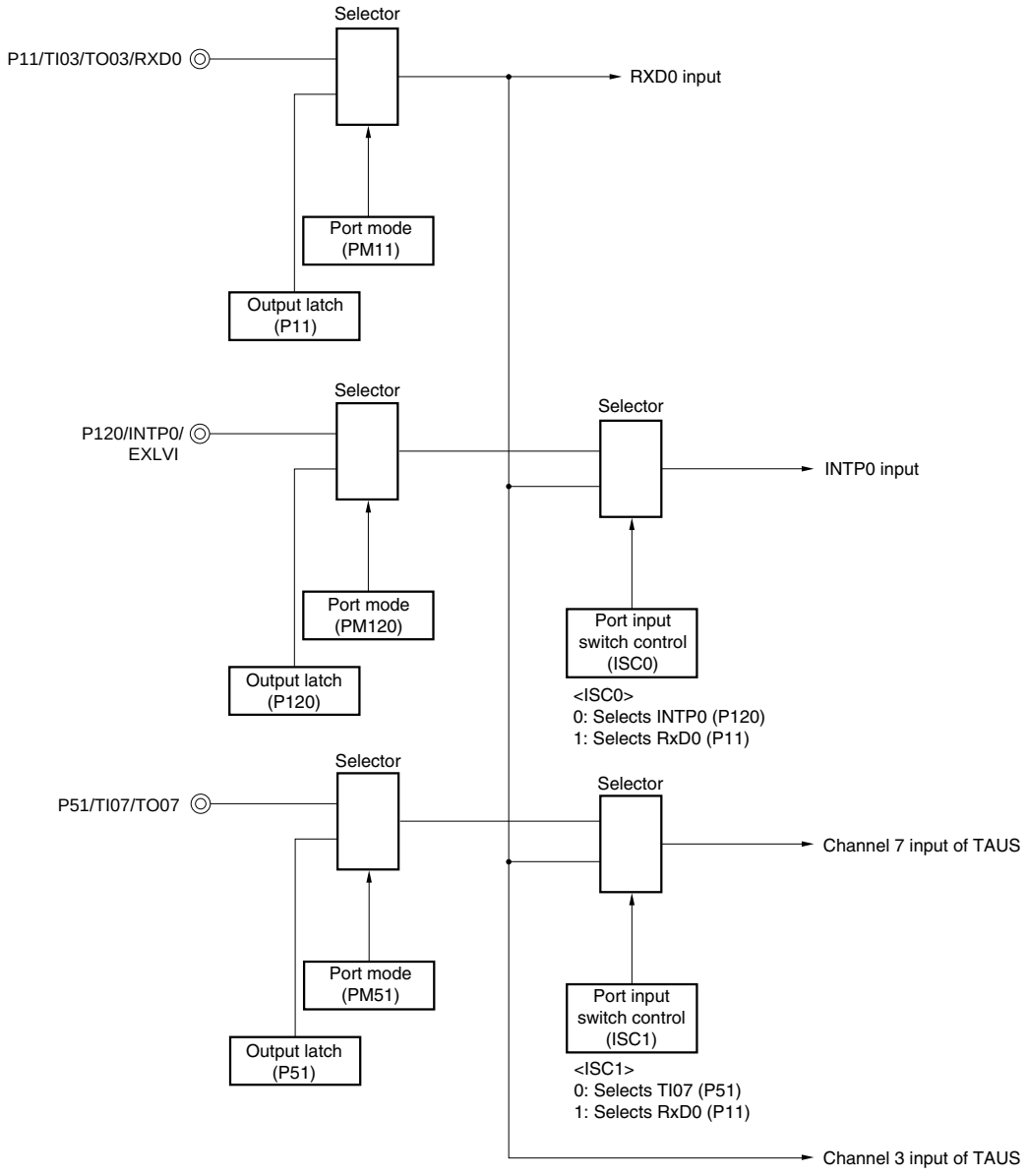

Figure 13-88. Port Configuration for Manipulating Reception of LIN (2/3)

• 38-pin products of 78K0R/IC3

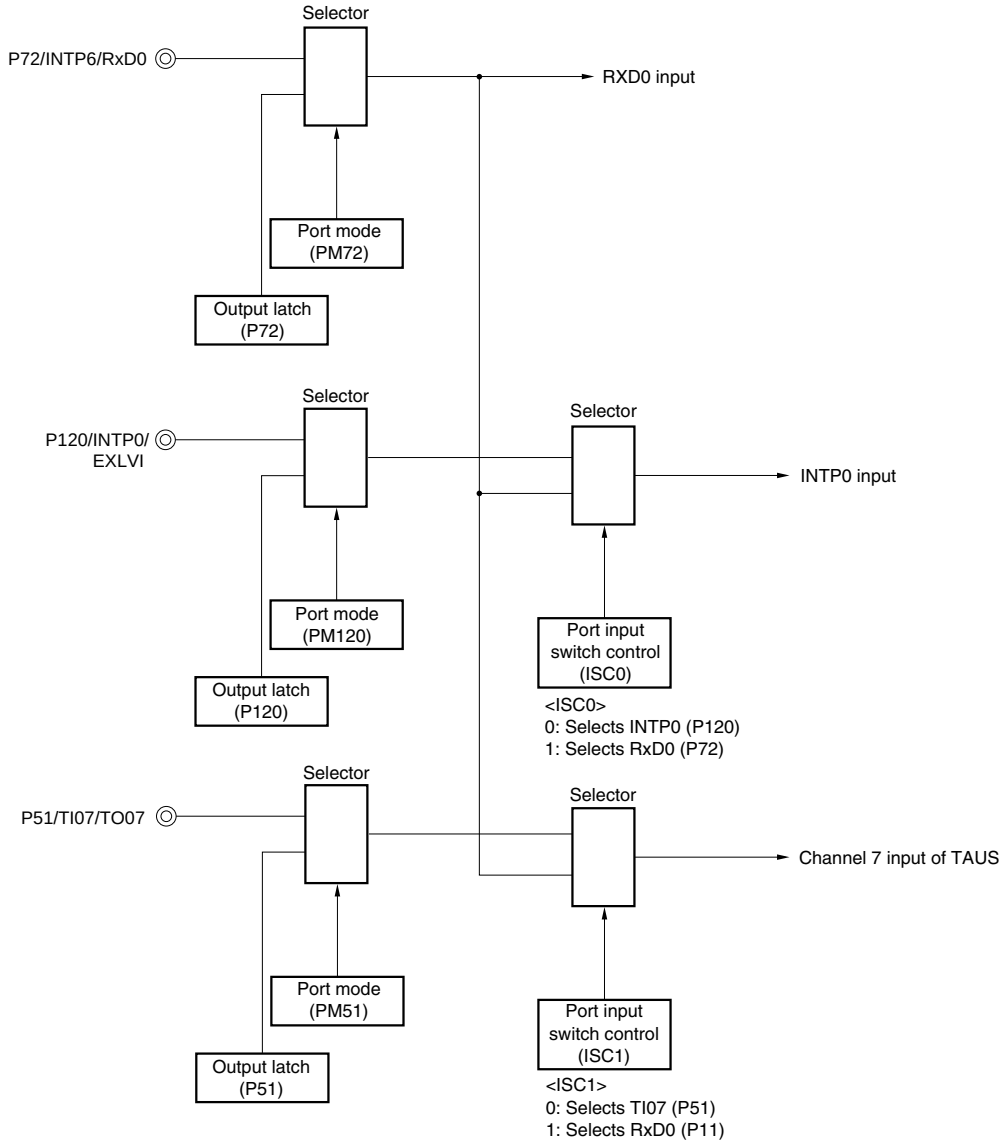

Remark ISC0 to ISC4: Bits 0 to 4 of the input switch control register (ISC) (See **Figure 13-17**.)

Figure 13-88. Port Configuration for Manipulating Reception of LIN (3/3)

• 44-pin and 48-pin products of 78K0R/IC3, 78K0R/ID3, 78K0R/IC3

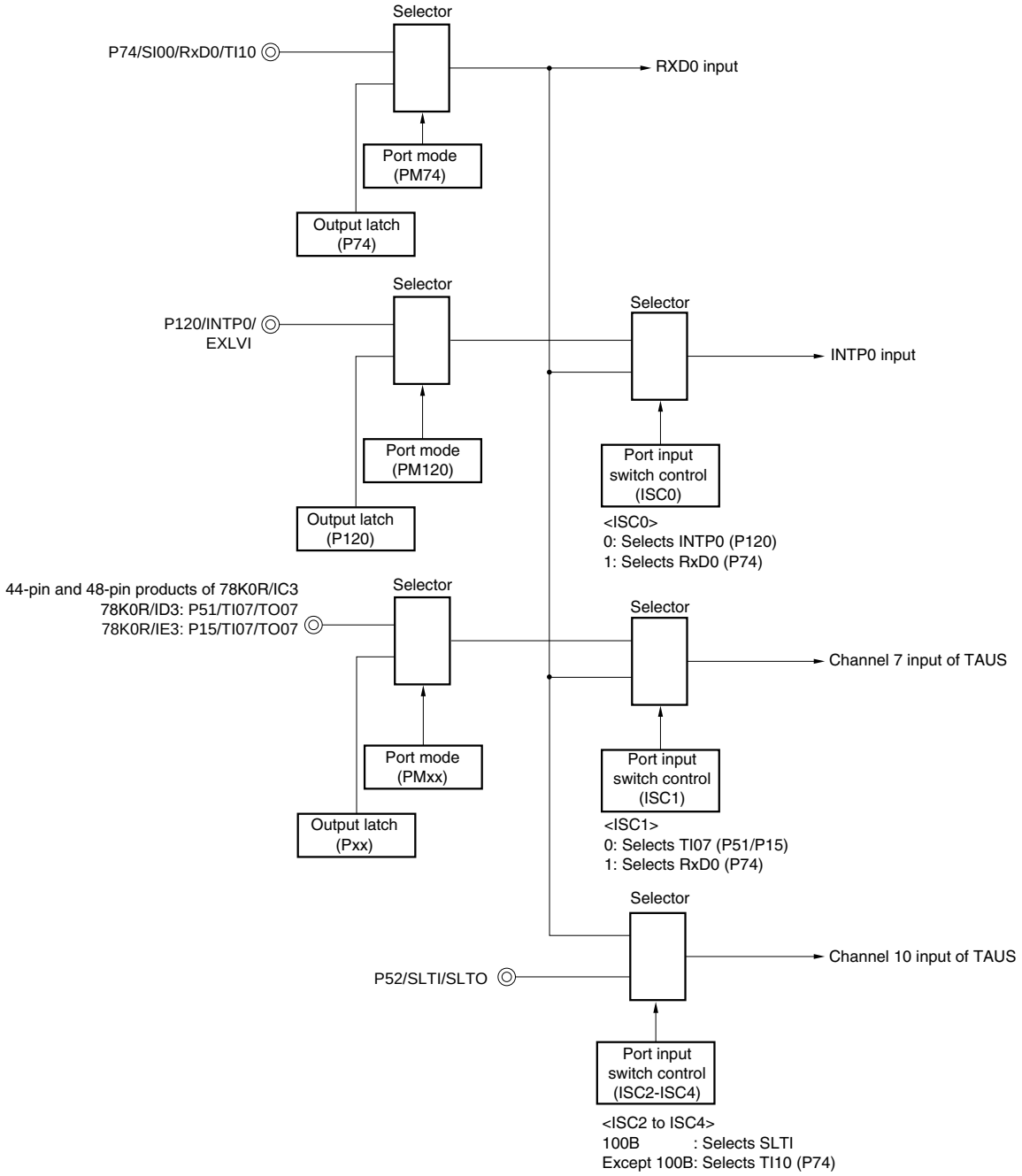

Remarks 1. ISC0 to ISC4: Bits 0 to 4 of the input switch control register (ISC) (See **Figure 13-17**.)

2. 44-pin and 48-pin products of 78K0R/IC3, 78K0R/ID3 : xx = 51

78K0R/IE3 : xx = 15

The peripheral functions used for the LIN communication operation are as follows.

<Peripheral functions used>

- External interrupt (INTP0); Wakeup signal detection
  Usage: To detect an edge of the wakeup signal and the start of communication
- Channel supporting LIN reception in the timer array unit (TAUS); Baud rate error detection
  Usage: To detect the length of the sync field (SF) and divide it by the number of bits in order to detect an error (The interval of the edge input to RxD0 is measured in the capture mode.)
- Channels 0 and 1 (UART0) of serial array unit (SAU)

Figure 13-89. Flowchart of LIN Reception

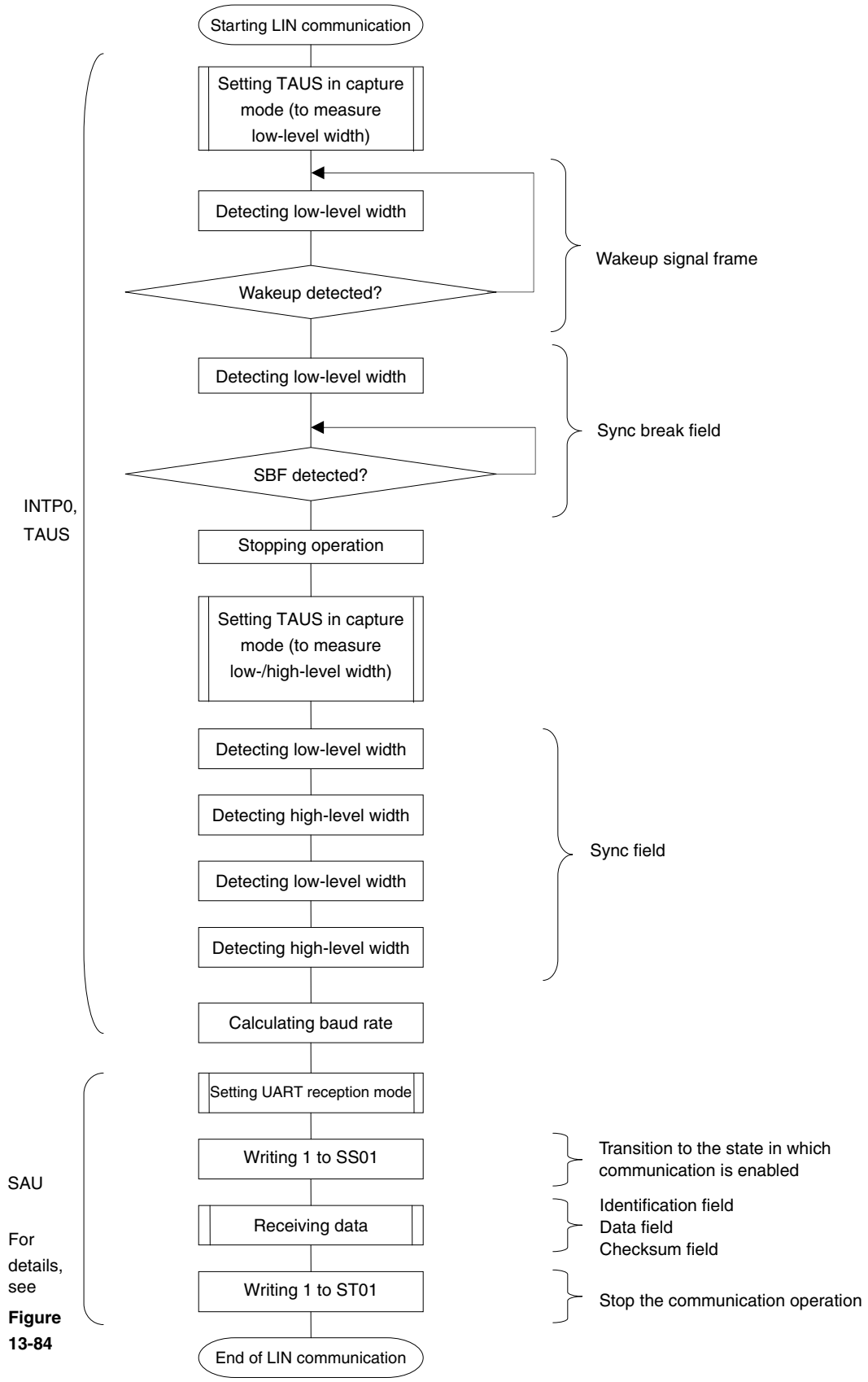

13.6.5 Calculating baud rate

(1) Baud rate calculation expression

The baud rate for UART (UART0, UART1) communication can be calculated by the following expressions.

(Baud rate) = {Operation clock (MCK) frequency of target channel} ÷ (SDR0n[15:9] + 1) ÷ 2 [bps]

Caution Setting serial data register 0n (SDR0n) SDR0n[15:9] = (0000000B, 0000001B) is prohibited.

Remarks 1. When UART is used, the value of SDR0n[15:9] is the value of bits 15 to 9 of the SDR0n register (0000010B to 1111111B) and therefore is 2 to 127.

2. n: Channel number (n = 0 to 3)

The operation clock (f_{MCK}) is determined by serial clock select register 0 (SPS0) and bit 15 (CKS0n) of serial mode register 0n (SMR0n).

Table 13-3. Selection of Operation Clock

SMR0n Register	SPS0 Register								Operation Clock (MCK) Note1	
CKS0n	PRS 013	PRS 012	PRS 011	PRS 010	PRS 003	PRS 002	PRS 001	PRS 000		f_{CLK} = 20 MHz
0	X	X	X	X	0	0	0	0	f_{CLK}	20 MHz
	X	X	X	X	0	0	0	1	$f_{CLK}/2$	10 MHz
	X	X	X	X	0	0	1	0	$f_{CLK}/2^2$	5 MHz
	X	X	X	X	0	0	1	1	$f_{CLK}/2^3$	2.5 MHz
	X	X	X	X	0	1	0	0	$f_{CLK}/2^4$	1.25 MHz
	X	X	X	X	0	1	0	1	$f_{CLK}/2^5$	625 kHz
	X	X	X	X	0	1	1	0	$f_{CLK}/2^6$	313 kHz
	X	X	X	X	0	1	1	1	$f_{CLK}/2^7$	156 kHz
	X	X	X	X	1	0	0	0	$f_{CLK}/2^8$	78.1 kHz
	X	X	X	X	1	0	0	1	$f_{CLK}/2^9$	39.1 kHz
	X	X	X	X	1	0	1	0	$f_{CLK}/2^{10}$	19.5 kHz
	X	X	X	X	1	0	1	1	$f_{CLK}/2^{11}$	9.77 kHz
	X	X	X	X	1	1	1	1	INTTM02 Note2	
1	0	0	0	0	X	X	X	X	f_{CLK}	20 MHz
	0	0	0	1	X	X	X	X	$f_{CLK}/2$	10 MHz
	0	0	1	0	X	X	X	X	$f_{CLK}/2^2$	5 MHz
	0	0	1	1	X	X	X	X	$f_{CLK}/2^3$	2.5 MHz
	0	1	0	0	X	X	X	X	$f_{CLK}/2^4$	1.25 MHz
	0	1	0	1	X	X	X	X	$f_{CLK}/2^5$	625 kHz
	0	1	1	0	X	X	X	X	$f_{CLK}/2^6$	313 kHz
	0	1	1	1	X	X	X	X	$f_{CLK}/2^7$	156 kHz
	1	0	0	0	X	X	X	X	$f_{CLK}/2^8$	78.1 kHz
	1	0	0	1	X	X	X	X	$f_{CLK}/2^9$	39.1 kHz
	1	0	1	0	X	X	X	X	$f_{CLK}/2^{10}$	19.5 kHz
	1	0	1	1	X	X	X	X	$f_{CLK}/2^{11}$	9.77 kHz
	1	1	1	1	X	X	X	X	INTTM02 Note2	
Other than above									Setting prohibited	

Notes 1. When changing the clock selected for f_{CLK} (by changing the system clock control register (CKC) value), do so after having stopped (serial channel stop register 0 (ST0) = 000FH) the operation of the serial array unit (SAU). When selecting INTTM02 for the operation clock, also stop the timer array unit TAUS (timer channel stop register 0 (TT0) = 00FFH).

2. SAU can be operated at a fixed division ratio of the subsystem clock, regardless of the f_{CLK} frequency (main system clock and subsystem clock), by operating the interval timer for which $f_{SUB}/4$ has been selected as the count clock (setting TIS02 bit of the timer input select register 0 (TIS0) to 1) and selecting INTTM02 by using the serial clock select register 0 (SPS0) in channel 2 of TAUS. When changing f_{CLK}, however, SAU and TAUS must be stopped as described in Note 1 above.

Remarks 1. X: Don't care

2. n: Channel number (n = 0 to 3)

(2) Baud rate error during transmission

The baud rate error of UART (UART0, UART1) communication during transmission can be calculated by the following expression. Make sure that the baud rate at the transmission side is within the permissible baud rate range at the reception side.

(Baud rate error) = (Calculated baud rate value) ÷ (Target baud rate) × 100 − 100 [%]

Here is an example of setting a UART baud rate at f_{CLK} = 20 MHz.

UART Baud Rate (Target Baud Rate)	f_{CLK} = 20 MHz			
	Operation Clock (f_{MCK})	SDR0n[15:9]	Calculated Baud Rate	Error from Target Baud Rate[Note]
300 bps	$f_{CLK}/2^9$	64	300.48 bps	+0.16 %
600 bps	$f_{CLK}/2^8$	64	600.96 bps	+0.16 %
1200 bps	$f_{CLK}/2^7$	64	1201.92 bps	+0.16 %
2400 bps	$f_{CLK}/2^6$	64	2403.85 bps	+0.16 %
4800 bps	$f_{CLK}/2^5$	64	4807.69 bps	+0.16 %
9600 bps	$f_{CLK}/2^4$	64	9615.38 bps	+0.16 %
19200 bps	$f_{CLK}/2^3$	64	19230.8 bps	+0.16 %
31250 bps	$f_{CLK}/2^3$	39	31250.0 bps	±0.0 %
38400 bps	$f_{CLK}/2^2$	64	38461.5 bps	+0.16 %
76800 bps	$f_{CLK}/2$	64	76923.1 bps	+0.16 %
153600 bps	f_{CLK}	64	153846 bps	+0.16 %
312500 bps	f_{CLK}	31	312500 bps	±0.0 %

Note This does not include the error related to the oscillation accuracy of the X1 oscillator and internal high-speed oscillator.

Remark n: Channel number (n = 0, 2)

(3) Permissible baud rate range for reception

The permissible baud rate range for reception during UART (UART0, UART1) communication can be calculated by the following expression. Make sure that the baud rate at the transmission side is within the permissible baud rate range at the reception side.

$$\text{(Maximum receivable baud rate)} = \frac{2 \times k \times Nfr}{2 \times k \times Nfr - k + 2} \times Brate$$

$$\text{(Minimum receivable baud rate)} = \frac{2 \times k \times (Nfr - 1)}{2 \times k \times Nfr - k - 2} \times Brate$$

Brate: Calculated baud rate value at the reception side (See **13.6.5 (1) Baud rate calculation expression**.)

k: SDR0n[15:9] + 1

Nfr: 1 data frame length [bits]

= (Start bit) + (Data length) + (Parity bit) + (Stop bit)

Remark n: Channel number (n = 1, 3)

Figure 13-90. Permissible Baud Rate Range for Reception (1 Data Frame Length = 11 Bits)

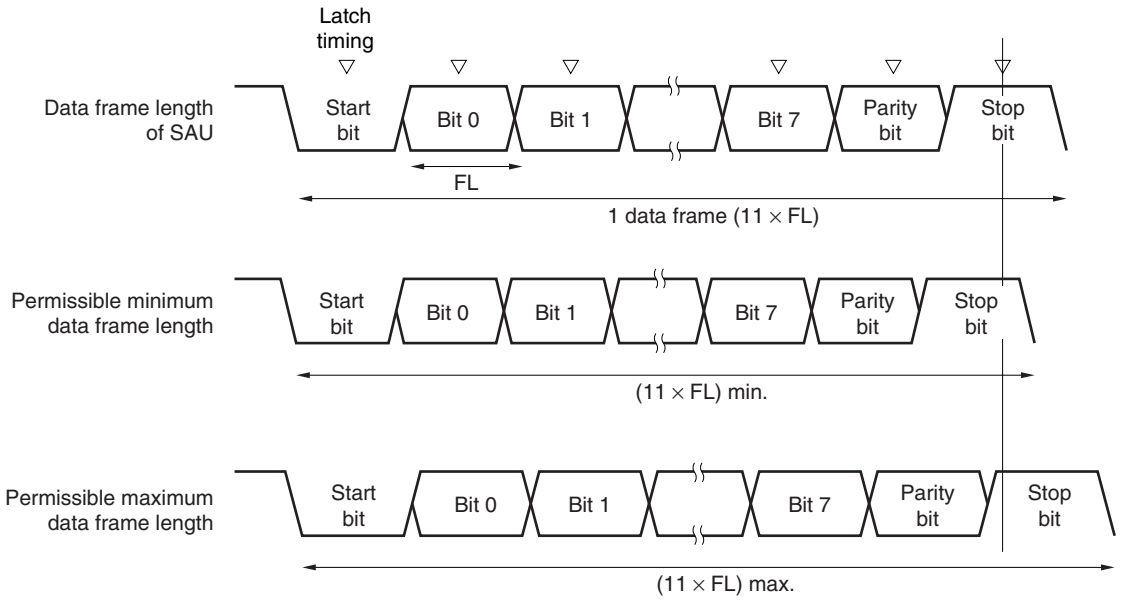

As shown in Figure 13-90, the timing of latching receive data is determined by the division ratio set by bits 15 to 9 of the serial data register 0n (SDR0n) after the start bit is detected. If the last data (stop bit) is received before this latch timing, the data can be correctly received.

13.6.6 Procedure for processing errors that occurred during UART (UART0, UART1) communication

The procedure for processing errors that occurred during UART (UART0, UART1) communication is described in Figures 13-91 and 13-92.

Figure 13-91. Processing Procedure in Case of Parity Error or Overrun Error

Software Manipulation	Hardware Status	Remark
Reads serial data register 0n (SDR0n). →	The BFF0n bit of the SSR0n register is set to 0 and channel n is enabled to receive data.	This is to prevent an overrun error if the next reception is completed during error processing.
Reads serial status register 0n (SSR0n).		Error type is identified and the read value is used to clear error flag.
Writes 1 to serial flag clear trigger register 0n (SIR0n). →	Error flag is cleared.	Error can be cleared only during reading, by writing the value read from the SSR0n register to the SIR0n register without modification.

Figure 13-92. Processing Procedure in Case of Framing Error

Software Manipulation	Hardware Status	Remark
Reads serial data register 0n (SDR0n). →	The BFF0n bit of the SSR0n register is set to 0 and channel n is enabled to receive data.	This is to prevent an overrun error if the next reception is completed during error processing.
Reads serial status register 0n (SSR0n).		Error type is identified and the read value is used to clear error flag.
Writes serial flag clear trigger register 0n (SIR0n). →	Error flag is cleared.	Error can be cleared only during reading, by writing the value read from the SSR0n register to the SIR0n register without modification.
Sets ST0n bit of serial channel stop register 0 (ST0) to 1. →	The SE0n bit of the serial channel enable status register 0 (SE0) is set to 0 and channel n stops operating.	
Synchronization with other party of communication		Synchronization with the other party of communication is re-established and communication is resumed because it is considered that a framing error has occurred because the start bit has been shifted.
Sets SS0n bit of the serial channel start register 0 (SS0) to 1. →	The SE0n bit of the serial channel enable status register 0 (SE0) is set to 1 and channel n is enabled to operate.	

Remark n: Channel number (n = 0 to 3)

13.7 Operation of Simplified I²C (IIC10) Communication

This is a clocked communication function to communicate with two or more devices by using two lines: serial clock (SCL) and serial data (SDA). This communication function is designed to execute single communication with devices such as EEPROM, flash memory, and A/D converter, and therefore, can be used only by the master.

Make sure by using software, as well as operating the control registers, that the AC specifications of the start and stop conditions are observed.

[Data transmission/reception]

- Master transmission, master reception (only master function with a single master)
- ACK output function[Note] and ACK detection function
- Data length of 8 bits
  (When an address is transmitted, the address is specified by the higher 7 bits, and the least significant bit is used for R/W control.)
- Manual generation of start condition and stop condition

[Interrupt function]

- Transfer end interrupt

[Error detection flag]

- Overrun error
- Parity error (ACK error)

* [Functions not supported by simplified I²C]

- Slave transmission, slave reception
- Arbitration loss detection function
- Wait detection function

Note When receiving the last data, ACK will not be output if 0 is written to the SOE02 (SOE0 register) bit and serial communication data output is stopped. See the processing flow in **13.7.3 (2)** for details.

The channel supporting simplified I²C (IIC10) is channel 2 of SAU.

Channel	Used as CSI	Used as UART	Used as Simplified I²C
0	CSI00[Note]	UART0 (supporting LIN-bus)	–
1	CSI01[Note]		–
2	CSI10	UART1	IIC10
3	–		–

Note CSI00 and CSI01 are only available in the 44-pin and 48-pin products of the 78K0R/IC3 and in the 78K0R/ID3 and 78K0R/IE3.

Simplified I²C (IIC10) performs the following four types of communication operations.

- Address field transmission (See **13.7.1**.)
- Data transmission (See **13.7.2**.)
- Data reception (See **13.7.3**.)
- Stop condition generation (See **13.7.4**.)

13.7.1 Address field transmission

Address field transmission is a transmission operation that first executes in I^2C communication to identify the target for transfer (slave). After a start condition is generated, an address (7 bits) and a transfer direction (1 bit) are transmitted in one frame.

Simplified I^2C	IIC10
Target channel	Channel 2 of SAU
Pins used	SCL10, SDA10 Note
Interrupt	INTIIC10
	Transfer end interrupt only (Setting the buffer empty interrupt is prohibited.)
Error detection flag	Parity error detection flag (PEF02)
Transfer data length	8 bits (transmitted with specifying the higher 7 bits as address and the least significant bit as R/W control)
Transfer rate	Max. $f_{MCK}/4$ [Hz] (SDR02[15:9] = 1 or more) f_{MCK}: Operation clock (f_{MCK}) frequency of target channel However, the following condition must be satisfied in each mode of I^2C. • Max. 400 kHz (first mode) • Max. 100 kHz (standard mode)
Data level	Forward output (default: high level)
Parity bit	No parity bit
Stop bit	Appending 1 bit (for ACK reception timing)
Data direction	MSB first

Note To perform communication via simplified I^2C, set the N-ch open-drain output (V_{DD} tolerance) mode (POM31 = 1) for the port output mode registers (POM3) (see **4.3 Registers Controlling Port Function** for details). When communicating with an external device with a different potential, set the N-ch open-drain output (V_{DD} tolerance) mode (POM32 = 1) also for the clock input/output pins (SCL10) (see **4.4.4 Connecting to external device with different potential (2.5 V, 3 V)** for details).

(1) Register setting

Figure 13-93. Example of Contents of Registers for Address Field Transmission of Simplified I²C (IIC10) (1/2)

(a) Serial mode register 02 (SMR02)

	15	14	13	12	11	10	9	8	7	6	5	4	3	2	1	0
SMR02	CKS02	CCS02						STS02		SIS020				MD022	MD021	MD020
	0/1	0	0	0	0	0	0	0	0	0	1	0	0	1	0	0

Operation clock (f_{MCK}) of channel 2
0: Prescaler output clock CK00 set by SPS0 register
1: Prescaler output clock CK01 set by SPS0 register

Interrupt sources of channel 2
0: Transfer end interrupt
1: Buffer empty interrupt

(b) Serial communication operation setting register 02 (SCR02)

	15	14	13	12	11	10	9	8	7	6	5	4	3	2	1	0
SCR02	TXE02	RXE02	DAP02	CKP02		EOC02	PTC021	PTC020	DIR02		SLC021	SLC020		DLS022	DLS021	DLS020
	1	0	0	0	0	0	0	0	0	0	0	1	0	1	1	1

Setting of parity bit
00B: No parity

Setting of stop bit
01B: Appending 1 bit (ACK)

(c) Serial data register 02 (SDR02) (lower 8 bits: SIO10)

	15	14	13	12	11	10	9	8	7	6	5	4	3	2	1	0
SDR02	Baud rate setting							0	Transmit data setting (address + R/W)							

SIO10

(d) Serial output register 0 (SO0)

	15	14	13	12	11	10	9	8	7	6	5	4	3	2	1	0
SO0						CKO02	CKO01	CKO00						SO02	SO01	SO00
	0	0	0	0	1	0/1	× Note	× Note	0	0	0	0	1	0/1	× Note	×

Start condition is generated by manipulating the SO02 bit.

(e) Serial output enable register 0 (SOE0)

	15	14	13	12	11	10	9	8	7	6	5	4	3	2	1	0
SOE0														SOE02	SOE01	SOE00
	0	0	0	0	0	0	0	0	0	0	0	0	0	0/1	× Note	×

SOE02 = 0 until the start condition is generated, and SOE02 = 1 after generation.

(f) Serial channel start register 0 (SS0) … Sets only the bits of the target channel is 1.

	15	14	13	12	11	10	9	8	7	6	5	4	3	2	1	0
SS0													SS03	SS02	SS01	SS00
	0	0	0	0	0	0	0	0	0	0	0	0	×	0/1	×	×

(**Note** and **Remark** are listed on the next page.)

Figure 13-93. Example of Contents of Registers for Address Field Transmission of Simplified I2C (IIC10) (2/2)

Note CSI00 and CSI01 are only available in the 44-pin and 48-pin products of the 78K0R/IC3 and in the 78K0R/ID3 and 78K0R/IE3.

Remark □: Setting is fixed in the IIC mode, ■: Setting disabled (set to the initial value)
×: Bit that cannot be used in this mode (set to the initial value when not used in any mode)
0/1: Set to 0 or 1 depending on the usage of the user

(2) Operation procedure

Figure 13-94. Initial Setting Procedure for Address Field Transmission

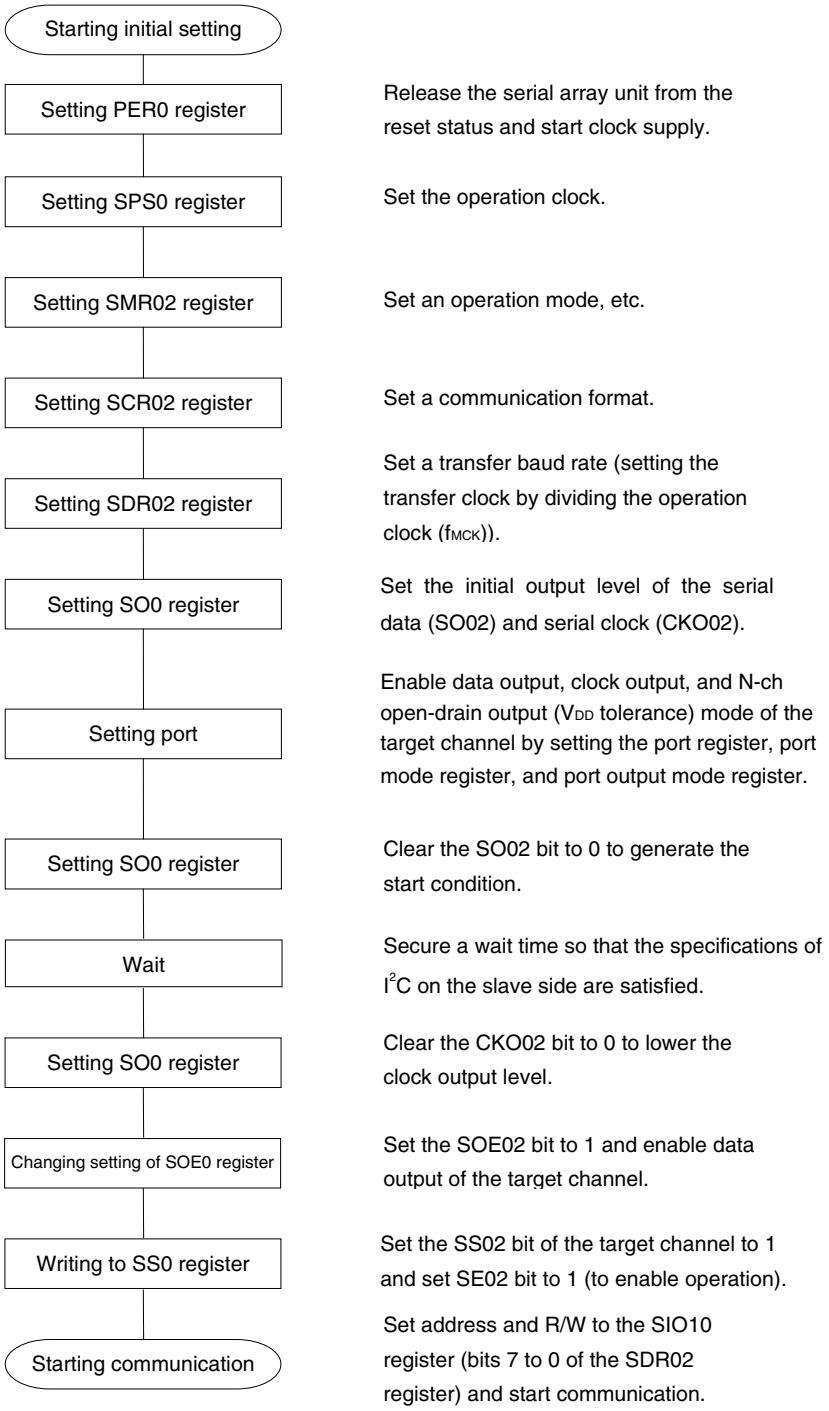

Caution After setting the SAU0EN bit of peripheral enable register 0 (PER0) to 1, be sure to set serial clock select register 0 (SPS0) after 4 or more f_{CLK} clocks have elapsed.

(3) Processing flow

Figure 13-95. Timing Chart of Address Field Transmission

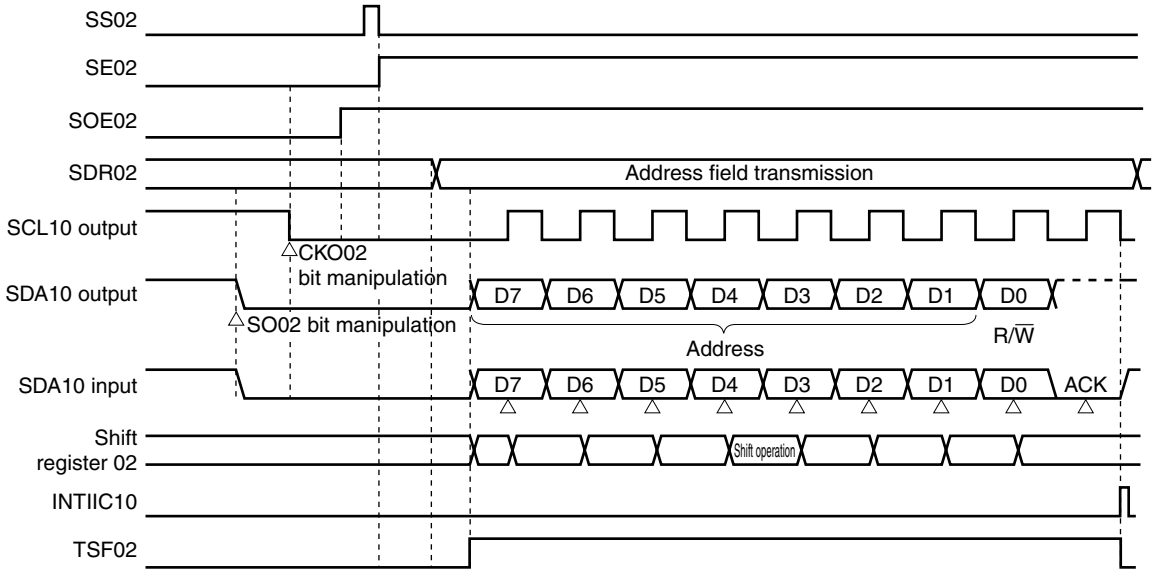

Figure 13-96. Flowchart of Address Field Transmission

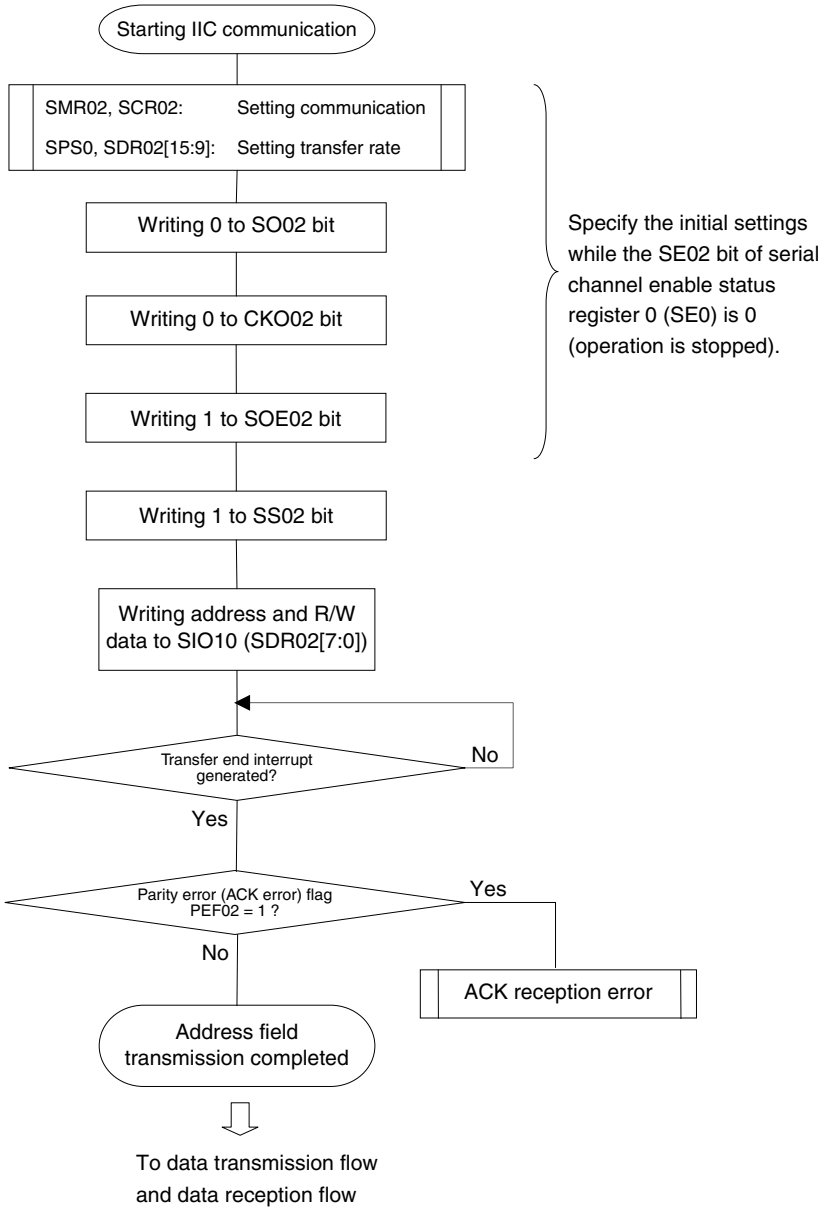

13.7.2 Data transmission

Data transmission is an operation to transmit data to the target for transfer (slave) after transmission of an address field. After all data are transmitted to the slave, a stop condition is generated and the bus is released.

Simplified I^2C	IIC10
Target channel	Channel 2 of SAU
Pins used	SCL10, SDA10 Note
Interrupt	INTIIC10
	Transfer end interrupt only (Setting the buffer empty interrupt is prohibited.)
Error detection flag	Parity error detection flag (PEF02)
Transfer data length	8 bits
Transfer rate	Max. f_{MCK}/4 [Hz] (SDR02[15:9] = 1 or more) f_{MCK}: Operation clock (f_{MCK}) frequency of target channel However, the following condition must be satisfied in each mode of I^2C. • Max. 400 kHz (first mode) • Max. 100 kHz (standard mode)
Data level	Forward output (default: high level)
Parity bit	No parity bit
Stop bit	Appending 1 bit (for ACK reception timing)
Data direction	MSB first

Note To perform communication via simplified I^2C, set the N-ch open-drain output (V_{DD} tolerance) mode (POM31 = 1) for the port output mode registers (POM3) (see **4.3 Registers Controlling Port Function** for details). When communicating with an external device with a different potential, set the N-ch open-drain output (V_{DD} tolerance) mode (POM32 = 1) also for the clock input/output pins (SCL10) (see **4.4.4 Connecting to external device with different potential (2.5 V, 3 V)** for details).

(1) Register setting

Figure 13-97. Example of Contents of Registers for Data Transmission of Simplified I²C (IIC10) (1/2)

(a) Serial mode register 02 (SMR02) … Do not manipulate this register during data transmission/reception.

	15	14	13	12	11	10	9	8	7	6	5	4	3	2	1	0
SMR02	CKS02 0/1	CCS02 0	0	0	0	0	0	STS02 0	0	SIS020 0	1	0	0	MD022 1	MD021 0	MD020 0

(b) Serial communication operation setting register 02 (SCR02) … Do not manipulate the bits of this register, except the TXE02 and RXE02 bits, during data transmission/reception.

	15	14	13	12	11	10	9	8	7	6	5	4	3	2	1	0
SCR02	TXE02 1	RXE02 0	DAP02 0	CKP02 0	0	EOC02 0	PTC021 0	PTC020 0	DIR02 0	0	SLC021 0	SLC020 1	0	DLS022 1	DLS021 1	DLS020 1

(c) Serial data register 02 (SDR02) (lower 8 bits: SIO10)

	15	14	13	12	11	10	9	8	7	6	5	4	3	2	1	0
SDR02	Baud rate setting							0	Transmit data setting							

SIO10

(d) Serial output register 0 (SO0) … Do not manipulate this register during data transmission/reception.

	15	14	13	12	11	10	9	8	7	6	5	4	3	2	1	0
SO0	0	0	0	0	1	CKO02 0/1 Note 1	CKO01 × Note 2	CKO00 × Note 2	0	0	0	0	1	SO02 0/1 Note 1	SO01 × Note 2	SO00 ×

(e) Serial output enable register 0 (SOE0) … Do not manipulate this register during data transmission/reception.

	15	14	13	12	11	10	9	8	7	6	5	4	3	2	1	0
SOE0	0	0	0	0	0	0	0	0	0	0	0	0	0	SOE02 1	SOE01 × Note 2	SOE00 ×

(f) Serial channel start register 0 (SS0) … Do not manipulate this register during data transmission/reception.

	15	14	13	12	11	10	9	8	7	6	5	4	3	2	1	0
SS0	0	0	0	0	0	0	0	0	0	0	0	0	SS03 ×	SS02 0/1	SS01 ×	SS00 ×

(**Note** and **Remark** are listed on the next page.)

Figure 13-97. Example of Contents of Registers for Data Transmission of Simplified I2C (IIC10) (2/2)

Notes 1. The value varies depending on the communication data during communication operation.

2. CSI00 and CSI01 are only available in the 44-pin and 48-pin products of the 78K0R/IC3 and in the 78K0R/ID3 and 78K0R/IE3.

Remark □: Setting is fixed in the IIC mode, ■: Setting disabled (set to the initial value)

×: Bit that cannot be used in this mode (set to the initial value when not used in any mode)

0/1: Set to 0 or 1 depending on the usage of the user

(2) Processing flow

Figure 13-98. Timing Chart of Data Transmission

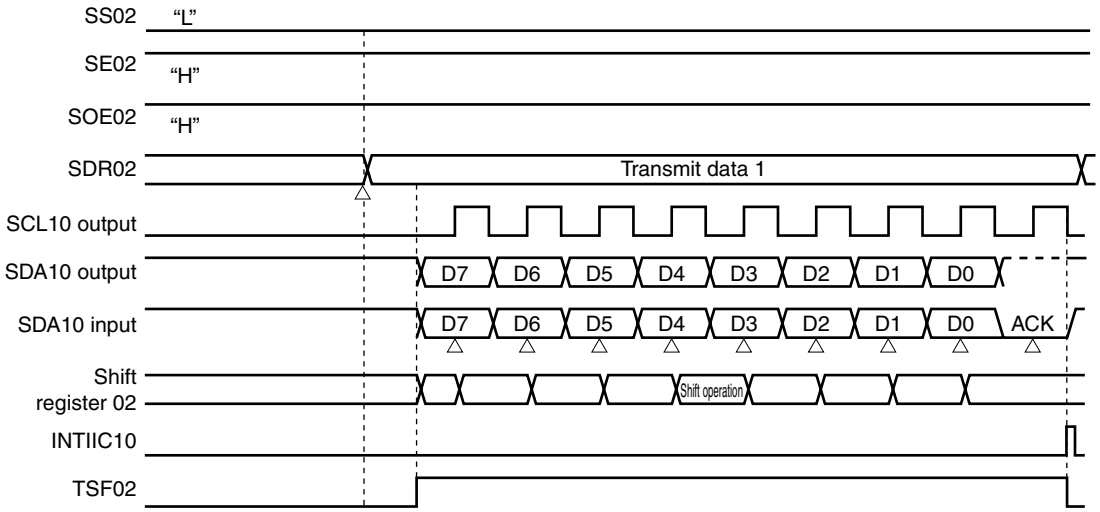

Figure 13-99. Flowchart of Data Transmission

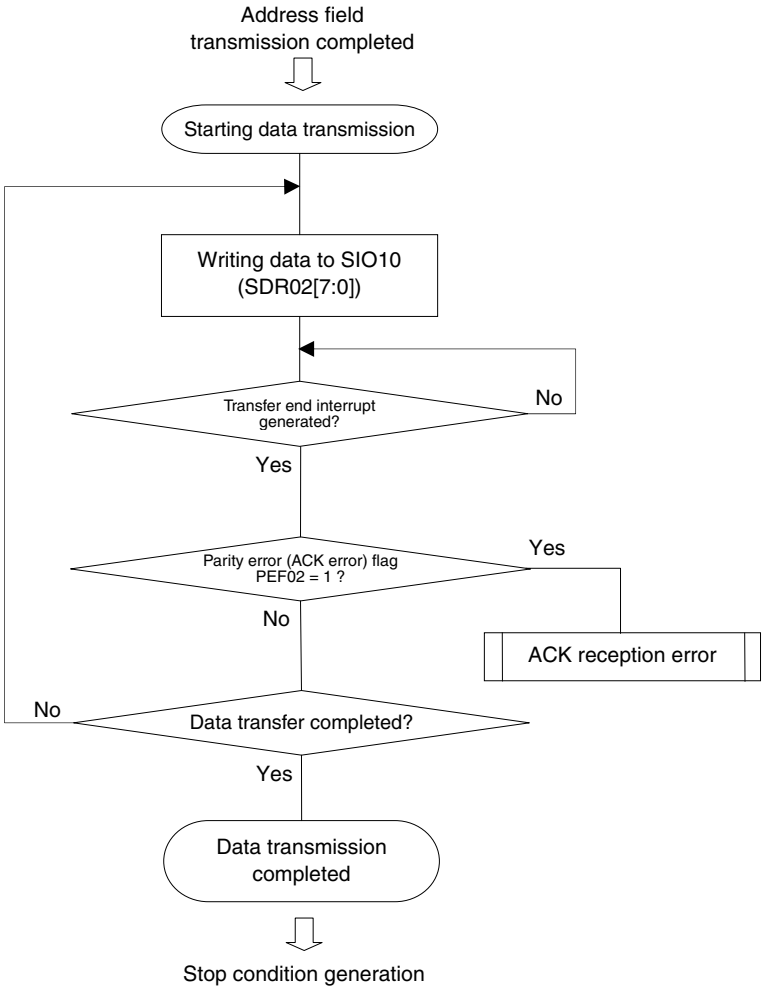

13.7.3 Data reception

Data reception is an operation to receive data to the target for transfer (slave) after transmission of an address field. After all data are received to the slave, a stop condition is generated and the bus is released.

Simplified I^2C	IIC10
Target channel	Channel 2 of SAU
Pins used	SCL10, SDA10 [Note]
Interrupt	INTIIC10
	Transfer end interrupt only (Setting the buffer empty interrupt is prohibited.)
Error detection flag	Overrun error detection flag (OVF02) only
Transfer data length	8 bits
Transfer rate	Max. $f_{MCK}/4$ [Hz] (SDR02[15:9] = 1 or more) f_{MCK}: Operation clock (f_{MCK}) frequency of target channel However, the following condition must be satisfied in each mode of I^2C. • Max. 400 kHz (first mode) • Max. 100 kHz (standard mode)
Data level	Forward output (default: high level)
Parity bit	No parity bit
Stop bit	Appending 1 bit (ACK transmission)
Data direction	MSB first

Note To perform communication via simplified I^2C, set the N-ch open-drain output (V_{DD} tolerance) mode (POM31 = 1) for the port output mode registers (POM3) (see **4.3 Registers Controlling Port Function** for details). When communicating with an external device with a different potential, set the N-ch open-drain output (V_{DD} tolerance) mode (POM32 = 1) also for the clock input/output pins (SCL10) (see **4.4.4 Connecting to external device with different potential (2.5 V, 3 V)** for details).

(1) Register setting

Figure 13-100. Example of Contents of Registers for Data Reception of Simplified I²C (IIC10) (1/2)

(a) Serial mode register 02 (SMR02) … Do not manipulate this register during data transmission/reception.

	15	14	13	12	11	10	9	8	7	6	5	4	3	2	1	0
SMR02	CKS02 0/1	CCS02 0	0	0	0	0	0	STS02 0	0	SIS020 0	1	0	0	MD022 1	MD021 0	MD020 0

(b) Serial communication operation setting register 02 (SCR02) … Do not manipulate the bits of this register, except the TXE02 and RXE02 bits, during data transmission/reception.

	15	14	13	12	11	10	9	8	7	6	5	4	3	2	1	0
SCR02	TXE02 0	RXE02 1	DAP02 0	CKP02 0	0	EOC02 0	PTC021 0	PTC020 0	DIR02 0	0	SLC021 0	SLC020 1	0	DLS022 1	DLS021 1	DLS020 1

(c) Serial data register 02 (SDR02) (lower 8 bits: SIO10)

	15	14	13	12	11	10	9	8	7	6	5	4	3	2	1	0
SDR02	Baud rate setting							0	transmit data setting							

SIO10

(d) Serial output register 0 (SO0) … Do not manipulate this register during data transmission/reception.

	15	14	13	12	11	10	9	8	7	6	5	4	3	2	1	0
SO0	0	0	0	0	1	CKO02 0/1 Note 1	CKO01 × Note 2	CKO00 × Note 2	0	0	0	0	1	SO02 0/1 Note 1	SO01 × Note 2	SO00 ×

(e) Serial output enable register 0 (SOE0) … Do not manipulate this register during data transmission/reception.

	15	14	13	12	11	10	9	8	7	6	5	4	3	2	1	0
SOE0	0	0	0	0	0	0	0	0	0	0	0	0	0	SOE02 1	SOE01 × Note 2	SOE00 ×

(f) Serial channel start register 0 (SS0) … Do not manipulate this register during data transmission/reception.

	15	14	13	12	11	10	9	8	7	6	5	4	3	2	1	0
SS0	0	0	0	0	0	0	0	0	0	0	0	0	SS03 ×	SS02 0/1	SS01 ×	SS00 ×

(**Note** and **Remark** are listed on the next page.)

Figure 13-100. Example of Contents of Registers for Data Reception of Simplified I2C (IIC10) (2/2)

Notes 1. The value varies depending on the communication data during communication operation.

2. CSI00 and CSI01 are only available in the 44-pin and 48-pin products of the 78K0R/IC3 and in the 78K0R/ID3 and 78K0R/IE3.

Remark □: Setting is fixed in the IIC mode, ■: Setting disabled (set to the initial value)

×: Bit that cannot be used in this mode (set to the initial value when not used in any mode)

0/1: Set to 0 or 1 depending on the usage of the user

(2) Processing flow

Figure 13-101. Timing Chart of Data Reception

(a) When starting data reception

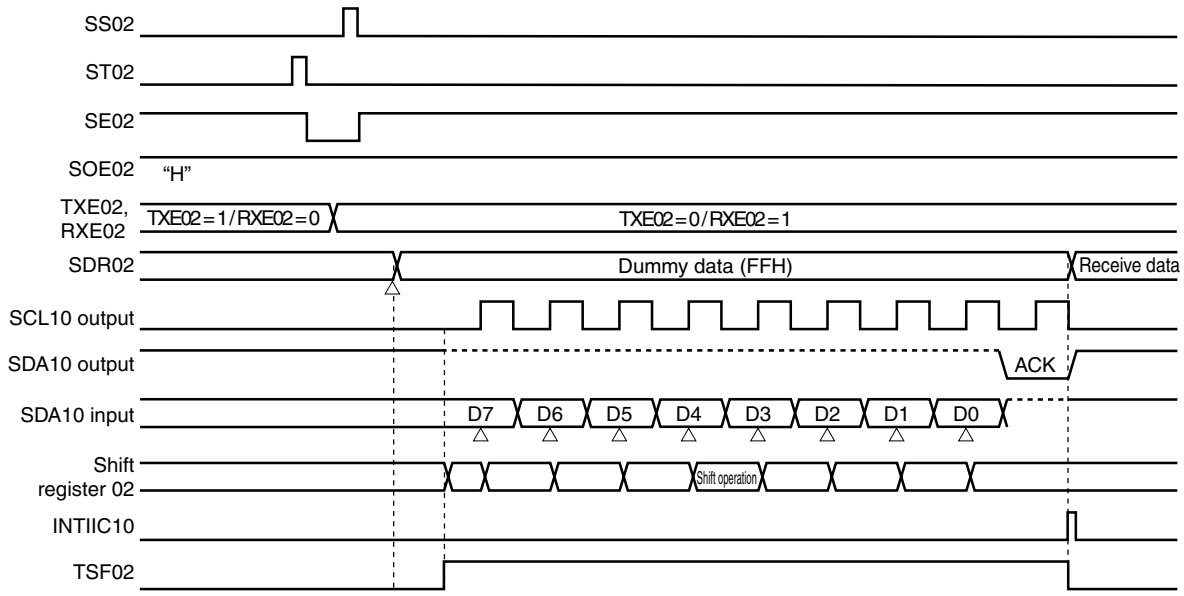

(b) When receiving last data

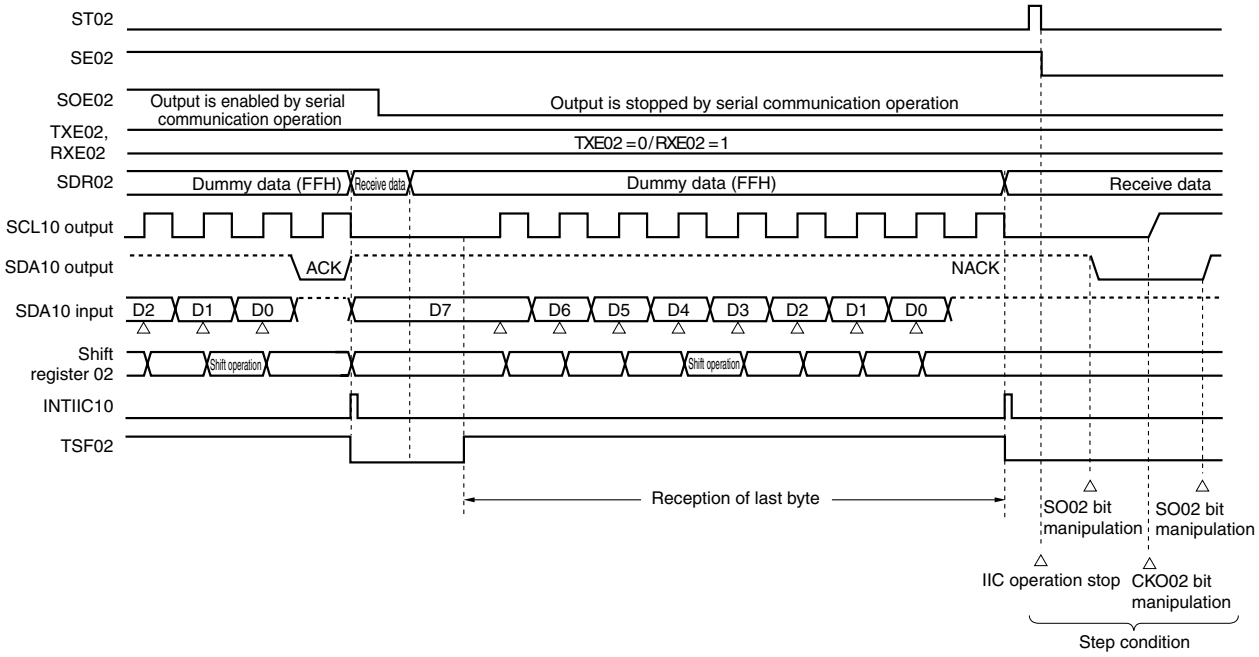

Figure 13-102. Flowchart of Data Reception

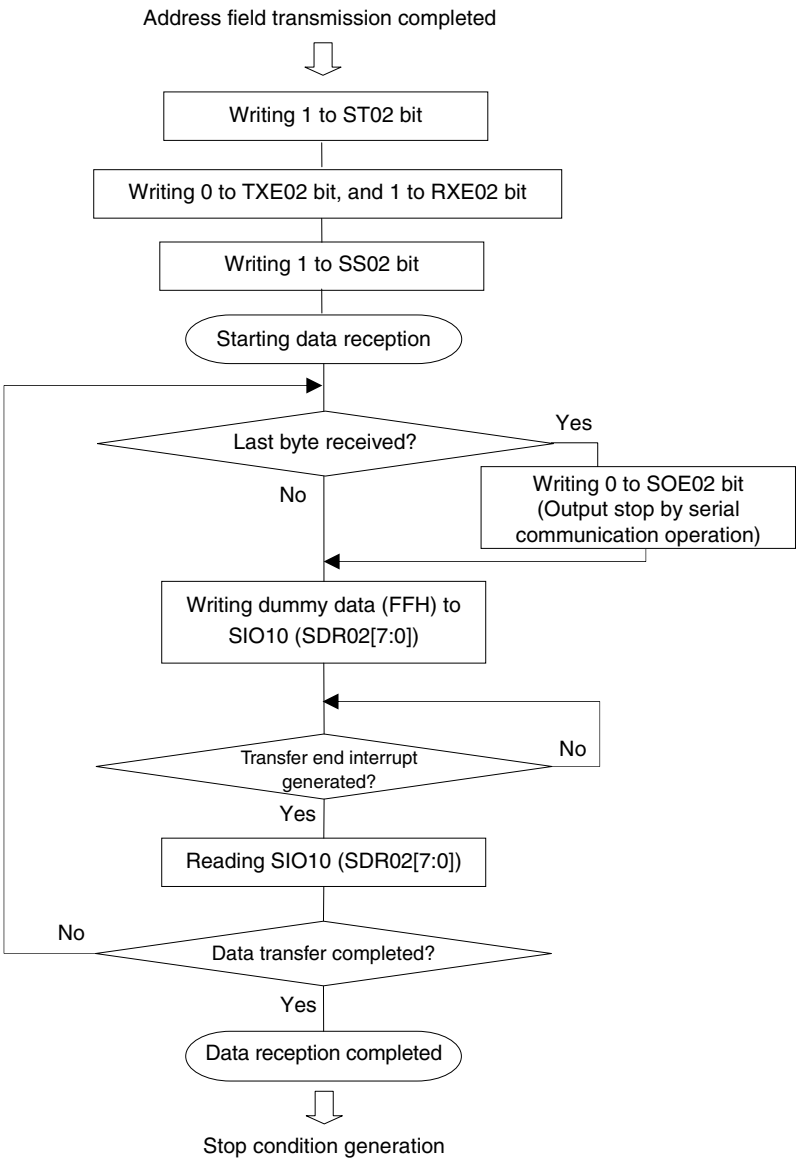

Caution **ACK is not output when the last data is received (NACK). Communication is then completed by setting "1" to the ST02 bit of serial channel stop register 0 (ST0) to stop operation and generating a stop condition.**

13.7.4 Stop condition generation

After all data are transmitted to or received from the target slave, a stop condition is generated and the bus is released.

(1) Processing flow

Figure 13-103. Timing Chart of Stop Condition Generation

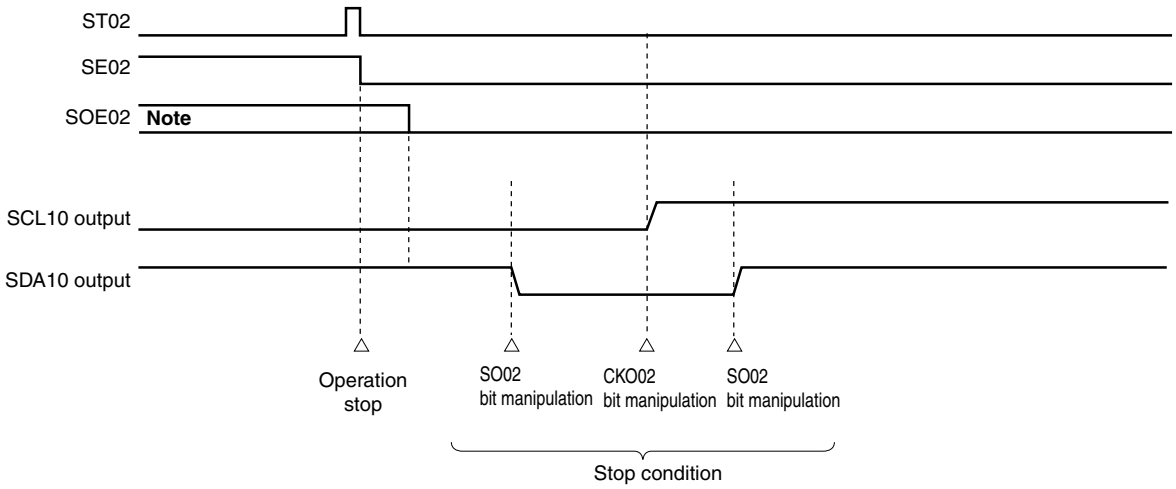

Note During a receive operation, the SOE02 bit of serial output enable register 0 (SOE0) is cleared to 0 before receiving the last data.

Figure 13-104. Flowchart of Stop Condition Generation

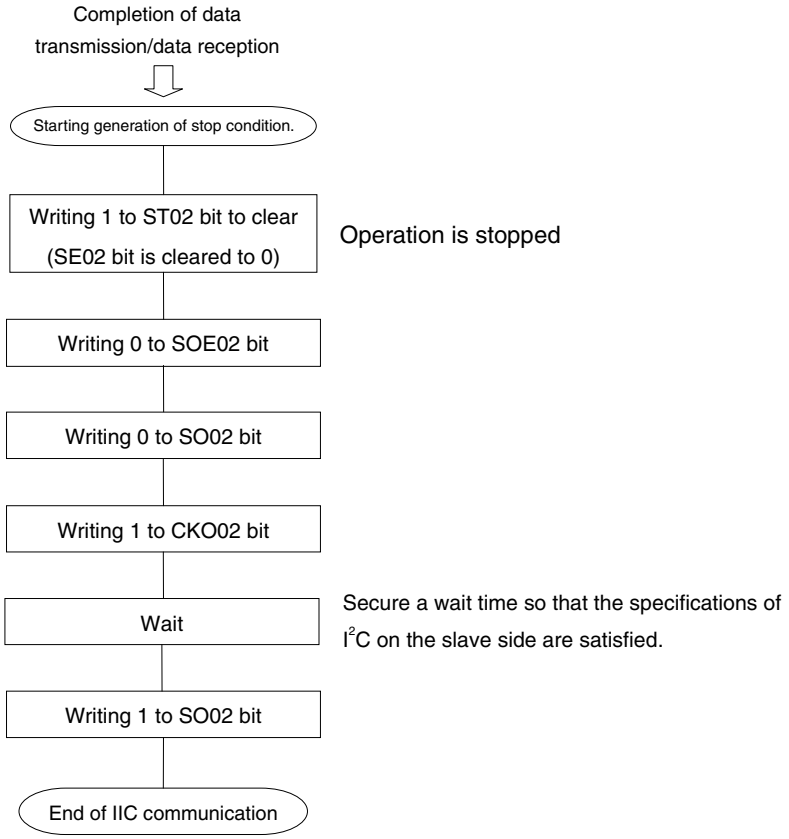

13.7.5 Calculating transfer rate

The transfer rate for simplified I^2C (IIC10) communication can be calculated by the following expressions.

(Transfer rate) = {Operation clock (f_{MCK}) frequency of target channel} ÷ (SDR02[15:9] + 1) ÷ 2

Caution Setting SDR02[15:9] = 0000000B is prohibited. Setting SDR02[15:9] = 0000001B or more.

Remark The value of SDR02[15:9] is the value of bits 15 to 9 of the serial data register 02 (SDR02) (0000001B to 1111111B) and therefore is 1 to 127.

The operation clock (f_{MCK}) is determined by serial clock select register 0 (SPS0) and bit 15 (CKS02) of serial mode register 02 (SMR02).

Table 13-4. Selection of Operation Clock

SMR02 Register	SPS0 Register								Operation Clock (f_{MCK})[Note 1]	
CKS02	PRS 013	PRS 012	PRS 011	PRS 010	PRS 003	PRS 002	PRS 001	PRS 000		f_{CLK} = 20 MHz
0	X	X	X	X	0	0	0	0	f_{CLK}	20 MHz
	X	X	X	X	0	0	0	1	$f_{CLK}/2$	10 MHz
	X	X	X	X	0	0	1	0	$f_{CLK}/2^2$	5 MHz
	X	X	X	X	0	0	1	1	$f_{CLK}/2^3$	2.5 MHz
	X	X	X	X	0	1	0	0	$f_{CLK}/2^4$	1.25 MHz
	X	X	X	X	0	1	0	1	$f_{CLK}/2^5$	625 kHz
	X	X	X	X	0	1	1	0	$f_{CLK}/2^6$	313 kHz
	X	X	X	X	0	1	1	1	$f_{CLK}/2^7$	156 kHz
	X	X	X	X	1	0	0	0	$f_{CLK}/2^8$	78.1 kHz
	X	X	X	X	1	0	0	1	$f_{CLK}/2^9$	39.1 kHz
	X	X	X	X	1	0	1	0	$f_{CLK}/2^{10}$	19.5 kHz
	X	X	X	X	1	0	1	1	$f_{CLK}/2^{11}$	9.77 kHz
	X	X	X	X	1	1	1	1	INTTM02[Note 2]	
1	0	0	0	0	X	X	X	X	f_{CLK}	20 MHz
	0	0	0	1	X	X	X	X	$f_{CLK}/2$	10 MHz
	0	0	1	0	X	X	X	X	$f_{CLK}/2^2$	5 MHz
	0	0	1	1	X	X	X	X	$f_{CLK}/2^3$	2.5 MHz
	0	1	0	0	X	X	X	X	$f_{CLK}/2^4$	1.25 MHz
	0	1	0	1	X	X	X	X	$f_{CLK}/2^5$	625 kHz
	0	1	1	0	X	X	X	X	$f_{CLK}/2^6$	313 kHz
	0	1	1	1	X	X	X	X	$f_{CLK}/2^7$	156 kHz
	1	0	0	0	X	X	X	X	$f_{CLK}/2^8$	78.1 kHz
	1	0	0	1	X	X	X	X	$f_{CLK}/2^9$	39.1 kHz
	1	0	1	0	X	X	X	X	$f_{CLK}/2^{10}$	19.5 kHz
	1	0	1	1	X	X	X	X	$f_{CLK}/2^{11}$	9.77 kHz
	1	1	1	1	X	X	X	X	INTTM02[Note 2]	
Other than above									Setting prohibited	

Notes 1. When changing the clock selected for f_{CLK} (by changing the system clock control register (CKC) value), do so after having stopped (serial channel stop register 0 (ST0) = 000FH) the operation of the serial array unit (SAU). When selecting INTTM02 for the operation clock, also stop the timer array unit TAUS (timer channel stop register 0 (TT0) = 00FFH).

2. SAU can be operated at a fixed division ratio of the subsystem clock, regardless of the f_{CLK} frequency (main system clock and subsystem clock), by operating the interval timer for which $f_{SUB}/4$ has been selected as the count clock (setting TIS02 bit of the timer input select register 0 (TIS0) to 1) and selecting INTTM02 by using the serial clock select register 0 (SPS0) in channel 2 of TAUS. When changing f_{CLK}, however, SAU and TAUS must be stopped as described in Note 1 above.

Remark X: Don't care

Here is an example of setting an IIC transfer rate where $f_{MCK} = f_{CLK} = 20$ MHz.

IIC Transfer Mode (Desired Transfer Rate)	$f_{CLK} = 20$ MHz			
	Operation Clock (f_{MCK})	SDR02[15:9]	Calculated Transfer Rate	Error from Desired Transfer Rate Note
100 kHz	f_{CLK}	99	100 kHz	0.0%
400 kHz	f_{CLK}	24	400 kHz	0.0%

Note This does not include the error related to the oscillation accuracy of the X1 oscillator and internal high-speed oscillator.

13.7.6 Procedure for processing errors that occurred during simplified I²C (IIC10) communication

The procedure for processing errors that occurred during simplified I²C (IIC10) communication is described in Figures 13-105 and 13-106.

Figure 13-105. Processing Procedure in Case of Parity Error or Overrun Error

Software Manipulation	Hardware Status	Remark
Reads serial data register 02 (SDR02). →	The BFF02 bit of the SSR02 register is set to 0 and channel 2 is enabled to receive data.	This is to prevent an overrun error if the next reception is completed during error processing.
Reads serial status register 02 (SSR02).		Error type is identified and the read value is used to clear error flag.
Writes serial flag clear trigger register 02 (SIR02) to 1. →	Error flag is cleared.	Only error generated at the point of reading can be cleared, by writing the value read from the SSR02 register to the SIR02 register without modification.

Figure 13-106. Processing Procedure in Case of Parity Error (ACK error) in Simplified I²C Mode

Software Manipulation	Hardware Status	Remark
Reads serial data register 02 (SDR02). →	The BFF02 bit of the SSR02 register is set to 0 and channel 2 is enabled to receive data.	This is to prevent an overrun error if the next reception is completed during error processing.
Reads serial status register 02 (SSR02).		Error type is identified and the read value is used to clear error flag.
Writes serial flag clear trigger register 02 (SIR02). →	Error flag is cleared.	Error can be cleared only during reading, by writing the value read from the SSR02 register to the SIR02 register without modification.
Sets ST02 bit of the serial channel stop register 0 (ST0) to 1. →	The SE02 bit of the serial channel enable status register 0 (SE0) is set to 0 and channel 2 stops operation.	Slave is not ready for reception because ACK is not returned. Therefore, a stop condition is created, the bus is released, and communication is started again from the start condition. Or, a restart condition is generated and transmission can be redone from address transmission.
Creates stop condition.		
Creates start condition.		
Sets SS02 bit of the serial channel start register 0 (SS0) to 1. →	The SE02 bit of the serial channel enable status register 0 (SE0) is set to 1 and channel 2 is enabled to operate.	

13.8 Relationship Between Register Settings and Pins

Tables 13-5 to 13-12 show the relationship between register settings and pins for each channel of the serial array unit.

13.8.1 Relationship Between Register Settings and Pins of Channel 0

(1) 78K0R/IB3

Table 13-5. Relationship Between Register Settings and Pins (Channel 0: UART0 Reception)

SE00 Note 1	MD002	MD001	SOE00	SO00	TXE00	RXE00	PM10	P10	Operation mode	Pin Function TxD0/TI02/TO02/P10
0	0	1	0	1	0	0	× Note 2	× Note 2	Operation stop mode	TI02/TO02/P10
1	0	1	1	0/1 Note 3	1	0	0	1	UART1 transmission Notes 4	TxD0

Notes 1. SE0 register is a read-only status register which is set using the SS0 register and ST0 register.

2. This pin can be set as a port function pin.

3. This is 0 or 1, depending on the communication operation. For details, refer to **13.3 (12) Serial output register 0 (SO0)**.

4. When using UART0 transmission and reception in a pair, set channel 1 to UART0 reception (refer to **Table 13-8**).

Remark X: Don't care

(2) 38-pin products of 78K0R/IC3

Table 13-6. Relationship Between Register Settings and Pins (Channel 0: UART0 transmission)

SE00 Note 1	MD002	MD001	SOE00	SO00	TXE00	RXE00	PM73	P73	Operation mode	Pin Function TxD0/TO10/P73
0	0	1	0	1	0	0	× Note 2	× Note 2	Operation stop mode	TO10/P73
1	0	1	1	0/1 Note 3	1	0	0	1	UART1 transmission Notes 4	TxD0

Notes 1. SE0 register is a read-only status register which is set using the SS0 register and ST0 register.

2. This pin can be set as a port function pin.

3. This is 0 or 1, depending on the communication operation. For details, refer to **13.3 (12) Serial output register 0 (SO0)**.

4. When using UART0 transmission and reception in a pair, set channel 1 to UART0 reception (refer to **Table 13-9**).

Remark X: Don't care

(3) 44-pin and 48-pin products of 78K0R/IC3, 78K0R/ID3, 78K0R/IE3

Table 13-7. Relationship Between Register Settings and Pins (Channel 0: CSI00, UART0 Transmission)

SE00 Note 1	MD002	MD001	SOE00	SO00	CKO00	TXE00	RXE00	PM75	P75	PM74 Note 2	P74 Note 2	PM73	P73	Operation mode	Pin Function		
															$\overline{\text{SCK00}}$/TI11P75	SI00/RxD0/TI10/P74 Note 2	SO00/TxD0/TO10/P73
0	0	0	0	1	1	0	0	× Note 3	× Note 3	× Note 3	× Note 3	× Note 3	× Note 3	Operation stop mode	TI11/P75	TI10/P74	TO10/P73
	0	1														RxD0/TI10/P74	
1	0	0	0	1	1	0	1	1	×	1	×	× Note 3	× Note 3	Slave CSI00 reception	$\overline{\text{SCK00}}$ (input)	SI00	TO10/P73
			1	0/1 Note 4	1	1	0	1	×	× Note 3	× Note 3	0	1	Slave CSI00 transmission	$\overline{\text{SCK00}}$ (input)	TI10/P74	SO00
			1	0/1 Note 4	1	1	1	1	×	1	×	0	1	Slave CSI00 transmission /reception	$\overline{\text{SCK00}}$ (input)	SI00	SO00
			0	1	0/1 Note 4	0	1	0	1	1	×	× Note 3	× Note 3	Master CSI00 reception	$\overline{\text{SCK00}}$ (output)	SI00	TI10/P73
			1	0/1 Note 4	0/1 Note 4	1	0	0	1	× Note 3	× Note 3	0	1	Master CSI00 transmission	$\overline{\text{SCK00}}$ (output)	TI10/P74	SO00
			1	0/1 Note 4	0/1 Note 4	1	1	0	1	1	×	0	1	Master CSI00 transmission /reception	$\overline{\text{SCK00}}$ (output)	SI00	SO00
	0	1	1	0/1 Note 4	1	1	0	× Note 3	× Note 3	× Note 3	× Note 3	0	1	UART0 transmission Note 5	TI11/P75	RxD0/TI10/P74	TxD0

Notes 1. The serial channel enable register 0 (SE0) is a read-only status register which is set using the serial channel start register 0 (SS0) and serial channel stop register 0 (ST0).

2. When channel 1 is set to UART0 reception, this pin becomes an RxD0 function pin (refer to **Table 13-10**). In this case, operation stop mode or UART0 transmission must be selected for channel 0.

3. This pin can be set as a port function pin.

4. This is 0 or 1, depending on the communication operation. For details, refer to **13.3 (12) Serial output register 0 (SO0)**.

5. When using UART0 transmission and reception in a pair, set channel 1 to UART0 reception (refer to **Table 13-10**).

Remark X: Don't care

13.8.2 Relationship Between Register Settings and Pins of Channel 1

(1) 78K0R/IB3

Table 13-8. Relationship Between Register Settings and Pins (Channel 1: UART0 Reception)

SE01 Note 1	MD012	MD011	TXE01	RXE01	PM11	P11	Operation mode	Pin Function TI03/TO03/RxD0/P11
0	0	1	0	0	× Note 2	× Note 2	Operation stop mode	TI03/TO03/P11
1	0	1	0	1	1	×	UART0 reception Notes 3, 4	RxD0

Notes 1. SE0 register is a read-only status register which is set using the SS0 register and ST0 register.

2. This pin can be set as a port function pin.

3. When using UART0 transmission and reception in a pair, set channel 1 to UART0 transmission (refer to **Table 13-5**).

4. SMR00 register of channel 0 must also be set during UART0 reception. For details, refer to **13.6.2 (1) Register setting**.

Remark X: Don't care

(1) 38-pin products of 78K0R/IC3

Table 13-9. Relationship Between Register Settings and Pins (Channel 1: UART0 Reception)

SE01 Note	MD012	MD011	TXE01	RXE01	PM72	P72	Operation mode	Pin Function INTP6/RxD0/P72
0	0	1	0	0	× Note 2	× Note 2	Operation stop mode	INTP6/P72
1	0	1	0	1	1	×	UART0 reception Notes 3, 4	RxD0

Notes 1. SE0 is a read-only status register which is set using the SS0 and ST0.

2. This pin can be set as a port function pin.

3. When using UART0 transmission and reception in a pair, set channel 1 to UART0 transmission (refer to **Table 13-6**).

4. SMR00 register of channel 0 must also be set during UART0 reception. For details, refer to **13.6.2 (1) Register setting**.

Remark X: Don't care

(3) 44-pin and 48-pin products of 78K0R/IC3, 78K0R/ID3, 78K0R/IE3

Table 13-10. Relationship Between Register Settings and Pins (Channel 1: CSI01, UART0 Reception)

SE01 Note 1	MD012	MD011	SOE01	SO01	CKO01	TXE01	RXE01	PM72	P72	PM71	P71	PM70	P70	PM74 Note 2	P74 Note 2	Operation mode	Pin Function			
																	$\overline{\text{SCK01}}$/INTP6/P72	SI01/INTP5/P71	SO01/INTP4/P70	SI00/RxD0/TI10/P74 Note 2
0	0	0	0	1	1	0	0	× Note 3	× Note 3	× Note 3	× Note 3	× Note 3	× Note 3	× Note 3	× Note 3	Operation stop mode	INTP6/P72	INTP5/P71	INTP4/P70	SI00/TI10/P74
	0	1																		
1	0	0	0	1	1	0	1	1	×	1	×	× Note 3	× Note 3	× Note 3	× Note 3	Slave CSI01 reception	$\overline{\text{SCK01}}$ (input)	SI01	INTP4/P70	SI00/TI10/P74
			1	0/1 Note 4	1	1	0	1	×	× Note 3	× Note 3	0	1	× Note 3	× Note 3	Slave CSI01 transmission	$\overline{\text{SCK01}}$ (input)	NTP5/P71	SO01	SI00/TI10/P74
			1	0/1 Note 4	1	1	1	1	×	1	×	0	1	× Note 3	× Note 3	Slave CSI01 transmission /reception	$\overline{\text{SCK01}}$ (input)	SI01	SO01	SI00/TI10/P74
			0	1	0/1 Note 4	0	1	0	1	1	×	× Note 3	× Note 3	× Note 3	× Note 3	Master CSI01 reception	$\overline{\text{SCK01}}$ (output)	SI01	INTP4/P70	SI00/TI10/P74
			1	0/1 Note 4	0/1 Note 4	1	0	0	1	× Note 3	× Note 3	0	1	× Note 3	× Note 3	Master CSI01 transmission	$\overline{\text{SCK01}}$ (output)	INTP5/P71	SO01	SI00/TI10/P74
			1	0/1 Note 4	0/1 Note 4	1	1	0	1	1	×	0	1	× Note 3	× Note 3	Master CSI01 transmission /reception	$\overline{\text{SCK01}}$ (output)	SI01	SO01	SI00/TI10/P74
	0	1	0	1	1	0	1	× Note 3	× Note 3	× Note 3	× Note 3	× Note 3	× Note 3	1	×	UART0 reception Notes 5, 6	INTP6/P72	INTP5/P71	INTP4/P70	RxD0

Notes 1. The serial channel enable status register 0 (SE0) is a read-only status register which is set using the serial channel statrt register 0 (SS0) and serial channel stop register 0 (ST0).

2. When channel 1 is set to UART0 reception, this pin becomes an RxD0 function pin. In this case, set channel 0 to operation stop mode or UART0 transmission (refer to **Table 13-7**).
When channel 0 is set to CSI00, this pin cannot be used as an RxD0 function pin. In this case, set channel 1 to operation stop mode or CSI01.

3. This pin can be set as a port function pin.

4. This is 0 or 1, depending on the communication operation. For details, refer to **13.3 (12) Serial output register 0 (SO0)**.

5. When using UART0 transmission and reception in a pair, set channel 0 to UART0 transmission (refer to **Table 13-7**).

6. The serial mode register 00 (SMR00) of channel 0 must also be set during UART0 reception. For details, refer to **13.6.2 (1) Register setting**.

Remark X: Don't care

13.8.3 Relationship Between Register Settings and Pins of Channel 2

Table 13-11. Relationship Between Register Settings and Pins (Channel 2: CSI10, UART1 Transmission, IIC10)

SE02 Note 1	MD022	MD021	SOE02	SO02	CKO02	TXE02	RXE02	PM32	P32	PM31 Note 2	P31 Note 2	PM30	P30	Operation mode	Pin Function		
															$\overline{\text{SCK10}}$/ SCL10/ INTP2/P32	SI10/SDA10/ RxD1/INTP1/ /TI09 Note 8 P31 Note 2	SO10/ TxD1/ TO11/P30
0	0	0	0	1	1	0	0	× Note 3	× Note 3	× Note 3	× Note 3	× Note 3	× Note 3	Operation stop mode	INTP2/P32	INTP1/ TI09 Note 8 P31	TO11/P30
	0	1														RxD1/INTP1/ TI09 Note 8/P31	
	1	0														INTP1/ TI09 Note 8 P31	
1	0	0	0	1	1	0	1	1	×	1	×	× Note 3	× Note 3	Slave CSI10 reception	$\overline{\text{SCK10}}$ (input)	SI10	TO11/P30
			1	0/1 Note 4	1	1	0	1	×	× Note 3	× Note 3	0	1	Slave CSI10 transmission	$\overline{\text{SCK10}}$ (input)	INTP1/ TI09 Note 8 P31	SO10
			1	0/1 Note 4	1	1	1	1	×	1	×	0	1	Slave CSI10 transmission /reception	$\overline{\text{SCK10}}$ (input)	SI10	SO10
			0	1	0/1 Note 4	0	1	0	1	1	×	× Note 3	× Note 3	Master CSI10 reception	$\overline{\text{SCK10}}$ (output)	SI10	TO11/P30
			1	0/1 Note 4	0/1 Note 4	1	0	0	1	× Note 3	× Note 3	0	1	Master CSI10 transmission	$\overline{\text{SCK10}}$ (output)	INTP1/ TI09 Note 8 P31	SO10
			1	0/1 Note 4	0/1 Note 4	1	1	0	1	1	×	0	1	Master CSI10 transmission /reception	$\overline{\text{SCK10}}$ (output)	SI10	SO10
	0	1	1	0/1 Note 4	1	1	0	× Note 3	× Note 3	× Note 3	× Note 3	0	1	UART1 transmission Note5	INTP2/P32	RxD1/INTP1/ TI09 Note 8/P31	TxD1
0	1	0	0	0/1 Note 6	0/1 Note 6	0	0	0	1	0	1	× Note 3	× Note 3	IIC10 start condition	SCL10	SDA10	TO11/P30
						1	0										
						0	1										
1			1	0/1 Note 4	0/1 Note 4	1	0	0	1	0	1	× Note 3	× Note 3	IIC10 address field transmission	SCL10	SDA10	TO11/P30
			1	0/1 Note 4	0/1 Note 4	1	0	0	1	0	1	× Note 3	× Note 3	IIC10 data transmission	SCL10	SDA10	TO11/P30
			1	0/1 Note 4	0/1 Note 4	0	1	0	1	0	1	× Note 3	× Note 3	IIC10 data reception	SCL10	SDA10	TO11/P30
0			0	0/1 Note 7	0/1 Note 7	0	0	0	1	0	1	× Note 3	× Note 3	IIC10 stop condition	SCL10	SDA10	TO11/P30
						1	0										
						0	1										

(**Note** and **Remark** are listed on the next page.)

Notes 1. SE0 register is a read-only status register which is set using the SS0 register and ST0 register.

2. When channel 3 is set to UART1 reception, this pin becomes an RxD1 function pin (refer to **Table 13-12**). In this case, operation stop mode or UART1 transmission must be selected for channel 2.

3. This pin can be set as a port function pin.

4. This is 0 or 1, depending on the communication operation. For details, refer to **13.3 (12) Serial output register 0 (SO0)**.

5. When using UART1 transmission and reception in a pair, set channel 3 to UART1 reception (refer to **Table 13-12**).

6. Set the CKO02 bit to 1 before a start condition is generated. Clear the SO02 bit from 1 to 0 when the start condition is generated.

7. Set the CKO02 bit to 1 before a stop condition is generated. Clear the SO02 bit from 0 to 1 when the stop condition is generated.

8. There is no alternate function of TI09 pin, in 78K0R/IE3.

Remark X: Don't care

13.8.4 Relationship Between Register Settings and Pins of Channel 3

Table 13-12. Relationship Between Register Settings and Pins (Channel 3: UART1 Reception)

SE03[Note 1]	MD032	MD031	TXE03	RXE03	PM31[Note 2]	P31[Note 2]	Operation mode	Pin Function
								SI10/SDA10/RxD1/INTP1/ TI09[Note 6]/P31[Note 2]
0	0	1	0	0	×[Note 3]	×[Note 3]	Operation stop mode	SI10/SDA10/INTP1/ TI09[Note 6]/P31[Note 2]
1	0	1	0	1	1	×	UART1 reception [Notes 4, 5]	RxD1

Notes 1. SE0 register is a read-only status register which is set using the SS0 register and ST0 register.

2. When channel 3 is set to UART1 reception, this pin becomes an RxD1 function pin. In this case, set channel 2 to operation stop mode or UART1 transmission (refer to **Table 13-11**).
When channel 2 is set to CSI10 or IIC10, this pin cannot be used as an RxD1 function pin. In this case, set channel 3 to operation stop mode.

3. This pin can be set as a port function pin.

4. When using UART1 transmission and reception in a pair, set channel 2 to UART1 transmission (refer to **Table 13-11**).

5. The SMR02 register of channel 2 must also be set during UART1 reception. For details, refer to **13.6.2 (1) Register setting**.

6. There is no alternate function of TI09 pin, in the 78K0R/IE3.

Remark X: Don't care

CHAPTER 14 SERIAL INTERFACE IICA

Remark Serial interface IICA is only mounted in the 48-pin products of the 78K0R/IC3, 78K0R/ID3, and 78K0R/IE3.

14.1 Functions of Serial Interface IICA

Serial interface IICA has the following three modes.

(1) Operation stop mode

This mode is used when serial transfers are not performed. It can therefore be used to reduce power consumption.

(2) I^2C bus mode (multimaster supported)

This mode is used for 8-bit data transfers with several devices via two lines: a serial clock (SCL0) line and a serial data bus (SDA0) line.

This mode complies with the I^2C bus format and the master device can generated “start condition”, “address”, “transfer direction specification”, “data”, and “stop condition” data to the slave device, via the serial data bus. The slave device automatically detects these received status and data by hardware. This function can simplify the part of application program that controls the I^2C bus.

Since the SCL0 and SDA0 pins are used for open drain outputs, IICA requires pull-up resistors for the serial clock line and the serial data bus line.

(3) Wakeup mode

The STOP mode can be released by generating an interrupt request signal (INTIICA) when an extension code from the master device or a local address has been received while in STOP mode. This can be set by using the WUP bit of IICA control register 1 (IICCTL1).

Figure 14-1 shows a block diagram of serial interface IICA.

Figure 14-1. Block Diagram of Serial Interface IICA

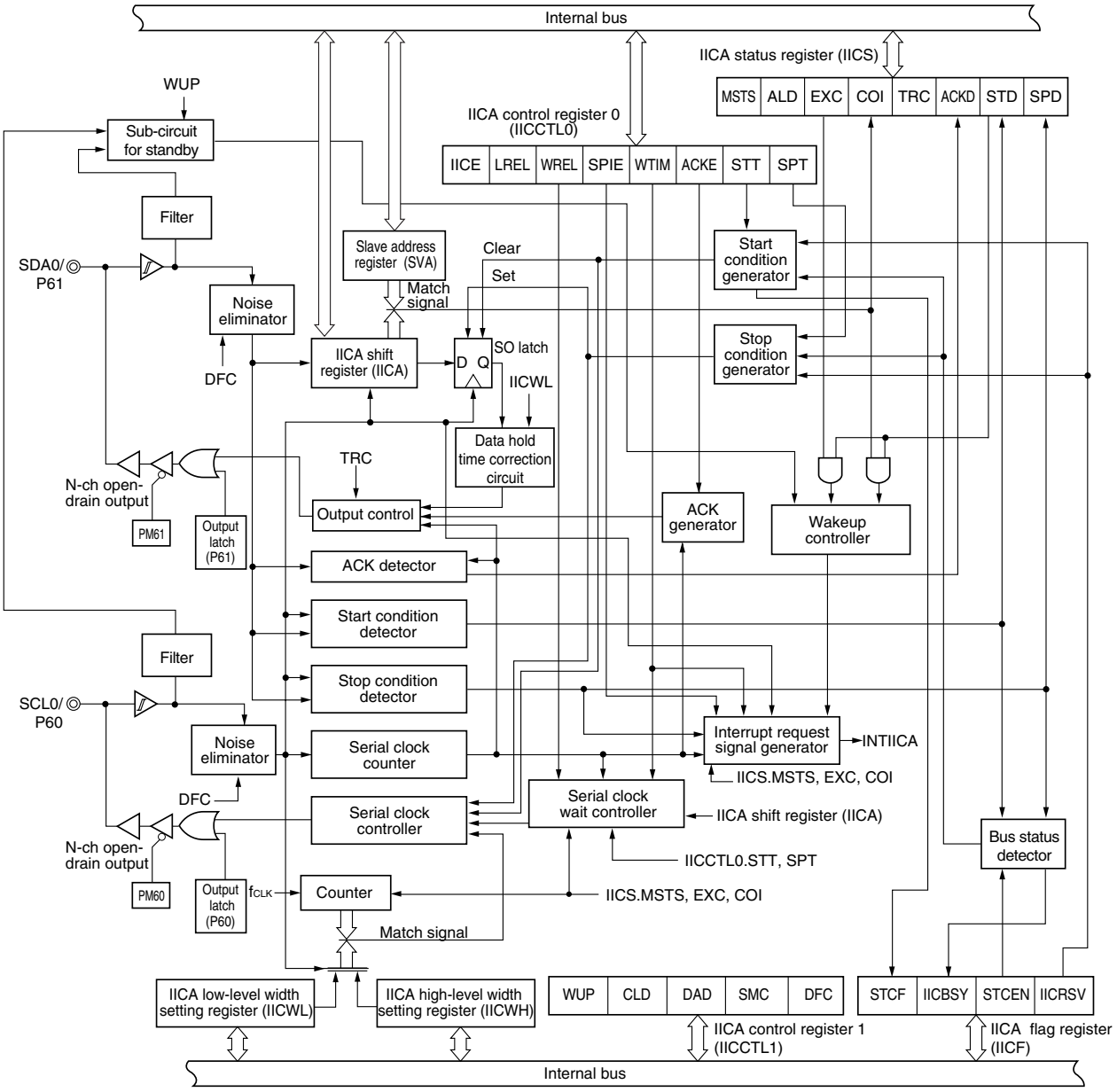

Figure 14-2 shows a serial bus configuration example.

Figure 14-2. Serial Bus Configuration Example Using I²C Bus

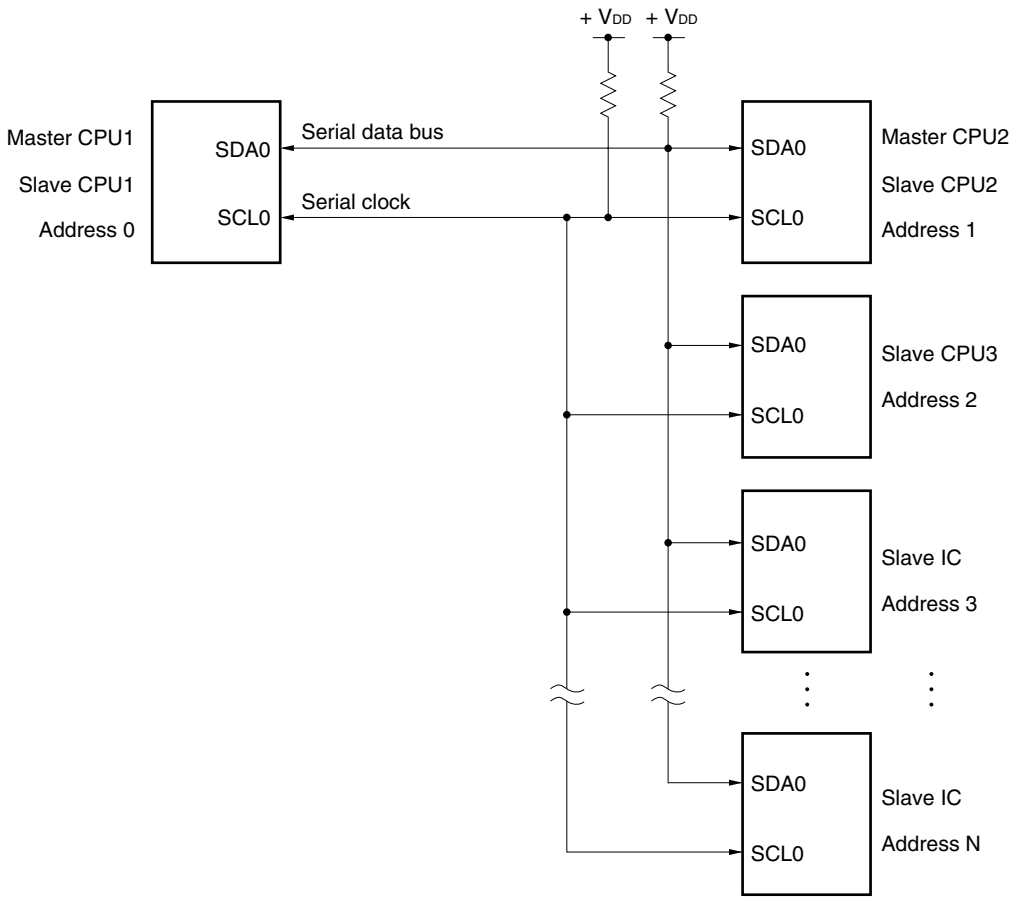

14.2 Configuration of Serial Interface IICA

Serial interface IICA includes the following hardware.

Table 14-1. Configuration of Serial Interface IICA

Item	Configuration
Registers	IICA shift register (IICA) Slave address register (SVA)
Control registers	Peripheral enable register 0 (PER0) IICA control register 0 (IICCTL0) IICA status register (IICS) IICA flag register (IICF) IICA control register 1 (IICCTL1) IICA low-level width setting register (IICWL) IICA high-level width setting register (IICWH) Port mode register 6 (PM6) Port register 6 (P6)

(1) IICA shift register (IICA)

IICA is used to convert 8-bit serial data to 8-bit parallel data and vice versa in synchronization with the serial clock. IICA can be used for both transmission and reception.

The actual transmit and receive operations can be controlled by writing and reading operations to IICA.

Cancel the wait state and start data transfer by writing data to IICA during the wait period.

IICA can be set by an 8-bit memory manipulation instruction.

Reset signal generation clears IICA to 00H.

Figure 14-3. Format of IICA Shift Register (IICA)

Address: FFF50H After reset: 00H R/W

Symbol	7	6	5	4	3	2	1	0
IICA								

Cautions 1. Do not write data to IICA during data transfer.

2. Write or read IICA only during the wait period. Accessing IICA in a communication state other than during the wait period is prohibited. When the device serves as the master, however, IICA can be written only once after the communication trigger bit (STT) is set to 1.

3. When communication is reserved, write data to IICA after the interrupt triggered by a stop condition is detected.

(2) Slave address register (SVA)

This register stores local addresses when in slave mode.

SVA can be set by an 8-bit memory manipulation instruction.

However, rewriting to this register is prohibited while STD = 1 (while the start condition is detected).

Reset signal generation clears SVA to 00H.

Figure 14-4. Format of Slave Address Register (SVA)

Address: F0234H After reset: 00H R/W

Symbol	7	6	5	4	3	2	1	0
SVA								0[Note]

Note Bit 0 is fixed to 0.

(3) SO latch

The SO latch is used to retain the SDA0 pin's output level.

(4) Wakeup controller

This circuit generates an interrupt request (INTIICA) when the address received by this register matches the address value set to the slave address register (SVA) or when an extension code is received.

(5) Serial clock counter

This counter counts the serial clocks that are output or input during transmit/receive operations and is used to verify that 8-bit data was transmitted or received.

(6) Interrupt request signal generator

This circuit controls the generation of interrupt request signals (INTIICA).

An I^2C interrupt request is generated by the following two triggers.

- Falling edge of eighth or ninth clock of the serial clock (set by WTIM bit)
- Interrupt request generated when a stop condition is detected (set by SPIE bit)

Remark WTIM bit: Bit 3 of IICA control register 0 (IICCTL0)
SPIE bit: Bit 4 of IICA control register 0 (IICCTL0)

(7) Serial clock controller

In master mode, this circuit generates the clock output via the SCL0 pin from a sampling clock.

(8) Serial clock wait controller

This circuit controls the wait timing.

(9) ACK generator, stop condition detector, start condition detector, and ACK detector

These circuits generate and detect each status.

(10) Data hold time correction circuit

This circuit generates the hold time for data corresponding to the falling edge of the serial clock.

(11) Start condition generator

This circuit generates a start condition when the STT bit is set to 1.

However, in the communication reservation disabled status (IICRSV bit = 1), when the bus is not released (IICBSY bit = 1), start condition requests are ignored and the STCF bit is set to 1.

(12) Stop condition generator

This circuit generates a stop condition when the SPT bit is set to 1.

(13) Bus status detector

This circuit detects whether or not the bus is released by detecting start conditions and stop conditions. However, as the bus status cannot be detected immediately following operation, the initial status is set by the STCEN bit.

Remark STT bit: Bit 1 of IICA control register 0 (IICCTL0)
SPT bit: Bit 0 of IICA control register 0 (IICCTL0)
IICRSV bit: Bit 0 of IICA flag register (IICF)
IICBSY bit: Bit 6 of IICA flag register (IICF)
STCF bit: Bit 7 of IICA flag register (IICF)
STCEN bit: Bit 1 of IICA flag register (IICF)

14.3 Registers Controlling Serial Interface IICA

Serial interface IICA is controlled by the following eight registers.

- Peripheral enable register 0 (PER0)
- IICA control register 0 (IICCTL0)
- IICA flag register (IICF)
- IICA status register (IICS)
- IICA control register 1 (IICCTL1)
- IICA low-level width setting register (IICWL)
- IICA high-level width setting register (IICWH)
- Port mode register 6 (PM6)
- Port register 6 (P6)

(1) Peripheral enable register 0 (PER0)

PER0 is used to enable or disable supplying the clock to the peripheral hardware macro. Clock supply to a hardware macro that is not used is stopped in order to reduce the power consumption and noise.

When serial interface IICA is used, be sure to set bit 4 (IICAEN) of this register to 1.

PER0 can be set by a 1-bit or 8-bit memory manipulation instruction.

Reset signal generation clears PER0 to 00H.

Figure 14-5. Format of Peripheral Enable Register 0 (PER0)

Address: F00F0H After reset: 00H R/W

Symbol	<7>	6	<5>	<4>	3	<2>	1	0
PER0	RTCEN Note 1	0	ADCEN	IICAEN Note 2	0	SAU0EN	0	0

IICAEN	Control of serial interface IICA input clock
0	Stops input clock supply. • SFR used by serial interface IICA cannot be written. • Serial interface IICA is in the reset status.
1	Enables input clock supply. • SFR used by serial interface IICA can be read/written.

Notes **1.** RTCEN bit is not provided in the 78K0R/IB3. In the 78K0R/IB3, bit 7 of PER0 register is fixed to 0.

2. IICAEN bit is not provided in the 78K0R/IB3 and the 38-pin and 44-pin products of the 78K0R/IC3. In the 78K0R/IB3 and the 38-pin and 44-pin products of the 78K0R/IC3, bit 4 of PER0 register is fixed to 0.

Cautions 1. When setting serial interface IICA, be sure to set IICAEN to 1 first. If IICAEN = 0, writing to a control register of serial interface IICA is ignored, and, even if the register is read, only the default value is read (except for port mode register 6 (PM6), port register 6 (P6)).

2. Be sure to clear bits 0, 1, 3, and 6 (78K0R/IB3: Bits 0, 1, 3, 4, 6, 38-pin and 44-pin of 78K0R/IC3) of the PER0 register to 0.

(2) IICA control register 0 (IICCTL0)

This register is used to enable/stop I^2C operations, set wait timing, and set other I^2C operations.

IICCTL0 can be set by a 1-bit or 8-bit memory manipulation instruction. However, set the SPIE, WTIM, and ACKE bits while IICE bit = 0 or during the wait period. These bits can be set at the same time when the IICE bit is set from “0” to “1”.

Reset signal generation clears this register to 00H.

Figure 14-6. Format of IICA Control Register 0 (IICCTL0) (1/4)

Address: F0230H After reset: 00H R/W

Symbol	<7>	<6>	<5>	<4>	<3>	<2>	<1>	<0>
IICCTL0	IICE	LREL	WREL	SPIE	WTIM	ACKE	STT	SPT

IICE	I^2C operation enable
0	Stop operation. Reset the IICA status register (IICS)[Note 1]. Stop internal operation.
1	Enable operation.
Be sure to set this bit (1) while the SCL0 and SDA0 lines are at high level.	
Condition for clearing (IICE = 0)	Condition for setting (IICE = 1)
• Cleared by instruction • Reset	• Set by instruction

LREL[Notes 2, 3]	Exit from communications
0	Normal operation
1	This exits from the current communications and sets standby mode. This setting is automatically cleared to 0 after being executed. Its uses include cases in which a locally irrelevant extension code has been received. The SCL0 and SDA0 lines are set to high impedance. The following flags of IICA control register 0 (IICCTL0) and IICA status register (IICS) are cleared to 0. • STT • SPT • MSTS • EXC • COI • TRC • ACKD • STD
The standby mode following exit from communications remains in effect until the following communications entry conditions are met. • After a stop condition is detected, restart is in master mode. • An address match or extension code reception occurs after the start condition.	
Condition for clearing (LREL = 0)	Condition for setting (LREL = 1)
• Automatically cleared after execution • Reset	• Set by instruction

WREL[Notes 2, 3]	Wait cancellation
0	Do not cancel wait
1	Cancel wait. This setting is automatically cleared after wait is canceled.
When WREL is set (wait canceled) during the wait period at the ninth clock pulse in the transmission status (TRC = 1), the SDA0 line goes into the high impedance state (TRC = 0).	
Condition for clearing (WREL = 0)	Condition for setting (WREL = 1)
• Automatically cleared after execution • Reset	• Set by instruction

Notes 1. The IICA status register, the STCF and IICBSY bits of the IICF register, and the CLD and DAD bits of the IICCTL1 register are reset.

2. The signal of this bit is invalid while IICE0 is 0.

3. When the LREL and WREL bits are read, 0 is always read.

Caution If the operation of I^2C is enabled (IICE = 1) when the SCL0 line is high level, the SDA0 line is low level, and the digital filter is turned on (DFC of the IICCTL1 register = 1), a start condition will be inadvertently detected immediately. In this case, set (1) the LREL bit by using a 1-bit memory manipulation instruction immediately after enabling operation of I^2C (IICE = 1).

Figure 14-6. Format of IICA Control Register 0 (IICCTL0) (2/4)

SPIE[Note 1]	Enable/disable generation of interrupt request when stop condition is detected
0	Disable
1	Enable
If WUP of the IICCTL1 register is 1, no stop condition interrupt will be generated even if SPIE = 1.	
Condition for clearing (SPIE = 0)	Condition for setting (SPIE = 1)
• Cleared by instruction • Reset	• Set by instruction

WTIM[Note 1]	Control of wait and interrupt request generation
0	Interrupt request is generated at the eighth clock's falling edge. Master mode: After output of eight clocks, clock output is set to low level and wait is set. Slave mode: After input of eight clocks, the clock is set to low level and wait is set for master device.
1	Interrupt request is generated at the ninth clock's falling edge. Master mode: After output of nine clocks, clock output is set to low level and wait is set. Slave mode: After input of nine clocks, the clock is set to low level and wait is set for master device.
An interrupt is generated at the falling edge of the ninth clock during address transfer independently of the setting of this bit. The setting of this bit is valid when the address transfer is completed. When in master mode, a wait is inserted at the falling edge of the ninth clock during address transfers. For a slave device that has received a local address, a wait is inserted at the falling edge of the ninth clock after an acknowledge ($\overline{ACK}$) is issued. However, when the slave device has received an extension code, a wait is inserted at the falling edge of the eighth clock.	
Condition for clearing (WTIM = 0)	Condition for setting (WTIM = 1)
• Cleared by instruction • Reset	• Set by instruction

ACKE[Notes 1, 2]	Acknowledgment control
0	Disable acknowledgment.
1	Enable acknowledgment. During the ninth clock period, the SDA0 line is set to low level.
Condition for clearing (ACKE = 0)	Condition for setting (ACKE = 1)
• Cleared by instruction • Reset	• Set by instruction

Notes 1. The signal of this bit is invalid while IICE0 is 0. Set this bit during that period.

2. The set value is invalid during address transfer and if the code is not an extension code. When the device serves as a slave and the addresses match, an acknowledgment is generated regardless of the set value.

Figure 14-6. Format of IICA Control Register 0 (IICCTL0) (3/4)

STT[Note]	Start condition trigger
0	Do not generate a start condition.
1	When bus is released (in standby state, when IICBSY = 0): If this bit is set (1), a start condition is generated (startup as the master). When a third party is communicating: • When communication reservation function is enabled (IICRSV = 0) Functions as the start condition reservation flag. When set to 1, automatically generates a start condition after the bus is released. • When communication reservation function is disabled (IICRSV = 1) Even if this bit is set (1), the STT bit is cleared and the STT clear flag (STCF) is set (1). No start condition is generated. In the wait state (when master device): Generates a restart condition after releasing the wait.

Cautions concerning set timing

- For master reception: Cannot be set to 1 during transfer. Can be set to 1 only in the waiting period when ACKE has been cleared to 0 and slave has been notified of final reception.
- For master transmission: A start condition cannot be generated normally during the acknowledge period. Set to 1 during the wait period that follows output of the ninth clock.
- Cannot be set to 1 at the same time as SPT.
- Setting STT to 1 and then setting it again before it is cleared to 0 is prohibited.

Condition for clearing (STT = 0)	Condition for setting (STT = 1)
• Cleared by setting STT to 1 while communication reservation is prohibited. • Cleared by loss in arbitration • Cleared after start condition is generated by master device • Cleared by LREL = 1 (exit from communications) • When IICE = 0 (operation stop) • Reset	• Set by instruction

Note The signal of this bit is invalid while IICE0 is 0.

Remarks 1. Bit 1 (STT) becomes 0 when it is read after data setting.

2. IICRSV: Bit 0 of IIC flag register (IICF)

STCF: Bit 7 of IIC flag register (IICF)

Figure 14-6. Format of IICA Control Register 0 (IICCTL0) (4/4)

SPT	Stop condition trigger
0	Stop condition is not generated.
1	Stop condition is generated (termination of master device's transfer).

Cautions concerning set timing

- For master reception: Cannot be set to 1 during transfer.
  Can be set to 1 only in the waiting period when ACKE has been cleared to 0 and slave has been notified of final reception.
- For master transmission: A stop condition cannot be generated normally during the acknowledge period.
  Therefore, set it during the wait period that follows output of the ninth clock.
- Cannot be set to 1 at the same time as STT.
- SPT can be set to 1 only when in master mode.
- When WTIM has been cleared to 0, if SPT is set to 1 during the wait period that follows output of eight clocks, note that a stop condition will be generated during the high-level period of the ninth clock. WTIM should be changed from 0 to 1 during the wait period following the output of eight clocks, and SPT should be set to 1 during the wait period that follows the output of the ninth clock.
- Setting SPT to 1 and then setting it again before it is cleared to 0 is prohibited.

Condition for clearing (SPT = 0)	Condition for setting (SPT = 1)
• Cleared by loss in arbitration • Automatically cleared after stop condition is detected • Cleared by LREL = 1 (exit from communications) • When IICE = 0 (operation stop) • Reset	• Set by instruction

Caution When bit 3 (TRC) of the IICA status register (IICS) is set to 1 (transmission status), bit 5 (WREL) of IICCTL0 is set to 1 during the ninth clock and wait is canceled, after which TRC bit is cleared (reception status) and the SDA0 line is set to high impedance. Release the wait performed while TRC bit is 1 (transmission status) by writing to the IICA shift register.

Remark Bit 0 (SPT) becomes 0 when it is read after data setting.

(3) IICA status register (IICS)

This register indicates the status of I^2C.

IICS is read by a 1-bit or 8-bit memory manipulation instruction only when STT = 1 and during the wait period.

Reset signal generation clears this register to 00H.

Caution Reading the IICS register while the address match wakeup function is enabled (WUP = 1) in STOP mode is prohibited. When WUP is changed from 1 to 0 (wakeup operation is stopped), regardless of the INTIICA interrupt request, the change in status is not reflected until the next start condition or stop condition is detected. To use the wakeup function, therefore, enable (SPIE = 1) the interrupt generated by detecting a stop condition and read the IICS register after the interrupt has been detected.

Figure 14-7. Format of IICA Status Register (IICS) (1/3)

Address: FFF51H After reset: 00H R

Symbol	<7>	<6>	<5>	<4>	<3>	<2>	<1>	<0>
IICS	MSTS	ALD	EXC	COI	TRC	ACKD	STD	SPD

MSTS	Master device status
0	Slave device status or communication standby status
1	Master device communication status

Condition for clearing (MSTS = 0)	Condition for setting (MSTS = 1)
• When a stop condition is detected • When ALD = 1 (arbitration loss) • Cleared by LREL = 1 (exit from communications) • When IICE changes from 1 to 0 (operation stop) • Reset	• When a start condition is generated

ALD	Detection of arbitration loss
0	This status means either that there was no arbitration or that the arbitration result was a “win”.
1	This status indicates the arbitration result was a “loss”. MSTS is cleared.

Condition for clearing (ALD = 0)	Condition for setting (ALD = 1)
• Automatically cleared after IICS is read[Note] • When IICE changes from 1 to 0 (operation stop) • Reset	• When the arbitration result is a “loss”.

EXC	Detection of extension code reception
0	Extension code was not received.
1	Extension code was received.

Condition for clearing (EXC = 0)	Condition for setting (EXC = 1)
• When a start condition is detected • When a stop condition is detected • Cleared by LREL = 1 (exit from communications) • When IICE changes from 1 to 0 (operation stop) • Reset	• When the higher four bits of the received address data is either “0000” or “1111” (set at the rising edge of the eighth clock).

Note This register is also cleared when a 1-bit memory manipulation instruction is executed for bits other than IICS. Therefore, when using the ALD bit, read the data of this bit before the data of the other bits.

Remark LREL: Bit 6 of IICA control register 0 (IICCTL0)
IICE: Bit 7 of IICA control register 0 (IICCTL0)

Figure 14-7. Format of IICA Status Register (IICS) (2/3)

COI	Detection of matching addresses
0	Addresses do not match.
1	Addresses match.

Condition for clearing (COI = 0)	Condition for setting (COI = 1)
• When a start condition is detected • When a stop condition is detected • Cleared by LREL = 1 (exit from communications) • When IICE changes from 1 to 0 (operation stop) • Reset	• When the received address matches the local address (slave address register (SVA)) (set at the rising edge of the eighth clock).

TRC	Detection of transmit/receive status
0	Receive status (other than transmit status). The SDA0 line is set for high impedance.
1	Transmit status. The value in the SO0 latch is enabled for output to the SDA0 line (valid starting at the falling edge of the first byte's ninth clock).

Condition for clearing (TRC = 0)	Condition for setting (TRC = 1)
<Both master and slave> • When a stop condition is detected • Cleared by LREL = 1 (exit from communications) • When IICE changes from 1 to 0 (operation stop) • Cleared by WREL = 1[Note] (wait cancel) • When ALD changes from 0 to 1 (arbitration loss) • Reset • When not used for communication (MSTS, EXC, COI = 0)) <Master> • When "1" is output to the first byte's LSB (transfer direction specification bit) <Slave> • When a start condition is detected • When "0" is input to the first byte's LSB (transfer direction specification bit)	<Master> • When a start condition is generated • When 0 (master transmission) is output to the LSB (transfer direction specification bit) of the first byte (during address transfer) <Slave> • When 1 (slave transmission) is input to the LSB (transfer direction specification bit) of the first byte from the master (during address transfer)

Note When bit 3 (TRC) of the IICA status register (IICS) is set to 1 (transmission status), bit 5 (WREL) of IICCTL0 is set to 1 during the ninth clock and wait is canceled, after which TRC bit is cleared (reception status) and the SDA0 line is set to high impedance. Release the wait performed while TRC bit is 1 (transmission status) by writing to the IICA shift register.

Remark LREL: Bit 6 of IICA control register 0 (IICCTL0)
IICE: Bit 7 of IICA control register 0 (IICCTL0)

Figure 14-7. Format of IICA Status Register (IICS) (3/3)

ACKD	Detection of acknowledge ($\overline{ACK}$)
0	Acknowledge was not detected.
1	Acknowledge was detected.

Condition for clearing (ACKD = 0)	Condition for setting (ACKD = 1)
• When a stop condition is detected • At the rising edge of the next byte's first clock • Cleared by LREL = 1 (exit from communications) • When IICE changes from 1 to 0 (operation stop) • Reset	• After the SDA0 line is set to low level at the rising edge of SCL0's ninth clock

STD	Detection of start condition
0	Start condition was not detected.
1	Start condition was detected. This indicates that the address transfer period is in effect.

Condition for clearing (STD = 0)	Condition for setting (STD = 1)
• When a stop condition is detected • At the rising edge of the next byte's first clock following address transfer • Cleared by LREL = 1 (exit from communications) • When IICE changes from 1 to 0 (operation stop) • Reset	• When a start condition is detected

SPD	Detection of stop condition
0	Stop condition was not detected.
1	Stop condition was detected. The master device's communication is terminated and the bus is released.

Condition for clearing (SPD = 0)	Condition for setting (SPD = 1)
• At the rising edge of the address transfer byte's first clock following setting of this bit and detection of a start condition • When IICE changes from 1 to 0 (operation stop) • Reset	• When a stop condition is detected

Remark LREL: Bit 6 of IICA control register 0 (IICCTL0)
IICE: Bit 7 of IICA control register 0 (IICCTL0)

(4) IICA flag register (IICF)

This register sets the operation mode of I^2C and indicates the status of the I^2C bus.

IICF can be set by a 1-bit or 8-bit memory manipulation instruction. However, the STCF and IICBSY bits are read-only.

The IICRSV bit can be used to enable/disable the communication reservation function.

STCEN can be used to set the initial value of the IICBSY bit.

IICRSV and STCEN can be written only when the operation of I^2C is disabled (bit 7 (IICE) of IICA control register 0 (IICCTL0) = 0). When operation is enabled, the IICF register can be read.

Reset signal generation clears this register to 00H.

Figure 14-8. Format of IICA Flag Register (IICF)

Address: FFF52H After reset: 00H R/W[Note]

Symbol	<7>	<6>	5	4	3	2	<1>	<0>
IICF	STCF	IICBSY	0	0	0	0	STCEN	IICRSV

STCF	STT clear flag
0	Generate start condition
1	Start condition generation unsuccessful: clear STT flag

Condition for clearing (STCF = 0)	Condition for setting (STCF = 1)
• Cleared by STT = 1 • When IICE = 0 (operation stop) • Reset	• Generating start condition unsuccessful and STT cleared to 0 when communication reservation is disabled (IICRSV = 1).

IICBSY	I^2C bus status flag
0	Bus release status (communication initial status when STCEN = 1)
1	Bus communication status (communication initial status when STCEN = 0)

Condition for clearing (IICBSY = 0)	Condition for setting (IICBSY = 1)
• Detection of stop condition • When IICE = 0 (operation stop) • Reset	• Detection of start condition • Setting of IICE when STCEN = 0

STCEN	Initial start enable trigger
0	After operation is enabled (IICE = 1), enable generation of a start condition upon detection of a stop condition.
1	After operation is enabled (IICE = 1), enable generation of a start condition without detecting a stop condition.

Condition for clearing (STCEN = 0)	Condition for setting (STCEN = 1)
• Cleared by instruction • Detection of start condition • Reset	• Set by instruction

IICRSV	Communication reservation function disable bit
0	Enable communication reservation
1	Disable communication reservation

Condition for clearing (IICRSV = 0)	Condition for setting (IICRSV = 1)
• Cleared by instruction • Reset	• Set by instruction

Note Bits 6 and 7 are read-only.

Cautions 1. Write to STCEN only when the operation is stopped (IICE = 0).

2. As the bus release status (IICBSY = 0) is recognized regardless of the actual bus status when STCEN = 1, when generating the first start condition (STT = 1), it is necessary to verify that no third party communications are in progress in order to prevent such communications from being destroyed.

3. Write to IICRSV only when the operation is stopped (IICE = 0).

Remark STT: Bit 1 of IICA control register 0 (IICCTL0)
IICE: Bit 7 of IICA control register 0 (IICCTL0)

(5) IICA control register 1 (IICCTL1)

This register is used to set the operation mode of I²C and detect the statuses of the SCL0 and SDA0 pins.

IICCTL1 can be set by a 1-bit or 8-bit memory manipulation instruction. However, the CLD and DAD bits are read-only.

Set the IICCTL1 register, except the WUP bit, while operation of I²C is disabled (bit 7 (IICE) of IICA control register 0 (IICCTL0) is 0).

Reset signal generation clears this register to 00H.

Figure 14-9. Format of IICA Control Register 1 (IICCTL1) (1/2)

Address: F0231H After reset: 00H R/W[Note 1]

Symbol	7	6	<5>	<4>	<3>	<2>	1	0
IICCTL1	WUP	0	CLD	DAD	SMC	DFC	0	0

WUP	Control of address match wakeup
0	Stops operation of address match wakeup function in STOP mode.
1	Enables operation of address match wakeup function in STOP mode.

To shift to STOP mode when WUP = 1, execute the STOP instruction at least three clocks after setting (1) WUP (see **Figure 14-22 Flow When Setting WUP = 1**).
Clear (0) WUP after the address has matched or an extension code has been received. The subsequent communication can be entered by clearing (0) WUP. (The wait must be released and transmit data must be written after WUP has been cleared (0).)
The interrupt timing when the address has matched or when an extension code has been received, while WUP = 1, is identical to the interrupt timing when WUP = 0. (A delay of the difference of sampling by the clock will occur.) Furthermore, when WUP = 1, a stop condition interrupt is not generated even if the SPIE bit is set to 1.

Condition for clearing (WUP = 0)	Condition for setting (WUP = 1)
• Cleared by instruction (after address match or extension code reception)	• Set by instruction (when MSTS, EXC, and COI are "0", and STD also "0" (communication not entered))[Note 2]

Notes 1. Bits 4 and 5 are read-only.

2. The status of IIC status register (IICS) must be checked and WUP must be set during the period shown below.

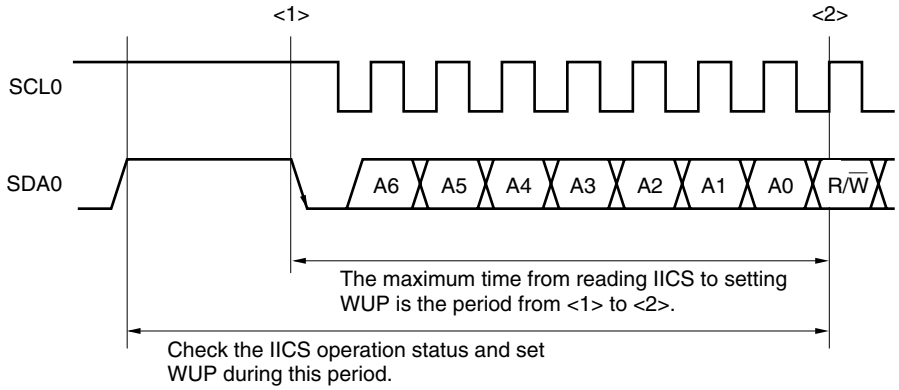

Figure 14-9. Format of IICA Control Register 1 (IICCTL1) (2/2)

CLD	Detection of SCL0 pin level (valid only when IICE = 1)
0	The SCL0 pin was detected at low level.
1	The SCL0 pin was detected at high level.

Condition for clearing (CLD = 0)	Condition for setting (CLD = 1)
• When the SCL0 pin is at low level • When IICE = 0 (operation stop) • Reset	• When the SCL0 pin is at high level

DAD	Detection of SDA0 pin level (valid only when IICE = 1)
0	The SDA0 pin was detected at low level.
1	The SDA0 pin was detected at high level.

Condition for clearing (DAD = 0)	Condition for setting (DAD = 1)
• When the SDA0 pin is at low level • When IICE = 0 (operation stop) • Reset	• When the SDA0 pin is at high level

SMC	Operation mode switching
0	Operates in standard mode.
1	Operates in fast mode.

DFC	Digital filter operation control
0	Digital filter off.
1	Digital filter on.
Digital filter can be used only in fast mode. In fast mode, the transfer clock does not vary, regardless of the DFC bit being set (1) or cleared (0). The digital filter is used for noise elimination in fast mode.	

Remark IICE: Bit 7 of IICA control register 0 (IICCTL0)

(6) IICA low-level width setting register (IICWL)

This register is used to set the low-level width of the SCL0 pin signal that is output by serial interface IICA.
IICWL register can be set by an 8-bit memory manipulation instruction.
Set IICWL register while operation of I^2C is disabled (bit 7 (IICE) of IICA control register 0 (IICCTL0) is 0).
Reset signal generation sets this register to FFH.

Figure 14-10. Format of IICA Low-Level Width Setting Register (IICWL)

Address: F0232H After reset: FFH R/W

Symbol	7	6	5	4	3	2	1	0
IICWL								

(7) IICA high-level width setting register (IICWH)

This register is used to set the high-level width of the SCL0 pin signal that is output by serial interface IICA.
IICWH register can be set by an 8-bit memory manipulation instruction.
Set IICWH register while operation of I^2C is disabled (bit 7 (IICE) of IICA control register 0 (IICCTL0) is 0).
Reset signal generation sets this register to FFH.

Figure 14-11. Format of IICA High-Level Width Setting Register (IICWH)

Address: F0233H After reset: FFH R/W

Symbol	7	6	5	4	3	2	1	0
IICWH								

Remark For how to set the transfer clock by using the IICWL and IICWH registers, see **14.4.2 Setting transfer clock by using IICWL and IICWH registers**.

(8) Port mode register 6 (PM6)

This register sets the input/output of port 6 in 1-bit units.

When using the P60/SCL0 pin as clock I/O and the P61/SDA0 pin as serial data I/O, clear PM60 and PM61, and the output latches of P60 and P61 to 0.

Set IICE (bit 7 of IICA control register 0 (IICCTL0)) to 1 before setting the output mode because the P60/SCL0 and P61/SDA0 pins output a low level (fixed) when IICE is 0.

PM6 can be set by a 1-bit or 8-bit memory manipulation instruction.

Reset signal generation sets this register to FFH.

Figure 14-12. Format of Port Mode Register 6 (PM6)

Address: FFF26H After reset: FFH R/W

Symbol	7	6	5	4	3	2	1	0
PM6	1	1	1	1	1	1	PM61	PM60

PM6n	P6n pin I/O mode selection (n = 0, 1)
0	Output mode (output buffer on)
1	Input mode (output buffer off)

14.4 I²C Bus Mode Functions

14.4.1 Pin configuration

The serial clock pin (SCL0) and serial data bus pin (SDA0) are configured as follows.

(1) SCL0..... This pin is used for serial clock input and output.
This pin is an N-ch open-drain output for both master and slave devices. Input is Schmitt input.

(2) SDA0 ..... This pin is used for serial data input and output.
This pin is an N-ch open-drain output for both master and slave devices. Input is Schmitt input.

Since outputs from the serial clock line and the serial data bus line are N-ch open-drain outputs, an external pull-up resistor is required.

Figure 14-13. Pin Configuration Diagram

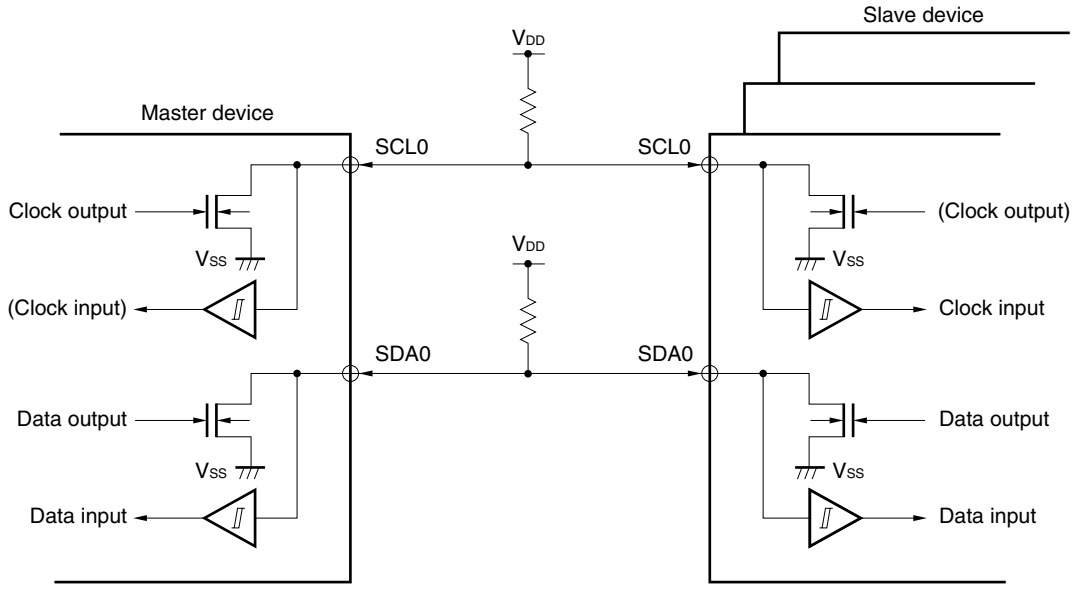

14.4.2 Setting transfer clock by using IICWL and IICWH registers

(1) Setting transfer clock on master side

$$\text{Transfer clock} = \frac{f_{CLK}}{IICWL + IICWH + f_{CLK}(t_R + t_F)}$$

At this time, the optimal setting values of IICWL and IICWH are as follows.
(The fractional parts of all setting values are rounded up.)

- When the fast mode

$$IICWL = \frac{0.52}{\text{Transfer clock}} \times f_{CLK}$$
$$IICWH = \left(\frac{0.48}{\text{Transfer clock}} - t_R - t_F\right) \times f_{CLK}$$

- When the normal mode

$$IICWL = \frac{0.47}{\text{Transfer clock}} \times f_{CLK}$$
$$IICWH = \left(\frac{0.53}{\text{Transfer clock}} - t_R - t_F\right) \times f_{CLK}$$

(2) Setting IICWL and IICWH on slave side
(The fractional parts of all setting values are truncated.)

- When the fast mode

$$IICWL = 1.3\ \mu s \times f_{CLK}$$
$$IICWH = (1.2\ \mu s - t_R - t_F) \times f_{CLK}$$

- When the normal mode

$$IICWL = 4.7\ \mu s \times f_{CLK}$$
$$IICWH = (5.3\ \mu s - t_R - t_F) \times f_{CLK}$$

Caution Note the minimum f_{CLK} operation frequency when setting the transfer clock. The minimum f_{CLK} operation frequency for serial interface IICA is determined according to the mode.
Fast mode: f_{CLK} = 3.5 MHz (MIN.)
Normal mode: f_{CLK} = 1 MHz (MIN.)

Remarks 1. Calculate the rise time (t_R) and fall time (t_F) of the SDA0 and SCLA0 signals separately, because they differ depending on the pull-up resistance and wire load.

2. IICWL: IICA low-level width setting register
IICWH: IICA high-level width setting register
t_F: SDA0 and SCL0 signal falling times
t_R: SDA0 and SCL0 signal rising times
f_{CLK}: CPU/peripheral hardware clock frequency

14.5 I²C Bus Definitions and Control Methods

The following section describes the I²C bus's serial data communication format and the signals used by the I²C bus. Figure 14-14 shows the transfer timing for the "start condition", "address", "data", and "stop condition" output via the I²C bus's serial data bus.

Figure 14-14. I²C Bus Serial Data Transfer Timing

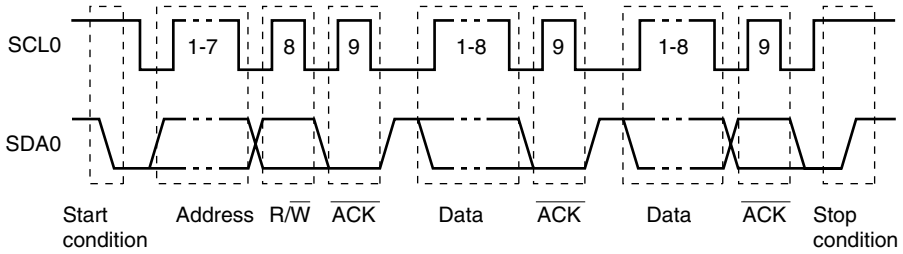

The master device generates the start condition, slave address, and stop condition.
The acknowledge ($\overline{ACK}$) can be generated by either the master or slave device (normally, it is output by the device that receives 8-bit data).

The serial clock (SCL0) is continuously output by the master device. However, in the slave device, the SCL0's low level period can be extended and a wait can be inserted.

14.5.1 Start conditions

A start condition is met when the SCL0 pin is at high level and the SDA0 pin changes from high level to low level. The start conditions for the SCL0 pin and SDA0 pin are signals that the master device generates to the slave device when starting a serial transfer. When the device is used as a slave, start conditions can be detected.

Figure 14-15. Start Conditions

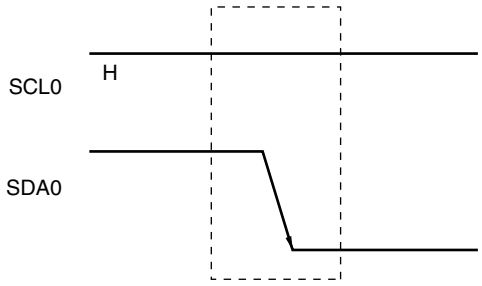

A start condition is output when bit 1 (STT) of IICA control register 0 (IICCTL0) is set (1) after a stop condition has been detected (SPD: Bit 0 of the IICA status register (IICS) = 1). When a start condition is detected, bit 1 (STD) of IICS is set (1).

14.5.2 Addresses

The address is defined by the 7 bits of data that follow the start condition.

An address is a 7-bit data segment that is output in order to select one of the slave devices that are connected to the master device via the bus lines. Therefore, each slave device connected via the bus lines must have a unique address.

The slave devices include hardware that detects the start condition and checks whether or not the 7-bit address data matches the data values stored in the slave address register (SVA). If the address data matches the SVA values, the slave device is selected and communicates with the master device until the master device generates a start condition or stop condition.

Figure 14-16. Address

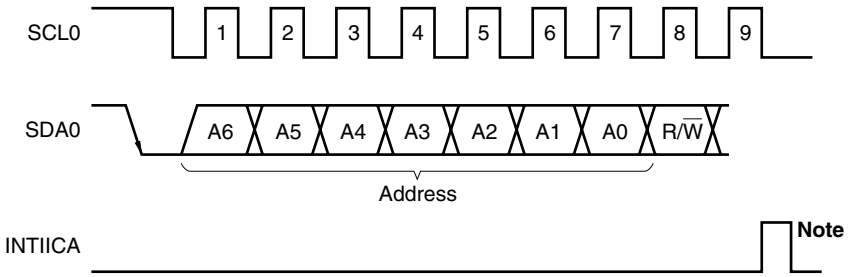

Note INTIICA is not issued if data other than a local address or extension code is received during slave device operation.

Addresses are output when a total of 8 bits consisting of the slave address and the transfer direction described in **14.5.3 Transfer direction specification** are written to the IICA shift register (IICA). The received addresses are written to IICA.

The slave address is assigned to the higher 7 bits of IICA.

14.5.3 Transfer direction specification

In addition to the 7-bit address data, the master device sends 1 bit that specifies the transfer direction.

When this transfer direction specification bit has a value of “0”, it indicates that the master device is transmitting data to a slave device. When the transfer direction specification bit has a value of “1”, it indicates that the master device is receiving data from a slave device.

Figure 14-17. Transfer Direction Specification

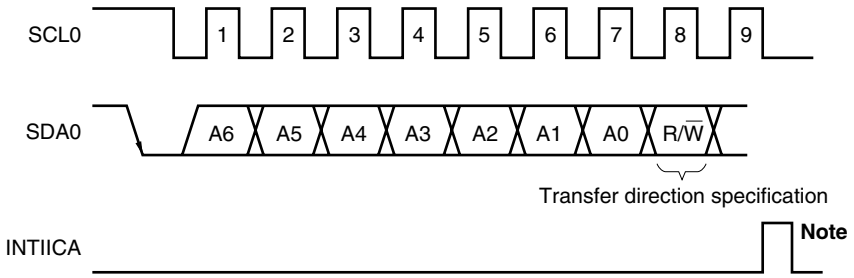

Note INTIICA is not issued if data other than a local address or extension code is received during slave device operation.

14.5.4 Acknowledge ($\overline{\text{ACK}}$)

$\overline{\text{ACK}}$ is used to check the status of serial data at the transmission and reception sides.

The reception side returns $\overline{\text{ACK}}$ each time it has received 8-bit data.

The transmission side usually receives $\overline{\text{ACK}}$ after transmitting 8-bit data. When $\overline{\text{ACK}}$ is returned from the reception side, it is assumed that reception has been correctly performed and processing is continued. Whether $\overline{\text{ACK}}$ has been detected can be checked by using bit 2 (ACKD) of the IICA status register (IICS).

When the master receives the last data item, it does not return $\overline{\text{ACK}}$ and instead generates a stop condition. If a slave does not return $\overline{\text{ACK}}$ after receiving data, the master outputs a stop condition or restart condition and stops transmission. If $\overline{\text{ACK}}$ is not returned, the possible causes are as follows.

<1> Reception was not performed normally.
<2> The final data item was received.
<3> The reception side specified by the address does not exist.

To generate $\overline{\text{ACK}}$, the reception side makes the SDA0 line low at the ninth clock (indicating normal reception).

Automatic generation of $\overline{\text{ACK}}$ is enabled by setting bit 2 (ACKE) of IICA control register 0 (IICCTL0) to 1. Bit 3 (TRC) of the IICS register is set by the data of the eighth bit that follows 7-bit address information. Usually, set ACKE to 1 for reception (TRC = 0).

If a slave can receive no more data during reception (TRC = 0) or does not require the next data item, then the slave must inform the master, by clearing ACKE to 0, that it will not receive any more data.

When the master does not require the next data item during reception (TRC = 0), it must clear ACKE to 0 so that $\overline{\text{ACK}}$ is not generated. In this way, the master informs a slave at the transmission side that it does not require any more data (transmission will be stopped).

Figure 14-18. $\overline{\text{ACK}}$

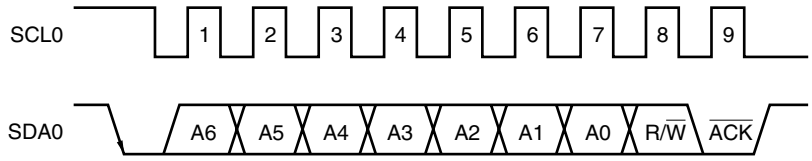

When the local address is received, $\overline{\text{ACK}}$ is automatically generated, regardless of the value of ACKE. When an address other than that of the local address is received, $\overline{\text{ACK}}$ is not generated (NACK).

When an extension code is received, $\overline{\text{ACK}}$ is generated if ACKE is set to 1 in advance.

How $\overline{\text{ACK}}$ is generated when data is received differs as follows depending on the setting of the wait timing.

- When 8-clock wait state is selected (bit 3 (WTIM) of IICCTL0 register = 0):
  By setting ACKE to 1 before releasing the wait state, $\overline{\text{ACK}}$ is generated at the falling edge of the eighth clock of the SCL0 pin.
- When 9-clock wait state is selected (bit 3 (WTIM) of IICCTL0 register = 1):
  $\overline{\text{ACK}}$ is generated by setting ACKE to 1 in advance.

14.5.5 Stop condition

When the SCL0 pin is at high level, changing the SDA0 pin from low level to high level generates a stop condition.

A stop condition is a signal that the master device generates to the slave device when serial transfer has been completed. When the device is used as a slave, stop conditions can be detected.

Figure 14-19. Stop Condition

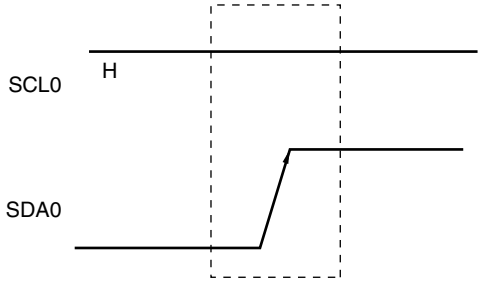

A stop condition is generated when bit 0 (SPT) of IICA control register 0 (IICCTL0) is set to 1. When the stop condition is detected, bit 0 (SPD) of the IICA status register (IICS) is set to 1 and INTIICA is generated when bit 4 (SPIE) of IICCTL0 is set to 1.

14.5.6 Wait

The wait is used to notify the communication partner that a device (master or slave) is preparing to transmit or receive data (in a wait state).

Setting the SCL0 pin to low level notifies the communication partner of the wait state. When wait state has been canceled for both the master and slave devices, the next data transfer can begin.

Figure 14-20. Wait (1/2)

(1) When master device has a nine-clock wait and slave device has an eight-clock wait (master transmits, slave receives, and ACKE = 1)

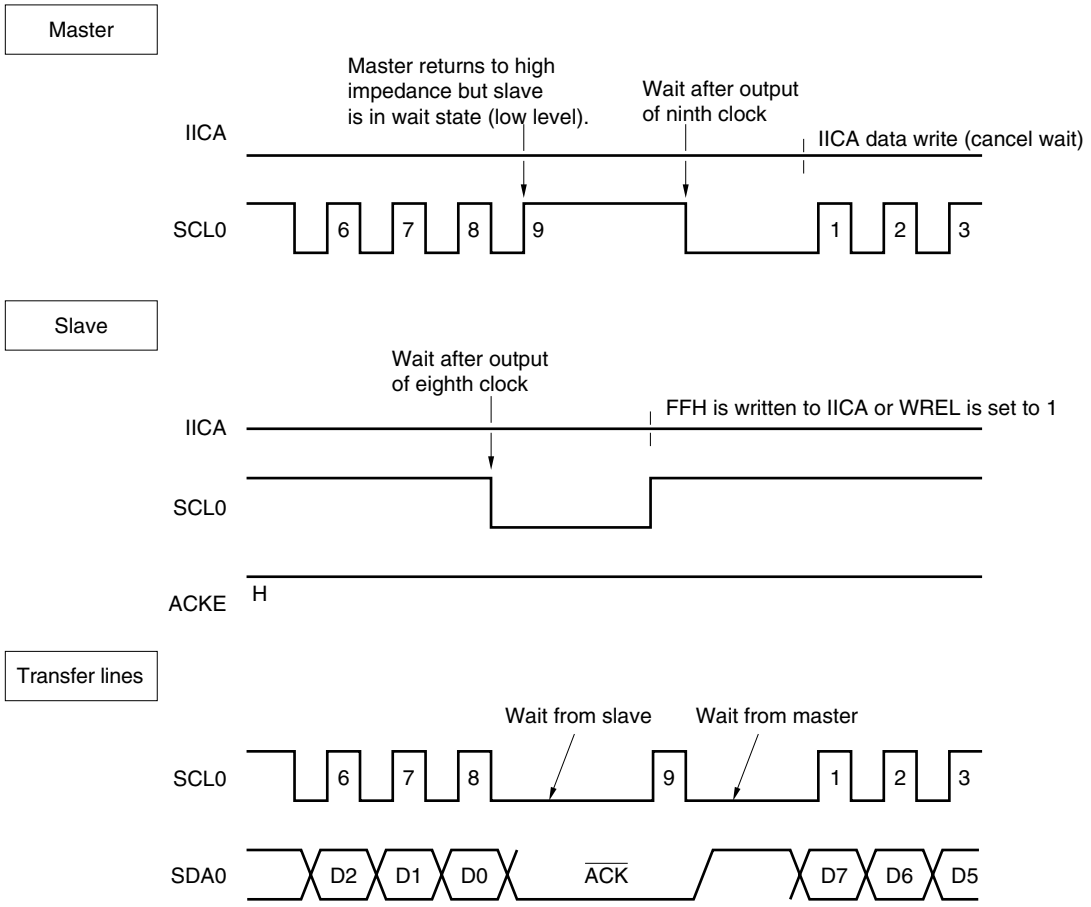

Figure 14-20. Wait (2/2)

(2) When master and slave devices both have a nine-clock wait (master transmits, slave receives, and ACKE = 1)

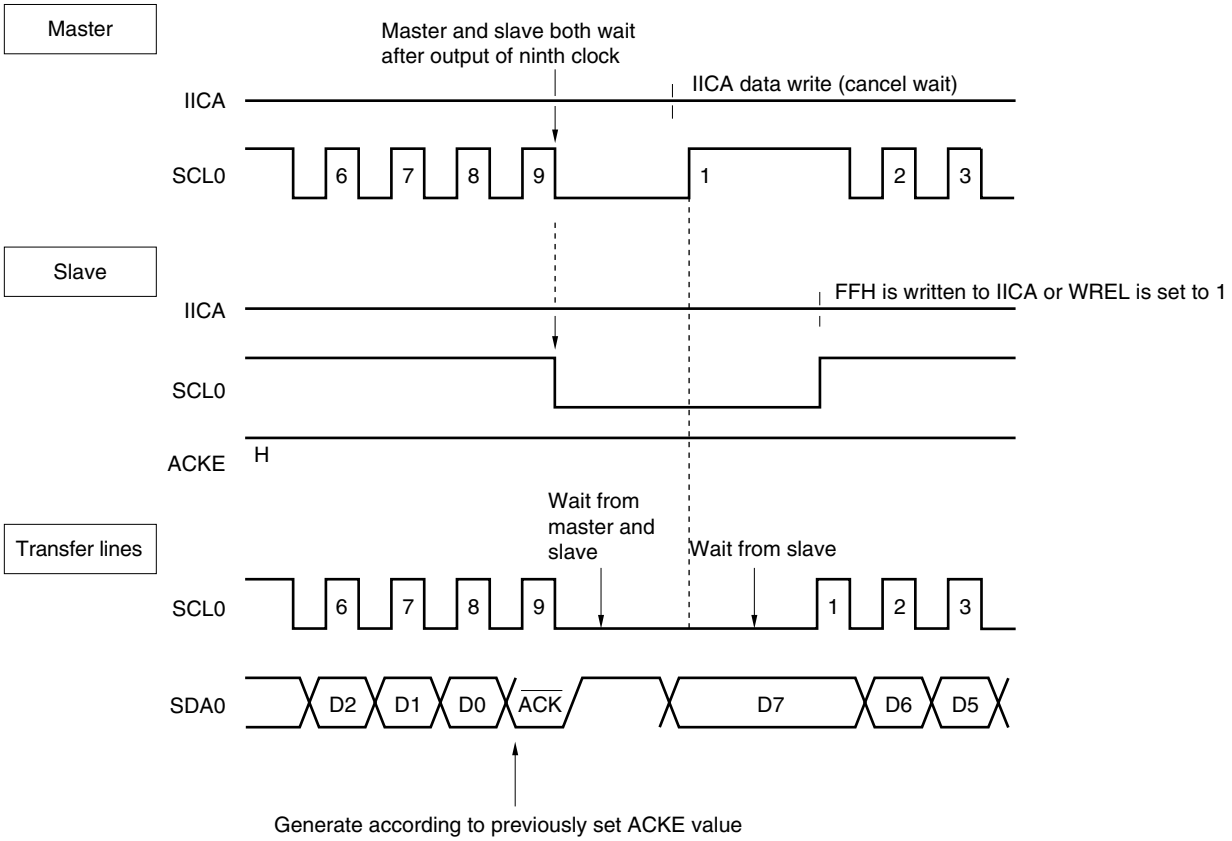

Remark ACKE: Bit 2 of IICA control register 0 (IICCTL0)
WREL: Bit 5 of IICA control register 0 (IICCTL0)

A wait may be automatically generated depending on the setting of bit 3 (WTIM) of IICA control register 0 (IICCTL0).

Normally, the receiving side cancels the wait state when bit 5 (WREL) of IICCTL0 is set to 1 or when FFH is written to the IICA shift register (IICA), and the transmitting side cancels the wait state when data is written to IICA.

The master device can also cancel the wait state via either of the following methods.

- By setting bit 1 (STT) of IICCTL0 to 1
- By setting bit 0 (SPT) of IICCTL0 to 1

14.5.7 Canceling wait

The I^2C usually cancels a wait state by the following processing.

- Writing data to IICA shift register (IICA)
- Setting bit 5 (WREL) of IICA control register 0 (IICCTL0) (canceling wait)
- Setting bit 1 (STT) of IICCTL0 register (generating start condition)[Note]
- Setting bit 0 (SPT) of IICCTL0 register (generating stop condition)[Note]

Note Master only

When the above wait canceling processing is executed, the I^2C cancels the wait state and communication is resumed.

To cancel a wait state and transmit data (including addresses), write the data to IICA.

To receive data after canceling a wait state, or to complete data transmission, set bit 5 (WREL) of IICA control register 0 (IICCTL0) to 1.

To generate a restart condition after canceling a wait state, set bit 1 (STT) of IICCTL0 to 1.

To generate a stop condition after canceling a wait state, set bit 0 (SPT) of IICCTL0 to 1.

Execute the canceling processing only once for one wait state.

If, for example, data is written to IICA after canceling a wait state by setting WREL to 1, an incorrect value may be output to SDA0 because the timing for changing the SDA0 line conflicts with the timing for writing IICA.

In addition to the above, communication is stopped if IICE is cleared to 0 when communication has been aborted, so that the wait state can be canceled.

If the I^2C bus has deadlocked due to noise, processing is saved from communication by setting bit 6 (LREL) of IICCTL0, so that the wait state can be canceled.

Caution If a processing to cancel a wait state is executed when WUP = 1, the wait state will not be canceled.

14.5.8 Interrupt request (INTIICA) generation timing and wait control

The setting of bit 3 (WTIM) of IICA control register 0 (IICCTL0) determines the timing by which INTIICA is generated and the corresponding wait control, as shown in Table 14-2.

Table 14-2. INTIICA Generation Timing and Wait Control

WTIM	During Slave Device Operation			During Master Device Operation		
	Address	Data Reception	Data Transmission	Address	Data Reception	Data Transmission
0	9 Notes 1, 2	8 Note 2	8 Note 2	9	8	8
1	9 Notes 1, 2	9 Note 2	9 Note 2	9	9	9

Notes 1. The slave device's INTIICA signal and wait period occurs at the falling edge of the ninth clock only when there is a match with the address set to the slave address register (SVA).
At this point, $\overline{ACK}$ is generated regardless of the value set to IICCTL0's bit 2 (ACKE). For a slave device that has received an extension code, INTIICA occurs at the falling edge of the eighth clock.
However, if the address does not match after restart, INTIICA is generated at the falling edge of the 9th clock, but wait does not occur.

2. If the received address does not match the contents of the slave address register (SVA) and extension code is not received, neither INTIICA nor a wait occurs.

Remark The numbers in the table indicate the number of the serial clock's clock signals. Interrupt requests and wait control are both synchronized with the falling edge of these clock signals.

(1) During address transmission/reception

- Slave device operation: Interrupt and wait timing are determined depending on the conditions described in Notes 1 and 2 above, regardless of the WTIM bit.
- Master device operation: Interrupt and wait timing occur at the falling edge of the ninth clock regardless of the WTIM bit.

(2) During data reception

- Master/slave device operation: Interrupt and wait timing are determined according to the WTIM bit.

(3) During data transmission

- Master/slave device operation: Interrupt and wait timing are determined according to the WTIM bit.

(4) Wait cancellation method

The four wait cancellation methods are as follows.

- Writing data to IICA shift register (IICA)
- Setting bit 5 (WREL) of IICA control register 0 (IICCTL0) (canceling wait)
- Setting bit 1 (STT) of IICCTL0 register (generating start condition)Note
- Setting bit 0 (SPT) of IICCTL0 register (generating stop condition)Note

Note Master only.

When an 8-clock wait has been selected (WTIM = 0), the presence/absence of $\overline{ACK}$ generation must be determined prior to wait cancellation.

(5) Stop condition detection

INTIICA is generated when a stop condition is detected (only when SPIE = 1).

14.5.9 Address match detection method

In I²C bus mode, the master device can select a particular slave device by transmitting the corresponding slave address.

Address match can be detected automatically by hardware. An interrupt request (INTIICA) occurs when a local address has been set to the slave address register (SVA) and when the address set to SVA matches the slave address sent by the master device, or when an extension code has been received.

14.5.10 Error detection

In I²C bus mode, the status of the serial data bus (SDA0) during data transmission is captured by the IICA shift register (IICA) of the transmitting device, so the IICA data prior to transmission can be compared with the transmitted IICA data to enable detection of transmission errors. A transmission error is judged as having occurred when the compared data values do not match.

14.5.11 Extension code

(1) When the higher 4 bits of the receive address are either “0000” or “1111”, the extension code reception flag (EXC) is set to 1 for extension code reception and an interrupt request (INTIICA) is issued at the falling edge of the eighth clock. The local address stored in the slave address register (SVA) is not affected.

(2) If “11110××0” is set to SVA by a 10-bit address transfer and “11110××0” is transferred from the master device, the results are as follows. Note that INTIICA occurs at the falling edge of the eighth clock.

- Higher four bits of data match: EXC = 1
- Seven bits of data match: COI = 1

Remark EXC: Bit 5 of IICA status register (IICS)
COI: Bit 4 of IICA status register (IICS)

(3) Since the processing after the interrupt request occurs differs according to the data that follows the extension code, such processing is performed by software.
If the extension code is received while a slave device is operating, then the slave device is participating in communication even if its address does not match.
For example, after the extension code is received, if you do not wish to operate the target device as a slave device, set bit 6 (LREL) of the IICA control register 0 (IICCTL0) to 1 to set the standby mode for the next communication operation.

Table 14-3. Bit Definitions of Major Extension Codes

Slave Address	R/W Bit	Description
0 0 0 0 0 0 0	0	General call address
1 1 1 1 0 x x	0	10-bit slave address specification (during address authentication)
1 1 1 1 0 x x	1	10-bit slave address specification (after address match, when read command is issued)

Remark See the I²C bus specifications issued by NXP Semiconductors for details of extension codes other than those described above.

14.5.12 Arbitration

When several master devices simultaneously generate a start condition (when STT is set to 1 before STD is set to 1), communication among the master devices is performed as the number of clocks are adjusted until the data differs. This kind of operation is called arbitration.

When one of the master devices loses in arbitration, an arbitration loss flag (ALD) in the IICA status register (IICS) is set (1) via the timing by which the arbitration loss occurred, and the SCL0 and SDA0 lines are both set to high impedance, which releases the bus.

The arbitration loss is detected based on the timing of the next interrupt request (the eighth or ninth clock, when a stop condition is detected, etc.) and the ALD = 1 setting that has been made by software.

For details of interrupt request timing, see **14.5.8 Interrupt request (INTIICA) generation timing and wait control**.

Remark STD: Bit 1 of IICA status register (IICS)
STT: Bit 1 of IICA control register 0 (IICCTL0)

Figure 14-21. Arbitration Timing Example

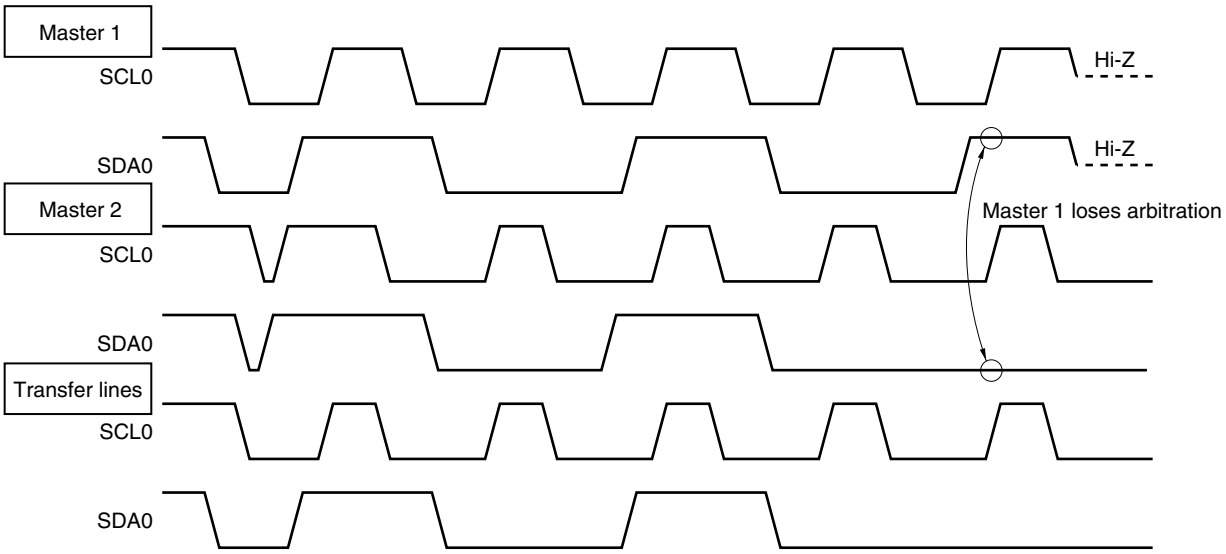

Table 14-4. Status During Arbitration and Interrupt Request Generation Timing

Status During Arbitration	Interrupt Request Generation Timing
During address transmission	At falling edge of eighth or ninth clock following byte transfer[Note 1]
Read/write data after address transmission	
During extension code transmission	
Read/write data after extension code transmission	
During data transmission	
During $\overline{\text{ACK}}$ transfer period after data transmission	
When restart condition is detected during data transfer	
When stop condition is detected during data transfer	When stop condition is generated (when SPIE = 1)[Note 2]
When data is at low level while attempting to generate a restart condition	At falling edge of eighth or ninth clock following byte transfer[Note 1]
When stop condition is detected while attempting to generate a restart condition	When stop condition is generated (when SPIE = 1)[Note 2]
When data is at low level while attempting to generate a stop condition	At falling edge of eighth or ninth clock following byte transfer[Note 1]
When SCL0 is at low level while attempting to generate a restart condition	

Notes 1. When WTIM (bit 3 of IICA control register 0 (IICCTL0)) = 1, an interrupt request occurs at the falling edge of the ninth clock. When WTIM = 0 and the extension code's slave address is received, an interrupt request occurs at the falling edge of the eighth clock.

2. When there is a chance that arbitration will occur, set SPIE = 1 for master device operation.

Remark SPIE: Bit 4 of IICA control register 0 (IICCTL0)

14.5.13 Wakeup function

The I^2C bus slave function is a function that generates an interrupt request signal (INTIICA) when a local address and extension code have been received.

This function makes processing more efficient by preventing unnecessary INTIICA signal from occurring when addresses do not match.

When a start condition is detected, wakeup standby mode is set. This wakeup standby mode is in effect while addresses are transmitted due to the possibility that an arbitration loss may change the master device (which has generated a start condition) to a slave device.

However, when a stop condition is detected, bit 4 (SPIE) of IICA control register 0 (IICCTL0) is set regardless of the wakeup function, and this determines whether interrupt requests are enabled or disabled.

To use the wakeup function in the STOP mode, set WUP to 1. Addresses can be received regardless of the operation clock. An interrupt request signal (INTIICA) is also generated when a local address and extension code have been received. Operation returns to normal operation by using an instruction to clear (0) the WUP bit after this interrupt has been generated.

Figure 14-22 shows the flow for setting WUP = 1 and Figure 14-23 shows the flow for setting WUP = 0 upon an address match.

Figure 14-22. Flow When Setting WUP = 1

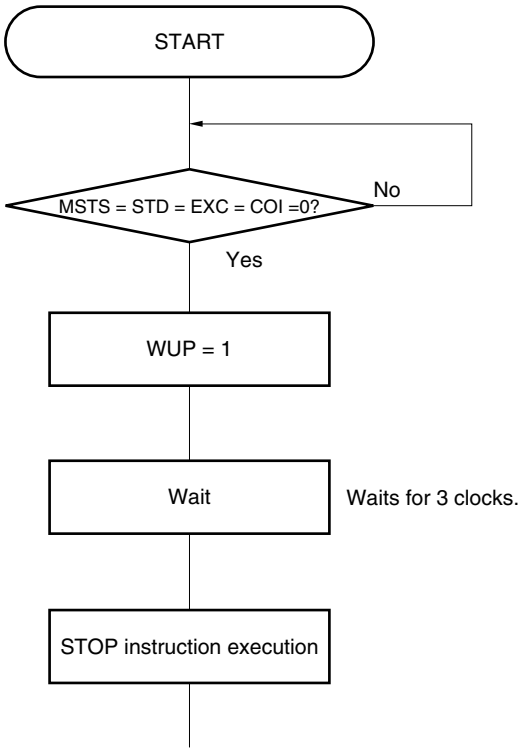

Figure 14-23. Flow When Setting WUP = 0 upon Address Match (Including Extension Code Reception)

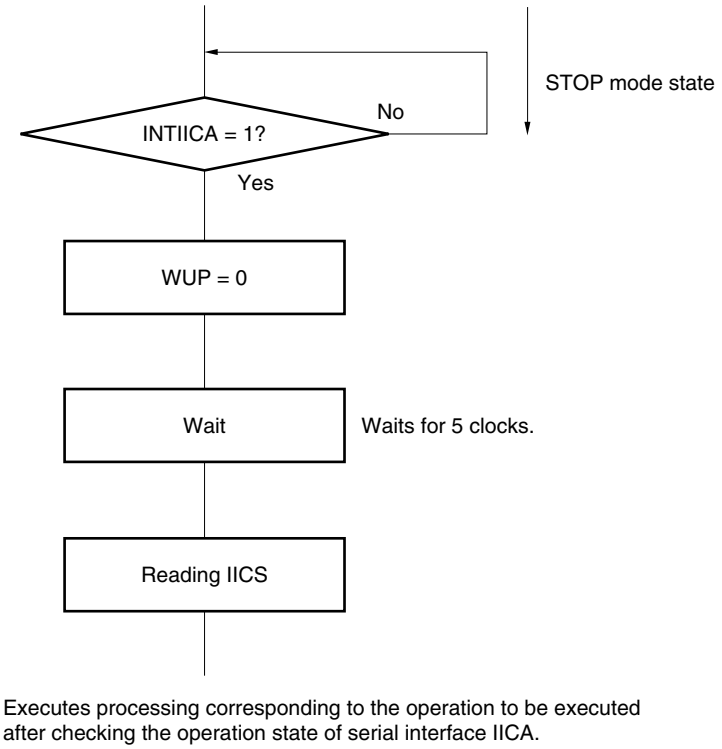

Use the following flows to perform the processing to release the STOP mode other than by an interrupt request (INTIICA) generated from serial interface IICA.

- Master device operation: Flow shown in Figure 14-24
- Slave device operation: Same as the flow in Figure 14-23

Figure 14-24. When Operating as Master Device after Releasing STOP Mode other than by INTIICA

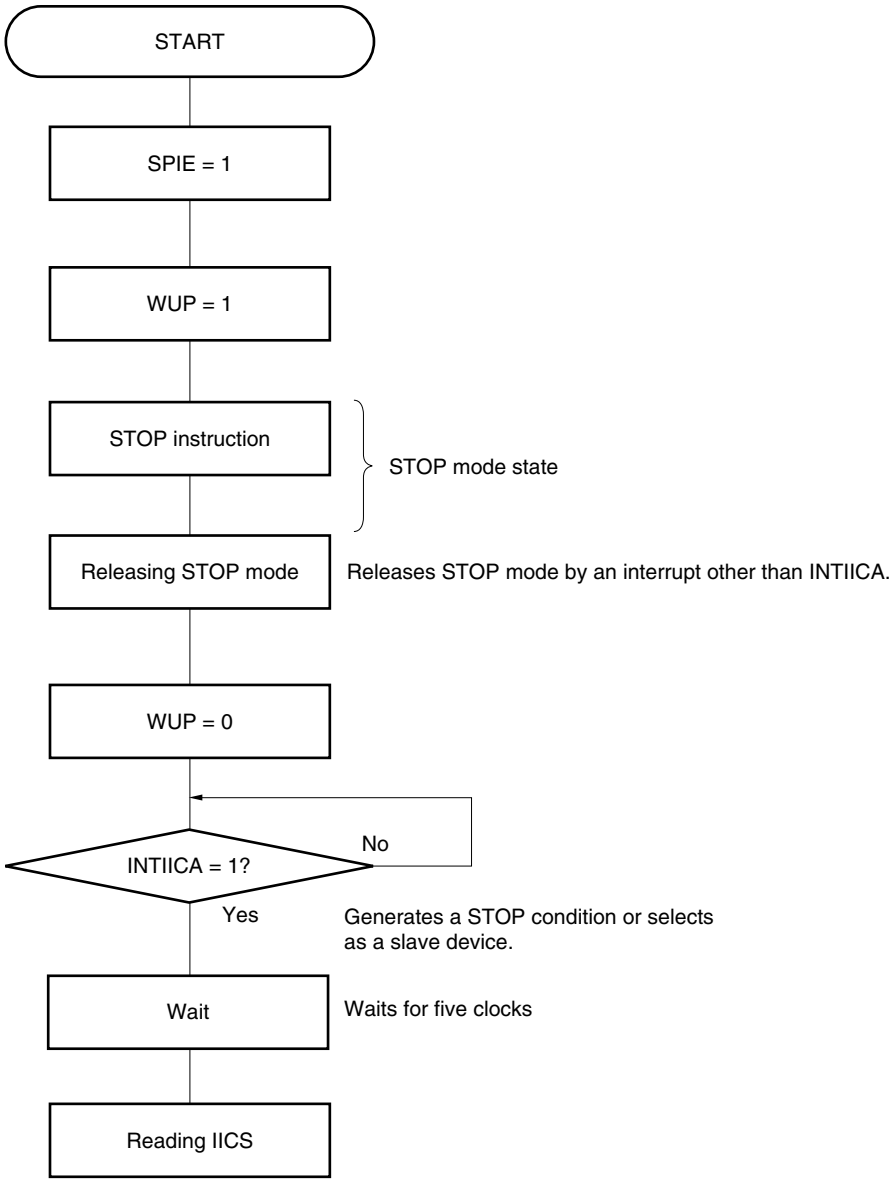

Executes processing corresponding to the operation to be executed
after checking the operation state of serial interface IICA.

14.5.14 Communication reservation

(1) When communication reservation function is enabled (bit 0 (IICRSV) of IICA flag register (IICF) = 0)

To start master device communications when not currently using a bus, a communication reservation can be made to enable transmission of a start condition when the bus is released. There are two modes under which the bus is not used.

- When arbitration results in neither master nor slave operation
- When an extension code is received and slave operation is disabled ($\overline{ACK}$ is not returned and the bus was released by setting bit 6 (LREL) of IICA control register 0 (IICCTL0) to 1 and saving communication).

If bit 1 (STT) of IICCTL0 is set to 1 while the bus is not used (after a stop condition is detected), a start condition is automatically generated and wait state is set.
If an address is written to the IICA shift register (IICA) after bit 4 (SPIE) of IICCTL0 was set to 1, and it was detected by generation of an interrupt request signal (INTIICA) that the bus was released (detection of the stop condition), then the device automatically starts communication as the master. Data written to IICA before the stop condition is detected is invalid.
When STT has been set to 1, the operation mode (as start condition or as communication reservation) is determined according to the bus status.

- If the bus has been released ..... a start condition is generated
- If the bus has not been released (standby mode)..... communication reservation

Check whether the communication reservation operates or not by using MSTS (bit 7 of the IICA status register (IICS)) after STT is set to 1 and the wait time elapses.
Use software to secure the wait time calculated by the following expression.

Wait time from setting STT = 1 to checking the MSTS flag: (IICWL setting value + IICWH setting value + 4) + $t_F \times 2 \times f_{CLK}$ [clocks]

Remark IICWL: IICA low-level width setting register
IICWH: IICA high-level width setting register
t_F: SDA0 and SCL0 signal falling times
f_{CLK}: CPU/peripheral hardware clock frequency

Figure 14-25 shows the communication reservation timing.

Figure 14-25. Communication Reservation Timing

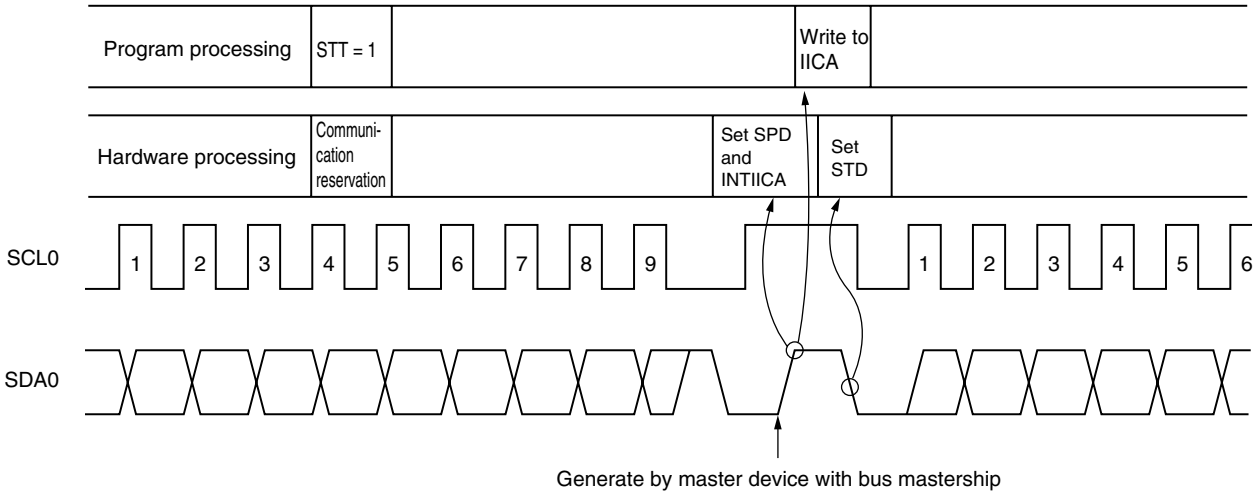

Remark IICA: IICA shift register
STT: Bit 1 of IICA control register 0 (IICCTL0)
STD: Bit 1 of IICA status register (IICS)
SPD: Bit 0 of IICA status register (IICS)

Communication reservations are accepted via the timing shown in Figure 14-26. After bit 1 (STD) of the IICA status register (IICS) is set to 1, a communication reservation can be made by setting bit 1 (STT) of IICA control register 0 (IICCTL0) to 1 before a stop condition is detected.

Figure 14-26. Timing for Accepting Communication Reservations

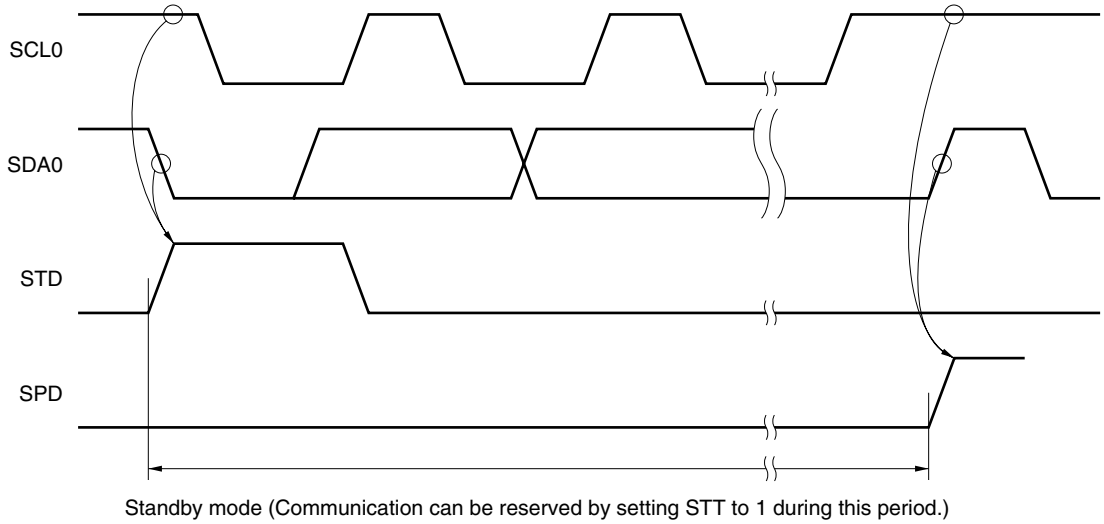

Figure 14-27 shows the communication reservation protocol.

Figure 14-27. Communication Reservation Protocol

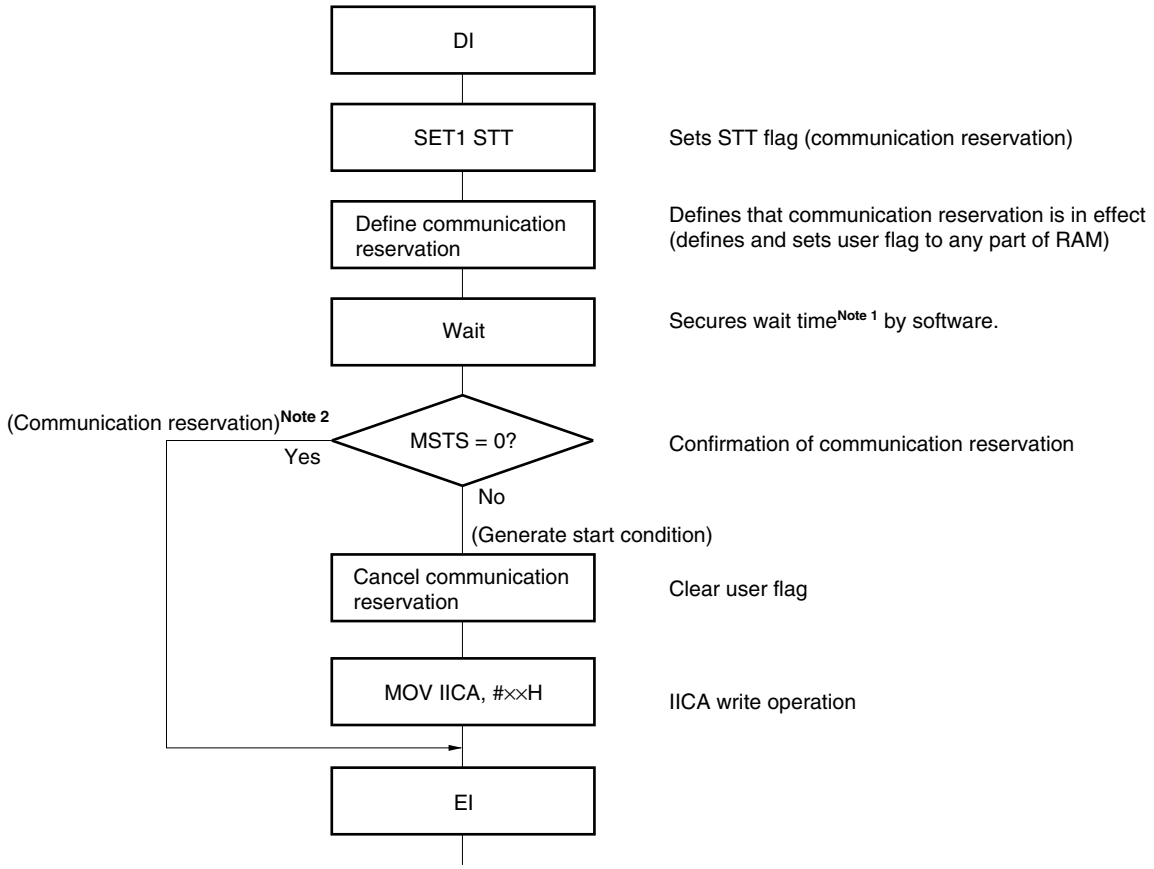

Notes 1. The wait time is calculated as follows.
(IICWL setting value + IICWH setting value + 4) + $t_F \times 2 \times f_{CLK}$ [clocks]

2. The communication reservation operation executes a write to the IICA shift register (IICA) when a stop condition interrupt request occurs.

Remark STT: Bit 1 of IICA control register 0 (IICCTL0)
MSTS: Bit 7 of IICA status register (IICS)
IICA: IICA shift register
IICWL: IICA low-level width setting register
IICWH: IICA high-level width setting register
t_F: SDA0 and SCL0 signal falling times
f_{CLK}: CPU/peripheral hardware clock frequency

(2) When communication reservation function is disabled (bit 0 (IICRSV) of IICA flag register (IICF) = 1)

When bit 1 (STT) of IICA control register 0 (IICCTL0) is set to 1 when the bus is not used in a communication during bus communication, this request is rejected and a start condition is not generated. The following two statuses are included in the status where bus is not used.

- When arbitration results in neither master nor slave operation
- When an extension code is received and slave operation is disabled ($\overline{\text{ACK}}$ is not returned and the bus was released by setting bit 6 (LREL) of IICCTL0 to 1 and saving communication)

To confirm whether the start condition was generated or request was rejected, check STCF (bit 7 of IICF). It takes up to 5 clocks until STCF is set to 1 after setting STT = 1. Therefore, secure the time by software.

14.5.15 Cautions

(1) When STCEN = 0

Immediately after I²C operation is enabled (IICBSY = 1), the bus communication status (IICBSY = 1) is recognized regardless of the actual bus status. When changing from a mode in which no stop condition has been detected to a master device communication mode, first generate a stop condition to release the bus, then perform master device communication.

When using multiple masters, it is not possible to perform master device communication when the bus has not been released (when a stop condition has not been detected).

Use the following sequence for generating a stop condition.

<1> Set IICA control register 1 (IICCTL1).
<2> Set bit 7 (IICE) of IICA control register 0 (IICCTL0) to 1.
<3> Set bit 0 (SPT) of IICCTL0 to 1.

(2) When STCEN = 1

Immediately after I²C operation is enabled (IICE= 1), the bus released status (IICBSY = 0) is recognized regardless of the actual bus status. To generate the first start condition (STT = 1), it is necessary to confirm that the bus has been released, so as to not disturb other communications.

(3) If other I²C communications are already in progress

If I²C operation is enabled and the device participates in communication already in progress when the SDA0 pin is low and the SCL0 pin is high, the macro of I²C recognizes that the SDA0 pin has gone low (detects a start condition). If the value on the bus at this time can be recognized as an extension code, $\overline{\text{ACK}}$ is returned, but this interferes with other I²C communications. To avoid this, start I²C in the following sequence.

<1> Clear bit 4 (SPIE) of IICCTL0 to 0 to disable generation of an interrupt request signal (INTIICA) when the stop condition is detected.
<2> Set bit 7 (IICE) of IICCTL0 to 1 to enable the operation of I²C.
<3> Wait for detection of the start condition.
<4> Set bit 6 (LREL) of IICCTL0 to 1 before $\overline{\text{ACK}}$ is returned (4 to 80 clocks after setting IICE to 1), to forcibly disable detection.

(4) Setting STT and SPT (bits 1 and 0 of IICCTL0) again after they are set and before they are cleared to 0 is prohibited.

(5) When transmission is reserved, set SPIE (bit 4 of IICCTL0) to 1 so that an interrupt request is generated when the stop condition is detected. Transfer is started when communication data is written to IICA after the interrupt request is generated. Unless the interrupt is generated when the stop condition is detected, the device stops in the wait state because the interrupt request is not generated when communication is started. However, it is not necessary to set SPIE to 1 when MSTS (bit 7 of IICS) is detected by software.

14.5.16 Communication operations

The following shows three operation procedures with the flowchart.

(1) Master operation in single master system

The flowchart when using the 78K0R/IE3 as the master in a single master system is shown below.

This flowchart is broadly divided into the initial settings and communication processing. Execute the initial settings at startup. If communication with the slave is required, prepare the communication and then execute communication processing.

(2) Master operation in multimaster system

In the I^2C bus multimaster system, whether the bus is released or used cannot be judged by the I^2C bus specifications when the bus takes part in a communication. Here, when data and clock are at a high level for a certain period (1 frame), the 78K0R/IE3 takes part in a communication with bus released state.

This flowchart is broadly divided into the initial settings, communication waiting, and communication processing. The processing when the 78K0R/IE3 looses in arbitration and is specified as the slave is omitted here, and only the processing as the master is shown. Execute the initial settings at startup to take part in a communication. Then, wait for the communication request as the master or wait for the specification as the slave. The actual communication is performed in the communication processing, and it supports the transmission/reception with the slave and the arbitration with other masters.

(3) Slave operation

An example of when the 78K0R/IE3 is used as the I^2C bus slave is shown below.

When used as the slave, operation is started by an interrupt. Execute the initial settings at startup, then wait for the INTIICA interrupt occurrence (communication waiting). When an INTIICA interrupt occurs, the communication status is judged and its result is passed as a flag over to the main processing.

By checking the flags, necessary communication processing is performed.

(1) Master operation in single-master system

Figure 14-28. Master Operation in Single-Master System

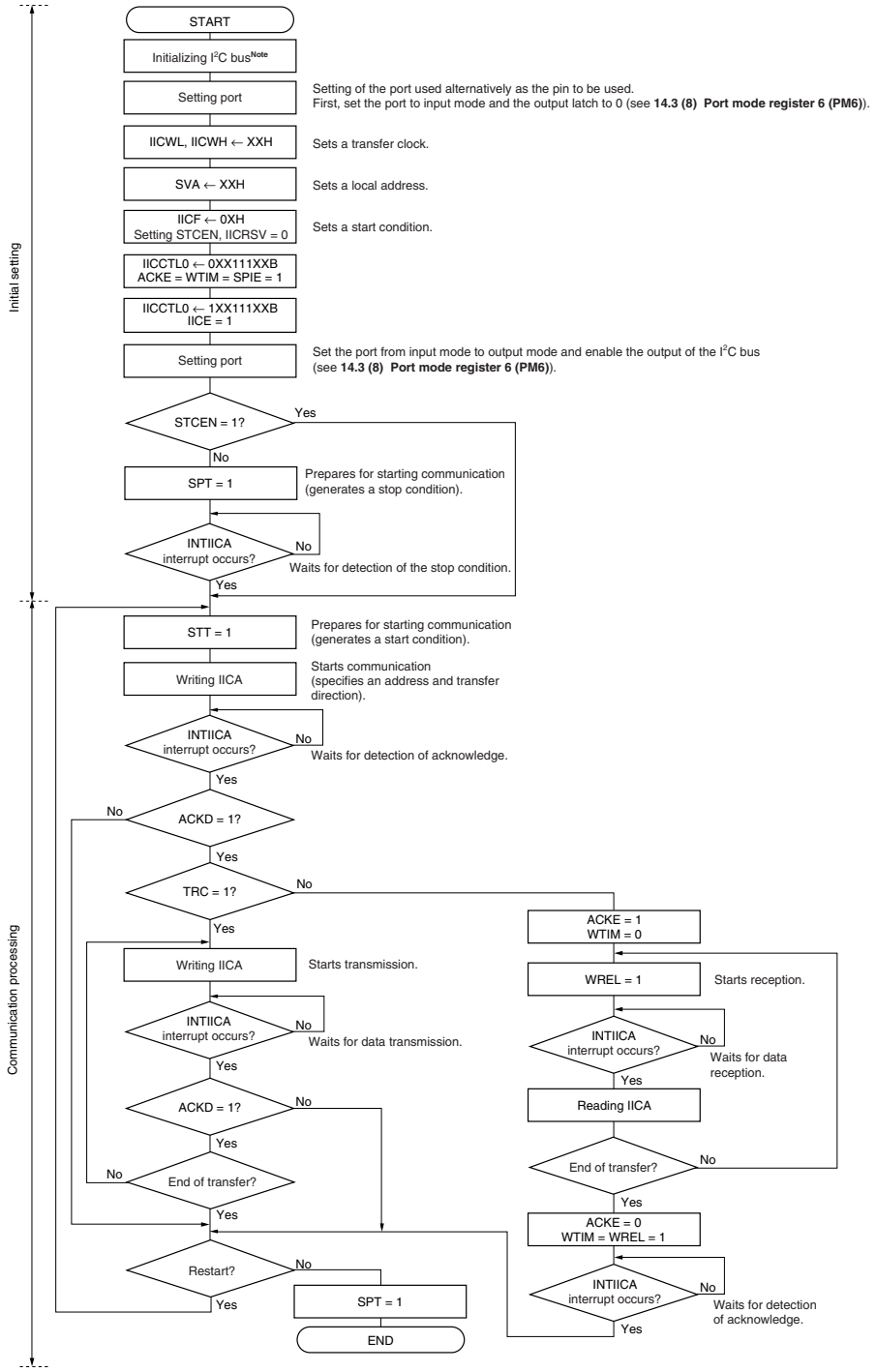

Note Release (SCL0 and SDA0 pins = high level) the I²C bus in conformance with the specifications of the product that is communicating. If EEPROM is outputting a low level to the SDA0 pin, for example, set the SCL0 pin in the output port mode, and output a clock pulse from the output port until the SDA0 pin is constantly at high level.

Remark Conform to the specifications of the product that is communicating, with respect to the transmission and reception formats.

(2) Master operation in multi-master system

Figure 14-29. Master Operation in Multi-Master System (1/3)

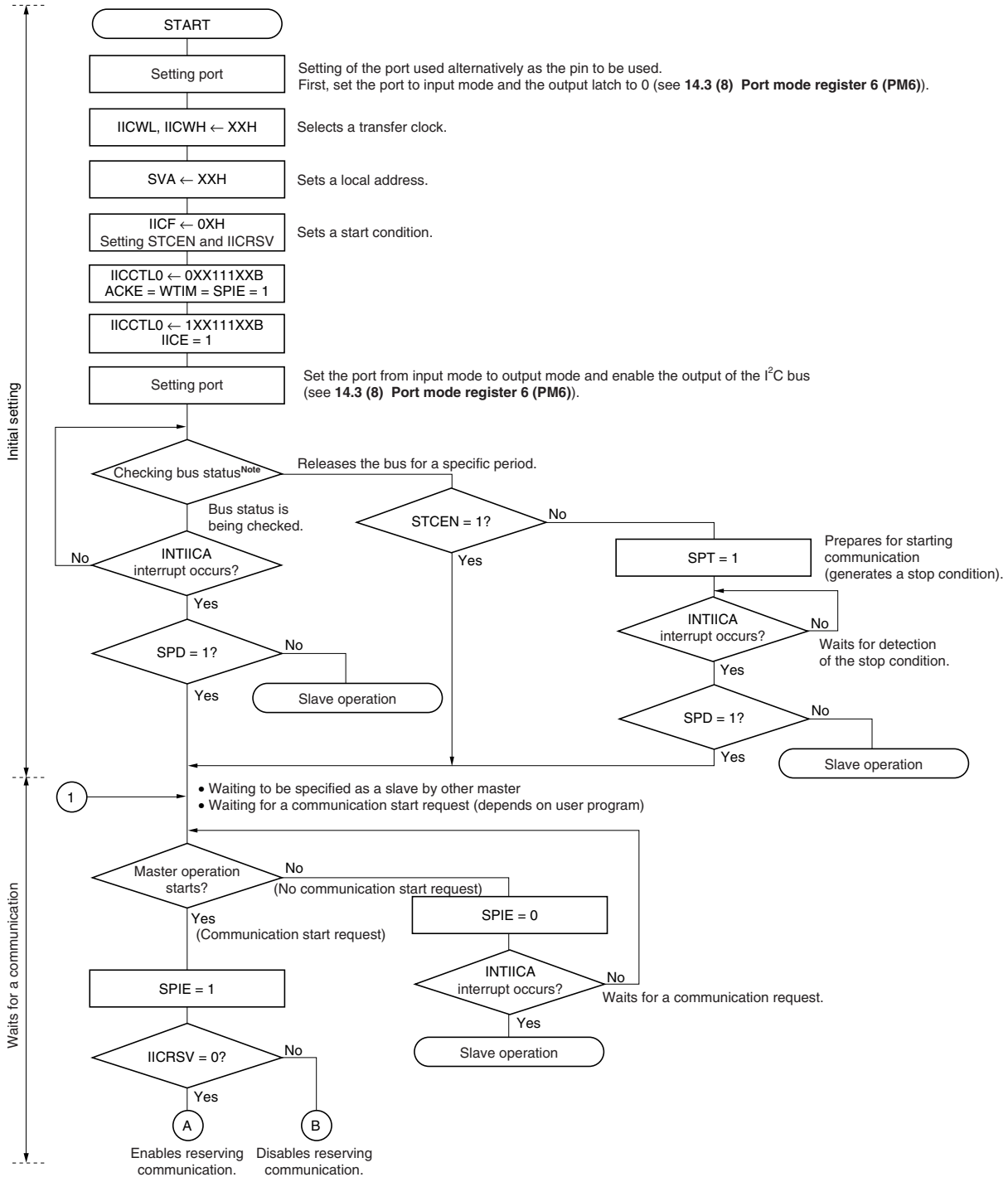

Note Confirm that the bus is released (CLD bit = 1, DAD bit = 1) for a specific period (for example, for a period of one frame). If the SDA0 pin is constantly at low level, decide whether to release the I^{2}C bus (SCL0 and SDA0 pins = high level) in conformance with the specifications of the product that is communicating.

Figure 14-29. Master Operation in Multi-Master System (2/3)

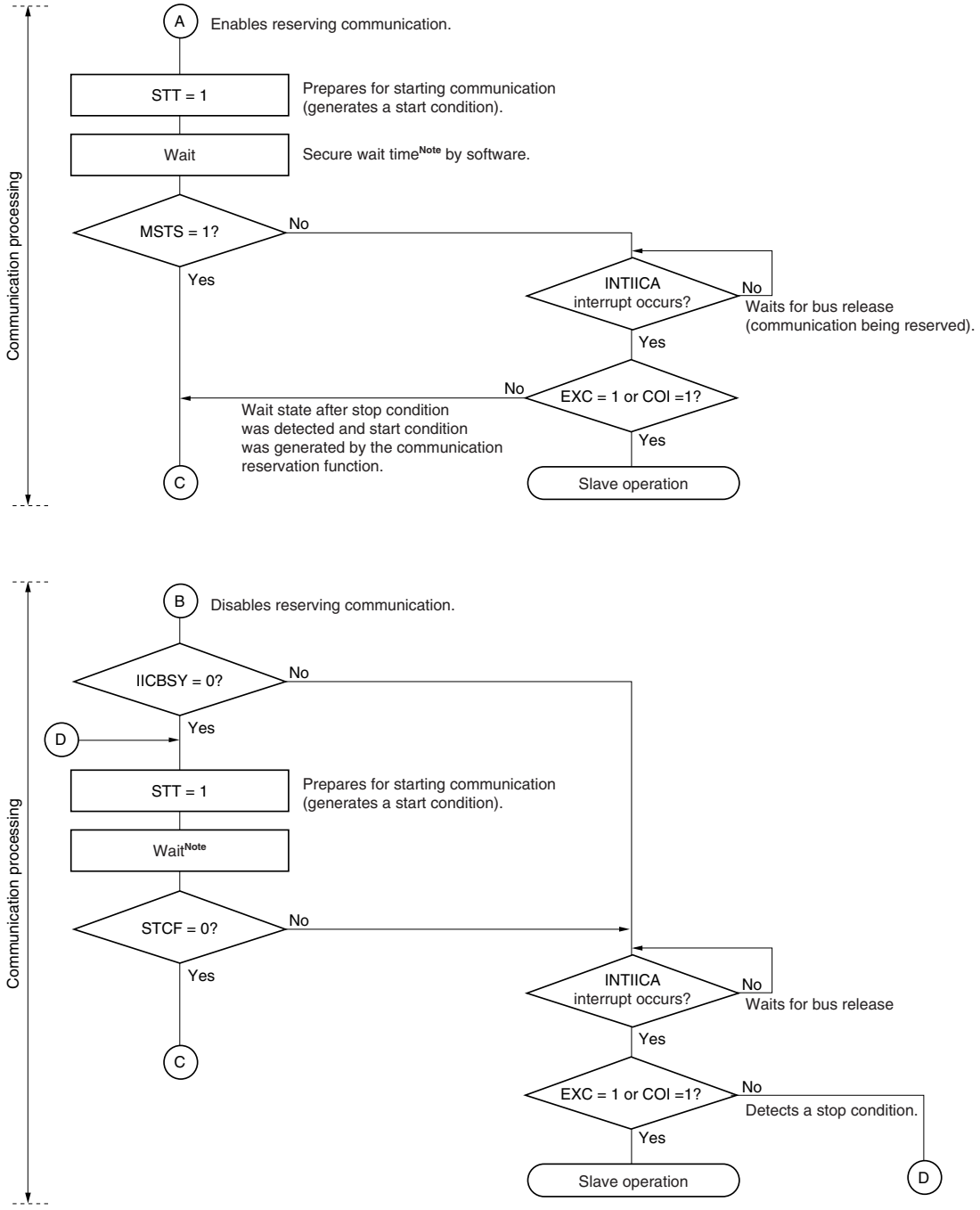

Note The wait time is calculated as follows.

(IICWL setting value + IICWH setting value + 4) + $t_F \times 2 \times f_{CLK}$ [clocks]

Remark IICWL: IICA low-level width setting register

IICWH: IICA high-level width setting register

t_F: SDA0 and SCL0 signal falling times (see **CHAPTER 28 ELECTRICAL SPECIFICATIONS**)

f_{CLK}: CPU/peripheral hardware clock frequency

Figure 14-29. Master Operation in Multi-Master System (3/3)

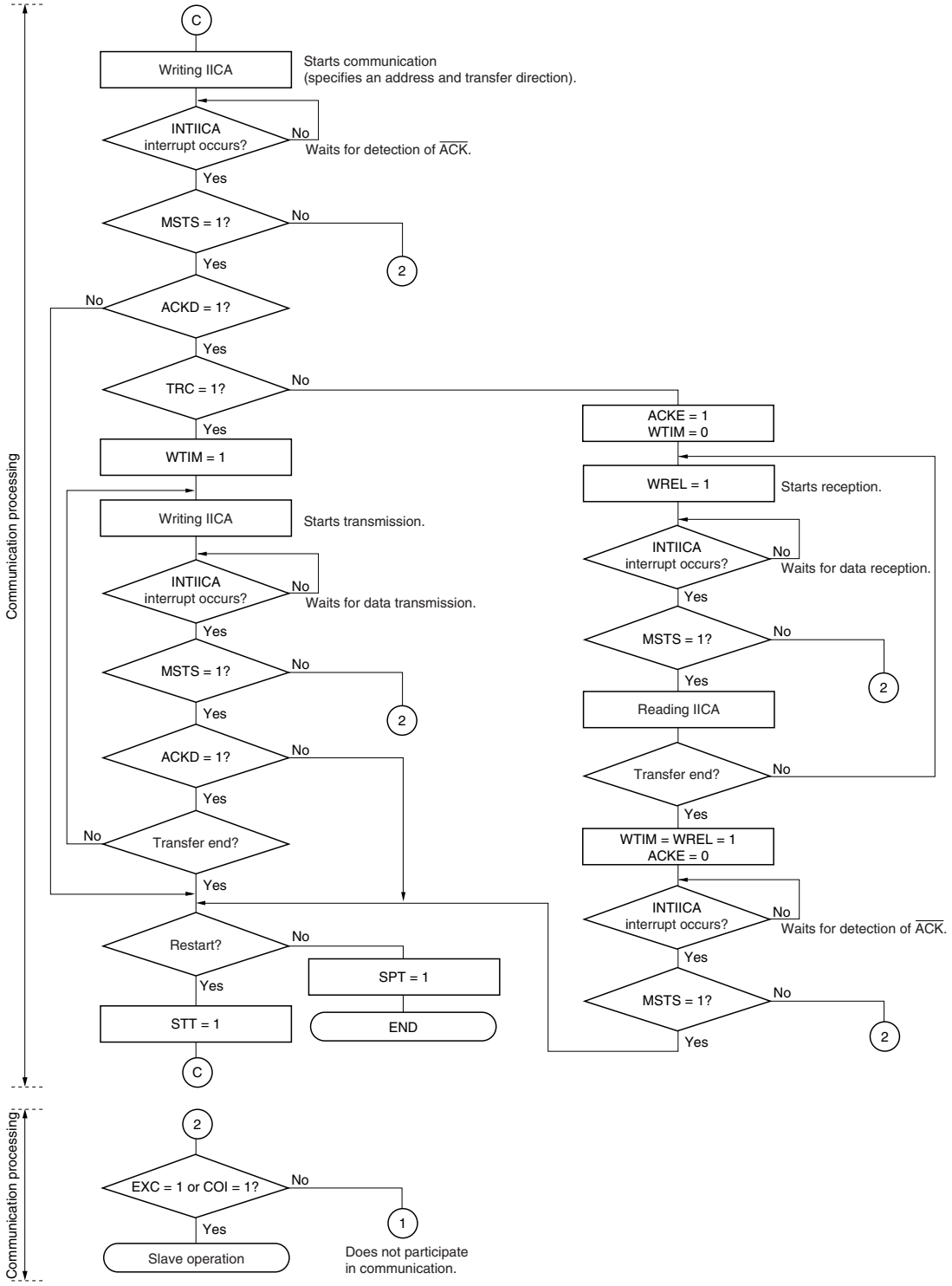

Remarks 1. Conform to the specifications of the product that is communicating, with respect to the transmission and reception formats.

2. To use the device as a master in a multi-master system, read the MSTS bit each time interrupt INTIICA has occurred to check the arbitration result.

3. To use the device as a slave in a multi-master system, check the status by using the IICS and IICF registers each time interrupt INTIICA has occurred, and determine the processing to be performed next.

(3) Slave operation

The processing procedure of the slave operation is as follows.

Basically, the slave operation is event-driven. Therefore, processing by the INTIICA interrupt (processing that must substantially change the operation status such as detection of a stop condition during communication) is necessary.

In the following explanation, it is assumed that the extension code is not supported for data communication. It is also assumed that the INTIICA interrupt servicing only performs status transition processing, and that actual data communication is performed by the main processing.

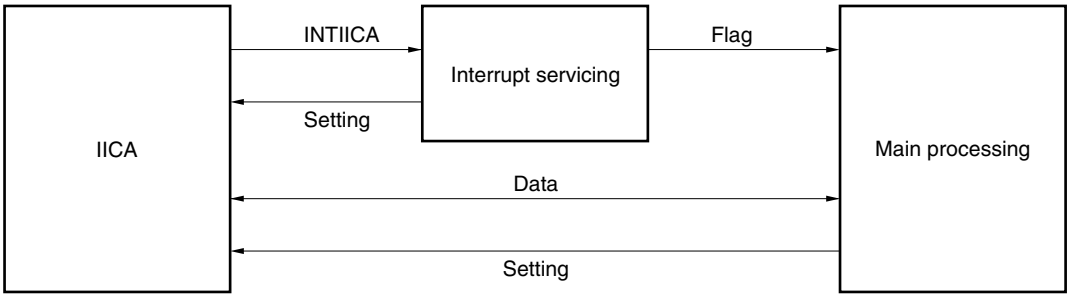

Therefore, data communication processing is performed by preparing the following three flags and passing them to the main processing instead of INTIICA.

<1> Communication mode flag

This flag indicates the following two communication statuses.

- Clear mode: Status in which data communication is not performed
- Communication mode: Status in which data communication is performed (from valid address detection to stop condition detection, no detection of $\overline{\text{ACK}}$ from master, address mismatch)

<2> Ready flag

This flag indicates that data communication is enabled. Its function is the same as the INTIICA interrupt for ordinary data communication. This flag is set by interrupt servicing and cleared by the main processing. Clear this flag by interrupt servicing when communication is started. However, the ready flag is not set by interrupt servicing when the first data is transmitted. Therefore, the first data is transmitted without the flag being cleared (an address match is interpreted as a request for the next data).

<3> Communication direction flag

This flag indicates the direction of communication. Its value is the same as TRC.

The main processing of the slave operation is explained next.

Start serial interface IICA and wait until communication is enabled. When communication is enabled, execute communication by using the communication mode flag and ready flag (processing of the stop condition and start condition is performed by an interrupt. Here, check the status by using the flags).

The transmission operation is repeated until the master no longer returns $\overline{\text{ACK}}$. If $\overline{\text{ACK}}$ is not returned from the master, communication is completed.

For reception, the necessary amount of data is received. When communication is completed, $\overline{\text{ACK}}$ is not returned as the next data. After that, the master generates a stop condition or restart condition. Exit from the communication status occurs in this way.

Figure 14-30. Slave Operation Flowchart (1)

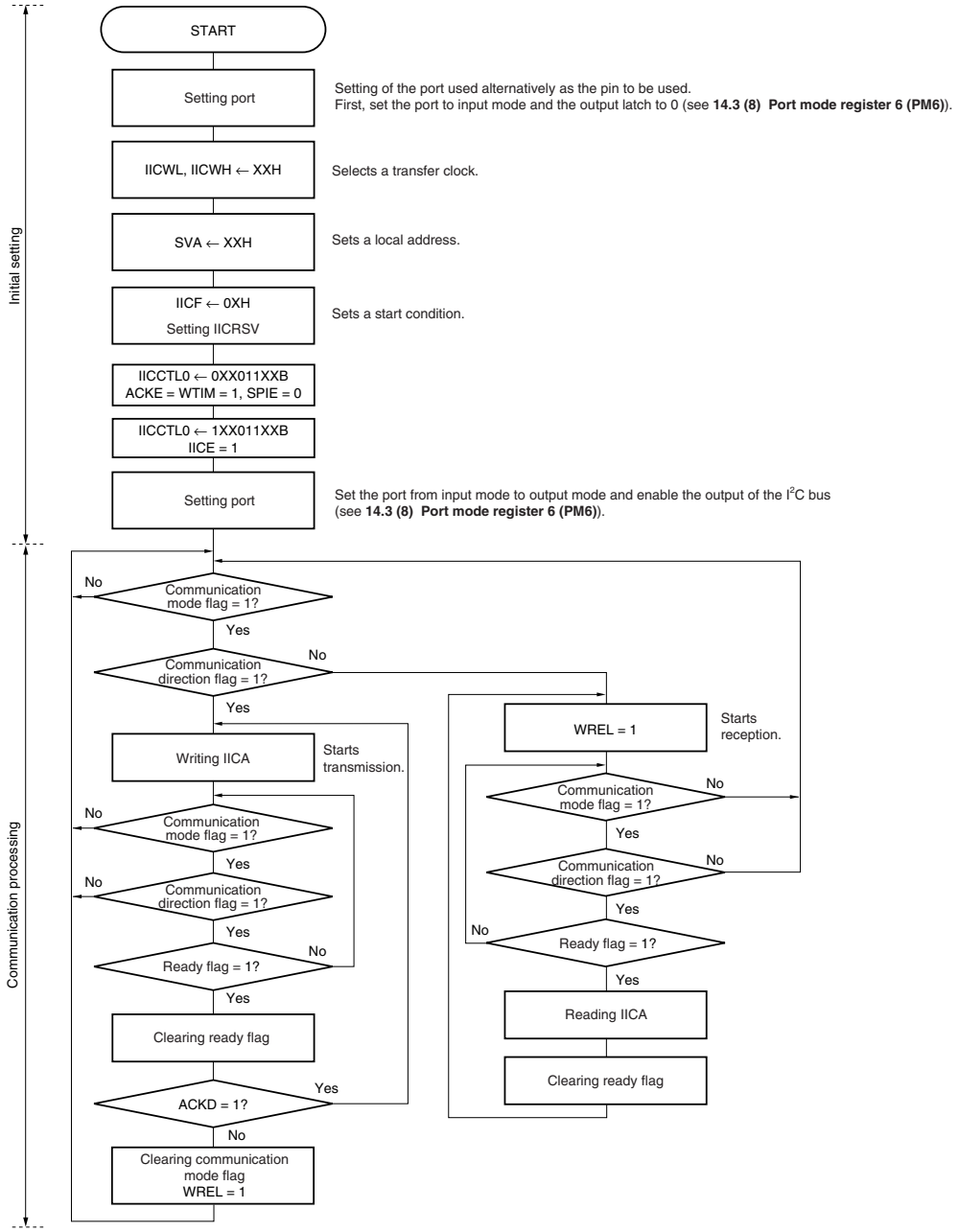

Remark Conform to the specifications of the product that is in communication, regarding the transmission and reception formats.

An example of the processing procedure of the slave with the INTIICA interrupt is explained below (processing is performed assuming that no extension code is used). The INTIICA interrupt checks the status, and the following operations are performed.

<1> Communication is stopped if the stop condition is issued.

<2> If the start condition is issued, the address is checked and communication is completed if the address does not match. If the address matches, the communication mode is set, wait is cancelled, and processing returns from the interrupt (the ready flag is cleared).

<3> For data transmit/receive, only the ready flag is set. Processing returns from the interrupt with the I^2C bus remaining in the wait state.

Remark <1> to <3> above correspond to <1> to <3> in Figure 14-31 Slave Operation Flowchart (2).

Figure 14-31. Slave Operation Flowchart (2)

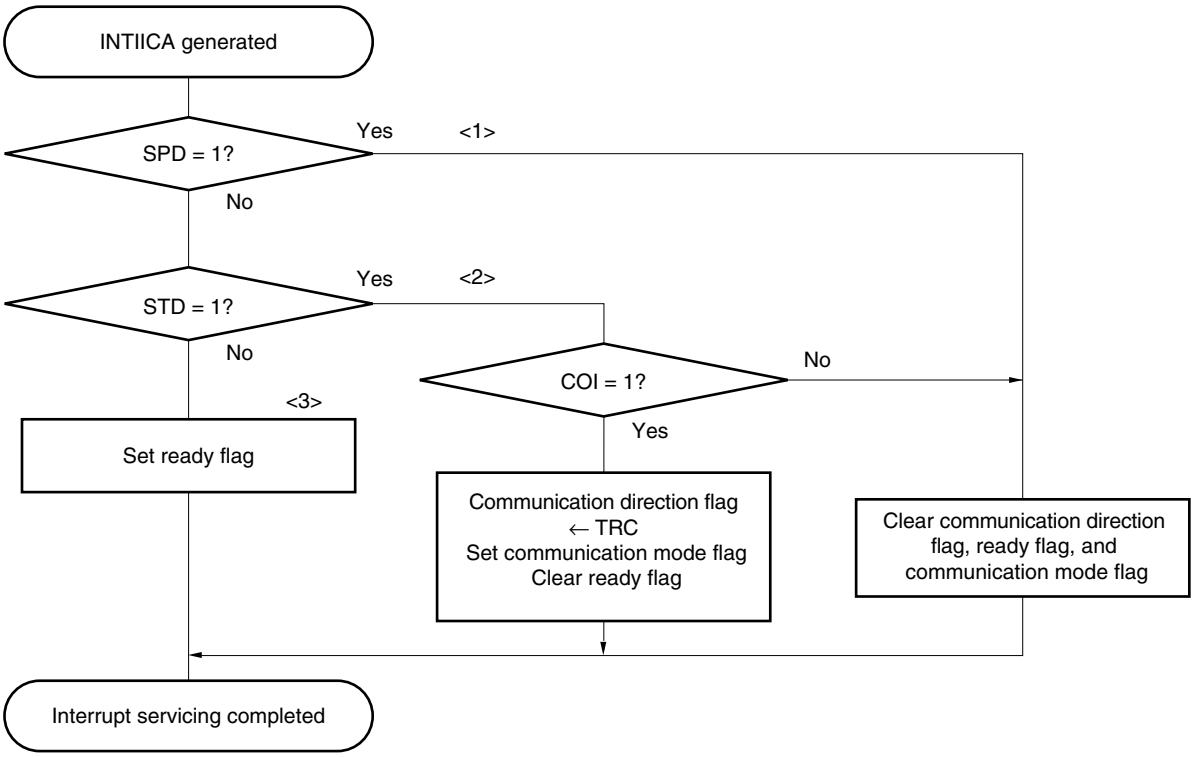

14.5.17 Timing of I²C interrupt request (INTIICA) occurrence

The timing of transmitting or receiving data and generation of interrupt request signal INTIICA, and the value of the IICS register when the INTIICA signal is generated are shown below.

Remark

ST:	Start condition
AD6 to AD0:	Address
R/$\overline{W}$:	Transfer direction specification
$\overline{ACK}$:	Acknowledge
D7 to D0:	Data
SP:	Stop condition

(1) Master device operation

(a) Start ~ Address ~ Data ~ Data ~ Stop (transmission/reception)

(i) When WTIM = 0

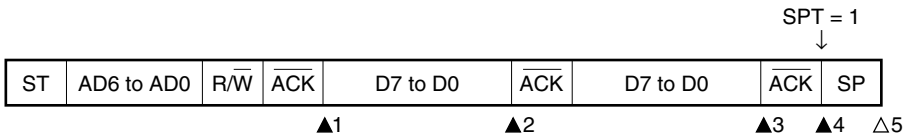

▲1: IICS = 1000×110B
▲2: IICS = 1000×000B
▲3: IICS = 1000×000B (Sets WTIM to 1)[Note]
▲4: IICS = 1000××00B (Sets SPT to 1)[Note]
△5: IICS = 00000001B

Note To generate a stop condition, set WTIM to 1 and change the timing for generating the INTIICA interrupt request signal.

Remark ▲: Always generated
△: Generated only when SPIE = 1
×: Don't care

(ii) When WTIM = 1

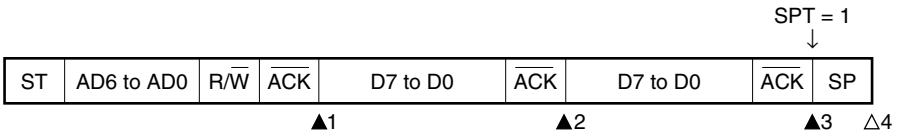

▲1: IICS = 1000×110B
▲2: IICS = 1000×100B
▲3: IICS = 1000××00B (Sets SPT to 1)
△4: IICS = 00000001B

Remark ▲: Always generated
△: Generated only when SPIE = 1
×: Don't care

(b) Start ~ Address ~ Data ~ Start ~ Address ~ Data ~ Stop (restart)

(i) When WTIM = 0

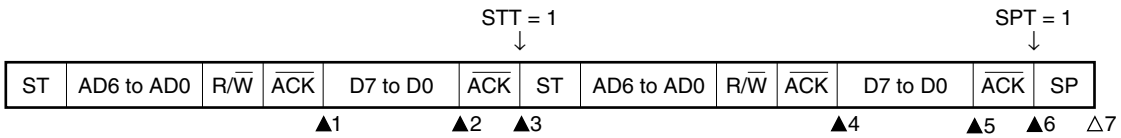

▲1: IICS = 1000×110B
▲2: IICS = 1000×000B (Sets WTIM to 1)[Note 1]
▲3: IICS = 1000××00B (Clears WTIM to 0[Note 2], sets STT to 1)
▲4: IICS = 1000×110B
▲5: IICS = 1000×000B (Sets WTIM to 1)[Note 3]
▲6: IICS = 1000××00B (Sets SPT to 1)
△7: IICS = 00000001B

Notes 1. To generate a start condition, set WTIM to 1 and change the timing for generating the INTIICA interrupt request signal.
2. Clear WTIM to 0 to restore the original setting.
3. To generate a stop condition, set WTIM to 1 and change the timing for generating the INTIICA interrupt request signal.

Remark ▲: Always generated
△: Generated only when SPIE = 1
×: Don't care

(ii) When WTIM = 1

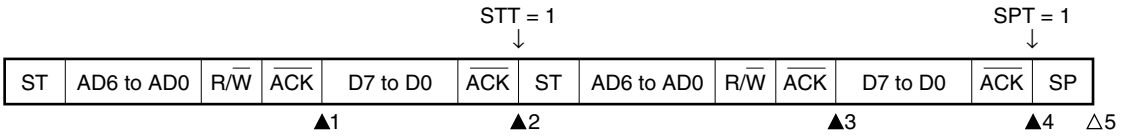

▲1: IICS = 1000×110B
▲2: IICS = 1000××00B (Sets STT to 1)
▲3: IICS = 1000×110B
▲4: IICS = 1000××00B (Sets SPT to 1)
△5: IICS = 00000001B

Remark ▲: Always generated
△: Generated only when SPIE = 1
×: Don't care

(c) Start ~ Code ~ Data ~ Data ~ Stop (extension code transmission)

(i) When WTIM = 0

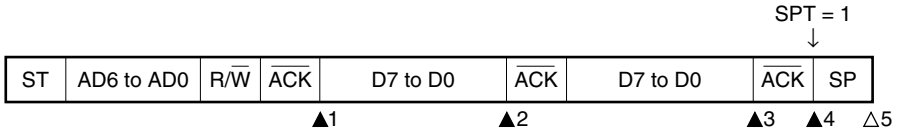

▲1: IICS = 1010×110B
▲2: IICS = 1010×000B
▲3: IICS = 1010×000B (Sets WTIM to 1)[Note]
▲4: IICS = 1010××00B (Sets SPT to 1)
△5: IICS = 00000001B

Note To generate a stop condition, set WTIM to 1 and change the timing for generating the INTIICA interrupt request signal.

Remark ▲: Always generated
△: Generated only when SPIE = 1
×: Don't care

(ii) When WTIM = 1

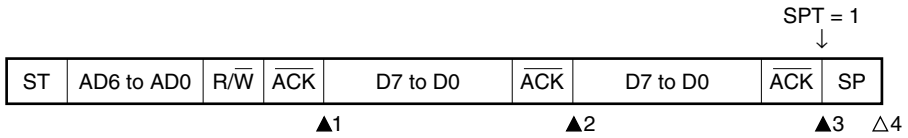

▲1: IICS = 1010×110B
▲2: IICS = 1010×100B
▲3: IICS = 1010××00B (Sets SPT to 1)
△4: IICS = 00001001B

Remark ▲: Always generated
△: Generated only when SPIE = 1
×: Don't care

(2) Slave device operation (slave address data reception)

(a) Start ~ Address ~ Data ~ Data ~ Stop

(i) When WTIM = 0

ST	AD6 to AD0	R/$\overline{W}$	$\overline{ACK}$	D7 to D0	$\overline{ACK}$	D7 to D0	$\overline{ACK}$	SP

▲1 ▲2 ▲3 △4

▲1: IICS = 0001×110B
▲2: IICS = 0001×000B
▲3: IICS = 0001×000B
△4: IICS = 00000001B

Remark ▲: Always generated
△: Generated only when SPIE = 1
×: Don't care

(ii) When WTIM = 1

ST	AD6 to AD0	R/$\overline{W}$	$\overline{ACK}$	D7 to D0	$\overline{ACK}$	D7 to D0	$\overline{ACK}$	SP

▲1 ▲2 ▲3 △4

▲1: IICS = 0001×110B
▲2: IICS = 0001×100B
▲3: IICS = 0001××00B
△4: IICS = 00000001B

Remark ▲: Always generated
△: Generated only when SPIE = 1
×: Don't care

(b) Start ~ Address ~ Data ~ Start ~ Address ~ Data ~ Stop

(i) When WTIM = 0 (after restart, matches with SVA)

ST	AD6 to AD0	R/$\overline{W}$	$\overline{ACK}$	D7 to D0	$\overline{ACK}$	ST	AD6 to AD0	R/$\overline{W}$	$\overline{ACK}$	D7 to D0	$\overline{ACK}$	SP
				▲1	▲2					▲3	▲4	△5

▲1: IICS = 0001×110B
▲2: IICS = 0001×000B
▲3: IICS = 0001×110B
▲4: IICS = 0001×000B
△5: IICS = 00000001B

Remark ▲: Always generated
△: Generated only when SPIE = 1
×: Don't care

(ii) When WTIM = 1 (after restart, matches with SVA)

ST	AD6 to AD0	R/$\overline{W}$	$\overline{ACK}$	D7 to D0	$\overline{ACK}$	ST	AD6 to AD0	R/$\overline{W}$	$\overline{ACK}$	D7 to D0	$\overline{ACK}$	SP
				▲1		▲2				▲3	▲4	△5

▲1: IICS = 0001×110B
▲2: IICS = 0001××00B
▲3: IICS = 0001×110B
▲4: IICS = 0001××00B
△5: IICS = 00000001B

Remark ▲: Always generated
△: Generated only when SPIE = 1
×: Don't care

(c) Start ~ Address ~ Data ~ Start ~ Code ~ Data ~ Stop

(i) When WTIM = 0 (after restart, does not match address (= extension code))

ST	AD6 to AD0	R/$\overline{W}$	$\overline{ACK}$	D7 to D0	$\overline{ACK}$	ST	AD6 to AD0	R/$\overline{W}$	$\overline{ACK}$	D7 to D0	$\overline{ACK}$	SP
			▲1		▲2				▲3		▲4	△5

▲1: IICS = 0001×110B
▲2: IICS = 0001×000B
▲3: IICS = 0010×010B
▲4: IICS = 0010×000B
△5: IICS = 00000001B

Remark ▲: Always generated
△: Generated only when SPIE = 1
×: Don't care

(ii) When WTIM = 1 (after restart, does not match address (= extension code))

ST	AD6 to AD0	R/$\overline{W}$	$\overline{ACK}$	D7 to D0	$\overline{ACK}$	ST	AD6 to AD0	R/$\overline{W}$	$\overline{ACK}$	D7 to D0	$\overline{ACK}$	SP
			▲1			▲2			▲3	▲4	▲5	△6

▲1: IICS = 0001×110B
▲2: IICS = 0001××00B
▲3: IICS = 0010×010B
▲4: IICS = 0010×110B
▲5: IICS = 0010××00B
△6: IICS = 00000001B

Remark ▲: Always generated
△: Generated only when SPIE = 1
×: Don't care

(d) Start ~ Address ~ Data ~ Start ~ Address ~ Data ~ Stop

(i) When WTIM = 0 (after restart, does not match address (= not extension code))

ST	AD6 to AD0	R/$\overline{W}$	$\overline{ACK}$	D7 to D0	$\overline{ACK}$	ST	AD6 to AD0	R/$\overline{W}$	$\overline{ACK}$	D7 to D0	$\overline{ACK}$	SP
			▲1		▲2					▲3		△4

▲1: IICS = 0001×110B
▲2: IICS = 0001×000B
▲3: IICS = 00000110B
△4: IICS = 00000001B

Remark ▲: Always generated
△: Generated only when SPIE = 1
×: Don't care

(ii) When WTIM = 1 (after restart, does not match address (= not extension code))

ST	AD6 to AD0	R/$\overline{W}$	$\overline{ACK}$	D7 to D0	$\overline{ACK}$	ST	AD6 to AD0	R/$\overline{W}$	$\overline{ACK}$	D7 to D0	$\overline{ACK}$	SP
			▲1			▲2				▲3		△4

▲1: IICS = 0001×110B
▲2: IICS = 0001××00B
▲3: IICS = 00000110B
△4: IICS = 00000001B

Remark ▲: Always generated
△: Generated only when SPIE = 1
×: Don't care

(3) Slave device operation (when receiving extension code)

The device is always participating in communication when it receives an extension code.

(a) Start ~ Code ~ Data ~ Data ~ Stop

(i) When WTIM = 0

ST	AD6 to AD0	R/$\overline{W}$	$\overline{ACK}$	D7 to D0	$\overline{ACK}$	D7 to D0	$\overline{ACK}$	SP

▲1 ▲2 ▲3 △4

▲1: IICS = 0010×010B
▲2: IICS = 0010×000B
▲3: IICS = 0010×000B
△4: IICS = 00000001B

Remark ▲: Always generated
△: Generated only when SPIE = 1
×: Don't care

(ii) When WTIM = 1

ST	AD6 to AD0	R/$\overline{W}$	$\overline{ACK}$	D7 to D0	$\overline{ACK}$	D7 to D0	$\overline{ACK}$	SP

▲1 ▲2 ▲3 ▲4 △5

▲1: IICS = 0010×010B
▲2: IICS = 0010×110B
▲3: IICS = 0010×100B
▲4: IICS = 0010××00B
△5: IICS = 00000001B

Remark ▲: Always generated
△: Generated only when SPIE = 1
×: Don't care

(b) Start ~ Code ~ Data ~ Start ~ Address ~ Data ~ Stop

(i) When WTIM = 0 (after restart, matches SVA)

ST	AD6 to AD0	R/$\overline{W}$	$\overline{ACK}$	D7 to D0	$\overline{ACK}$	ST	AD6 to AD0	R/$\overline{W}$	$\overline{ACK}$	D7 to D0	$\overline{ACK}$	SP
			▲1		▲2					▲3	▲4	△5

▲1: IICS = 0010×010B
▲2: IICS = 0010×000B
▲3: IICS = 0001×110B
▲4: IICS = 0001×000B
△5: IICS = 00000001B

Remark ▲: Always generated
△: Generated only when SPIE = 1
×: Don't care

(ii) When WTIM = 1 (after restart, matches SVA)

ST	AD6 to AD0	R/$\overline{W}$	$\overline{ACK}$	D7 to D0	$\overline{ACK}$	ST	AD6 to AD0	R/$\overline{W}$	$\overline{ACK}$	D7 to D0	$\overline{ACK}$	SP
			▲1	▲2		▲3				▲4	▲5	△6

▲1: IICS = 0010×010B
▲2: IICS = 0010×110B
▲3: IICS = 0010××00B
▲4: IICS = 0001×110B
▲5: IICS = 0001××00B
△6: IICS = 00000001B

Remark ▲: Always generated
△: Generated only when SPIE = 1
×: Don't care

(c) Start ~ Code ~ Data ~ Start ~ Code ~ Data ~ Stop

(i) When WTIM = 0 (after restart, extension code reception)

ST	AD6 to AD0	R/$\overline{W}$	$\overline{ACK}$	D7 to D0	$\overline{ACK}$	ST	AD6 to AD0	R/$\overline{W}$	$\overline{ACK}$	D7 to D0	$\overline{ACK}$	SP
			▲1		▲2				▲3		▲4	△5

▲1: IICS = 0010×010B
▲2: IICS = 0010×000B
▲3: IICS = 0010×010B
▲4: IICS = 0010×000B
△5: IICS = 00000001B

Remark ▲: Always generated
△: Generated only when SPIE = 1
×: Don't care

(ii) When WTIM = 1 (after restart, extension code reception)

ST	AD6 to AD0	R/$\overline{W}$	$\overline{ACK}$	D7 to D0	$\overline{ACK}$	ST	AD6 to AD0	R/$\overline{W}$	$\overline{ACK}$	D7 to D0	$\overline{ACK}$	SP
			▲1	▲2		▲3			▲4	▲5	▲6	△7

▲1: IICS = 0010×010B
▲2: IICS = 0010×110B
▲3: IICS = 0010××00B
▲4: IICS = 0010×010B
▲5: IICS = 0010×110B
▲6: IICS = 0010××00B
△7: IICS = 00000001B

Remark ▲: Always generated
△: Generated only when SPIE = 1
×: Don't care

(d) Start ~ Code ~ Data ~ Start ~ Address ~ Data ~ Stop

(i) When WTIM = 0 (after restart, does not match address (= not extension code))

ST	AD6 to AD0	R/$\overline{W}$	$\overline{ACK}$	D7 to D0	$\overline{ACK}$	ST	AD6 to AD0	R/$\overline{W}$	$\overline{ACK}$	D7 to D0	$\overline{ACK}$	SP
			▲1		▲2					▲3		△4

▲1: IICS = 00100010B
▲2: IICS = 00100000B
▲3: IICS = 00000110B
△4: IICS = 00000001B

Remark ▲: Always generated
△: Generated only when SPIE = 1
×: Don't care

(ii) When WTIM = 1 (after restart, does not match address (= not extension code))

ST	AD6 to AD0	R/$\overline{W}$	$\overline{ACK}$	D7 to D0	$\overline{ACK}$	ST	AD6 to AD0	R/$\overline{W}$	$\overline{ACK}$	D7 to D0	$\overline{ACK}$	SP
			▲1	▲2		▲3				▲4		△5

▲1: IICS = 00100010B
▲2: IICS = 00100110B
▲3: IICS = 00100×00B
▲4: IICS = 00000110B
△5: IICS = 00000001B

Remark ▲: Always generated
△: Generated only when SPIE = 1
×: Don't care

(4) Operation without communication

(a) Start ~ Code ~ Data ~ Data ~ Stop

ST	AD6 to AD0	R/$\overline{W}$	$\overline{ACK}$	D7 to D0	$\overline{ACK}$	D7 to D0	$\overline{ACK}$	SP
								△1

△1: IICS = 00000001B

Remark △: Generated only when SPIE = 1

(5) Arbitration loss operation (operation as slave after arbitration loss)

When the device is used as a master in a multi-master system, read the MSTS bit each time interrupt request signal INTIICA has occurred to check the arbitration result.

(a) When arbitration loss occurs during transmission of slave address data

(i) When WTIM = 0

ST	AD6 to AD0	R/$\overline{W}$	$\overline{ACK}$	D7 to D0	$\overline{ACK}$	D7 to D0	$\overline{ACK}$	SP
				▲1	▲2		▲3	△4

▲1: IICS = 0101×110B
▲2: IICS = 0001×000B
▲3: IICS = 0001×000B
△4: IICS = 00000001B

Remark ▲: Always generated
△: Generated only when SPIE = 1
×: Don't care

(ii) When WTIM = 1

ST	AD6 to AD0	R/$\overline{W}$	$\overline{ACK}$	D7 to D0	$\overline{ACK}$	D7 to D0	$\overline{ACK}$	SP
			▲1		▲2		▲3	△4

▲1: IICS = 0101×110B
▲2: IICS = 0001×100B
▲3: IICS = 0001××00B
△4: IICS = 00000001B

Remark ▲: Always generated
△: Generated only when SPIE = 1
×: Don't care

(b) When arbitration loss occurs during transmission of extension code

(i) When WTIM = 0

ST	AD6 to AD0	R/$\overline{W}$	$\overline{ACK}$	D7 to D0	$\overline{ACK}$	D7 to D0	$\overline{ACK}$	SP
			▲1		▲2		▲3	△4

▲1: IICS = 0110×010B
▲2: IICS = 0010×000B
▲3: IICS = 0010×000B
△4: IICS = 00000001B

Remark ▲: Always generated
△: Generated only when SPIE = 1
×: Don't care

(ii) When WTIM = 1

ST	AD6 to AD0	R/$\overline{W}$	$\overline{ACK}$	D7 to D0	$\overline{ACK}$	D7 to D0	$\overline{ACK}$	SP

▲1 ▲2 ▲3 ▲4 △5

▲1: IICS = 0110×010B
▲2: IICS = 0010×110B
▲3: IICS = 0010×100B
▲4: IICS = 0010××00B
△5: IICS = 00000001B

Remark ▲: Always generated
△: Generated only when SPIE = 1
×: Don't care

(6) Operation when arbitration loss occurs (no communication after arbitration loss)

When the device is used as a master in a multi-master system, read the MSTS bit each time interrupt request signal INTIICA has occurred to check the arbitration result.

(a) When arbitration loss occurs during transmission of slave address data (when WTIM = 1)

ST	AD6 to AD0	R/$\overline{W}$	$\overline{ACK}$	D7 to D0	$\overline{ACK}$	D7 to D0	$\overline{ACK}$	SP

▲1 △2

▲1: IICS = 01000110B
△2: IICS = 00000001B

Remark ▲: Always generated
△: Generated only when SPIE = 1

(b) When arbitration loss occurs during transmission of extension code

ST	AD6 to AD0	R/$\overline{W}$	$\overline{ACK}$	D7 to D0	$\overline{ACK}$	D7 to D0	$\overline{ACK}$	SP
			▲1					△2

▲1: IICS = 0110×010B
Sets LREL = 1 by software
△2: IICS = 00000001B

Remark ▲: Always generated
△: Generated only when SPIE = 1
×: Don't care

(c) When arbitration loss occurs during transmission of data

(i) When WTIM = 0

ST	AD6 to AD0	R/$\overline{W}$	$\overline{ACK}$	D7 to D0	$\overline{ACK}$	D7 to D0	$\overline{ACK}$	SP
				▲1	▲2			△3

▲1: IICS = 10001110B
▲2: IICS = 01000000B
△3: IICS = 00000001B

Remark ▲: Always generated
△: Generated only when SPIE = 1

(ii) When WTIM = 1

ST	AD6 to AD0	R/$\overline{W}$	$\overline{ACK}$	D7 to D0	$\overline{ACK}$	D7 to D0	$\overline{ACK}$	SP

▲1 ▲2 △3

▲1: IICS = 10001110B
▲2: IICS = 01000100B
△3: IICS = 00000001B

Remark ▲: Always generated
△: Generated only when SPIE = 1

(d) When loss occurs due to restart condition during data transfer

(i) Not extension code (Example: unmatches with SVA)

ST	AD6 to AD0	R/$\overline{W}$	$\overline{ACK}$	D7 to Dn	ST	AD6 to AD0	R/$\overline{W}$	$\overline{ACK}$	D7 to D0	$\overline{ACK}$	SP

▲1 ▲2 △3

▲1: IICS = 1000×110B
▲2: IICS = 01000110B
△3: IICS = 00000001B

Remark ▲: Always generated
△: Generated only when SPIE = 1
×: Don't care
n = 6 to 0

(ii) Extension code

ST	AD6 to AD0	R/$\overline{W}$	$\overline{ACK}$	D7 to Dn	ST	AD6 to AD0	R/$\overline{W}$	$\overline{ACK}$	D7 to D0	$\overline{ACK}$	SP
				▲1				▲2			△3

▲1: IICS = 1000×110B
▲2: IICS = 01100010B
Sets LREL = 1 by software
△3: IICS = 00000001B

Remark ▲: Always generated
△: Generated only when SPIE = 1
×: Don't care
n = 6 to 0

(e) When loss occurs due to stop condition during data transfer

ST	AD6 to AD0	R/$\overline{W}$	$\overline{ACK}$	D7 to Dn	SP
				▲1	△2

▲1: IICS = 10000110B
△2: IICS = 01000001B

Remark ▲: Always generated
△: Generated only when SPIE = 1
×: Don't care
n = 6 to 0

(f) When arbitration loss occurs due to low-level data when attempting to generate a restart condition

(i) When WTIM = 0

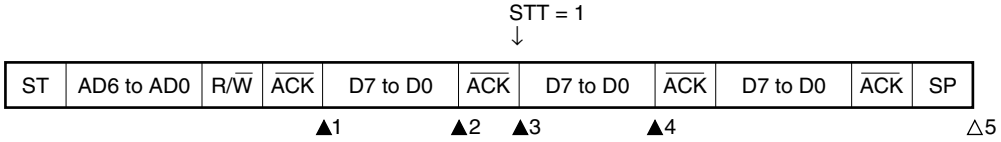

▲1: IICS = 1000×110B
▲2: IICS = 1000×000B (Sets WTIM to 1)
▲3: IICS = 1000×100B (Clears WTIM to 0)
▲4: IICS = 01000000B
△5: IICS = 00000001B

Remark ▲: Always generated
△: Generated only when SPIE = 1
×: Don't care

(ii) When WTIM = 1

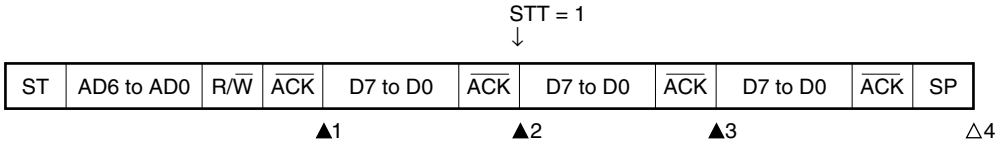

▲1: IICS = 1000×110B
▲2: IICS = 1000×100B (Sets STT to 1)
▲3: IICS = 01000100B
△4: IICS = 00000001B

Remark ▲: Always generated
△: Generated only when SPIE = 1
×: Don't care

(g) When arbitration loss occurs due to a stop condition when attempting to generate a restart condition

(i) When WTIM = 0

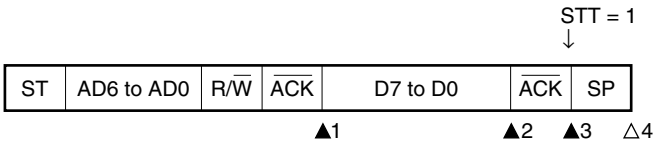

▲1: IICS = 1000×110B
▲2: IICS = 1000×000B (Sets WTIM to 1)
▲3: IICS = 1000××00B (Sets STT to 1)
△4: IICS = 01000001B

Remark ▲: Always generated
△: Generated only when SPIE = 1
×: Don't care

(ii) When WTIM = 1

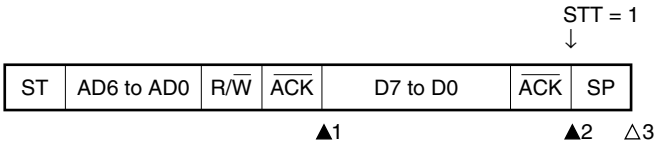

▲1: IICS = 1000×110B
▲2: IICS = 1000××00B (Sets STT to 1)
△3: IICS = 01000001B

Remark ▲: Always generated
△: Generated only when SPIE = 1
×: Don't care

(h) When arbitration loss occurs due to low-level data when attempting to generate a stop condition

(i) When WTIM = 0

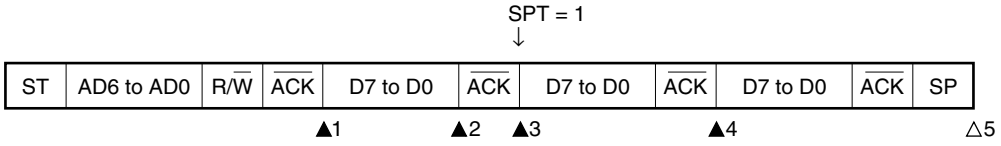

▲1: IICS = 1000×110B
▲2: IICS = 1000×000B (Sets WTIM to 1)
▲3: IICS = 1000×100B (Clears WTIM to 0)
▲4: IICS = 01000100B
△5: IICS = 00000001B

Remark ▲: Always generated
△: Generated only when SPIE = 1
×: Don't care

(ii) When WTIM = 1

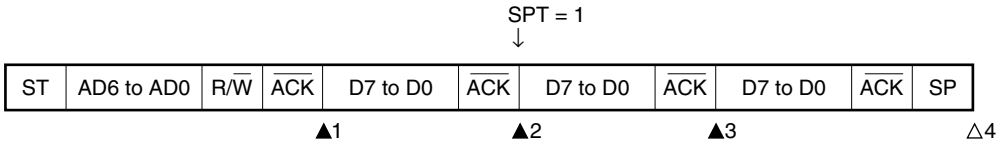

▲1: IICS = 1000×110B
▲2: IICS = 1000×100B (Sets SPT to 1)
▲3: IICS = 01000100B
△4: IICS = 00000001B

Remark ▲: Always generated
△: Generated only when SPIE = 1
×: Don't care

14.6 Timing Charts

When using the I^2C bus mode, the master device outputs an address via the serial bus to select one of several slave devices as its communication partner.

After outputting the slave address, the master device transmits the TRC bit (bit 3 of the IICA status register (IICS)), which specifies the data transfer direction, and then starts serial communication with the slave device.

Figures 14-32 and 14-33 show timing charts of the data communication.

The IICA shift register (IICA)'s shift operation is synchronized with the falling edge of the serial clock (SCL0). The transmit data is transferred to the SO latch and is output (MSB first) via the SDA0 pin.

Data input via the SDA0 pin is captured into IICA at the rising edge of SCL0.

Figure 14-32. Example of Master to Slave Communication (When 9-Clock Wait Is Selected for Both Master and Slave) (1/3)

(1) Start condition ~ address

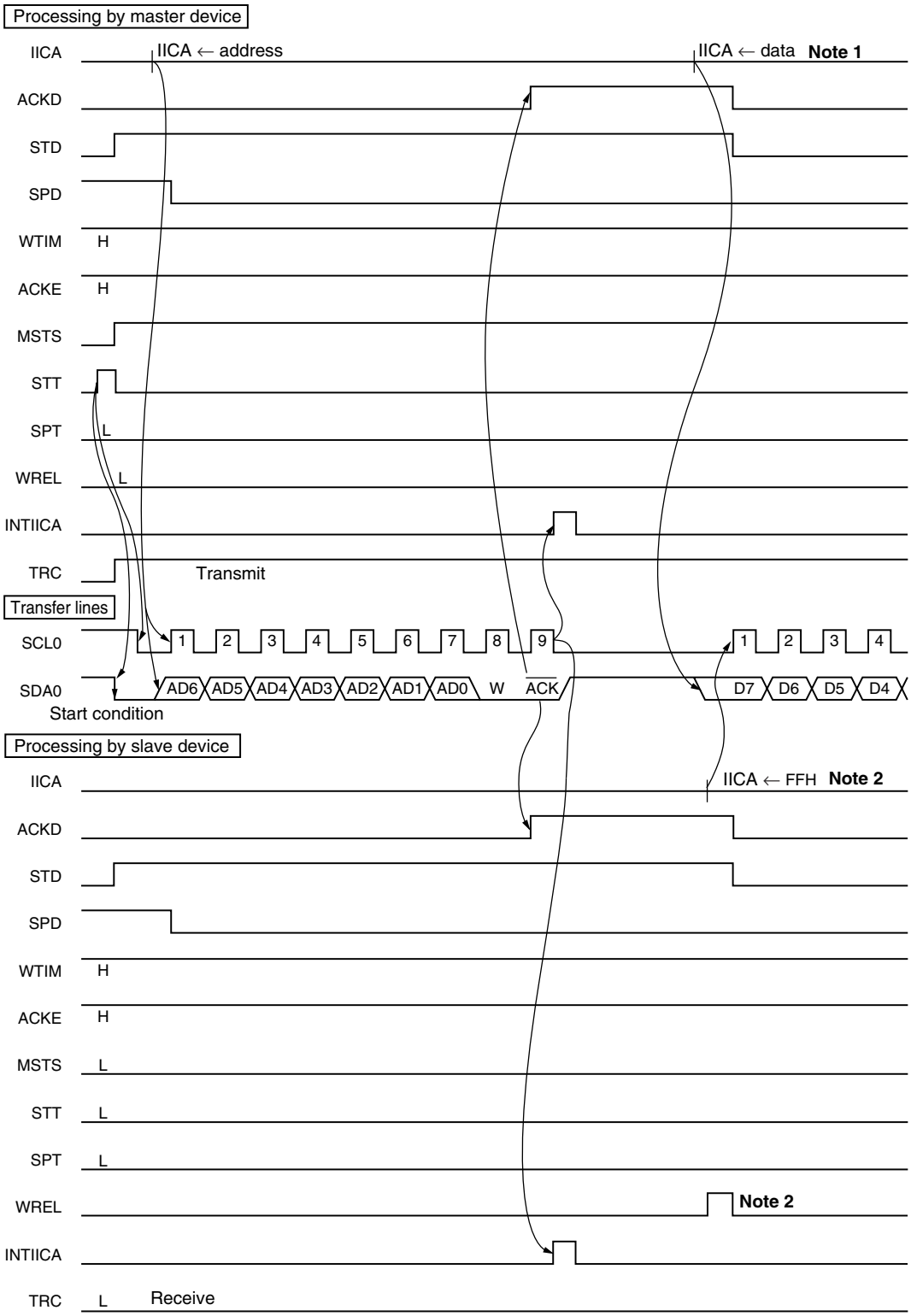

Notes 1. Write data to IICA, not setting WREL, in order to cancel a wait state during master transmission.

2. To cancel slave wait, write “FFH” to IICA or set WREL.

Figure 14-32. Example of Master to Slave Communication (When 9-Clock Wait Is Selected for Both Master and Slave) (2/3)

(2) Data

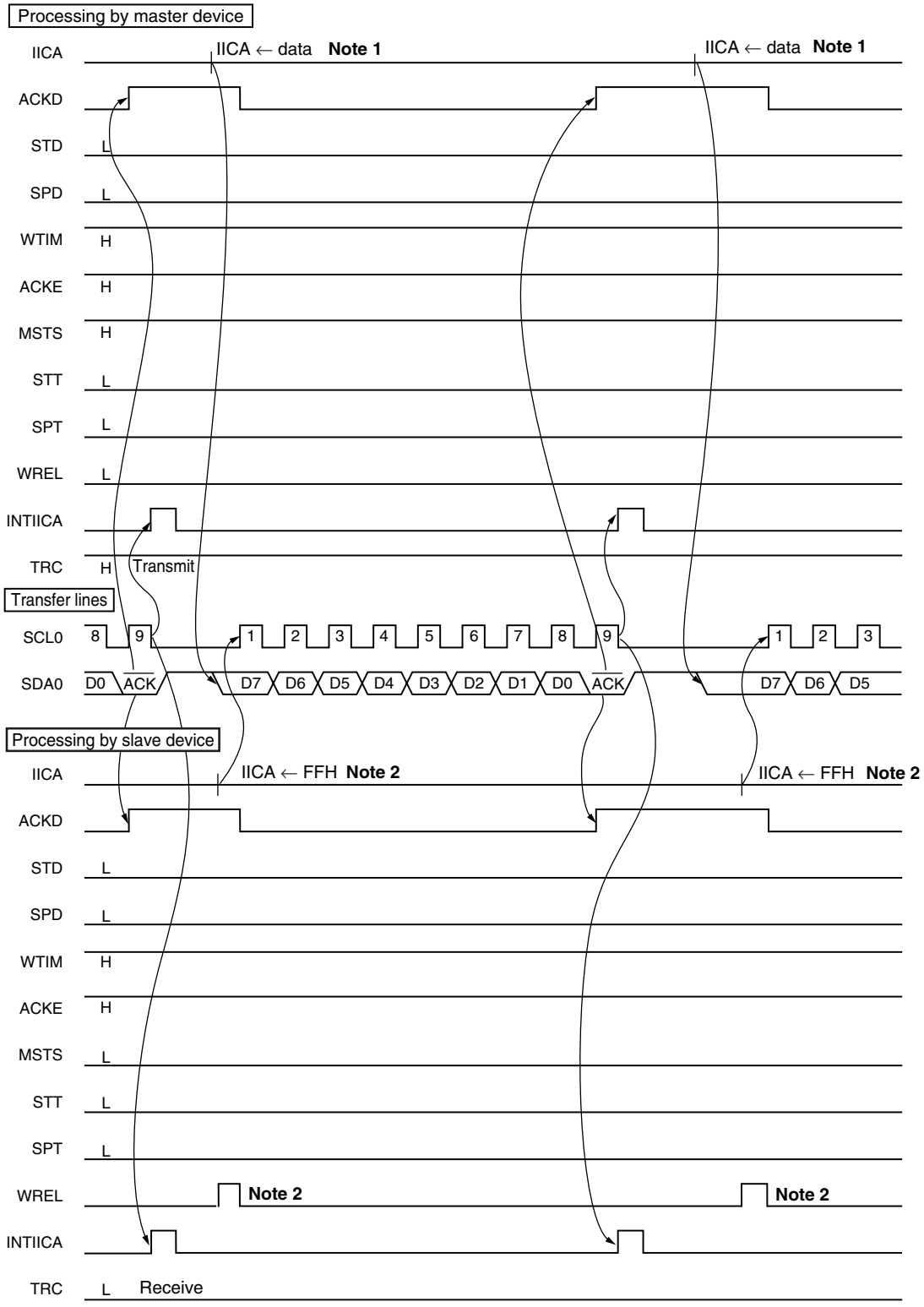

Notes 1. Write data to IICA, not setting WREL, in order to cancel a wait state during master transmission.

2. To cancel slave wait, write “FFH” to IICA or set WREL.

Figure 14-32. Example of Master to Slave Communication (When 9-Clock Wait Is Selected for Both Master and Slave) (3/3)

(3) Stop condition

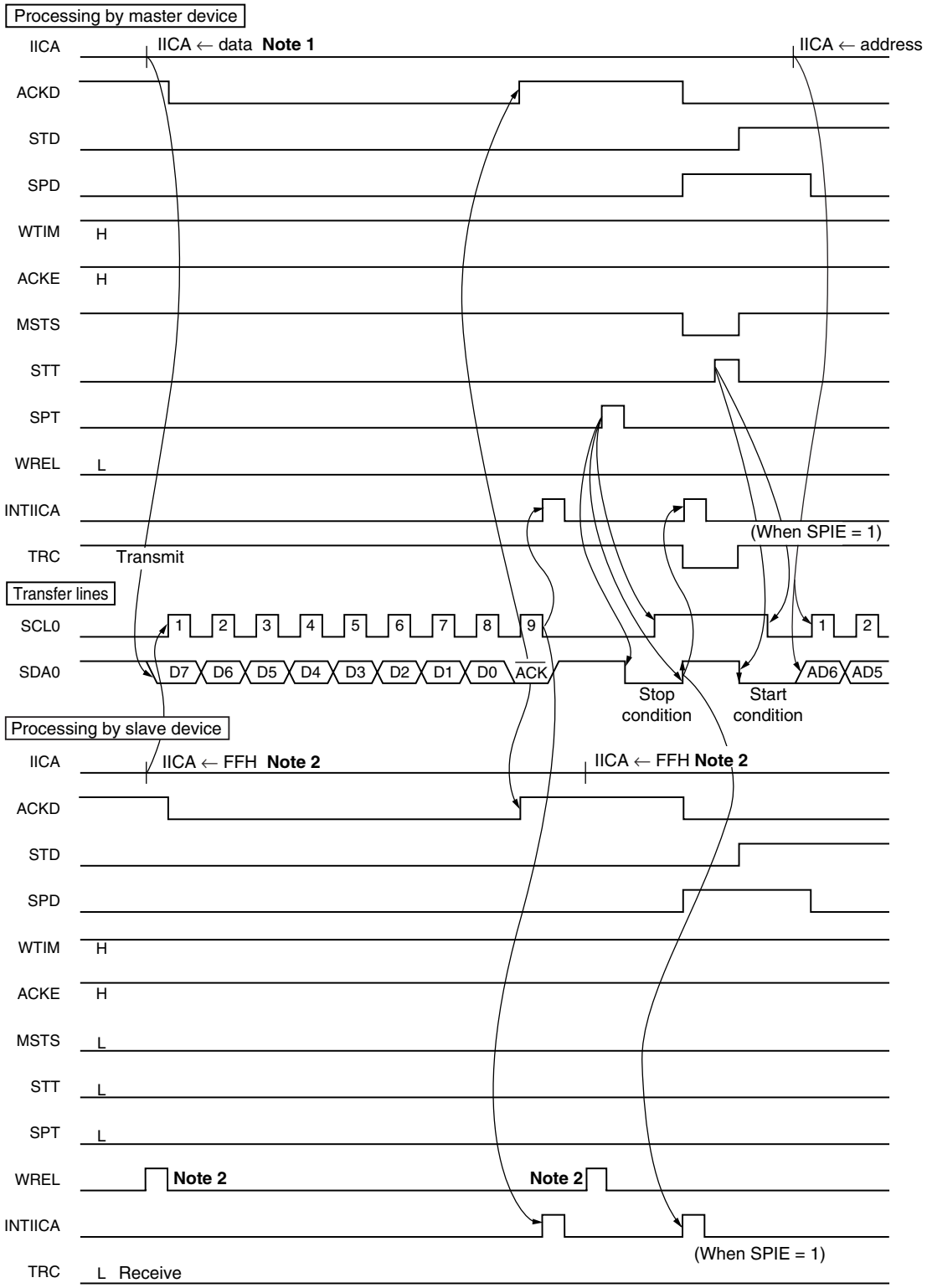

Notes 1. Write data to IICA, not setting WREL, in order to cancel a wait state during master transmission.

2. To cancel slave wait, write “FFH” to IICA or set WREL.

Figure 14-33. Example of Slave to Master Communication
(When 8-Clock Wait Is Selected for Master, 9-Clock Wait Is Selected for Slave) (1/3)

(1) Start condition ~ address

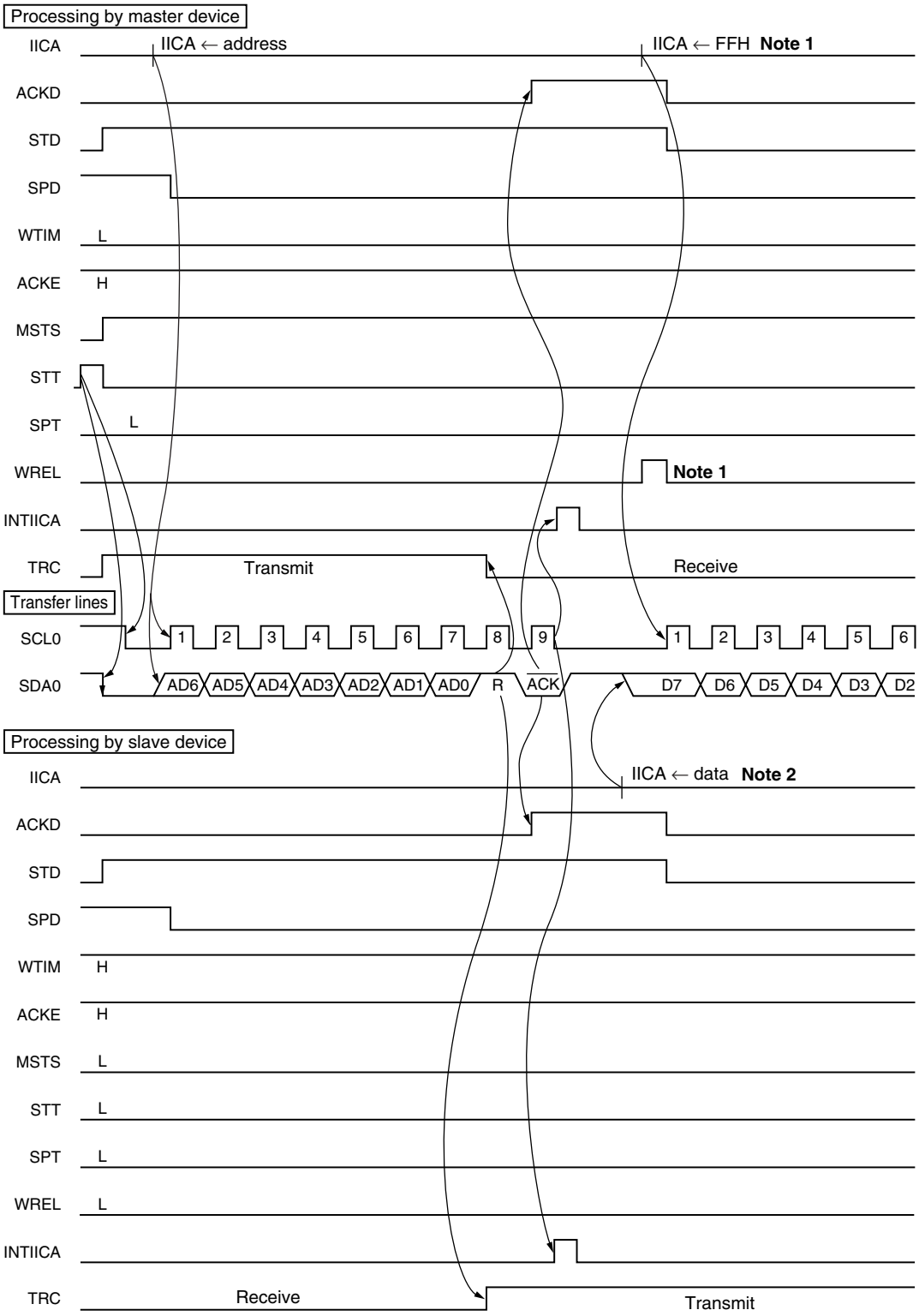

Notes 1. To cancel master wait, write “FFH” to IICA or set WREL.

2. Write data to IICA, not setting WREL, in order to cancel a wait state during slave transmission.

Figure 14-33. Example of Slave to Master Communication
(When 8-Clock Wait Is Selected for Master, 9-Clock Wait Is Selected for Slave) (2/3)

(2) Data

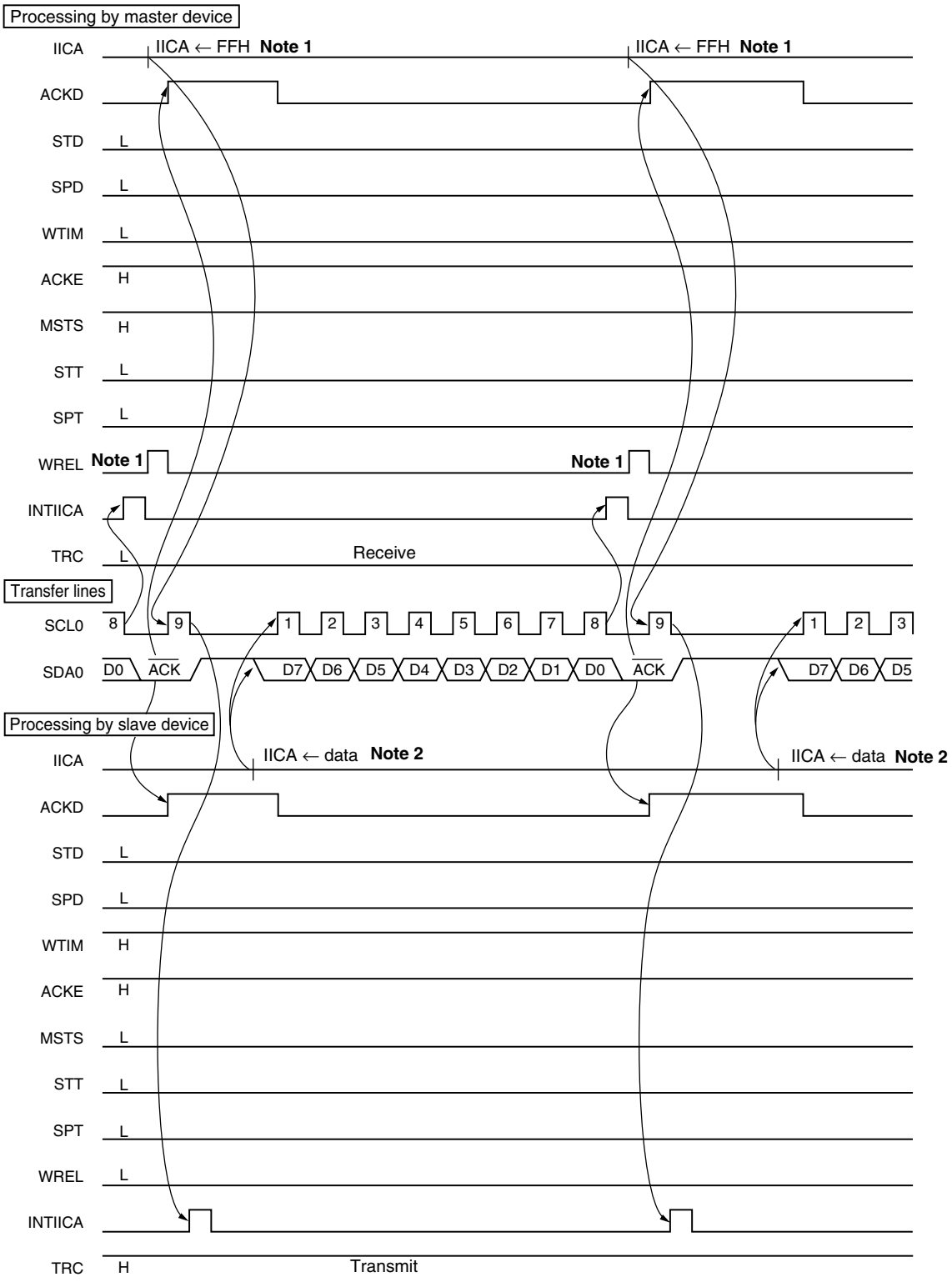

Notes 1. To cancel master wait, write “FFH” to IICA or set WREL.

2. Write data to IICA, not setting WREL, in order to cancel a wait state during slave transmission.

Figure 14-33. Example of Slave to Master Communication
(When 8-Clock and 9-Clock Wait Is Selected for Master, 9-Clock Wait Is Selected for Slave) (3/3)

(3) Stop condition

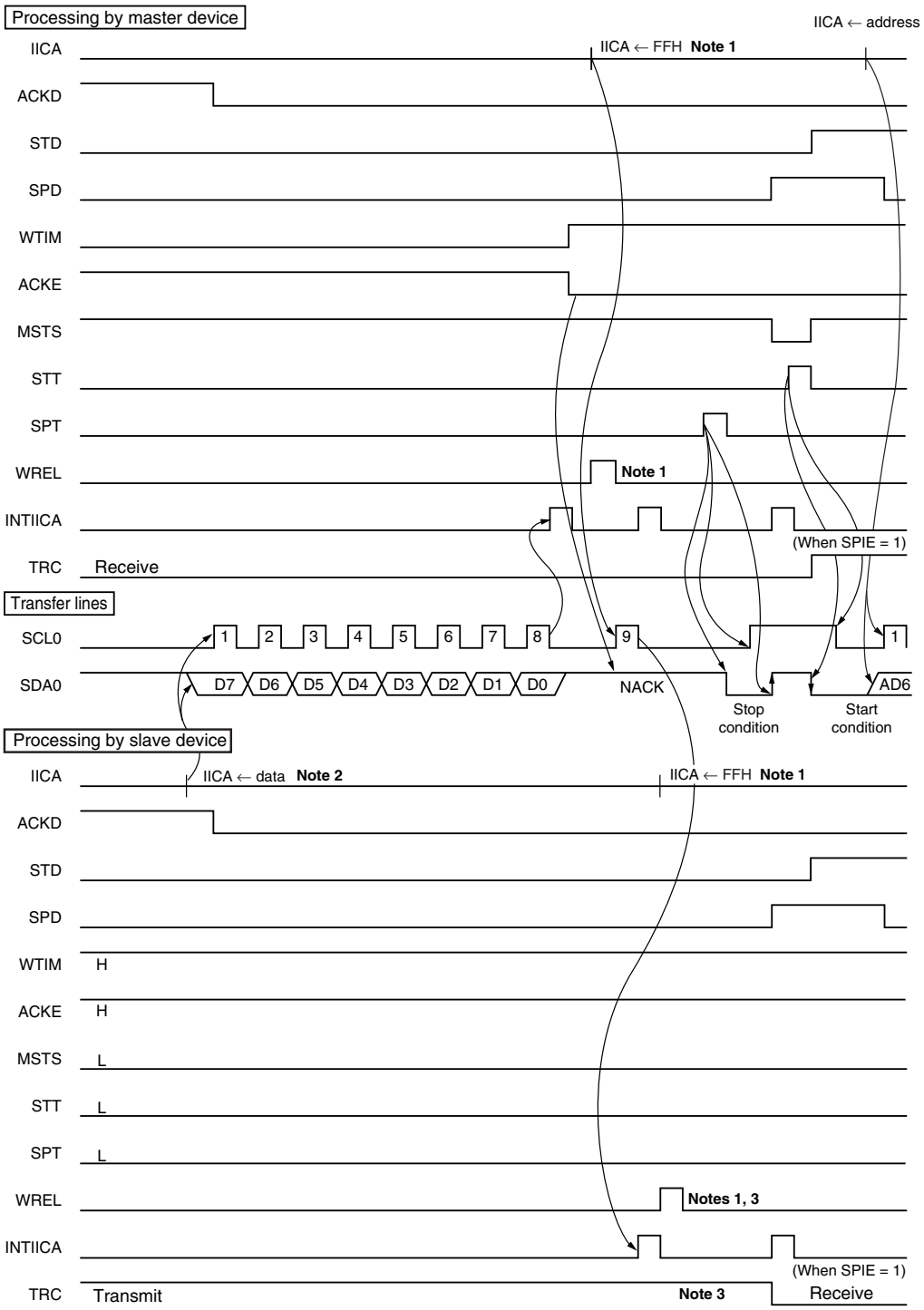

Notes 1. To cancel wait, write “FFH” to IICA or set WREL.

2. Write data to IICA, not setting WREL, in order to cancel a wait state during slave transmission.

3. If a wait state during slave transmission is canceled by setting WREL, TRC will be cleared.

CHAPTER 15 MULTIPLIER/DIVIDER

15.1 Functions of Multiplier/Divider

The multiplier/divider has the following functions.

- 16 bits × 16 bits = 32 bits (multiplication)
- 32 bits ÷ 32 bits = 32 bits, 32-bit remainder (division)

15.2 Configuration of Multiplier/Divider

The multiplier/divider consists of the following hardware.

Table 15-1. Configuration of Multiplier/Divider

Item	Configuration
Registers	Multiplication/division data register A (L) (MDAL) Multiplication/division data register A (H) (MDAH) Multiplication/division data register B (L) (MDBL) Multiplication/division data register B (H) (MDBH) Multiplication/division data register C (L) (MDCL) Multiplication/division data register C (H) (MDCH)
Control register	Multiplication/division control register (MDUC)

Figure 15-1 shows a block diagram of the multiplier/divider.

Figure 15-1. Block Diagram of Multiplier/Divider

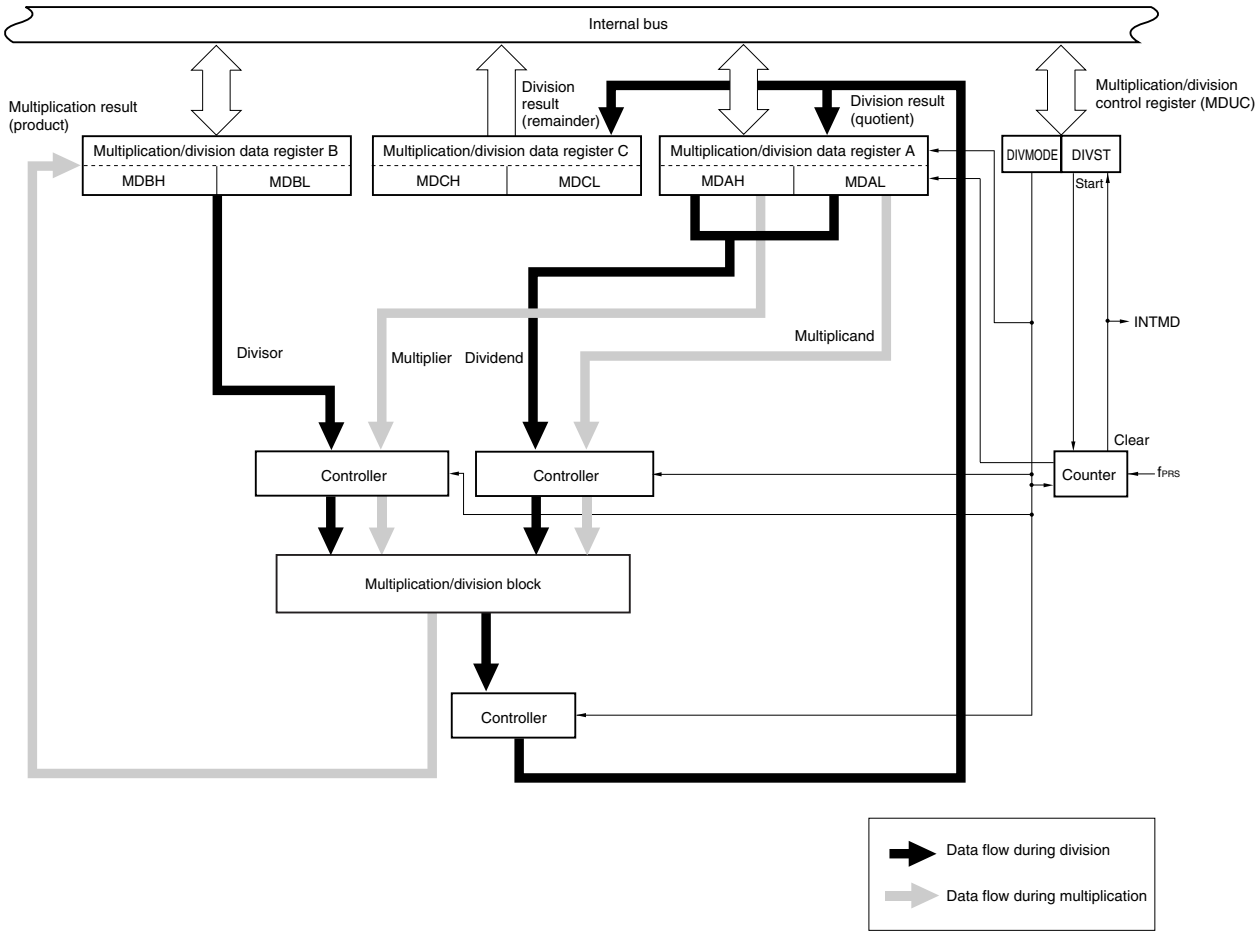

(1) Multiplication/division data register A (MDAH, MDAL)

The MDAH and MDAL registers set the values that are used for a multiplication or division operation and store the operation result. They set the multiplier and multiplicand data in the multiplication mode, and set the dividend data in the division mode. Furthermore, the operation result (quotient) is stored in the MDAH and MDAL registers in the division mode.

MDAH and MDAL can be set by a 16-bit manipulation instruction.

Reset signal generation clears these registers to 0000H.

Figure 15-2. Format of Multiplication/Division Data Register A (MDAH, MDAL)

Address: FFFF0H, FFFF1H, FFFF2H, FFFF3H After reset: 0000H, 0000H R/W

Symbol	FFFF3H								FFFF2H							
MDAH	MDAH 15	MDAH 14	MDAH 13	MDAH 12	MDAH 11	MDAH 10	MDAH 9	MDAH 8	MDAH 7	MDAH 6	MDAH 5	MDAH 4	MDAH 3	MDAH 2	MDAH 1	MDAH 0

Symbol	FFFF1H								FFFF0H							
MDAL	MDAL 15	MDAL 14	MDAL 13	MDAL 12	MDAL 11	MDAL 10	MDAL 9	MDAL 8	MDAL 7	MDAL 6	MDAL 5	MDAL 4	MDAL 3	MDAL 2	MDAL 1	MDAL 0

Cautions 1. Do not rewrite the MDAH and MDAL values during division operation processing (while the multiplication/division control register (MDUC) is 81H). The operation will be executed in this case, but the operation result will be an undefined value.

2. The MDAH and MDAL values read during division operation processing (while MDUC is 81H) will not be guaranteed.

The following table shows the functions of MDAH and MDAL during operation execution.

Table 15-2. Functions of MDAH and MDAL During Operation Execution

DIVMODE	Operation Mode	Setting	Operation Result
0	Multiplication mode	MDAH: Multiplier MDAL: Multiplicand	–
1	Division mode	MDAH: Divisor (higher 16 bits) MDAL: Dividend (lower 16 bits)	MDAH: Division result (quotient) Higher 16 bits MDAL: Division result (quotient) Lower 16 bits

Remark DIVMODE: Bit 7 of the multiplication/division control register (MDUC)

(2) Multiplication/division data register B (MDBL, MDBH)

The MDBH and MDBL registers set the values that are used for multiplication or division operation and store the operation result. They store the operation result (product) in the multiplication mode and set the divisor data in the division mode.

MDBH and MDBL can be set by a 16-bit manipulation instruction.

Reset signal generation clears these registers to 0000H.

Figure 15-3. Format of Multiplication/Division Data Register B (MDBH, MDBL)

Address: FFFF6H, FFFF7H, FFFF4H, FFFF5H After reset: 0000H, 0000H R/W

Symbol	FFFF5H								FFFF4H							
MDBH	MDBH 15	MDBH 14	MDBH 13	MDBH 12	MDBH 11	MDBH 10	MDBH 9	MDBH 8	MDBH 7	MDBH 6	MDBH 5	MDBH 4	MDBH 3	MDBH 2	MDBH 1	MDBH 0

Symbol	FFFF7H								FFFF6H							
MDBL	MDBL 15	MDBL 14	MDBL 13	MDBL 12	MDBL 11	MDBL 10	MDBL 9	MDBL 8	MDBL 7	MDBL 6	MDBL 5	MDBL 4	MDBHL 3	MDBL 2	MDBL 1	MDBL 0

Cautions 1. Do not rewrite the MDBH and MDBL values during division operation processing (while the multiplication/division control register (MDUC) is 81H). The operation result will be an undefined value.

2. Do not set MDBH and MDBL to 0000H in the division mode. If they are set, the operation result will be an undefined value.

The following table shows the functions of MDBH and MDBL during operation execution.

Table 15-3. Functions of MDBH and MDBL During Operation Execution

DIVMODE	Operation Mode	Setting	Operation Result
0	Multiplication mode	–	MDBH: Multiplication result (product) Higher 16 bits MDBL: Multiplication result (product) Lower 16 bits
1	Division mode	MDBH: Divisor (higher 16 bits) MDBL: Dividend (lower 16 bits)	–

Remark DIVMODE: Bit 7 of the multiplication/division control register (MDUC)

(3) Multiplication/division data register C (MDCL, MDCH)

The MDCH and MDCL registers store remainder value of the operation result in the division mode. They are not used in the multiplication mode.

MDCH and MDCL can be read by a 16-bit manipulation instruction.

Reset signal generation clears these registers to 0000H.

Figure 15-4. Format of Multiplication/Division Data Register C (MDCH, MDCL)

Address: F00E0H, F00E1H, F00E2H, F00E3H After reset: 0000H, 0000H R

Symbol	F00E3H								F00E2H							
MDCH	MDCH 15	MDCH 14	MDCH 13	MDCH 12	MDCH 11	MDCH 10	MDCH 9	MDCH 8	MDCH 7	MDCH 6	MDCH 5	MDCH 4	MDCH 3	MDCH 2	MDCH 1	MDCH 0

Symbol	F00E1H								F00E0H							
MDCL	MDCL 15	MDCL 14	MDCL 13	MDCL 12	MDCL 11	MDCL 10	MDCL 9	MDCL 8	MDCL 7	MDCL 6	MDCL 5	MDCL 4	MDCL 3	MDCL 2	MDCL 1	MDCL 0

Caution The MDCH and MDCL values read during division operation processing (while the multiplication/division control register (MDUC) is 81H) will not be guaranteed.

Table 15-4. Functions of MDCH and MDCL During Operation Execution

DIVMODE	Operation Mode	Setting	Operation Result
0	Multiplication mode	–	–
1	Division mode	–	MDCH: Remainder (higher 16 bits) MDCL: Remainder (lower 16 bits)

Remark DIVMODE: Bit 7 of the multiplication/division control register (MDUC)

The register configuration differs between when multiplication is executed and when division is executed, as follows.

- Register configuration during multiplication

  <Multiplier A> <Multiplier B> <Product>

  MDAL (bits 15 to 0) × MDAH (bits 15 to 0) = [MDBH (bits 15 to 0), MDBL (bits 15 to 0)]

- Register configuration during division

  <Dividend> <Divisor>

  [MDAH (bits 15 to 0), MDAL (bits 15 to 0)] ÷ [MDBH (bits 15 to 0), MDBL (bits 15 to 0)] =

  <Quotient> <Remainder>

  [MDAH (bits 15 to 0), MDAL (bits 15 to 0)] ··· [MDCH (bits 15 to 0), MDCL (bits 15 to 0)]

15.3 Register Controlling Multiplier/Divider

The multiplier/divider is controlled by using the multiplication/division control register (MDUC).

(1) Multiplication/division control register (MDUC)

MDUC is an 8-bit register that controls the operation of the multiplier/divider.
MDUC can be set by a 1-bit or 8-bit memory manipulation instruction.
Reset signal generation clears this register to 00H.

Figure 15-5. Format of Multiplication/Division Control Register (MDUC)

Address: F00E8H After reset: 00H R/W

Symbol	<7>	6	5	4	3	2	1	<0>
MDUC	DIVMODE	0	0	0	0	0	0	DIVST

DIVMODE	Operation mode (multiplication/division) selection
0	Multiplication mode
1	Division mode

DIVST[Note]	Division operation start/stop
0	Division operation processing complete
1	Starts division operation/division operation processing in progress

Note DIVST can only be set (1) in the division mode. In the division mode, division operation is started by setting (1) DIVST. DIVST is automatically cleared (0) when the operation ends. In the multiplication mode, operation is automatically started by setting the multiplier and multiplicand to MDAH and MDAL, respectively.

Cautions 1. Do not rewrite DIVMODE during operation processing (while DIVST is 1). If it is rewritten, the operation result will be an undefined value.

2. DIVST cannot be cleared (0) by using software during division operation processing (while DIVST is 1).

15.4 Operations of Multiplier/Divider

15.4.1 Multiplication operation

- Initial setting
  <1> Set bit 7 (DIVMODE) of the multiplication/division control register (MDUC) to 0.
  <2> Set the multiplicand to the multiplication/division data register A (L) (MDAL).
  <3> Set the multiplier to the multiplication/division data register A (H) (MDAH).
  (There is no preference in the order of executing steps <2> and <3>. Multiplication operation is automatically started when the multiplier and multiplicand are set to MDAH and MDAL, respectively.)
- During operation processing
  <4> Wait for at least one clock. The operation will end when one clock has been issued.
- Operation end
  <5> Read the product (lower 16 bits) from the multiplication/division data register B (L) (MDBL).
  <6> Read the product (higher 16 bits) from the multiplication/division data register B (H) (MDBH).
  (There is no preference in the order of executing steps <5> and <6>.)
- Next operation
  <7> To execute multiplication operation next, start from the “Initial setting” for multiplication operation.
  <8> To execute division operation next, start from the “Initial setting” in **15.4.2 Division operation**.

Remark Steps <1> to <7> correspond to <1> to <7> in Figure 15-6.

Figure 15-6. Timing Diagram of Multiplication Operation (0003H × 0002H)

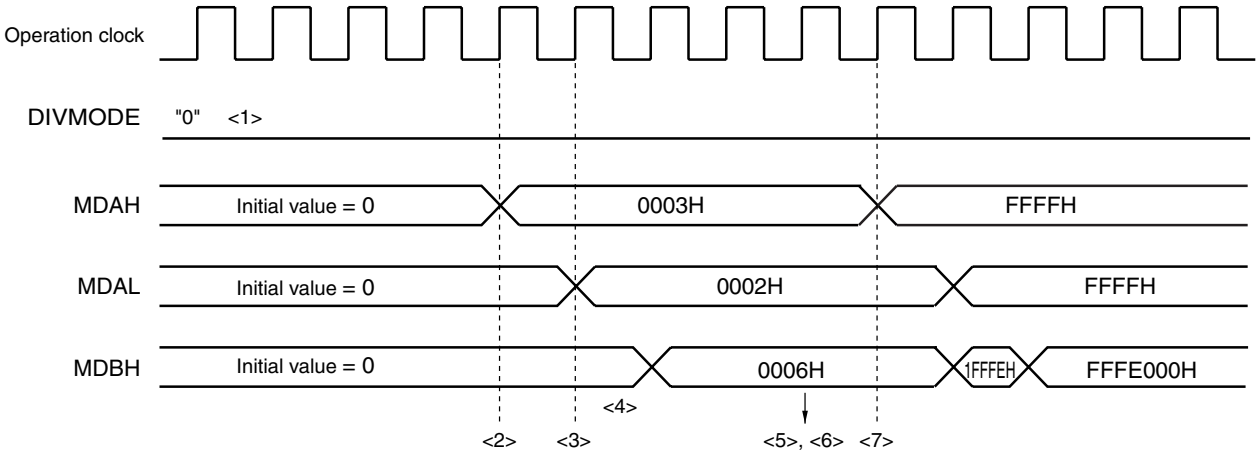

15.4.2 Division operation

- Initial setting
  <1> Set bit 7 (DIVMODE) of the multiplication/division control register (MDUC) to 1.
  <2> Set the dividend (higher 16 bits) to the multiplication/division data register A (H) (MDAH).
  <3> Set the dividend (lower 16 bits) to the multiplication/division data register A (L) (MDAL).
  <4> Set the divisor (higher 16 bits) to the multiplication/division data register B (H) (MDBH).
  <5> Set the divisor (lower 16 bits) to the multiplication/division data register B (L) (MDBL).
  <6> Set bit 0 (DIVST) of MDUC to 1.
  (There is no preference in the order of executing steps <2> to <5>.)
- During operation processing
  <7> The operation will end when one of the following processing is completed.
  - A wait of at least 16 clocks (The operation will end when 16 clocks have been issued.)
  - A check whether DIVST has been cleared
  - Generation of a division completion interrupt (INTMD)

  (The read values of MDBL, MDBH, MDCL, and MDCH during operation processing are not guaranteed.)
- Operation end
  <8> DIVST is cleared (0) and an interrupt request signal (INTMD) is generated (end of operation).
  <9> Read the quotient (lower 16 bits) from MDAL.
  <10> Read the quotient (higher 16 bits) from MDAH.
  <11> Read the remainder (lower 16 bits) from multiplication/division data register C (L) (MDCL).
  <12> Read the remainder (higher 16 bits) from the multiplication/division data register C (H) (MDCH).
  (There is no preference in the order of executing steps <9> to <12>.)
- Next operation
  <13> To execute multiplication operation next, start from the “Initial setting” in **15.4.1 Multiplication operation**.
  <14> To execute division operation next, start from the “Initial setting” for division operation.

Remark Steps <1> to <12> correspond to <1> to <12> in Figure 15-7.

Figure 15-7. Timing Diagram of Division Operation (Example: 35 ÷ 6 = 5, Remainder 5)

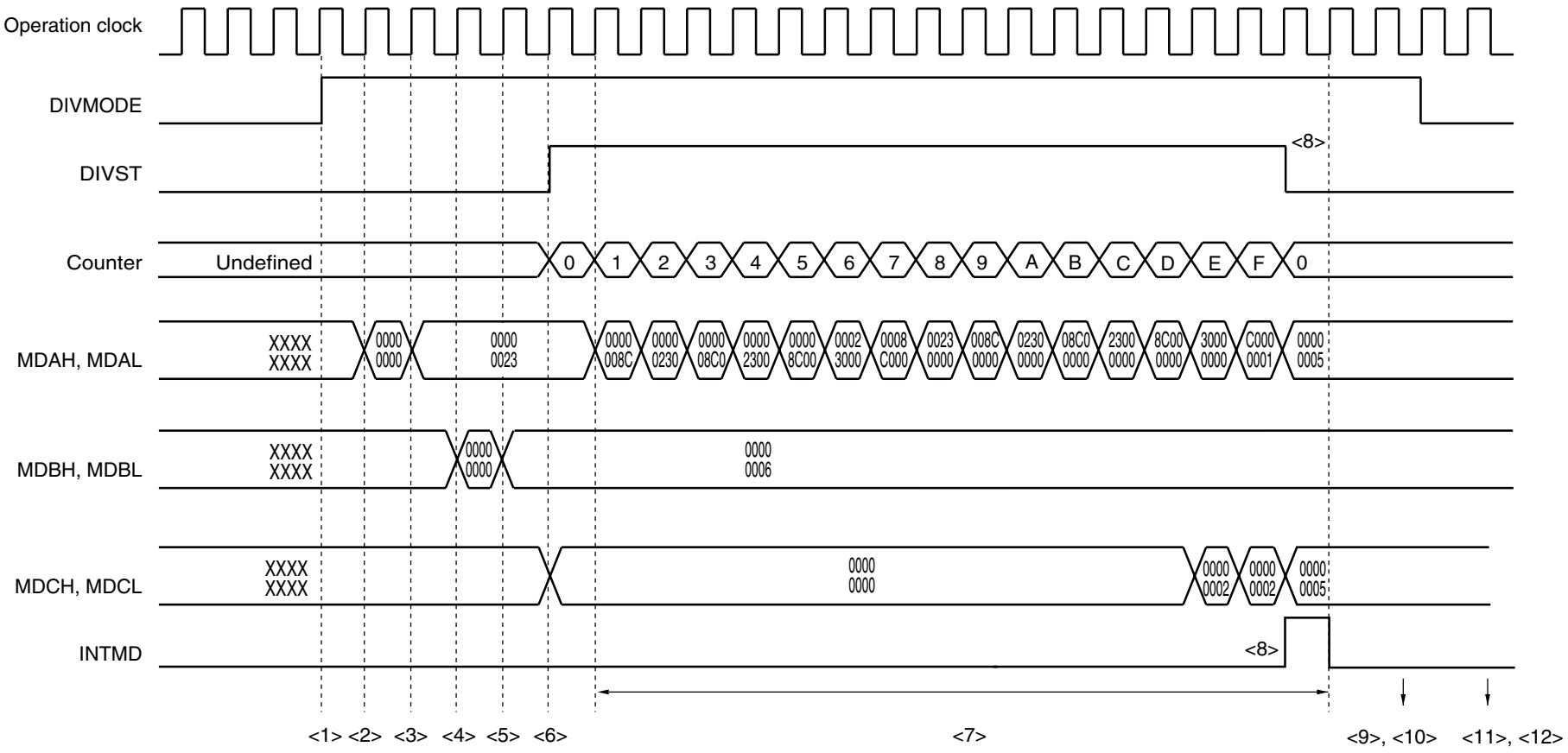

CHAPTER 16 DMA CONTROLLER

The 78K0R/Ix3 has an internal DMA (Direct Memory Access) controller.

Data can be automatically transferred between the peripheral hardware supporting DMA, SFRs, and internal RAM without via CPU.

As a result, the normal internal operation of the CPU and data transfer can be executed in parallel with transfer between the SFR and internal RAM, and therefore, a large capacity of data can be processed. In addition, real-time control using communication, timer, and A/D can also be realized.

16.1 Functions of DMA Controller

- ○ Number of DMA channels: 2
- ○ Transfer unit: 8 or 16 bits
- ○ Maximum transfer unit: 1024 times
- ○ Transfer type: 2-cycle transfer (One transfer is processed in 2 clocks and the CPU stops during that processing.)
- ○ Transfer mode: Single-transfer mode
- ○ Transfer request: Selectable from the following peripheral hardware interrupts
  - A/D converter
  - Serial interface (CSI00[Note], CSI01[Note], CSI10, UART0, UART1, or IIC10)
  - Timer (channel 0, 1, 4, or 5)
- ○ Transfer target: Between SFR and internal RAM

Here are examples of functions using DMA.

- Successive transfer of serial interface
- Batch transfer of analog data
- Capturing A/D conversion result at fixed interval
- Capturing port value at fixed interval

Note 44-pin and 48-pin products of 78K0R/IC3, 78K0R/ID3 and 78K0R/IE3 only.

16.2 Configuration of DMA Controller

The DMA controller includes the following hardware.

Table 16-1. Configuration of DMA Controller

Item	Configuration
Address registers	• DMA SFR address registers 0, 1 (DSA0, DSA1) • DMA RAM address registers 0, 1 (DRA0, DRA1)
Count register	• DMA byte count registers 0, 1 (DBC0, DBC1)
Control registers	• DMA mode control registers 0, 1 (DMC0, DMC1) • DMA operation control register 0, 1 (DRC0, DRC1)

(1) DMA SFR address register n (DSAn)

This is an 8-bit register that is used to set an SFR address that is the transfer source or destination of DMA channel n.

Set the lower 8 bits of the SFR addresses FFF00H to FFFFFH[Note].

This register is not automatically incremented but fixed to a specific value.

In the 16-bit transfer mode, the least significant bit is ignored and is treated as an even address.

DSAn can be read or written in 8-bit units. However, it cannot be written during DMA transfer.

Reset signal generation clears this register to 00H.

Note Except for address FFFFEH because the PMC register is allocated there.

Figure 16-1. Format of DMA SFR Address Register n (DSAn)

Address: FFFB0H (DSA0), FFFB1H (DSA1) After reset: 00H R/W

	7	6	5	4	3	2	1	0
DSAn								

Remark n: DMA channel number (n = 0, 1)

(2) DMA RAM address register n (DRAn)

This is a 16-bit register that is used to set a RAM address that is the transfer source or destination of DMA channel n.

Addresses of the internal RAM area other than the general-purpose registers (FF900H to FFEDFH in the case of the μPD78F1203, 78F1213, 78F1223, 78F1223) can be set to this register.

Set the lower 16 bits of the RAM address.

This register is automatically incremented when DMA transfer has been started. It is incremented by +1 in the 8-bit transfer mode and by +2 in the 16-bit transfer mode. DMA transfer is started from the address set to this DRAn register. When the data of the last address has been transferred, DRAn stops with the value of the last address +1 in the 8-bit transfer mode, and the last address +2 in the 16-bit transfer mode.

In the 16-bit transfer mode, the least significant bit is ignored and is treated as an even address.

DRAn can be read or written in 8-bit or 16-bit units. However, it cannot be written during DMA transfer.

Reset signal generation clears this register to 0000H.

Figure 16-2. Format of DMA RAM Address Register n (DRAn)

Address: FFFB2H, FFFB3H (DRA0), FFFB4H, FFFB5H (DRA1) After reset: 0000H R/W

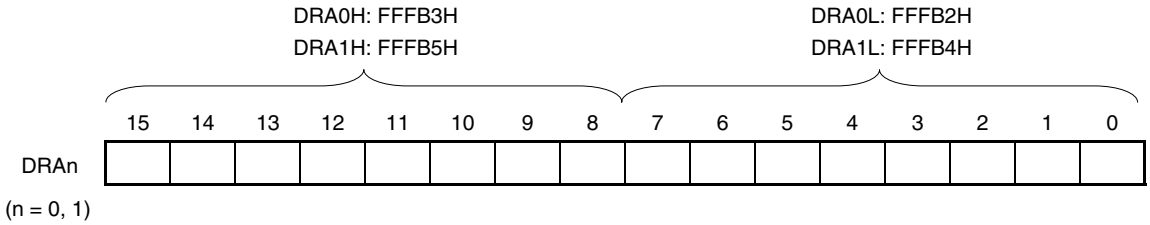

Remark n: DMA channel number (n = 0, 1)

(3) DMA byte count register n (DBCn)

This is a 10-bit register that is used to set the number of times DMA channel n executes transfer. Be sure to set the number of times of transfer to this DBCn register before executing DMA transfer (up to 1024 times).

Each time DMA transfer has been executed, this register is automatically decremented. By reading this DBCn register during DMA transfer, the remaining number of times of transfer can be learned.

DBCn can be read or written in 8-bit or 16-bit units. However, it cannot be written during DMA transfer.

Reset signal generation clears this register to 0000H.

Figure 16-3. Format of DMA Byte Count Register n (DBCn)

Address: FFFB6H, FFFB7H (DBC0), FFFB8H, FFFB9H (DBC1) After reset: 0000H R/W

DBC0H: FFFB7H
DBC1H: FFFB9H

DBC0L: FFFB6H
DBC1L: FFFB8H

	15	14	13	12	11	10	9	8	7	6	5	4	3	2	1	0
DBCn	0	0	0	0	0	0										

(n = 0, 1)

DBCn[9:0]	Number of Times of Transfer (When DBCn is Written)	Remaining Number of Times of Transfer (When DBCn is Read)
000H	1024	Completion of transfer or waiting for 1024 times of DMA transfer
001H	1	Waiting for remaining one time of DMA transfer
002H	2	Waiting for remaining two times of DMA transfer
003H	3	Waiting for remaining three times of DMA transfer
• • •	• • •	• • •
3FEH	1022	Waiting for remaining 1022 times of DMA transfer
3FFH	1023	Waiting for remaining 1023 times of DMA transfer

Cautions 1. Be sure to clear bits 15 to 10 to “0”.

2. If the general-purpose register is specified or the internal RAM space is exceeded as a result of continuous transfer, the general-purpose register or SFR space are written or read, resulting in loss of data in these spaces. Be sure to set the number of times of transfer that is within the internal RAM space.

Remark n: DMA channel number (n = 0, 1)

16.3 Registers to Controlling DMA Controller

DMA controller is controlled by the following registers.

- DMA mode control register n (DMCn)
- DMA operation control register n (DRCn)

Remark n: DMA channel number (n = 0, 1)

(1) DMA mode control register n (DMCn)

DMCn is a register that is used to set a transfer mode of DMA channel n. It is used to select a transfer direction, data size, setting of pending, and start source. Bit 7 (STGn) is a software trigger that starts DMA.
Rewriting bits 6, 5, and 3 to 0 of DMCn is prohibited during operation (when DSTn = 1).
DMCn can be set by a 1-bit or 8-bit memory manipulation instruction.
Reset signal generation clears this register to 00H.

Figure 16-4. Format of DMA Mode Control Register n (DMCn) (1/2)

Address: FFFBAH (DMC0), FFFBBH (DMC1) After reset: 00H R/W

Symbol	<7>	<6>	<5>	<4>	3	2	1	0
DMCn	STGn	DRSn	DSn	DWAITn	IFCn3	IFCn2	IFCn1	IFCn0

STGn[Note]	DMA transfer start software trigger
0	No trigger operation
1	DMA transfer is started when DMA operation is enabled (DENn = 1).
DMA transfer is performed once by writing 1 to STGn when DMA operation is enabled (DENn = 1). When this bit is read, 0 is always read.	

DRSn	Selection of DMA transfer direction
0	SFR to internal RAM
1	Internal RAM to SFR

DSn	Specification of transfer data size for DMA transfer
0	8 bits
1	16 bits

DWAITn	Pending of DMA transfer
0	Executes DMA transfer upon DMA start request (not held pending).
1	Holds DMA start request pending if any.
DMA transfer that has been held pending can be started by clearing the value of DWAITn to 0. It takes 2 clocks to actually hold DMA transfer pending when the value of DWAITn is set to 1.	

Note The software trigger (STGn) can be used regardless of the IFCn0 to IFCn3 values.

Remark n: DMA channel number (n = 0, 1)

Figure 16-4. Format of DMA Mode Control Register n (DMCn) (2/2)

Address: FFFBAH (DMC0), FFFBBH (DMC1) After reset: 00H R/W

Symbol	<7>	<6>	<5>	<4>	3	2	1	0
DMCn	STGn	DRSn	DSn	DWAITn	IFCn3	IFCn2	IFCn1	IFCn0

IFCn 3	IFCn 2	IFCn 1	IFCn 0	Selection of DMA stat source[Note 1]	
				Trigger signal	Trigger contents
0	0	0	0	–	Disables DMA transfer by interrupt. (Only software trigger is enabled.)
0	0	1	0	INTTM00	End of timer channel 0 count or capture end interrupt
0	0	1	1	INTTM01	End of timer channel 1 count or capture end interrupt
0	1	0	0	INTTM04	End of timer channel 4 count or capture end interrupt
0	1	0	1	INTTM05	End of timer channel 5 count or capture end interrupt
0	1	1	0	INTST0/INTCSI00[Note 2]	UART0 transmission transfer end or buffer empty interrupt/CSI00 transfer end or buffer empty interrupt[Note 2]
0	1	1	1	INTSR0/INTCSI01[Note 2]	UART0 reception transfer end interrupt/CSI01 transfer end or buffer empty interrupt[Note 2]
1	0	0	0	INTST1/INTCSI10/INTIIC10	UART1 transmission transfer end or buffer empty interrupt/CSI10 transfer end or buffer empty interrupt/ IIC10 transfer end interrupt
1	0	0	1	INTSR1	UART1 reception transfer end interrupt
1	1	0	0	INTAD	A/D conversion end interrupt
Other than above				Setting prohibited	

Notes 1. The software trigger (STGn) can be used regardless of the IFCn0 to IFCn3 values.

2. 44-pin and 48-pin products of 78K0R/IC3, 78K0R/ID3 and 78K0R/IE3 only.

Remark n: DMA channel number (n = 0, 1)

(2) DMA operation control register n (DRCn)

DRCn is a register that is used to enable or disable transfer of DMA channel n.

Rewriting bit 7 (DENn) of this register is prohibited during operation (when DSTn = 1).

DRCn can be set by a 1-bit or 8-bit memory manipulation instruction.

Reset signal generation clears this register to 00H.

Figure 16-5. Format of DMA Operation Control Register n (DRCn)

Address: FFFBCH (DRC0), FFFBDH (DRC1) After reset: 00H R/W

Symbol	<7>	6	5	4	3	2	1	<0>
DRCn	DENn	0	0	0	0	0	0	DSTn

DENn	DMA operation enable flag
0	Disables operation of DMA channel n (stops operating cock of DMA).
1	Enables operation of DMA channel n.
DMAC waits for a DMA trigger when DSTn = 1 after DMA operation is enabled (DENn = 1).	

DSTn	DMA transfer mode flag
0	DMA transfer of DMA channel n is completed.
1	DMA transfer of DMA channel n is not completed (still under execution).
DMAC waits for a DMA trigger when DSTn = 1 after DMA operation is enabled (DENn = 1). When a software trigger (STGn) or the start source trigger set by IFCn3 to IFCn0 is input, DMA transfer is started. When DMA transfer is completed after that, this bit is automatically cleared to 0. Write 0 to this bit to forcibly terminate DMA transfer under execution.	

Cautions 1. The DSTn flag is automatically cleared to 0 when a DMA transfer is completed. Writing the DENn flag is enabled only when DSTn = 0. When a DMA transfer is terminated without waiting for generation of the interrupt (INTDMAn) of DMAn, therefore, set DSTn to 0 and then DENn to 0 (for details, refer to 16.5.5 Forced termination by software).

2. When the FSEL bit of the OSMC register has been set to 1, do not enable (DENn = 1) DMA operation for at least three clocks after the setting.

Remark n: DMA channel number (n = 0, 1)

16.4 Operation of DMA Controller

16.4.1 Operation procedure

<1> The DMA controller is enabled to operate when DENn = 1. Before writing the other registers, be sure to set DENn to 1. Use 80H to write with an 8-bit manipulation instruction.

<2> Set an SFR address, a RAM address, the number of times of transfer, and a transfer mode of DMA transfer to the DSAn, DRAn, CBCn, and DMCn registers.

<3> The DMA controller waits for a DMA trigger when DSTn = 1. Use 81H to write with an 8-bit manipulation instruction.

<4> When a software trigger (STGn) or a start source trigger specified by IFCn3 to IFCn0 is input, a DMA transfer is started.

<5> Transfer is completed when the number of times of transfer set by the DBCn register reaches 0, and transfer is automatically terminated by occurrence of an interrupt (INTDMAn).

<6> Stop the operation of the DMA controller by clearing DENn to 0 when the DMA controller is not used.

Figure 16-6. Operation Procedure

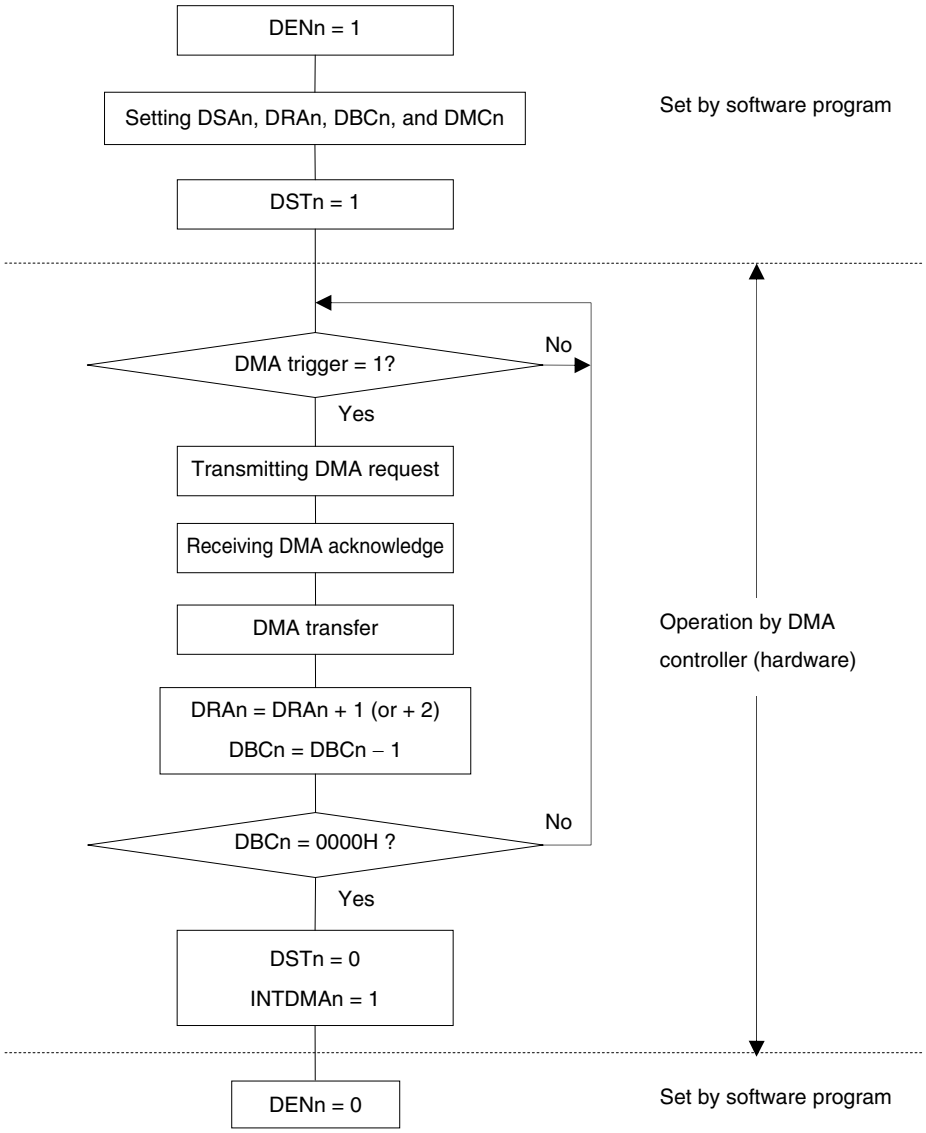

Remark n: DMA channel number (n = 0, 1)

16.4.2 Transfer mode

The following four modes can be selected for DMA transfer by using bits 6 and 5 (DRSn and DSn) of the DMCn register.

DRSn	DSn	DMA Transfer Mode
0	0	Transfer from SFR of 1-byte data (fixed address) to RAM (address is incremented by +1)
0	1	Transfer from SFR of 2-byte data (fixed address) to RAM (address is incremented by +2)
1	0	Transfer from RAM of 1-byte data (address is incremented by +1) to SFR (fixed address)
1	1	Transfer from RAM of 2-byte data (address is incremented by +2) to SFR (fixed address)

By using these transfer modes, up to 1024 bytes of data can be consecutively transferred by using the serial interface, data resulting from A/D conversion can be consecutively transferred, and port data can be scanned at fixed time intervals by using a timer.

16.4.3 Termination of DMA transfer

When DBCn = 00H and DMA transfer is completed, the DSTn bit is automatically cleared to 0. An interrupt request (INTDMAn) is generated and transfer is terminated.

When the DSTn bit is cleared to 0 to forcibly terminate DMA transfer, the DBCn and DRAn registers hold the value when transfer is terminated.

The interrupt request (INTDMAn) is not generated if transfer is forcibly terminated.

Remark n: DMA channel number (n = 0, 1)

16.5 Example of Setting of DMA Controller

16.5.1 CSI consecutive transmission

A flowchart showing an example of setting for CSI consecutive transmission is shown below.

- Consecutive transmission of CSI10
- DMA channel 0 is used for DMA transfer.
- DMA start source: INTCSI10 (software trigger (STG0) only for the first start source)
- Interrupt of CSI10 is specified by IFC03 to IFC00 (bits 3 to 0 of the DMC0 register) = 1000B.
- Transfers FFB00H to FFBFFH (256 bytes) of RAM to FFF44H of the transmit buffer (SIO10) of CSI.

Figure 16-7. Example of Setting for CSI Consecutive Transmission

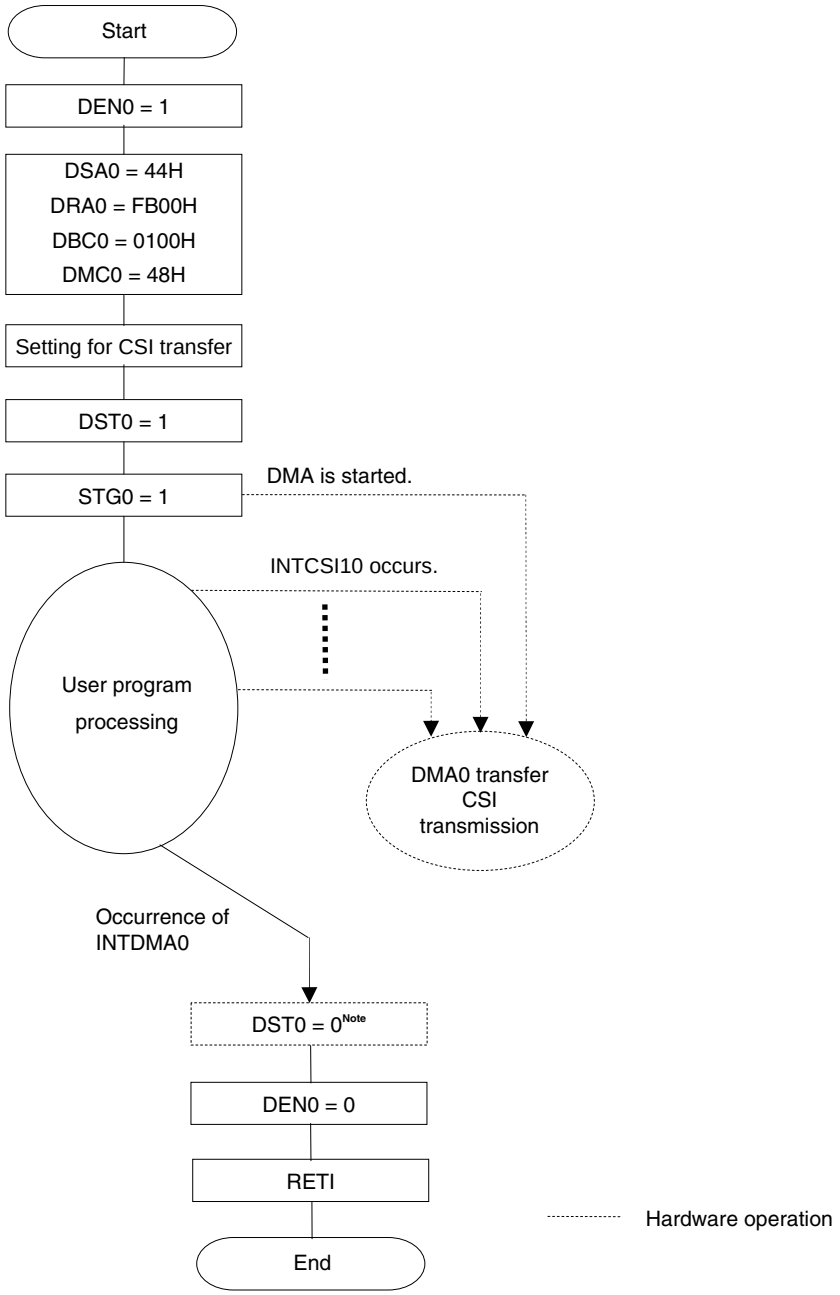

Note The DST0 flag is automatically cleared to 0 when a DMA transfer is completed.
Writing the DEN0 flag is enabled only when DST0 = 0. To terminate a DMA transfer without waiting for occurrence of the interrupt of DMA0 (INTDMA0), set DST0 to 0 and then DEN0 to 0 (for details, refer to **16.5.5 Forced termination by software**).

The fist trigger for consecutive transmission is not started by the interrupt of CSI. Start it by a software trigger.

CSI transmission of the second time and onward is automatically executed.

The DMA interrupt (INTDMA0) is generated as soon as the last data has been written to the transmit buffer. At this point, the last data of CSI is being transmitted. To start DMA transfer again, therefore, wait until transfer of CSI is completed.

16.5.2 Consecutive capturing of A/D conversion results

A flowchart of an example of setting for consecutively capturing A/D conversion results is shown below.

- Consecutive capturing of A/D conversion results.
- DMA channel 1 is used for DMA transfer.
- DMA start source: INTAD
- Interrupt of A/D is specified by IFC13 to IFC10 (bits 3 to 0 of the DMC1 register) = 1100B.
- Transfers FFF1EH and FFF1FH (2 bytes) of the 10-bit A/D conversion result register to 512 bytes of FFCE0H to FFEDFH of RAM.

Figure 16-8. Example of Setting of Consecutively Capturing A/D Conversion Results

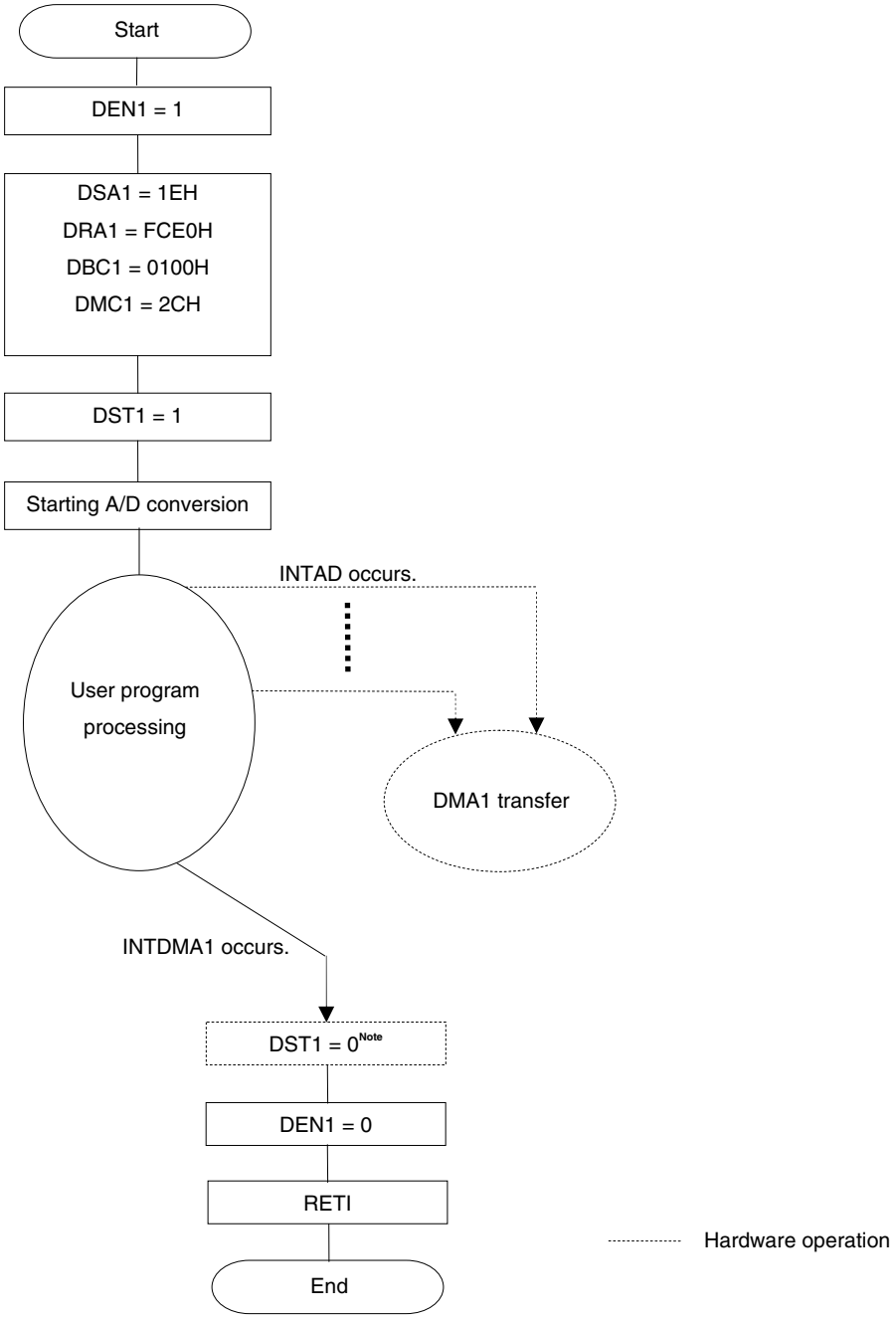

Note The DST1 flag is automatically cleared to 0 when a DMA transfer is completed.
Writing the DEN1 flag is enabled only when DST1 = 0. To terminate a DMA transfer without waiting for occurrence of the interrupt of DMA1 (INTDMA1), set DST1 to 0 and then DEN1 to 0 (for details, refer to **16.5.5 Forced termination by software**).

16.5.3 UART consecutive reception + ACK transmission

A flowchart illustrating an example of setting for UART consecutive reception + ACK transmission is shown below.

- Consecutively receives data from UART0 and outputs ACK to P10 on completion of reception.
- DMA channel 0 is used for DMA transfer.
- DMA start source: Software trigger (DMA transfer on occurrence of an interrupt is disabled.)
- Transfers FFF12H of UART receive data register 0 (RXD0) to 64 bytes of FFE00H to FFE3FH of RAM.

Figure 16-9. Example of Setting for UART Consecutive Reception + ACK Transmission

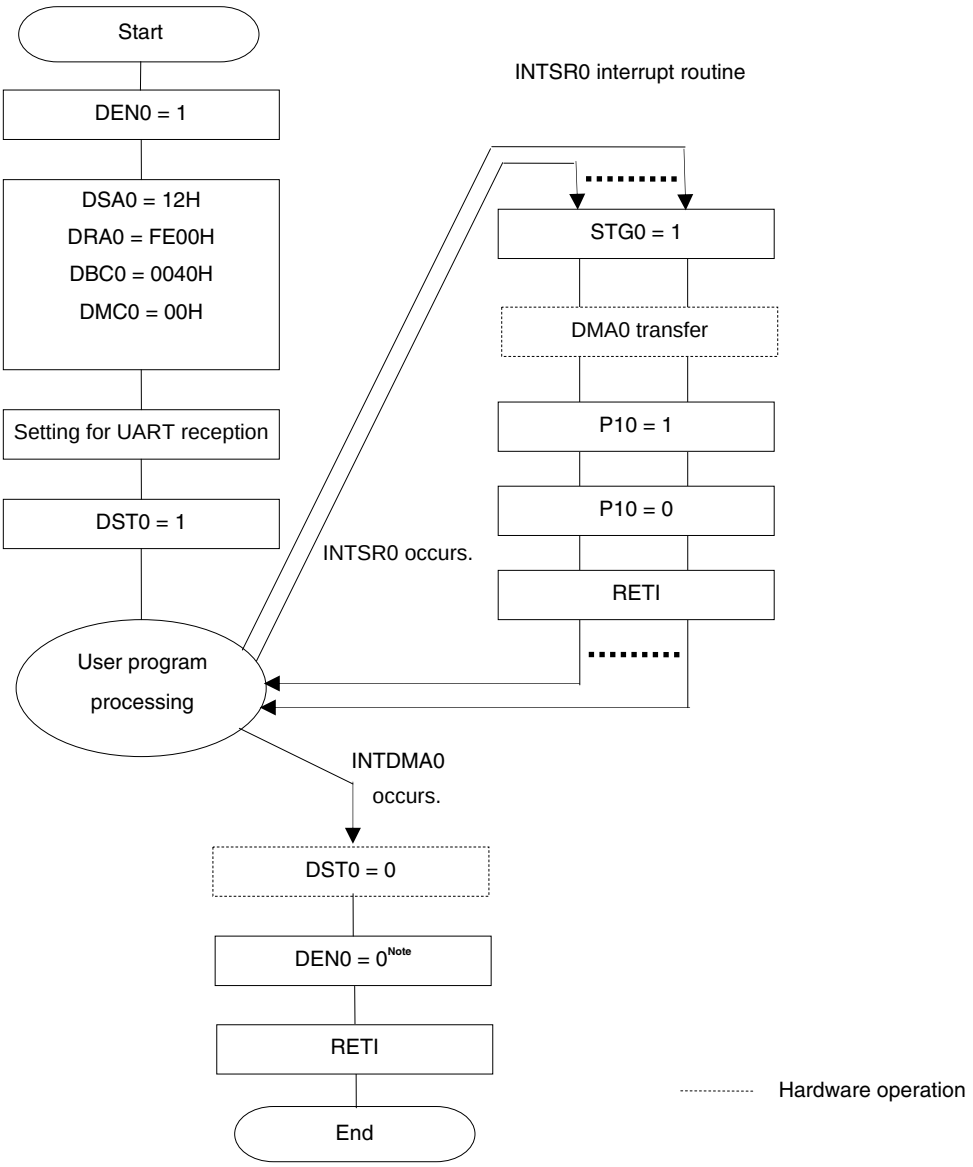

Note The DST0 flag is automatically cleared to 0 when a DMA transfer is completed.
Writing the DEN0 flag is enabled only when DST0 = 0. To terminate a DMA transfer without waiting for occurrence of the interrupt of DMA0 (INTDMA0), set DST0 to 0 and then DEN0 to 0 (for details, refer to **16.5.5 Forced termination by software**).

Remark This is an example where a software trigger is used as a DMA start source.
If ACK is not transmitted and if only data is consecutively received from UART, the UART reception end interrupt (INTSR0) can be used to start DMA for data reception.

16.5.4 Holding DMA transfer pending by DWAITn

When DMA transfer is started, transfer is performed while an instruction is executed. At this time, the operation of the CPU is stopped and delayed for the duration of 2 clocks. If this poses a problem to the operation of the set system, a DMA transfer can be held pending by setting DWAITn to 1.

To output a pulse with a width of 10 clocks of the operating frequency from the P10 pin, for example, the clock width increases to 12 if a DMA transfer is started midway. In this case, the DMA transfer can be held pending by setting DWAITn to 1.

After setting DWAITn to 1, it takes two clocks until a DMA transfer is held pending.

Figure 16-10. Example of Setting for Holding DMA Transfer Pending by DWAITn

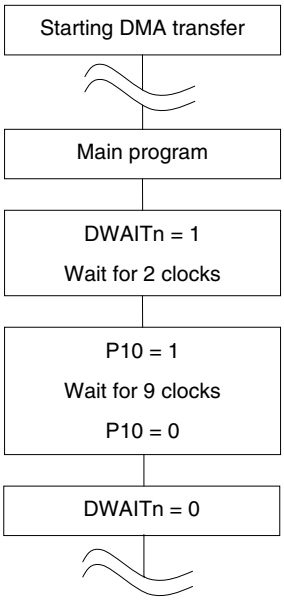

Caution When DMA transfer is held pending while using both DMA channels, be sure to held the DMA transfer pending for both channels (by setting DWAIT0 and DWAIT1 to 1). If the DMA transfer of one channel is executed while that of the other channel is held pending, DMA transfer might not be held pending for the latter channel.

Remarks 1. n: DMA channel number (n = 0, 1)

2. 1 clock: $1/f_{CLK}$ (f_{CLK}: CPU clock)

16.5.5 Forced termination by software

After DSTn is set to 0 by software, it takes up to 2 clocks until a DMA transfer is actually stopped and DSTn is set to 0. To forcibly terminate a DMA transfer by software without waiting for occurrence of the interrupt (INTDMAn) of DMAn, therefore, perform either of the following processes.

- Set DSTn to 0 (use DRCn = 80H to write with an 8-bit manipulation instruction) by software, confirm by polling that DSTn has actually been cleared to 0, and then set DENn to 0 (use DRCn = 00H to write with an 8-bit manipulation instruction).

- Set DSTn to 0 (use DRCn = 80H to write with an 8-bit manipulation instruction) by software and then set DENn to 0 (use DRCn = 00H to write with an 8-bit manipulation instruction) two or more clocks after.

- To forcibly terminate DMA transfer by software when using both DMA channels (by setting DSTn to 0), clear the DSTn bit to 0 after the DMA transfer is held pending by setting the DWAIT0 and DWAIT1 bits of both channels to 1. Next, clear the DWAIT0 and DWAIT1 bits of both channels to 0 to cancel the pending status, and then clear the DENn bit to 0.

Figure 16-11. Forced Termination of DMA Transfer (1/2)

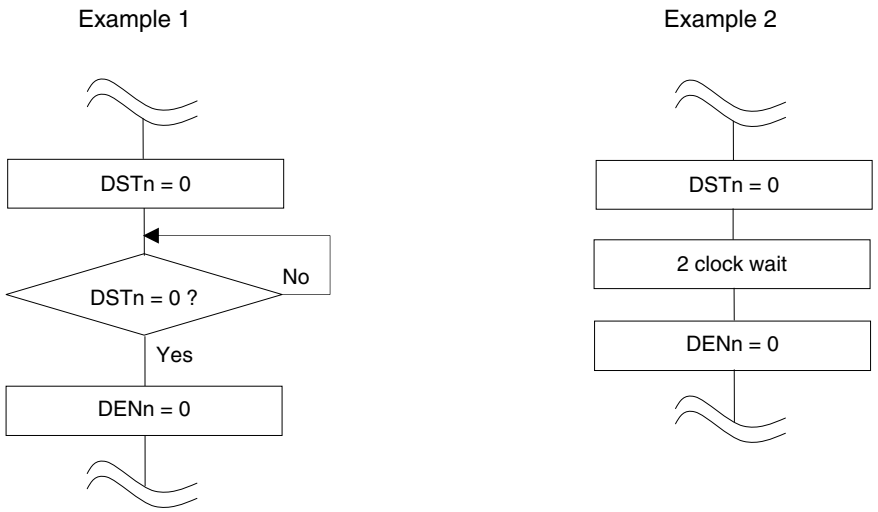

Remarks 1. n: DMA channel number (n = 0, 1)

2. 1 clock: 1/f_{CLK} (f_{CLK}: CPU clock)

Figure 16-11. Forced Termination of DMA Transfer (2/2)

Example 3

- Procedure for forcibly terminating the DMA transfer for one channel if both channels are used

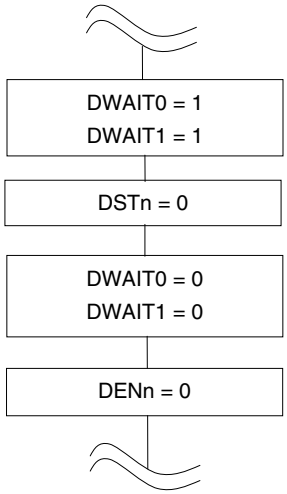

- Procedure for forcibly terminating the DMA transfer for both channels if both channels are used

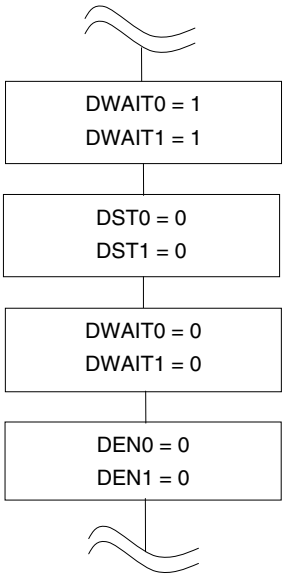

Caution **In example 3, the system is not required to wait two clock cycles after DWAITn is set to 1 and DSTn is cleared to 0.**

Remark n: DMA channel number (n = 0, 1)

16.6 Cautions on Using DMA Controller

(1) Priority of DMA

During DMA transfer, a request from the other DMA channel is held pending even if generated. The pending DMA transfer is started after the ongoing DMA transfer is completed. When the requests from either of the DMA channels are successively generated in a short period [Note], they are successively transferred, and on completion of that, the requests from the other DMA channel are executed. In this case, one or tow instructions are executed between the first DMA transfer and next DMA transfer.

If two DMA requests are generated at the same time, however, DMA channel 0 takes priority over DMA channel 1.

If a DMA request and an interrupt request are generated at the same time, the DMA transfer takes precedence, and then interrupt servicing is executed.

Note The short period refers to a period of eight or fewer CPU clocks. The relationship between the lengths of clock period and DMA operations is as follows.

1 clock period:	Setting disabled DMA request cannot be accepted.
2 to 4 clock period:	DMA transfer of the channel where requests are successively generated is executed.
5 to 8 clock period:	Whether DMA transfer of the channel where requests are successively generated is executed or DMA requests from the other channel are executed depends on the number of times CPU instructions are executed.

(2) DMA response time

The response time of DMA transfer is as follows.

Table 16-2. Response Time of DMA Transfer

	Minimum Time	Maximum Time
Response time	3 clocks	10 clocks[Note]

Note The maximum time necessary to execute an instruction from internal RAM is 16 clock cycles.

Cautions 1. The above response time does not include the two clock cycles required for a DMA transfer.

2. When executing a DMA pending instruction (see 16.6 (4)), the response time is extended by the execution time of the instruction to be held pending.

3. Do not specify successive transfer triggers for a channel within a period equal to the maximum response time plus one clock cycle, because they might be ignored.

Remark 1 clock: $1/f_{CLK}$ (f_{CLK}: CPU clock)

(3) Operation in standby mode

The DMA controller operates as follows in the standby mode.

Table 16-3. DMA Operation in Standby Mode

Status	DMA Operation
HALT mode	Normal operation
STOP mode	Stops operation. If DMA transfer and STOP instruction execution contend, DMA transfer may be damaged. Therefore, stop DMA before executing the STOP instruction.

(4) DMA pending instruction

Even if a DMA request is generated, DMA transfer is held pending immediately after the following instructions.

- CALL !addr16
- CALL &!addr16
- CALL !!addr20
- CALL rp
- CALLT [addr5]
- BRK
- Bit manipulation instructions for registers IF0L, IF0H, IF1L, IF1H, IF2L, IF2H, MK0L, MK0H, MK1L, MK1H, MK2L, MK2H, PR00L, PR00H, PR01L, PR01H, PR02L, PR02H, PR10L, PR10H, PR11L, PR11H, PR12L, PR12H and PSW each, and 8-bit manipulation instructions with operands including ES registers

(5) Operation if address in general-purpose register area or other than those of internal RAM area is specified

The address indicated by DRA0n is incremented during DMA transfer. If the address is incremented to an address in the general-purpose register area or exceeds the area of the internal RAM, the following operation is performed.

- In mode of transfer from SFR to RAM
  The data of that address is lost.

- In mode of transfer from RAM to SFR
  Undefined data is transferred to SFR.

In either case, malfunctioning may occur or damage may be done to the system. Therefore, make sure that the address is within the internal RAM area other than the general-purpose register area.

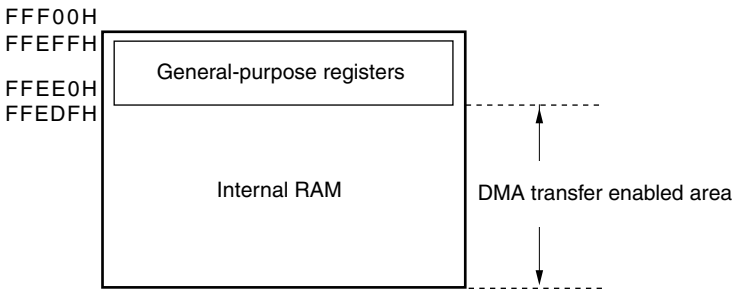

CHAPTER 17 INTERRUPT FUNCTIONS

The number of interrupt sources differs, depending on the product.

		78K0R/IB3	78K0R/IC3 (38-pin)	78K0R/IC3 (44-pin)	78K0R/IC3 (48-pin)	78K0R/ID3	78K0R/IE3
Maskable interrupts	Internal	6	8	8	8	8	8
	External	31	33	33	34	34	34

17.1 Interrupt Function Types

The following two types of interrupt functions are used.

(1) Maskable interrupts

These interrupts undergo mask control. Maskable interrupts can be divided into four priority groups by setting the priority specification flag registers (PR00L, PR00H, PR01L, PR01H, PR02L, PR02H, PR10L, PR10H, PR11L, PR11H, PR12L, PR12H).

Multiple interrupt servicing can be applied to low-priority interrupts when high-priority interrupts are generated. If two or more interrupt requests, each having the same priority, are simultaneously generated, then they are processed according to the priority of vectored interrupt servicing. For the priority order, see **Table 17-1**.

A standby release signal is generated and STOP and HALT modes are released.

External interrupt requests and internal interrupt requests are provided as maskable interrupts.

(2) Software interrupt

This is a vectored interrupt generated by executing the BRK instruction. It is acknowledged even when interrupts are disabled. The software interrupt does not undergo interrupt priority control.

17.2 Interrupt Sources and Configuration

The 78K0R/IE3 has a interrupt sources including maskable interrupts and software interrupts. In addition, they also have up to five reset sources (see **Table 17-1**). The vector codes that store the program start address when branching due to the generation of a reset or various interrupt requests are two bytes each, so interrupts jump to a 64 K address of 00000H to 0FFFFH.

Table 17-1. Interrupt Source List (1/3)

Interrupt Type	Default Priority Note 1	Interrupt Source		Internal/ External	Vector Table Address	Basic Con-figuration Type Note 2	IB3	IC3 (38-pin)	IC3 (44-pin)	IC3 (48-pin)	ID3	IE3
		Name	Trigger									
Maskable	0	INTWDTI	Watchdog timer interval Note 3 (75% of overflow time)	Internal	0004H	(A)	√	√	√	√	√	√
	1	INTLVI	Low-voltage detection Note 4		0006H		√	√	√	√	√	√
	2	INTP0	Pin input edge detection	External	0008H	(B)	√	√	√	√	√	√
	3	INTP1			000AH		√	√	√	√	√	√
	4	INTP2			000CH		√	√	√	√	√	√
	5	INTP3/ INTTMOFF0	Pin input edge detection/timer Hi-Z control interrupt 0		000EH		√	√	√	√	√	√
	6	INTP4	Pin input edge detection		0010H		√	√	√	√	√	√
	7	INTP5			0012H		√	√	√	√	√	√
	8	INTTMAD	A/D conversion timer trigger	Internal	0014H	(A)	√	√	√	√	√	√
	9	INTCMP0	CMP0 detection		0016H		√	√	√	√	√	√
	10	INTCMP1	CMP1 detection		0018H		√	√	√	√	√	√
	11	INTDMA0	End of DMA0 transfer		001AH		√	√	√	√	√	√
	12	INTDMA1	End of DMA1 transfer		001CH		√	√	√	√	√	√
	13	INTST0 /INTCSI00	UART0 transmission transfer end or buffer empty interrupt/CSI00 transfer end or buffer empty interrupt		001EH		√ Note 5	√ Note 5	√	√	√	√
	14	INTSR0 /INTCSI01	UART0 reception transfer end/ CSI01 transfer end or buffer empty interrupt		0020H		√ Note 5	√ Note 5	√	√	√	√
	15	INTSRE0	UART0 reception communication error occurrence		0022H		√	√	√	√	√	√
	16	INTST1 /INTCSI10 /INTIIC10	UART1 transmission transfer end or buffer empty interrupt/ CSI10 transfer end or buffer empty interrupt/ IIC10 transfer end		0024H		√	√	√	√	√	√

(**Note** is listed on the next page.)

Notes 1. The default priority determines the sequence of interrupts if two or more maskable interrupts, each having the same priority, occur simultaneously. Zero indicates the highest priority and 41 indicates the lowest priority.

2. Basic configuration types (A) to (C) correspond to (A) to (C) in Figure 17-1.

3. When bit 7 (WDTINT) of the option byte (000C0H) is set to 1.

4. When bit 1 (LVIMD) of the low-voltage detection register (LVIM) is cleared to 0.

5. INTST0 and INTSR0 only.

Table 17-1. Interrupt Source List (2/3)

Interrupt Type	Default Priority Note 1	Interrupt Source		Internal/ External	Vector Table Address	Basic Con-figuration Type Note 2	IB3	IC3 (38-pin)	IC3 (44-pin)	IC3 (48-pin)	ID3	IE3
		Name	Trigger									
Maskable	17	INTSR1	UART1 reception transfer end	Internal	0026H	(A)	√	√	√	√	√	√
	18	INTSRE1	UART1 communication error occurrence		0028H		√	√	√	√	√	√
	19	INTIICA	End of IICA communication		002AH		–	–	–	√	√	√
	20	INTTM00	End of timer channel 0 count or capture		002CH		√	√	√	√	√	√
	21	INTTM01	End of timer channel 1 count or capture		002EH		√	√	√	√	√	√
	22	INTTM02	End of timer channel 2 count or capture		0030H		√	√	√	√	√	√
	23	INTTM03	End of timer channel 3 count or capture		0032H		√	√	√	√	√	√
	24	INTAD	End of A/D conversion		0034H		√	√	√	√	√	√
	25	INTRTC	Fixed-cycle signal of real-time counter/alarm match detection		0036H		–	√	√	√	√	√
	26	INTRTCI	Interval signal detection of real-time counter		0038H		–	√	√	√	√	√
	27	INTTMM0	Timer array unit crest interrupt signal detection 0		003CH		√	√	√	√	√	√
	28	INTTMV0	Timer array unit valley interrupt signal detection 0		003EH		√	√	√	√	√	√
	29	INTMD	End of division operation		0040H		√	√	√	√	√	√
	30	INTTM04	End of timer channel 4 count or capture		0042H		√	√	√	√	√	√

Notes 1. The default priority determines the sequence of interrupts if two or more maskable interrupts, each having the same priority, occur simultaneously. Zero indicates the highest priority and 41 indicates the lowest priority.

2. Basic configuration types (A) to (C) correspond to (A) to (C) in Figure 17-1.

Table 17-1. Interrupt Source List (3/3)

Interrupt Type	Default Priority Note 1	Interrupt Source		Internal/ External	Vector Table Address	Basic Con-figuration Type Note 2	IB3	IC3 (38-pin)	IC3 (44-pin)	IC3 (48-pin)	ID3	IE3
		Name	Trigger									
Maskable	31	INTTM05	End of timer channel 5 count or capture	Internal	0044H	(A)	√	√	√	√	√	√
	32	INTTM06	End of timer channel 6 count or capture		0046H		√	√	√	√	√	√
	33	INTTM07	End of timer channel 7 count or capture		0048H		√	√	√	√	√	√
	34	INTP6	Pin input edge detection	External	004AH	(B)	–	√	√	√	√	√
	35	INTP7/ INTTMOFF1	Pin input edge detection/timer Hi-Z control interrupt 0		004CH		–	√	√	√	√	√
	36	INTTMM1	Timer array unit crest interrupt signal detection 1	Internal	004EH	(A)	√	√	√	√	√	√
	37	INTTMV1	Timer array unit valley interrupt signal detection 1		0050H		√	√	√	√	√	√
	38	INTTM08	End of timer channel 8 count or capture		0052H		√	√	√	√	√	√
	39	INTTM09	End of timer channel 9 count or capture		0054H		√	√	√	√	√	√
	40	INTTM10	End of timer channel 10 count or capture		0056H		√	√	√	√	√	√
	41	INTTM11	End of timer channel 11 count or capture		0058H		√	√	√	√	√	√
Software	–	BRK	Execution of BRK instruction	–	007EH	(C)	√	√	√	√	√	√
Reset	–	RESET	$\overline{\text{RESET}}$ pin input	–	0000H	–	√	√	√	√	√	√
		POC	Power-on-clear									
		LVI	Low-voltage detection Note 3									
		WDT	Overflow of watchdog timer									
		TRAP	Execution of illegal instruction Note 4									

Notes 1. The default priority determines the sequence of interrupts if two or more maskable interrupts, each having the same priority, occur simultaneously. Zero indicates the highest priority and 41 indicates the lowest priority.

2. Basic configuration types (A) to (C) correspond to (A) to (C) in Figure 17-1.

3. When bit 1 (LVIMD) of the low-voltage detection register (LVIM) is set to 1.

4. When the instruction code in FFH is executed.
Reset by the illegal instruction execution not issued by emulation with the in-circuit emulator or on-chip debug emulator.

Figure 17-1. Basic Configuration of Interrupt Function

(A) Internal maskable interrupt

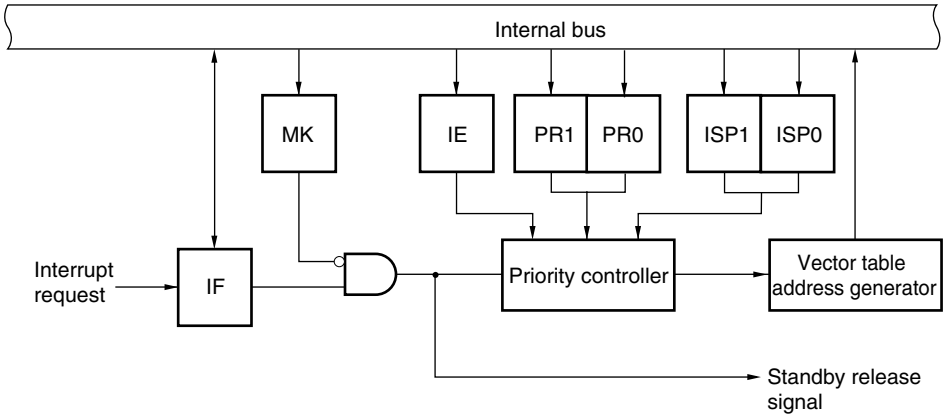

(B) External maskable interrupt (INTPn)

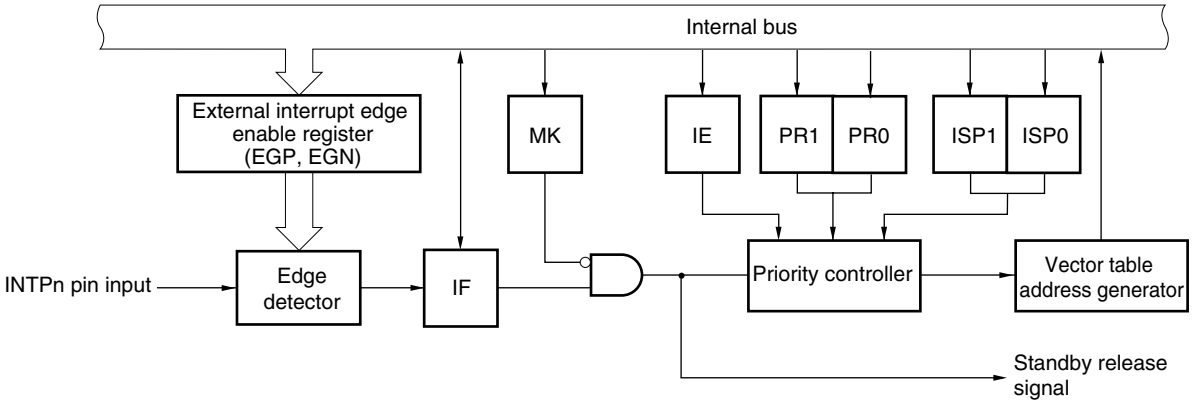

IF: Interrupt request flag
IE: Interrupt enable flag
ISP0: In-service priority flag 0
ISP1: In-service priority flag 1
MK: Interrupt mask flag
PR0: Priority specification flag 0
PR1: Priority specification flag 1

Remark n = 0 to 7

(C) Software interrupt

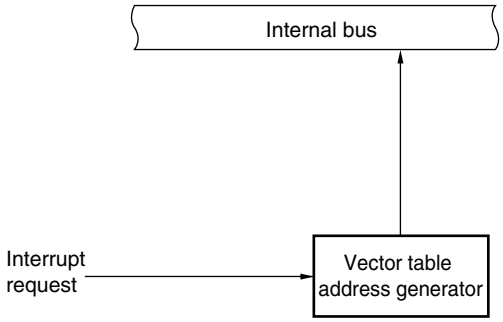

IF: Interrupt request flag
IE: Interrupt enable flag
ISP0: In-service priority flag 0
ISP1: In-service priority flag 1
MK: Interrupt mask flag
PR0: Priority specification flag 0
PR1: Priority specification flag 1

17.3 Registers Controlling Interrupt Functions

The following 6 types of registers are used to control the interrupt functions.

- Interrupt request flag registers (IF0L, IF0H, IF1L, IF1H, IF2L, IF2H)
- Interrupt mask flag registers (MK0L, MK0H, MK1L, MK1H, MK2L, MK2H)
- Priority specification flag registers (PR00L, PR00H, PR01L, PR01H, PR02L, PR02H, PR10L, PR10H, PR11L, PR11H, PR12L, PR12H)
- External interrupt rising edge enable register (EGP0)
- External interrupt falling edge enable register (EGN0)
- Program status word (PSW)

Table 17-2 shows a list of interrupt request flags, interrupt mask flags, and priority specification flags corresponding to interrupt request sources.

Table 17-2. Flags Corresponding to Interrupt Request Sources (1/3)

IB3	IC3 (38-pin)	IC3 (44-pin)	IC3 (48-pin)	ID3	IE3	Interrupt Request Flag	Interrupt Mask Flag	Register	Priority Specification Flag	Register	Interrupt Request Flag	Register
√	√	√	√	√	√	INTWDTI	WDTIIF	IF0L	WDTIMK	MK0L	WDTIPR0, WDTIPR1	PR00L, PR10L
√	√	√	√	√	√	INTLVI	LVIIF		LVIMK		LVIPR0, LVIPR1	
√	√	√	√	√	√	INTP0	PIF0		PMK0		PPR00, PPR10	
√	√	√	√	√	√	INTP1	PIF1		PMK1		PPR01, PPR11	
√	√	√	√	√	√	INTP2	PIF2		PMK2		PPR02, PPR12	
√	√	√	√	√	√	INTP3 Note 1, 2	PIF3 Note 1, 2		PMK3 Note 1, 2		PPR03, PPR13 Note 1, 2	
√	√	√	√	√	√	INTTMOFF0 Note 1, 2	TMOFFIF0 Note 1, 2		TMOFFMK0 Note 1, 2		TMOFFPR00, TMOFFPR10 Note 1, 2	
√	√	√	√	√	√	INTP4	PIF4		PMK4		PPR04, PPR14	
√	√	√	√	√	√	INTP5	PIF5		PMK5		PPR05, PPR15	
√	√	√	√	√	√	INTTMAD	TMADIF	IF0H	TMADMK	MK0H	TMADPR0, TMADPR1	PR00H, PR10H
√	√	√	√	√	√	INTCMP0	CMPIF0		CMPMK0		CMPPR00, CMPPR10	
√	√	√	√	√	√	INTCMP1	CMPIF1		CMPMK1		CMPPR01, CMPPR11	
√	√	√	√	√	√	INTDMA0	DMAIF0		DMAMK0		DMAPR00, DMAPR10	
√	√	√	√	√	√	INTDMA1	DMAIF1		DMAMK1		DMAPR01, DMAPR11	
√	√	√	√	√	√	INTST0 Note 3	STIF0 Note 3		STMK0 Note 3		STPR00, STPR10 Note 3	
–	–	√	√	√	√	INTCSI00 Note 3	CSIIF00 Note 3		CSIMK00 Note 3		CSIPR000, CSIPR100 Note 3	
√	√	√	√	√	√	INTSR0 Note 4	SRIF0 Note 4		SRMK0 Note 4		SRPR00, SRPR10 Note 4	
–	–	√	√	√	√	INTCSI01 Note 4	CSIIF01 Note 4		CSIMK01 Note 4		CSIPR001, CSIPR101 Note 4	
√	√	√	√	√	√	INTSRE0	SREIF0		SREMK0		SREPR00, SREPR10	

Notes 1. Do not use INTP3 and INTTMOFF0 at the same time because they share flags for the interrupt request sources. If one of the interrupt sources INTP3 and INTTMOFF0 is generated, bit 5 of IF0L is set to 1. Bit 5 of MK0L, PR00L, and PR10L supports these two interrupt sources.

2. The INTP3 pin is shared with the TMOFF0 pin. Therefore, when using the TMOFF0 pin, select the valid edges of INTP3 according to the valid edges of the TMOFF0 pin. (For details about selecting the valid edges of the INTP3 pin, see **17.3 (4) External interrupt rising edge enable register 0 (EGP0), external interrupt falling edge enable register 0 (EGN0)**. For details about selecting the valid edges of the TMOFF0 pin, see **7.3 (19) TAU option mode register (OPMR)**.). Also, when using INTP3, be sure to disable edge detection of the TMOFF0 input (by setting the HIE0 bit of the OPCR register to 0).

3. Do not use UART0 and CSI00 at the same time because they share flags for the interrupt request sources. If one of the interrupt sources INST0 and INTCSI00 is generated, bit 5 of IF0H is set to 1. Bit 5 of MK0H, PR00H, and PR10H supports these two interrupt sources.

4. Do not use UART0 and CSI01 at the same time because they share flags for the interrupt request sources. If one of the interrupt sources INSR0 and INTCSI01 is generated, bit 6 of IF0H is set to 1. Bit 6 of MK0H, PR00H, and PR10H supports these two interrupt sources.

Table 17-2. Flags Corresponding to Interrupt Request Sources (2/3)

IB3	IC3 (38-pin)	IC3 (44-pin)	IC3 (48-pin)	ID3	IE3	Interrupt Request Flag	Interrupt Mask Flag	Register	Priority Specification Flag	Register	Interrupt Request Flag	Register
√	√	√	√	√	√	INTST1 Note 1	STIF1 Note 1	IF1L	STMK1 Note 1	MK1L	STPR01, STPR11 Note 1	PR01L, PR11L
√	√	√	√	√	√	INTCSI10 Note 1	CSIIF10 Note 1		CSIMK10 Note 1		CSIPR010, CSIPR110 Note 1	
√	√	√	√	√	√	INTIIC10 Note 1	IICIF10 Note 1		IICMK10 Note 1		IICPR010, IICPR110 Note 1	
√	√	√	√	√	√	INTSR1	SRIF1		SRMK1		SRPR01, SRPR11	
√	√	√	√	√	√	INTSRE1	SREIF1		SREMK1		SREPR01, SREPR11	
–	–	–	√	√	√	INTIICA	IICAIF		IICAMK		IICAPR0, IICAPR1	
√	√	√	√	√	√	INTTM00	TMIF00		TMMK00		TMPR000, TMPR100	
√	√	√	√	√	√	INTTM01	TMIF01		TMMK01		TMPR001, TMPR101	
√	√	√	√	√	√	INTTM02	TMIF02		TMMK02		TMPR002, TMPR102	
√	√	√	√	√	√	INTTM03	TMIF03		TMMK03		TMPR003, TMPR103	
√	√	√	√	√	√	INTAD	ADIF	IF1H	ADMK	MK1H	ADPR0, ADPR1	PR01H, PR11H
–	√	√	√	√	√	INTRTC	RTCIF		RTCMK		RTCPR0, RTCPR1	
–	√	√	√	√	√	INTRTCI	RTCIIF		RTCIMK		RTCIPR0, RTCIPR1	
√	√	√	√	√	√	INTTMM0	TMMIF0		TMMMK0		TMMPR00, MMPR10	
√	√	√	√	√	√	INTTMV0	TMVIF0		TMVMK0		TMVPR00, TMVPR10	
√	√	√	√	√	√	INTMD	MDIF		MDMK		MDPR0, MDPR1	
√	√	√	√	√	√	INTTM04	TMIF04		TMMK04		TMPR004, TMPR104	
√	√	√	√	√	√	INTTM05	TMIF05	IF2L	TMMK05	MK2L	TMPR005, TMPR105	PR02L, PR12L
√	√	√	√	√	√	INTTM06	TMIF06		TMMK06		TMPR006, TMPR106	
√	√	√	√	√	√	INTTM07	TMIF07		TMMK07		TMPR007, TMPR107	
–	√	√	√	√	√	INTP6	PIF6		PMK6		PPR06, PPR16	
–	√	√	√	√	√	INTP7 Note 2, 3	PIF7 Note 2, 3		PMK7 Note 2, 3		PPR07, PPR17 Note 2, 3	
–	√	√	√	√	√	INTTMOFF1 Note 2, 3	TMOFFIF1 Note 2, 3		TMOFFMK1 Note 2, 3		TMOFFPR01, TMOFFPR11 Note 2, 3	
√	√	√	√	√	√	INTTMM1	TMMIF1		TMMMK1		TMMPR01, MMPR11	
√	√	√	√	√	√	INTTMV1	TMVIF1		TMVMK1		TMVPR01, TMVPR11	
√	√	√	√	√	√	INTTM08	TMIF08		TMMK08		TMPR008, TMPR108	

Notes 1. Do not use UART1, CSI10, and IIC10 at the same time because they share flags for the interrupt request sources. If one of the interrupt sources INTST1, INTCSI10, and INTIIC10 is generated, bit 0 of IF1L is set to 1. Bit 0 of MK1L, PR01L, and PR11L supports these three interrupt sources.

2. Do not use INTP7 and INTTMOFF1 at the same time because they share flags for the interrupt request sources. If one of the interrupt sources INTP7 and INTTMOFF1 is generated, bit 4 of IF2L is set to 1. Bit 4 of MK2L, PR02L, and PR12L supports these two interrupt sources.

(**Note 3** is listed on the next page.)

3. The INTP7 pin is shared with the TMOFF1 pin. Therefore, when using the TMOFF1 pin, select the valid edges of INTP7 according to the valid edges of the TMOFF1 pin. (For details about selecting the valid edges of the INTP7 pin, see **17.3 (4) External interrupt rising edge enable register 0 (EGP0), external interrupt falling edge enable register 0 (EGN0)**. For details about selecting the valid edges of the TMOFF1 pin, see **7.3 (19) TAU option mode register (OPMR)**.). Also, when using INTP7, be sure to disable edge detection of the TMOFF1 input (by setting the HIE1 bit of the OPCR register to 0).

Table 17-2. Flags Corresponding to Interrupt Request Sources (3/3)

IB3	IC3 (38-pin)	IC3 (44-pin)	IC3 (48-pin)	ID3	IE3	Interrupt Request Flag	Interrupt Mask Flag	Register	Priority Specification Flag	Register	Interrupt Request Flag	Register
√	√	√	√	√	√	INTTM09	TMIF09	IF2H	TMMK09	MK2H	TMPR009, TMPR109	PR02H, PR12H
√	√	√	√	√	√	INTTM10	TMIF10		TMMK10		TMPR010, TMPR110	
√	√	√	√	√	√	INTTM11	TMIF11		TMMK11		TMPR011, TMPR111	

(1) Interrupt request flag registers (IF0L, IF0H, IF1L, IF1H, IF2L, IF2H)

The interrupt request flags are set to 1 when the corresponding interrupt request is generated or an instruction is executed. They are cleared to 0 when an instruction is executed upon acknowledgment of an interrupt request or upon reset signal generation.

When an interrupt is acknowledged, the interrupt request flag is automatically cleared and then the interrupt routine is entered.

IF0L, IF0H, IF1L, IF1H, IF2L, and IF2H can be set by a 1-bit or 8-bit memory manipulation instruction. When IF0L and IF0H, IF1L and IF1H, and IF2L and IF2H are combined to form 16-bit registers IF0, IF1, and IF2, they can be set by a 16-bit memory manipulation instruction.

Reset signal generation clears these registers to 00H.

Remark If an instruction that writes data to this register is executed, the number of instruction execution clocks increases by 2 clocks.

Figure 17-2. Format of Interrupt Request Flag Registers (IF0L, IF0H, IF1L, IF1H, IF2L, IF2H) (1/2)

Address: FFFE0H After reset: 00H R/W

Symbol	<7>	<6>	<5>	<4>	<3>	<2>	<1>	<0>
IF0L	PIF5	PIF4	PIF3 TMOFFIF0	PIF2	PIF1	PIF0	LVIIF	WDTIIF

Address: FFFE1H After reset: 00H R/W

Symbol	<7>	<6>	<5>	<4>	<3>	<2>	<1>	<0>
IF0H	SREIF0	SRIF0 CSIIF01 Note 1	STIF0 CSIIF00 Note 1	DMAIF1	DMAIF0	CMPIF1	CMPIF0	TMADIF

Address: FFFE2H After reset: 00H R/W

Symbol	<7>	<6>	<5>	<4>	<3>	<2>	<1>	<0>
IF1L	TMIF03	TMIF02	TMIF01	TMIF00	IICAIF Note 2	SREIF1	SRIF1	STIF1 CSIIF10 IICIF10

Address: FFFE3H After reset: 00H R/W

Symbol	<7>	<6>	<5>	<4>	3	<2>	<1>	<0>
IF1H	TMIF04	MDIF	TMVIF0	TMMIF0	0	RTCIIF Note 3	RTCIF Note 3	ADIF

Address: FFFD0H After reset: 00H R/W

Symbol	<7>	<6>	<5>	<4>	<3>	<2>	<1>	<0>
IF2L	TMIF08	TMVIF1	TMMIF1	PIF7 Note 3 TMOFFIF1 Note 3	PIF6 Note 3	TMIF07	TMIF06	TMIF05

(**Note** and **Caution** are listed on the next page.)

Figure 17-2. Format of Interrupt Request Flag Registers (IF0L, IF0H, IF1L, IF1H, IF2L, IF2H) (2/2)

Address: FFFD1H After reset: 00H R/W

Symbol	7	6	5	4	3	<2>	<1>	<0>
IF2H	0	0	0	0	0	TMIF11	TMIF10	TMIF09

XXIFX	Interrupt request flag
0	No interrupt request signal is generated
1	Interrupt request is generated, interrupt request status

Notes 1. CSIIF01 and CSIIF00 bits are not provided in the 78K0R/IB3 and the 38-pin products of the 78K0R/IC3.

2. IICAIF bit is not provided in the 78K0R/IB3 and the 38-pin and 44-pin products of the 78K0R/IC3. In these products, be sure to set bit 3 of the IF1L register to 0.

3. Those bits are not provided in the 78K0R/IB3. In the case of 78K0R/IB3, be sure to set bits 1 and 2 of the IF1H register, and bits 3 and 4 of the IF2L register to 0.

Cautions 1. Be sure to clear the following bits to 0.

78K0R/IB3 : Bit 3 of IF1L, Bits 1 to 3 of IF1H, Bits 3 and 4 of IF2L, and Bits 3 to 7 of IF2H

38-pin and 44-pin products of 78K0R/IC3 : Bit 3 of IF1L, Bit 3 of IF1H, and Bits 3 to 7 of IF2H

48-pin products of 78K0R/IC3, 78K0R/ID3, 78K0R/IE3 : Bit 3 of IF1H and Bits 3 to 7 of IF2H

2. When operating a timer, serial interface, or A/D converter after standby release, operate it once after clearing the interrupt request flag. An interrupt request flag may be set by noise.

3. When manipulating a flag of the interrupt request flag register, use a 1-bit memory manipulation instruction (CLR1). When describing in C language, use a bit manipulation instruction such as "IF0L.0 = 0;" or "_asm("clr1 IF0L, 0");" because the compiled assembler must be a 1-bit memory manipulation instruction (CLR1).

If a program is described in C language using an 8-bit memory manipulation instruction such as "IF0L &= 0xfe;" and compiled, it becomes the assembler of three instructions.

```
mov a, IF0L
and a, #0FEH
mov IF0L, a
```

In this case, even if the request flag of another bit of the same interrupt request flag register (IF0L) is set to 1 at the timing between "mov a, IF0L" and "mov IF0L, a", the flag is cleared to 0 at "mov IF0L, a". Therefore, care must be exercised when using an 8-bit memory manipulation instruction in C language.

(2) Interrupt mask flag registers (MK0L, MK0H, MK1L, MK1H, MK2L, MK2H)

The interrupt mask flags are used to enable/disable the corresponding maskable interrupt servicing.

MK0L, MK0H, MK1L, MK1H, MK2L, and MK2H can be set by a 1-bit or 8-bit memory manipulation instruction. When MK0L and MK0H, MK1L and MK1H, and MK2L and MK2H are combined to form 16-bit registers MK0, MK1, and MK2, they can be set by a 16-bit memory manipulation instruction.

Reset signal generation sets these registers to FFH.

Remark If an instruction that writes data to this register is executed, the number of instruction execution clocks increases by 2 clocks.

Figure 17-3. Format of Interrupt Mask Flag Registers (MK0L, MK0H, MK1L, MK1H, MK2L, MK2H)

Address: FFFE4H After reset: FFH R/W

Symbol	<7>	<6>	<5>	<4>	<3>	<2>	<1>	<0>
MK0L	PMK5	PMK4	PMK3 TMOFFMK0	PMK2	PMK1	PMK0	LVIMK	WDTIMK

Address: FFFE5H After reset: FFH R/W

Symbol	<7>	<6>	<5>	<4>	<3>	<2>	<1>	<0>
MK0H	SREMK0	SRMK0 CSIMK01 Note 1	STMK0 CSIMK00 Note 1	DMAMK1	DMAMK0	CMPMK1	CMPMK0	TMADMK

Address: FFFE6H After reset: FFH R/W

Symbol	<7>	<6>	<5>	<4>	<3>	<2>	<1>	<0>
MK1L	TMMK03	TMMK02	TMMK01	TMMK00	IICAMK Note 2	SREMK1	SRMK1	STMK1 CSIMK10 IICMK10

Address: FFFE7H After reset: FFH R/W

Symbol	<7>	<6>	<5>	<4>	3	<2>	<1>	<0>
MK1H	TMMK04	MDMK	TMVMK0	TMMMK0	1	RTCIMK Note 3	RTCMK Note 3	ADMK

Address: FFFD4H After reset: FFH R/W

Symbol	<7>	<6>	<5>	<4>	<3>	<2>	<1>	<0>
MK2L	TMMK08	TMVMK1	TMMMK1	PMK7 Note 3 TMOFFMK1 Note 3	PMK6 Note 3	TMMK07	TMMK06	TMMK05

Address: FFFD5H After reset: FFH R/W

Symbol	7	6	5	4	3	<2>	<1>	<0>
MK2H	1	1	1	1	1	TMMK11	TMMK10	TMMK09

XXMKX	Interrupt servicing control
0	Interrupt servicing enabled
1	Interrupt servicing disabled

Notes 1. CSIMK01 and CSIMK00 bits are not provided in the 78K0R/IB3 and the 38-pin products of the 78K0R/IC3.

2. IICAMK bit is not provided in the 78K0R/IB3 and the 38-pin and 44-pin products of the 78K0R/IC3. In these products, be sure to set bit 3 of the MK1L register to 0.

3. Those bits are not provided in the 78K0R/IB3. In the case of the 78K0R/IB3, be sure to set bits 1 and 2 of the MK1H register, and bits 3 and 4 of the MK2L register to 0.

Cautions 1. Be sure to clear the following bits to 0.

78K0R/IB3 : Bit 3 of MK1L, Bits 1 to 3 of MK1H, Bits 3 and 4 of MK2L, and Bits 3 to 7 of MK2H

38-pin and 44-pin products of 78K0R/IC3 : Bit 3 of MK1L, Bit 3 of MK1H, and Bits 3 to 7 of MK2H

48-pin products of 78K0R/IC3, 78K0R/ID3, 78K0R/IE3 : Bit 3 of MK1H and Bits 3 to 7 of MK2H

(3) Priority specification flag registers (PR00L, PR00H, PR01L, PR01H, PR02L, PR02H, PR10L, PR10H, PR11L, PR11H, PR12L, PR12H)

The priority specification flag registers are used to set the corresponding maskable interrupt priority level.
A priority level is set by using the PR0xy and PR1xy registers in combination (xy = 0L, 0H, 1L, 1H, 2L, or 2H).
PR00L, PR00H, PR01L, PR01H, PR02L, PR02H, PR10L, PR10H, PR11L, PR11H, PR12L, and PR12H can be set by a 1-bit or 8-bit memory manipulation instruction. If PR00L and PR00H, PR01L and PR01H, PR02L and PR02H, PR10L and PR10H, PR11L and PR11H, and PR12L and PR12H are combined to form 16-bit registers PR00, PR01, PR02, PR10, PR11, and PR12, they can be set by a 16-bit memory manipulation instruction.
Reset signal generation sets these registers to FFH.

Remark If an instruction that writes data to this register is executed, the number of instruction execution clocks increases by 2 clocks.

Figure 17-4. Format of Priority Specification Flag Registers (PR00L, PR00H, PR01L, PR01H, PR02L, PR02H, PR10L, PR10H, PR11L, PR11H, PR12L, PR12H) (1/3)

Address: FFFE8H After reset: FFH R/W

Symbol	<7>	<6>	<5>	<4>	<3>	<2>	<1>	<0>
PR00L	PPR05	PPR04	PPR03 TMOFFPR00	PPR02	PPR01	PPR00	LVIPR0	WDTIPR0

Address: FFFECH After reset: FFH R/W

Symbol	<7>	<6>	<5>	<4>	<3>	<2>	<1>	<0>
PR10L	PPR15	PPR14	PPR13 TMOFFPR10	PPR12	PPR11	PPR10	LVIPR1	WDTIPR1

Address: FFFE9H After reset: FFH R/W

Symbol	<7>	<6>	<5>	<4>	<3>	<2>	<1>	<0>
PR00H	SREPR00	SRPR00 CSIPR001[Note 1]	STPR00 CSIPR000[Note 1]	DMAPR01	DMAPR00	CMPPR01	CMPPR00	TMADPR0

Address: FFFEDH After reset: FFH R/W

Symbol	<7>	<6>	<5>	<4>	<3>	<2>	<1>	<0>
PR10H	SREPR10	SRPR10 CSIPR101[Note 1]	STPR10 CSIPR100[Note 1]	DMAPR11	DMAPR10	CMPPR11	CMPPR10	TMADPR1

(**Note** is listed on the next page after next.)

Figure 17-4. Format of Priority Specification Flag Registers
(PR00L, PR00H, PR01L, PR01H, PR02L, PR02H, PR10L, PR10H, PR11L, PR11H, PR12L, PR12H) (2/3)

Address: FFFEAH After reset: FFH R/W

Symbol	<7>	<6>	<5>	<4>	<3>	<2>	<1>	<0>
PR01L	TMPR003	TMPR002	TMPR001	TMPR000	IICAPR0 Note 2	SREPR01	SRPR01	STPR01 CSIPR010 IICPR010

Address: FFFEEH After reset: FFH R/W

Symbol	<7>	<6>	<5>	<4>	<3>	<2>	<1>	<0>
PR11L	TMPR103	TMPR102	TMPR101	TMPR100	IICAPR1 Note 2	SREPR11	SRPR11	STPR11 CSIPR110 IICPR110

Address: FFFEBH After reset: FFH R/W

Symbol	<7>	<6>	<5>	<4>	3	<2>	<1>	<0>
PR01H	TMPR004	MDPR0	TMVPR00	TMMPR00	1	RTCIPR0 Note 3	RTCPR0 Note 3	ADPR0

Address: FFFEFH After reset: FFH R/W

Symbol	<7>	<6>	<5>	<4>	3	<2>	<1>	<0>
PR11H	TMPR104	MDPR1	TMVPR10	TMMPR10	1	RTCIPR1 Note 3	RTCPR1 Note 3	ADPR1

Address: FFFD8H After reset: FFH R/W

Symbol	<7>	<6>	<5>	<4>	<3>	<2>	<1>	<0>
PR02L	TMPR008	TMVPR01	TMMPR01	PPR07 Note 3 TMOFFPR01 Note 3	PPR06 Note 3	TMPR007	TMPR006	TMPR005

Address: FFFDCH After reset: FFH R/W

Symbol	<7>	<6>	<5>	<4>	<3>	<2>	<1>	<0>
PR12L	TMPR108	TMVPR11	TMMPR11	PPR17 Note 3 TMOFFPR11 Note 3	PPR16 Note 3	TMPR107	TMPR106	TMPR105

Address: FFFD9H After reset: FFH R/W

Symbol	7	6	5	4	3	<2>	<1>	<0>
PR02H	1	1	1	1	1	TMPR011	TMPR010	TMPR009

Address: FFFDDH After reset: FFH R/W

Symbol	7	6	5	4	3	<2>	<1>	<0>
PR12H	1	1	1	1	1	TMPR111	TMPR110	TMPR109

(**Note** and **Remark** are listed on the next page.)

Figure 17-4. Format of Priority Specification Flag Registers (PR00L, PR00H, PR01L, PR01H, PR02L, PR02H, PR10L, PR10H, PR11L, PR11H, PR12L, PR12H) (3/3)

XXPR1X	XXPR0X	Priority level selection
0	0	Specify level 0 (high priority level)
0	1	Specify level 1
1	0	Specify level 2
1	1	Specify level 3 (low priority level)

Notes 1. Those bits are not provided in the 78K0R/IB3 and the 38-pin products of the 78K0R/IC3. In these products, be sure to set bits 5 and 6 of the PR00H and PR10H1 registers to 0.

2. IICAPR0 and IICAPR1 bits are not provided in the 78K0R/IB3 and the 38-pin and 44-pin products of the 78K0R/IC3. In these products, be sure to set bit 3 of the PR01L and PR11L registers to 0.

3. Those bits are not provided in the 78K0R/IB3. In the case of the 78K0R/IB3, be sure to set bits 1 and 2 of the PR01H and PR11H registers, and bits 3 and 4 of the PR02L and PR12L registers to 0.

Caution Be sure to clear the following bits to 0.

78K0R/IB3 : Bit 3 of PR01L and PR11L, Bits 1 to 3 of PR01H and PR11H, Bits 3 and 4 of PR02L and PR12L, and Bits 3 to 7 of PR02H and PR12H

38-pin and 44-pin products of 78K0R/IC3 : Bit 3 of PR01L and PR11L, Bit 3 of PR01H and PR11H, and Bits 3 to 7 of PR02H and PR12H

48-pin products of 78K0R/IC3, 78K0R/ID3, 78K0R/IE3 : Bit 3 of PR01H and PR11H, and Bits 3 to 7 of PR02H and PR12H

(4) External interrupt rising edge enable register 0 (EGP0), external interrupt falling edge enable register 0 (EGN0)

These registers specify the valid edge for INTPn.

EGP0 and EGN0 can be set by a 1-bit or 8-bit memory manipulation instruction.

Reset signal generation clears these registers to 00H.

Figure 17-5. Format of External Interrupt Rising Edge Enable Register 0 (EGP0) and External Interrupt Falling Edge Enable Register 0 (EGN0)

Address: FFF38H After reset: 00H R/W

Symbol	7	6	5	4	3	2	1	0
EGP0	EGP7 Note	EGP6 Note	EGP5	EGP4	EGP3	EGP2	EGP1	EGP0

Address: FFF39H After reset: 00H R/W

Symbol	7	6	5	4	3	2	1	0
EGN0	EGN7 Note	EGN6 Note	EGN5	EGN4	EGN3	EGN2	EGN1	EGN0

EGPn	EGNn	INTPn pin valid edge selection (n = 0 to 7)
0	0	Edge detection disabled
0	1	Falling edge
1	0	Rising edge
1	1	Both rising and falling edges

Note EGN6 and EGN7 bits are not provided in the 78K0R/IB3. In the 78K0R/IB3, bits 6 and 7 of those registers are fixed to 0.

Remark n = 0 to 5: 78K0R/IB3
n = 0 to 7: 78K0R/IC3, 78K0R/ID3, 78K0R/IE3

Table 17-3 shows the ports corresponding to EGPn and EGNn.

Table 17-3. Ports Corresponding to EGPn and EGNn

Detection Enable Bit		Edge Detection Port	Interrupt Request Signal
EGP0	EGN0	P120	INTP0
EGP1	EGN1	P31	INTP1
EGP2	EGN2	P32	INTP2
EGP3	EGN3	P80	INTP3[Note 1]
EGP4	EGN4	<44-pin and 48-pin products of 78K0R/IC3, 78K0R/ID3, 78K0R/IE3> P70 <78K0R/IB3, 38-pin products of 78K0R/IC3> P121	INTP4
EGP5	EGN5	<44-pin and 48-pin products of 78K0R/IC3, 78K0R/ID3, 78K0R/IE3> P71 <78K0R/IB3, 38-pin products of 78K0R/IC3> P122	INTP5
EGP6[Note 2]	EGN6	P72	INTP6
EGP7[Note 2]	EGN7	P82	INTP7[Note 1]

Notes 1. The INTP3 and INTP7 pins are shared with the TMOFF0 and TMOFF1 pins, respectively. Therefore, when using the TMOFF0 and TMOFF1 pins, select the valid edges of INTP3 and INTP7 according to the valid edges of the TMOFF0 and TMOFF1 pins. (For details about selecting the valid edges of the TMOFF0 and TMOFF1 pins, see **7.3 (19) TAU option mode register (OPMR)**.)

2. EGP6 and EGP7 bits are not provided in the 78K0R/IB3.

Caution Select the port mode by clearing EGPn and EGNn to 0 because an edge may be detected when the external interrupt function is switched to the port function.

Remark n = 0 to 5: 78K0R/IB3
n = 0 to 7: 78K0R/IC3, 78K0R/ID3, 78K0R/IE3

(5) Program status word (PSW)

The program status word is a register used to hold the instruction execution result and the current status for an interrupt request. The IE flag that sets maskable interrupt enable/disable and the ISP0 and ISP1 flags that controls multiple interrupt servicing are mapped to the PSW.

Besides 8-bit read/write, this register can carry out operations using bit manipulation instructions and dedicated instructions (EI and DI). When a vectored interrupt request is acknowledged, if the BRK instruction is executed, the contents of the PSW are automatically saved into a stack and the IE flag is reset to 0. If a maskable interrupt request is acknowledged, the contents of the priority specification flag of the acknowledged interrupt are transferred to the ISP0 and ISP1 flags. The PSW contents are also saved into the stack with the PUSH PSW instruction. They are restored from the stack with the RETI, RETB, and POP PSW instructions.

Reset signal generation sets PSW to 06H.

Figure 17-6. Configuration of Program Status Word

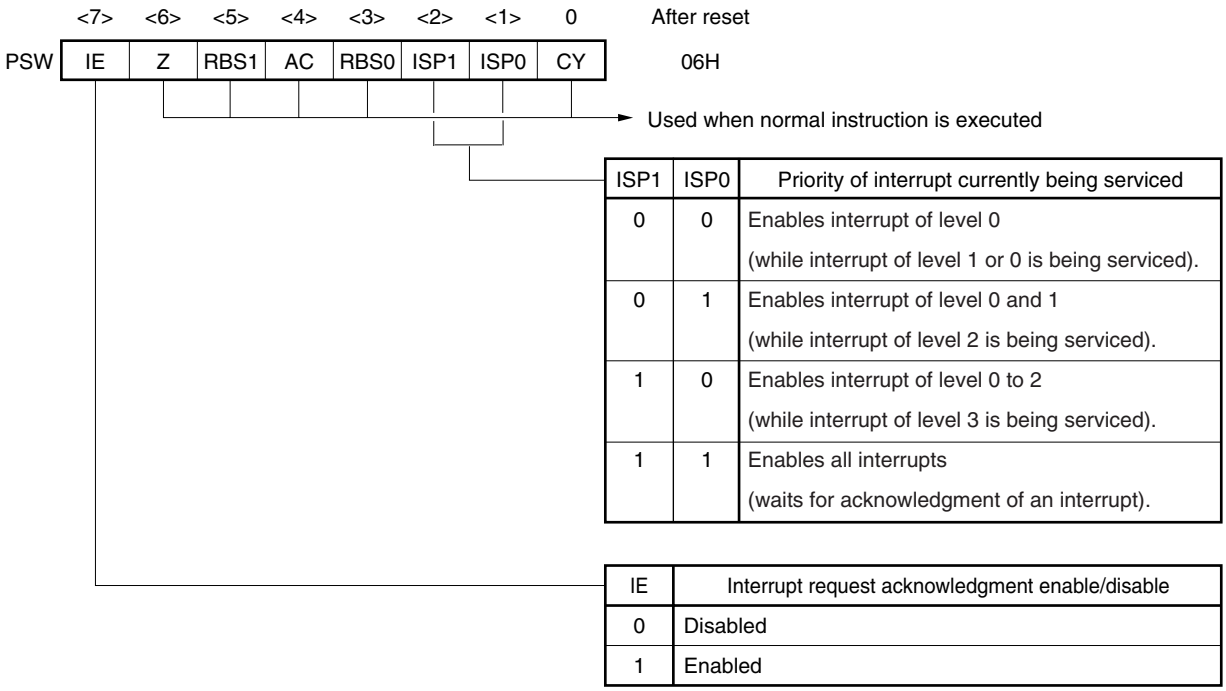

ISP1	ISP0	Priority of interrupt currently being serviced
0	0	Enables interrupt of level 0 (while interrupt of level 1 or 0 is being serviced).
0	1	Enables interrupt of level 0 and 1 (while interrupt of level 2 is being serviced).
1	0	Enables interrupt of level 0 to 2 (while interrupt of level 3 is being serviced).
1	1	Enables all interrupts (waits for acknowledgment of an interrupt).

IE	Interrupt request acknowledgment enable/disable
0	Disabled
1	Enabled

17.4 Interrupt Servicing Operations

17.4.1 Maskable interrupt acknowledgment

A maskable interrupt becomes acknowledgeable when the interrupt request flag is set to 1 and the mask (MK) flag corresponding to that interrupt request is cleared to 0. A vectored interrupt request is acknowledged if interrupts are in the interrupt enabled state (when the IE flag is set to 1). However, a low-priority interrupt request is not acknowledged during servicing of a higher priority interrupt request.

The times from generation of a maskable interrupt request until vectored interrupt servicing is performed are listed in Table 17-4 below.

For the interrupt request acknowledgment timing, see **Figures 17-8** and **17-9**.

Table 17-4. Time from Generation of Maskable Interrupt Until Servicing

	Minimum Time	Maximum Time[Note]
Servicing time	9 clocks	14 clocks

Note If an interrupt request is generated just before the RET instruction, the wait time becomes longer.

Remark 1 clock: $1/f_{CLK}$ (f_{CLK}: CPU clock)

If two or more maskable interrupt requests are generated simultaneously, the request with a higher priority level specified in the priority specification flag is acknowledged first. If two or more interrupts requests have the same priority level, the request with the highest default priority is acknowledged first.

An interrupt request that is held pending is acknowledged when it becomes acknowledgeable.

Figure 17-7 shows the interrupt request acknowledgment algorithm.

If a maskable interrupt request is acknowledged, the contents are saved into the stacks in the order of PSW, then PC, the IE flag is reset (0), and the contents of the priority specification flag corresponding to the acknowledged interrupt are transferred to the ISP1 and ISP0 flags. The vector table data determined for each interrupt request is the loaded into the PC and branched.

Restoring from an interrupt is possible by using the RETI instruction.

Figure 17-7. Interrupt Request Acknowledgment Processing Algorithm

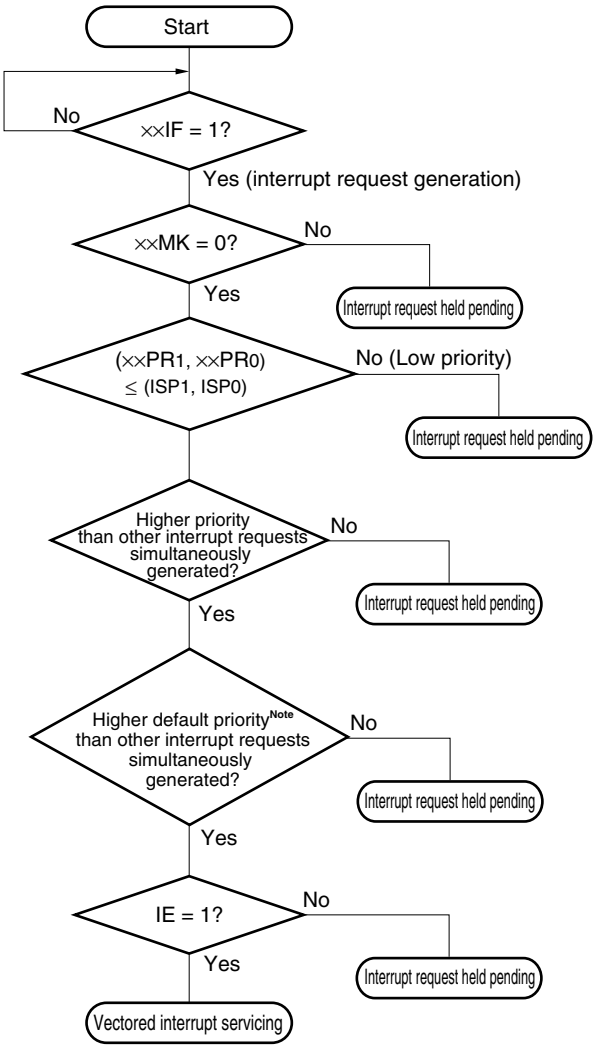

××IF:	Interrupt request flag
××MK:	Interrupt mask flag
××PR0:	Priority specification flag 0
××PR1:	Priority specification flag 1
IE:	Flag that controls acknowledgment of maskable interrupt request (1 = Enable, 0 = Disable)
ISP0, ISP1:	Flag that indicates the priority level of the interrupt currently being serviced (see **Figure 17-6**)

Note For the default priority, refer to **Table 17-1 Interrupt Source List**.

Figure 17-8. Interrupt Request Acknowledgment Timing (Minimum Time)

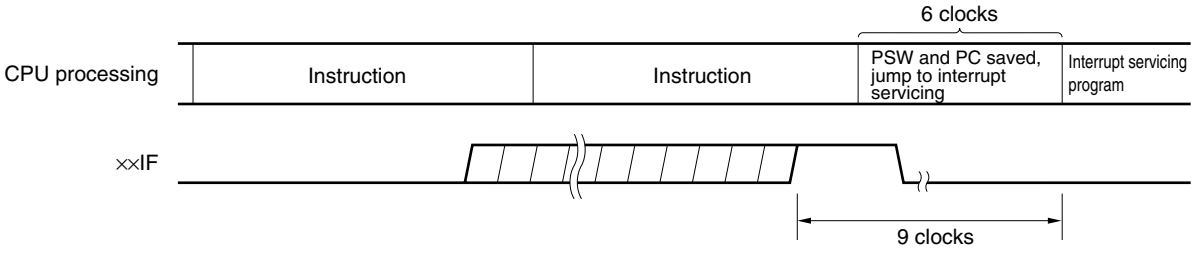

Remark 1 clock: 1/f_{CLK} (f_{CLK}: CPU clock)

Figure 17-9. Interrupt Request Acknowledgment Timing (Maximum Time)

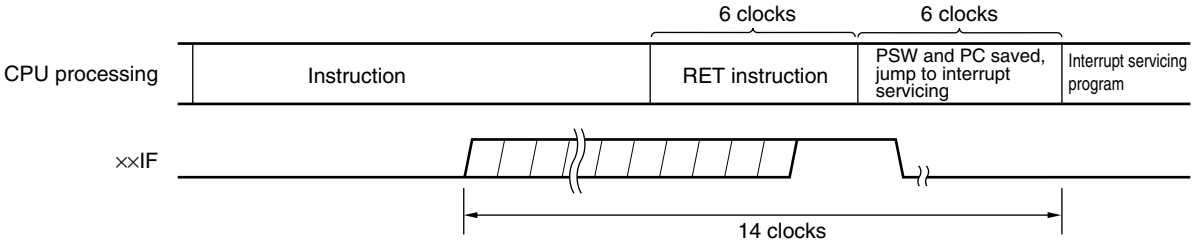

Remark 1 clock: 1/f_{CLK} (f_{CLK}: CPU clock)

17.4.2 Software interrupt request acknowledgment

A software interrupt acknowledge is acknowledged by BRK instruction execution. Software interrupts cannot be disabled.

If a software interrupt request is acknowledged, the contents are saved into the stacks in the order of the program status word (PSW), then program counter (PC), the IE flag is reset (0), and the contents of the vector table (0007EH, 0007FH) are loaded into the PC and branched.

Restoring from a software interrupt is possible by using the RETB instruction.

Caution Do not use the RETI instruction for restoring from the software interrupt.

17.4.3 Multiple interrupt servicing

Multiple interrupt servicing occurs when another interrupt request is acknowledged during execution of an interrupt.

Multiple interrupt servicing does not occur unless the interrupt request acknowledgment enabled state is selected (IE = 1). When an interrupt request is acknowledged, interrupt request acknowledgment becomes disabled (IE = 0). Therefore, to enable multiple interrupt servicing, it is necessary to set (1) the IE flag with the EI instruction during interrupt servicing to enable interrupt acknowledgment.

Moreover, even if interrupts are enabled, multiple interrupt servicing may not be enabled, this being subject to interrupt priority control. Two types of priority control are available: default priority control and programmable priority control. Programmable priority control is used for multiple interrupt servicing.

In the interrupt enabled state, if an interrupt request with a priority equal to or higher than that of the interrupt currently being serviced is generated, it is acknowledged for multiple interrupt servicing. If an interrupt with a priority lower than that of the interrupt currently being serviced is generated during interrupt servicing, it is not acknowledged for multiple interrupt servicing. Interrupt requests that are not enabled because interrupts are in the interrupt disabled state or because they have a lower priority are held pending. When servicing of the current interrupt ends, the pending interrupt request is acknowledged following execution of at least one main processing instruction execution.

Table 17-5 shows relationship between interrupt requests enabled for multiple interrupt servicing and Figure 17-10 shows multiple interrupt servicing examples.

Table 17-5. Relationship Between Interrupt Requests Enabled for Multiple Interrupt Servicing During Interrupt Servicing

Multiple Interrupt Request / Interrupt Being Serviced		Maskable Interrupt Request								Software Interrupt Request
		Priority Level 0 (PR = 00)		Priority Level 1 (PR = 01)		Priority Level 2 (PR = 10)		Priority Level 3 (PR = 11)		
		IE = 1	IE = 0	IE = 1	IE = 0	IE = 1	IE = 0	IE = 1	IE = 0	
Maskable interrupt	ISP1 = 0 ISP0 = 0	○	×	×	×	×	×	×	×	○
	ISP1 = 0 ISP0 = 1	○	×	○	×	×	×	×	×	○
	ISP1 = 1 ISP0 = 0	○	×	○	×	○	×	×	×	○
	ISP1 = 1 ISP0 = 1	○	×	○	×	○	×	○	×	○
Software interrupt		○	×	○	×	○	×	○	×	○

Remarks 1. ○: Multiple interrupt servicing enabled

2. ×: Multiple interrupt servicing disabled

3. ISP0, ISP1, and IE are flags contained in the PSW.

ISP1 = 0, ISP0 = 0: An interrupt of level 1 or level 0 is being serviced.

ISP1 = 0, ISP0 = 1: An interrupt of level 2 is being serviced.

ISP1 = 1, ISP0 = 0: An interrupt of level 3 is being serviced.

ISP1 = 1, ISP0 = 1: Wait for An interrupt acknowledgment.

IE = 0: Interrupt request acknowledgment is disabled.

IE = 1: Interrupt request acknowledgment is enabled.

4. PR is a flag contained in PR00L, PR00H, PR01L, PR01H, PR02L, PR02H, PR10L, PR10H, PR11L, PR11H, PR12L, and PR12H.

PR = 00: Specify level 0 with ××PR1× = 0, ××PR0× = 0 (higher priority level)

PR = 01: Specify level 1 with ××PR1× = 0, ××PR0× = 1

PR = 10: Specify level 2 with ××PR1× = 1, ××PR0× = 0

PR = 11: Specify level 3 with ××PR1× = 1, ××PR0× = 1 (lower priority level)

Figure 17-10. Examples of Multiple Interrupt Servicing (1/2)

Example 1. Multiple interrupt servicing occurs twice

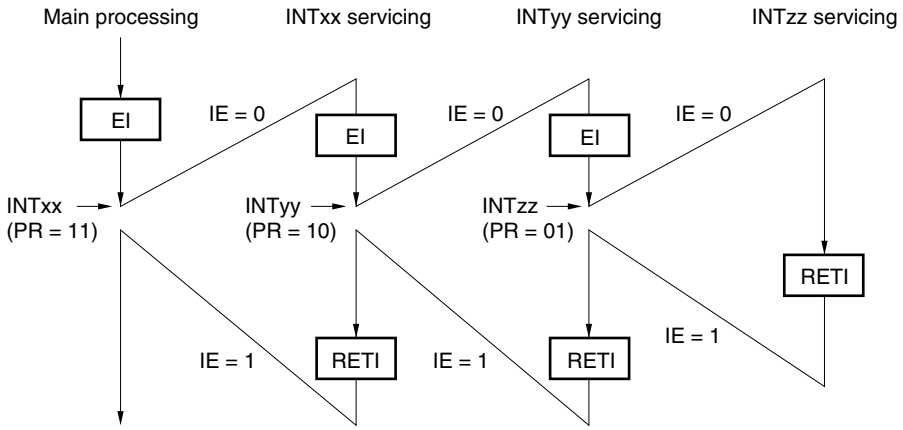

During servicing of interrupt INTxx, two interrupt requests, INTyy and INTzz, are acknowledged, and multiple interrupt servicing takes place. Before each interrupt request is acknowledged, the EI instruction must always be issued to enable interrupt request acknowledgment.

Example 2. Multiple interrupt servicing does not occur due to priority control

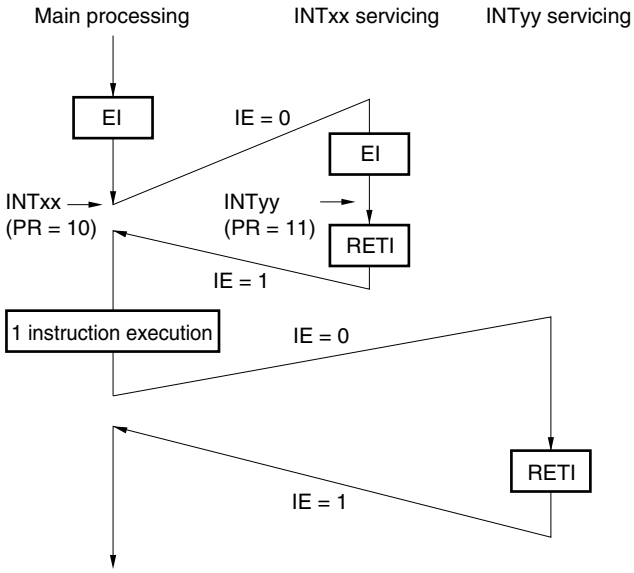

Interrupt request INTyy issued during servicing of interrupt INTxx is not acknowledged because its priority is lower than that of INTxx, and multiple interrupt servicing does not take place. The INTyy interrupt request is held pending, and is acknowledged following execution of one main processing instruction.

PR = 00: Specify level 0 with ××PR1× = 0, ××PR0× = 0 (higher priority level)
PR = 01: Specify level 1 with ××PR1× = 0, ××PR0× = 1
PR = 10: Specify level 2 with ××PR1× = 1, ××PR0× = 0
PR = 11: Specify level 3 with ××PR1× = 1, ××PR0× = 1 (lower priority level)
IE = 0: Interrupt request acknowledgment is disabled
IE = 1: Interrupt request acknowledgment is enabled.

Figure 17-10. Examples of Multiple Interrupt Servicing (2/2)

Example 3. Multiple interrupt servicing does not occur because interrupts are not enabled

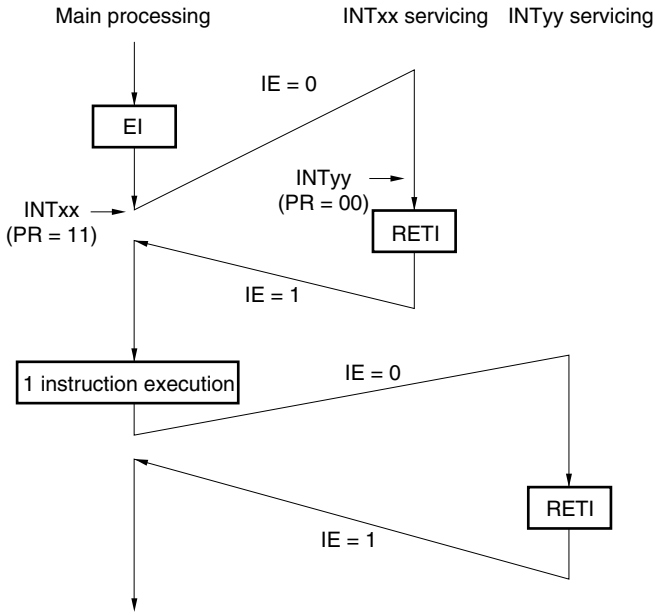

Interrupts are not enabled during servicing of interrupt INTxx (EI instruction is not issued), therefore, interrupt request INTyy is not acknowledged and multiple interrupt servicing does not take place. The INTyy interrupt request is held pending, and is acknowledged following execution of one main processing instruction.

PR = 00: Specify level 0 with ××PR1× = 0, ××PR0× = 0 (higher priority level)
PR = 01: Specify level 1 with ××PR1× = 0, ××PR0× = 1
PR = 10: Specify level 2 with ××PR1× = 1, ××PR0× = 0
PR = 11: Specify level 3 with ××PR1× = 1, ××PR0× = 1 (lower priority level)
IE = 0: Interrupt request acknowledgment is disabled
IE = 1: Interrupt request acknowledgment is enabled.

17.4.4 Interrupt request hold

There are instructions where, even if an interrupt request is issued for them while another instruction is being executed, request acknowledgment is held pending until the end of execution of the next instruction. These instructions (interrupt request hold instructions) are listed below.

- MOV PSW, #byte
- MOV PSW, A
- MOV1 PSW. bit, CY
- SET1 PSW. bit
- CLR1 PSW. bit
- RETB
- RETI
- POP PSW
- BTCLR PSW. bit, $addr8
- EI
- DI
- SKC
- SKNC
- SKZ
- SKNZ
- SKH
- SKNH
- Manipulation instructions for the IF0L, IF0H, IF1L, IF1H, IF2L, IF2H, MK0L, MK0H, MK1L, MK1H, MK2L, MK2H, PR00L, PR00H, PR01L, PR01H, PR02L, PR02H, PR10L, PR10H, PR11L, PR11H, PR12L, and PR12H registers.

Caution The BRK instruction is not one of the above-listed interrupt request hold instructions. However, the software interrupt activated by executing the BRK instruction causes the IE flag to be cleared. Therefore, even if a maskable interrupt request is generated during execution of the BRK instruction, the interrupt request is not acknowledged.

Figure 17-11 shows the timing at which interrupt requests are held pending.

Figure 17-11. Interrupt Request Hold

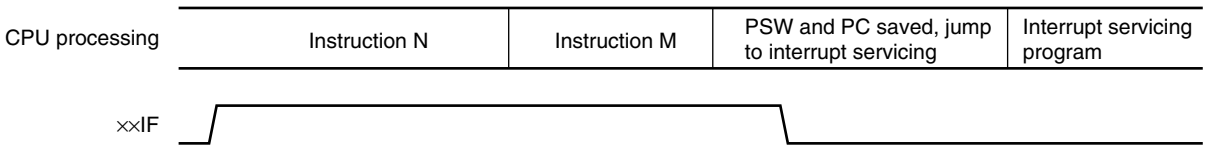

Remarks 1. Instruction N: Interrupt request hold instruction

2. Instruction M: Instruction other than interrupt request hold instruction

3. The ××PR (priority level) values do not affect the operation of ××IF (interrupt request).

CHAPTER 18 STANDBY FUNCTION

18.1 Standby Function and Configuration

18.1.1 Standby function

The standby function reduces the operating current of the system, and the following two modes are available.

(1) HALT mode

HALT instruction execution sets the HALT mode. In the HALT mode, the CPU operation clock is stopped. If the high-speed system clock oscillator, internal high-speed oscillator, 40 MHz internal high-speed oscillator, or subsystem clock oscillator[Note] is operating before the HALT mode is set, oscillation of each clock continues. In this mode, the operating current is not decreased as much as in the STOP mode, but the HALT mode is effective for restarting operation immediately upon interrupt request generation and carrying out intermittent operations frequently.

Note The 78K0R/IB3 doesn't have the subsystem clock.

(2) STOP mode

STOP instruction execution sets the STOP mode. In the STOP mode, the high-speed system clock oscillator and internal high-speed oscillator stop, stopping the whole system, thereby considerably reducing the CPU operating current.

Because this mode can be cleared by an interrupt request, it enables intermittent operations to be carried out. However, because a wait time is required to secure the oscillation stabilization time after the STOP mode is released when the X1 clock is selected, select the HALT mode if it is necessary to start processing immediately upon interrupt request generation.

In either of these two modes, all the contents of registers, flags and data memory just before the standby mode is set are held. The I/O port output latches and output buffer statuses are also held.

Cautions
1. **The STOP mode can be used only when the CPU is operating on the main system clock. The STOP mode cannot be set while the CPU operates with the subsystem clock. The HALT mode can be used when the CPU is operating on either the main system clock or the subsystem clock.**
2. **When shifting to the STOP mode, be sure to stop the peripheral hardware operation operating with main system clock before executing STOP instruction.**
3. **The following sequence is recommended for operating current reduction of the A/D converter when the standby function is used: First clear bit 7 (ADCS) and bit 0 (ADCE) of the A/D converter mode register (ADM) to 0 to stop the A/D conversion operation, and then execute the STOP instruction.**
4. **The following sequence is recommended for operating current reduction of the comparator when the standby function is used: First clear bit 7 (CnEN) of the comparator n control register (CnCTL) and bit 7 (CnVRE) of the comparator n internal reference voltage selection register to 0 to stop the comparator operation, and then execute the STOP instruction.**
5. **The following sequence is recommended for operating current reduction of the programmable gain amplifier when the standby function is used: First clear bit 7 (OAEN) of the programmable gain amplifier control register (OAM) to 0 to stop the programmable gain amplifier operation, and then execute the STOP instruction.**

Remark n = 0, 1

Cautions 6. It can be selected by the option byte whether the internal low-speed oscillator continues oscillating or stops in the HALT or STOP mode. For details, see CHAPTER 23 OPTION BYTE.

7. The STOP instruction cannot be executed when the CPU operates on the 40 MHz internal high-speed oscillation clock. Be sure to execute the STOP instruction after shifting to internal high-speed oscillation clock operation.

18.1.2 Registers controlling standby function

The standby function is controlled by the following two registers.

- Oscillation stabilization time counter status register (OSTC)
- Oscillation stabilization time select register (OSTS)

Remark For the registers that start, stop, or select the clock, see **CHAPTER 5 CLOCK GENERATOR**.

(1) Oscillation stabilization time counter status register (OSTC)

This is the register that indicates the count status of the X1 clock oscillation stabilization time counter.

The X1 clock oscillation stabilization time can be checked in the following case.

- If the X1 clock starts oscillation while the internal high-speed oscillation clock or subsystem clock[Note] is being used as the CPU clock.
- If the STOP mode is entered and then released while the internal high-speed oscillation clock is being used as the CPU clock with the X1 clock oscillating.

OSTC can be read by a 1-bit or 8-bit memory manipulation instruction.

When reset is released (reset by $\overline{\text{RESET}}$ input, POC, LVI, WDT, and executing an illegal instruction), the STOP instruction and MSTOP (bit 7 of CSC register) = 1 clear this register to 00H.

Note The 78K0R/IB3 doesn't have the subsystem clock.

Figure 18-1. Format of Oscillation Stabilization Time Counter Status Register (OSTC)

Address: FFFA2H After reset: 00H R

Symbol	7	6	5	4	3	2	1	0
OSTC	MOST 8	MOST 9	MOST 10	MOST 11	MOST 13	MOST 15	MOST 17	MOST 18

MOST 8	MOST 9	MOST 10	MOST 11	MOST 13	MOST 15	MOST 17	MOST 18	Oscillation stabilization time status		
									f_X = 10 MHz	f_X = 20 MHz
0	0	0	0	0	0	0	0	$2^8/f_X$ max.	25.6 μs max.	12.8 μs max.
1	0	0	0	0	0	0	0	$2^8/f_X$ min.	25.6 μs min.	12.8 μs min.
1	1	0	0	0	0	0	0	$2^9/f_X$ min.	51.2 μs min.	25.6 μs min.
1	1	1	0	0	0	0	0	$2^{10}/f_X$ min.	102.4 μs min.	51.2 μs min.
1	1	1	1	0	0	0	0	$2^{11}/f_X$ min.	204.8 μs min.	102.4 μs min.
1	1	1	1	1	0	0	0	$2^{13}/f_X$ min.	819.2 μs min.	409.6 μs min.
1	1	1	1	1	1	0	0	$2^{15}/f_X$ min.	3.27 ms min.	1.64 ms min.
1	1	1	1	1	1	1	0	$2^{17}/f_X$ min.	13.11 ms min.	6.55 ms min.
1	1	1	1	1	1	1	1	$2^{18}/f_X$ min.	26.21 ms min.	13.11 ms min.

Cautions 1. After the above time has elapsed, the bits are set to 1 in order from MOST8 and remain 1.

2. The oscillation stabilization time counter counts up to the oscillation stabilization time set by OSTS. If the STOP mode is entered and then released while the internal high-speed oscillation clock is being used as the CPU clock, set the oscillation stabilization time as follows.

- **Desired OSTC oscillation stabilization time ≤ Oscillation stabilization time set by OSTS**

Note, therefore, that only the status up to the oscillation stabilization time set by OSTS is set to OSTC after STOP mode is released.

3. The X1 clock oscillation stabilization wait time does not include the time until clock oscillation starts ("a" below).

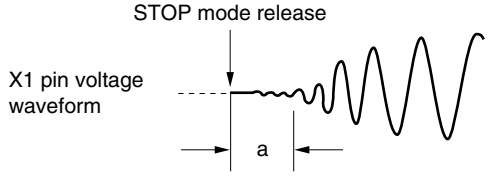

Remark fx: X1 clock oscillation frequency

(2) Oscillation stabilization time select register (OSTS)

This register is used to select the X1 clock oscillation stabilization wait time when the STOP mode is released.

When the X1 clock is selected as the CPU clock, the operation waits for the time set using OSTS after the STOP mode is released.

When the internal high-speed oscillation clock is selected as the CPU clock, confirm with OSTC that the desired oscillation stabilization time has elapsed after the STOP mode is released. The oscillation stabilization time can be checked up to the time set using OSTC.

OSTS can be set by an 8-bit memory manipulation instruction.

Reset signal generation sets this register to 07H.

Figure 18-2. Format of Oscillation Stabilization Time Select Register (OSTS)

Address: FFFA3H After reset: 07H R/W

Symbol	7	6	5	4	3	2	1	0
OSTS	0	0	0	0	0	OSTS2	OSTS1	OSTS0

OSTS2	OSTS1	OSTS0	Oscillation stabilization time selection		
				fx = 10 MHz	fx = 20 MHz
0	0	0	2^8/fx	25.6 μs	Setting prohibited
0	0	1	2^9/fx	51.2 μs	25.6 μs
0	1	0	2^{10}/fx	102.4 μs	51.2 μs
0	1	1	2^{11}/fx	204.8 μs	102.4 μs
1	0	0	2^{13}/fx	819.2 μs	409.6 μs
1	0	1	2^{15}/fx	3.27 ms	1.64 ms
1	1	0	2^{17}/fx	13.11 ms	6.55 ms
1	1	1	2^{18}/fx	26.21 ms	13.11 ms

Cautions 1. To set the STOP mode when the X1 clock is used as the CPU clock, set OSTS before executing the STOP instruction.

2. Setting the oscillation stabilization time to 20 μs or less is prohibited.

3. Before changing the setting of the OSTS register, confirm that the count operation of the OSTC register is completed.

4. Do not change the value of the OSTS register during the X1 clock oscillation stabilization time.

5. The oscillation stabilization time counter counts up to the oscillation stabilization time set by OSTS. If the STOP mode is entered and then released while the internal high-speed oscillation clock is being used as the CPU clock, set the oscillation stabilization time as follows.

- **Desired OSTC oscillation stabilization time ≤ Oscillation stabilization time set by OSTS**

Note, therefore, that only the status up to the oscillation stabilization time set by OSTS is set to OSTC after STOP mode is released.

6. The X1 clock oscillation stabilization wait time does not include the time until clock oscillation starts ("a" below).

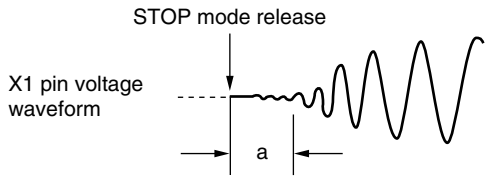

Remark fx: X1 clock oscillation frequency

18.2 Standby Function Operation

18.2.1 HALT mode

(1) HALT mode

The HALT mode is set by executing the HALT instruction. HALT mode can be set regardless of whether the CPU clock before the setting was the high-speed system clock, internal high-speed oscillation clock, 40 MHz internal high-speed oscillation clock, or subsystem clock[Note].

The operating statuses in the HALT mode are shown below.

Note The 78K0R/IB3 doesn't have the subsystem clock.

Table 18-1. Operating Statuses in HALT Mode (1/2)

HALT Mode Setting / Item			When HALT Instruction Is Executed While CPU Is Operating on Main System Clock		
			When CPU Is Operating on Internal High-Speed Oscillation Clock (f_{IH}) or 40 MHz Internal High-Speed Oscillation Clock (f_{IH40})	When CPU Is Operating on X1 Clock (f_X)	When CPU Is Operating on External Main System Clock (f_{EX})
System clock			Clock supply to the CPU is stopped		
	Main system clock	f_{IH}, f_{IH40}	Operation continues (cannot be stopped)	Status before HALT mode was set is retained	
		f_X	Status before HALT mode was set is retained	Operation continues (cannot be stopped)	Cannot operate
		f_{EX}		Cannot operate	Operation continues (cannot be stopped)
	Subsystem clock	f_{XT}	Status before HALT mode was set is retained		
	f_{IL}		Set by bits 0 (WDSTBYON) and 4 (WTON) of option byte (000C0H) • WTON = 0: Stops • WTON = 1 and WDSTBYON = 1: Oscillates • WTON = 1 and WDSTBYON = 0: Stops		
CPU			Operation stopped		
Flash memory			Operation stopped		
RAM			The value is retained		
Port (latch)			Status before HALT mode was set is retained		
Timer array unit TAUS			Operable		
Inverter control function					
Real-time counter (RTC)					
Watchdog timer			Set by bits 0 (WDSTBYON) and 4 (WTON) of option byte (000C0H) • WTON = 0: Stops • WTON = 1 and WDSTBYON = 1: Operates • WTON = 1 and WDSTBYON = 0: Stops		
Clock output/buzzer output			Operable		
A/D converter					
Programmable gain amplifier					
Comparator					
Serial array unit (SAU)					
Serial interface (IICA)					
Multiplier/divider					
DMA controller					
Power-on-clear function					
Low-voltage detection function					
External interrupt					

Remarks 1. f_{IH} : Internal high-speed oscillation clock
f_{IH40} : 40 MHz internal high-speed oscillation clock
f_X : X1 clock
f_{EX} : External main system clock
f_{XT} : XT1 clock
f_{IL} :Internal low-speed oscillation clock

2. The functions mounted depend on the product. See **1.6 Block Diagram** and **1.7 Outline of Functions**.

Table 18-1. Operating Statuses in HALT Mode (2/2)

Item \ HALT Mode Setting	When HALT Instruction Is Executed While CPU Is Operating on Subsystem Clock
	When CPU Is Operating on XT1 Clock (f_{XT})
System clock	Clock supply to the CPU is stopped
Main system clock: f_{IH}, f_{IH40}	Status before HALT mode was set is retained
Main system clock: f_X	
Main system clock: f_{EX}	
Subsystem clock: f_{XT}	Operation continues (cannot be stopped)
f_{IL}	Set by bits 0 (WDSTBYON) and 4 (WTON) of option byte (000C0H) • WTON = 0: Stops • WTON = 1 and WDSTBYON = 1: Oscillates • WTON = 1 and WDSTBYON = 0: Stops
CPU	Operation stopped
Flash memory	Operation stopped (wait state in low-current consumption mode)
RAM	The value is retained
Port (latch)	Status before HALT mode was set is retained
Timer array unit TAUS	Operable
Inverter control function	
Real-time counter (RTC)	
Watchdog timer	Set by bits 0 (WDSTBYON) and 4 (WTON) of option byte (000C0H) • WTON = 0: Stops • WTON = 1 and WDSTBYON = 1: Operates • WTON = 1 and WDSTBYON = 0: Stops
Clock output/buzzer output	Operable
A/D converter	Cannot operate
Programmable gain amplifier	Operable
Comparator	
Serial array unit (SAU)	
Serial interface (IICA)	Cannot operate
Multiplier/divider	Operable
DMA controller	
Power-on-clear function	
Low-voltage detection function	
External interrupt	

Remarks 1. f_{IH} : Internal high-speed oscillation clock
f_{IH40} : 40 MHz internal high-speed oscillation clock
f_X : X1 clock
f_{EX} : External main system clock
f_{XT} : XT1 clock
f_{IL} :Internal low-speed oscillation clock

2. The functions mounted depend on the product. See **1.6 Block Diagram** and **1.7 Outline of Functions**.

(2) HALT mode release

The HALT mode can be released by the following two sources.

(a) Release by unmasked interrupt request

When an unmasked interrupt request is generated, the HALT mode is released. If interrupt acknowledgment is enabled, vectored interrupt servicing is carried out. If interrupt acknowledgment is disabled, the next address instruction is executed.

Figure 18-3. HALT Mode Release by Interrupt Request Generation

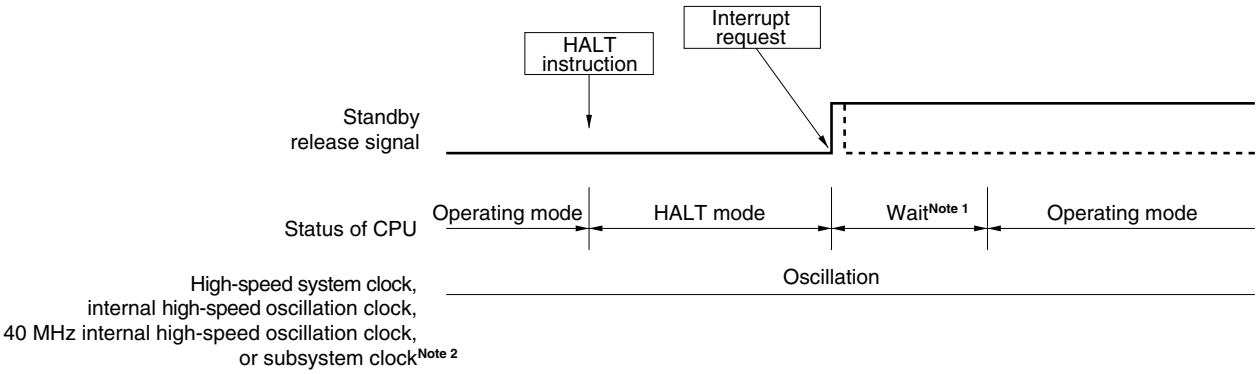

Notes 1. The wait time is as follows:

- When vectored interrupt servicing is carried out
  - When main system clock is used: 10 to 12 clocks
  - When subsystem clock is used: 8 to 10 clocks
- When vectored interrupt servicing is not carried out
  - When main system clock is used: 5 or 6 clocks
  - When subsystem clock is used: 3 or 4 clocks

2. The 78K0R/IB3 doesn't have the subsystem clock.

Remark The broken lines indicate the case when the interrupt request which has released the standby mode is acknowledged.

(b) Release by reset signal generation

When the reset signal is generated, HALT mode is released, and then, as in the case with a normal reset operation, the program is executed after branching to the reset vector address.

Figure 18-4. HALT Mode Release by Reset (1/2)

(1) When high-speed system clock is used as CPU clock

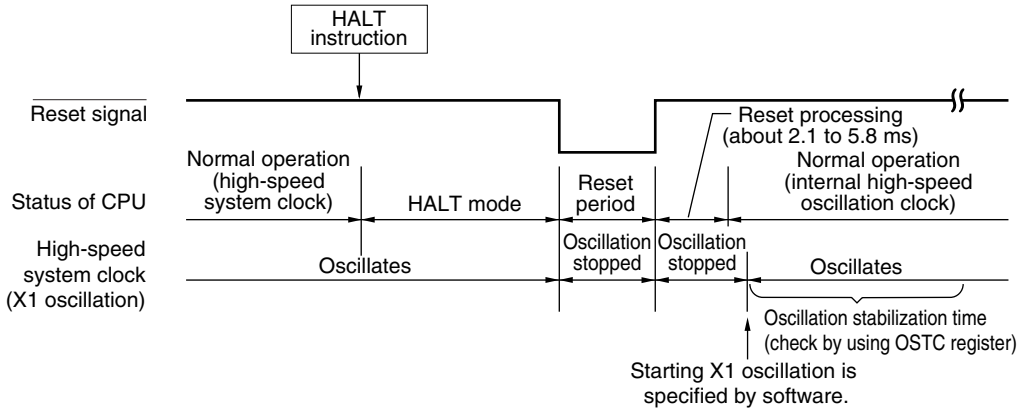

(2) When internal high-speed oscillation clock or 40 MHz internal high-speed oscillation clock is used as CPU clock

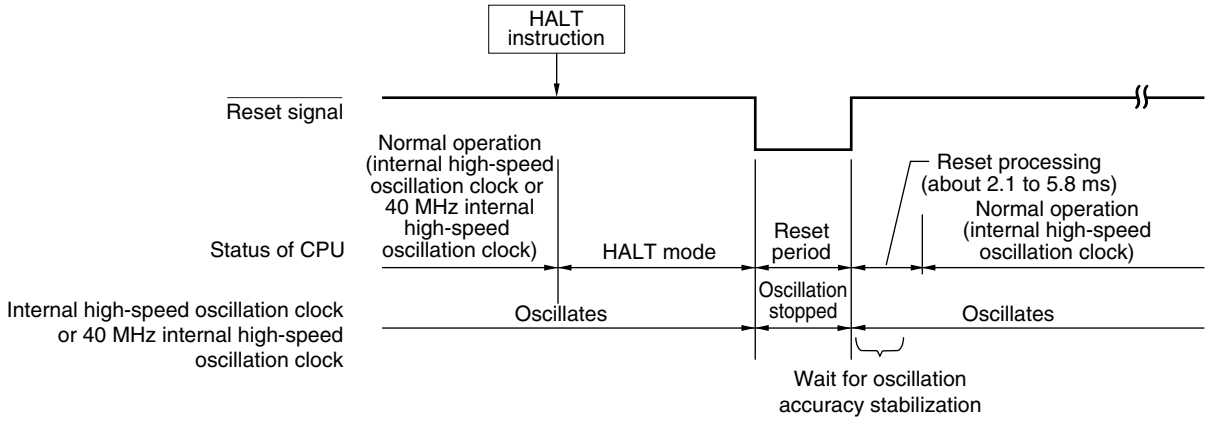

Remark fx: X1 clock oscillation frequency

Figure 18-4. HALT Mode Release by Reset (2/2)

(3) When subsystem clock is used as CPU clock [Note]

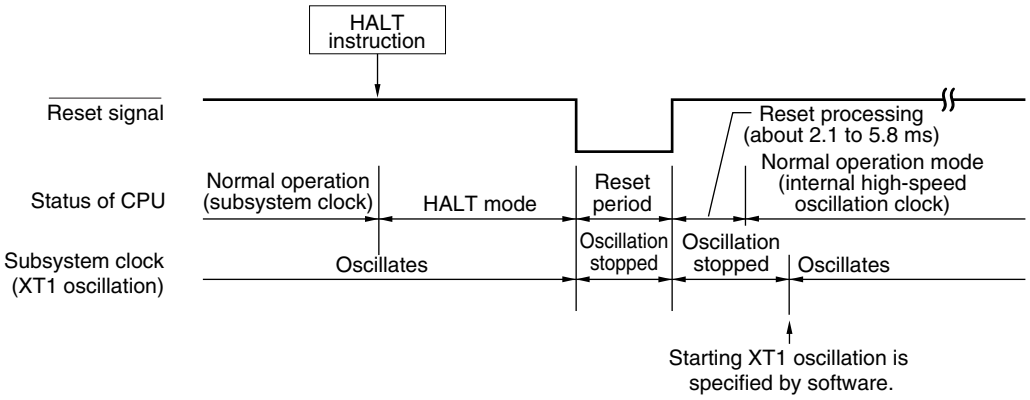

Note The 78K0R/IB3 doesn't have the subsystem clock.

18.2.2 STOP mode

(1) STOP mode setting and operating statuses

The STOP mode is set by executing the STOP instruction, and it can be set only when the CPU clock before the setting was the internal high-speed oscillation clock, X1 clock, or external main system clock.

Cautions 1. Because the interrupt request signal is used to clear the standby mode, if there is an interrupt source with the interrupt request flag set and the interrupt mask flag reset, the standby mode is immediately cleared if set. Thus, the STOP mode is reset to the HALT mode immediately after execution of the STOP instruction and the system returns to the operating mode as soon as the wait time set using the oscillation stabilization time select register (OSTS) has elapsed.

2. The STOP instruction cannot be executed when the CPU operates on the 40 MHz internal high-speed oscillation clock. Be sure to execute the STOP instruction after shifting to internal high-speed oscillation clock operation.

The operating statuses in the STOP mode are shown below.

Table 18-2. Operating Statuses in STOP Mode

Item \ STOP Mode Setting	When STOP Instruction Is Executed While CPU Is Operating on Main System Clock		
	When CPU Is Operating on Internal High-Speed Oscillation Clock (f_{IH})	When CPU Is Operating on X1 Clock (f_X)	When CPU Is Operating on External Main System Clock (f_{EX})
System clock	Clock supply to the CPU is stopped		
Main system clock f_{IH}	Stopped		
Main system clock f_X			
Main system clock f_{EX}			
Subsystem clock f_{XT}	Status before STOP mode was set is retained		
f_{IL}	Set by bits 0 (WDSTBYON) and 4 (WTON) of option byte (000C0H) • WTON = 0: Stops • WTON = 1 and WDSTBYON = 1: Oscillates • WTON = 1 and WDSTBYON = 0: Stops		
CPU	Operation stopped		
Flash memory	Operation stopped		
RAM	The value is retained		
Port (latch)	Status before STOP mode was set is retained		
Timer array unit TAUS	Operation disabled		
Inverter control function			
Real-time counter (RTC)	Operable		
Watchdog timer	Set by bits 0 (WDSTBYON) and 4 (WTON) of option byte (000C0H) • WTON = 0: Stops • WTON = 1 and WDSTBYON = 1: Operates • WTON = 1 and WDSTBYON = 0: Stops		
Clock output/buzzer output	Operable only when subsystem clock is selected as the count clock		
A/D converter	Operation disabled		
Programmable gain amplifier			
Comparator			
Serial array unit (SAU)			
Serial interface (IICA)	Wakeup by address match operable		
Multiplier/divider	Operation disabled		
DMA controller			
Power-on-clear function	Operable		
Low-voltage detection function			
External interrupt			

Remarks 1. f_{IH} : Internal high-speed oscillation clock
f_{IH40} : 40 MHz internal high-speed oscillation clock
f_X : X1 clock
f_{EX} : External main system clock
f_{XT} : XT1 clock
f_{IL} :Internal low-speed oscillation clock

2. The functions mounted depend on the product. See **1.6 Block Diagram** and **1.7 Outline of Functions**.

Cautions 1. To use the peripheral hardware that stops operation in the STOP mode, and the peripheral hardware for which the clock that stops oscillating in the STOP mode after the STOP mode is released, restart the peripheral hardware.

2. To stop the internal low-speed oscillation clock in the STOP mode, use an option byte to stop the watchdog timer operation in the HALT/STOP mode (bit 0 (WDSTBYON) of 000C0H = 0), and then execute the STOP instruction.

3. To shorten oscillation stabilization time after the STOP mode is released when the CPU operates with the high-speed system clock (X1 oscillation), temporarily switch the CPU clock to the internal high-speed oscillation clock before the next execution of the STOP instruction. Before changing the CPU clock from the internal high-speed oscillation clock to the high-speed system clock (X1 oscillation) after the STOP mode is released, check the oscillation stabilization time with the oscillation stabilization time counter status register (OSTC).

4. The STOP instruction cannot be executed when the CPU operates on the 40 MHz internal high-speed oscillation clock. Be sure to execute the STOP instruction after shifting to internal high-speed oscillation clock operation.

(2) STOP mode release

(a) Release by unmasked interrupt request

When an unmasked interrupt request is generated, the STOP mode is released. After the oscillation stabilization time has elapsed, if interrupt acknowledgment is enabled, vectored interrupt servicing is carried out. If interrupt acknowledgment is disabled, the next address instruction is executed.

Figure 18-5. STOP Mode Release by Interrupt Request Generation (1/2)

(1) When high-speed system clock (X1 oscillation) is used as CPU clock

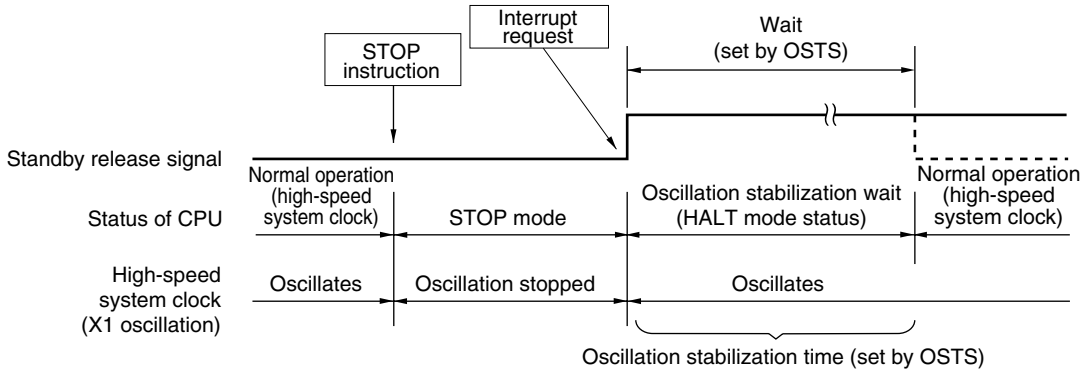

Figure 18-5. STOP Mode Release by Interrupt Request Generation (2/2)

(2) When high-speed system clock (external clock input) is used as CPU clock

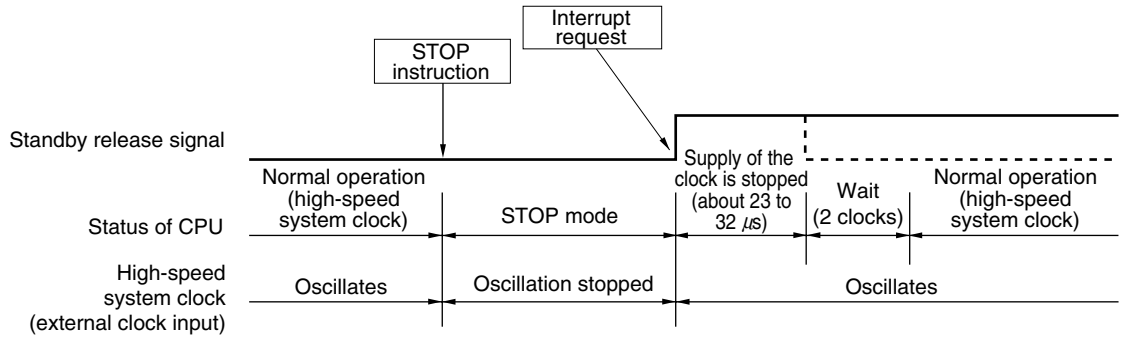

Remark The broken lines indicate the case when the interrupt request that has released the standby mode is acknowledged.

(3) When internal high-speed oscillation clock is used as CPU clock

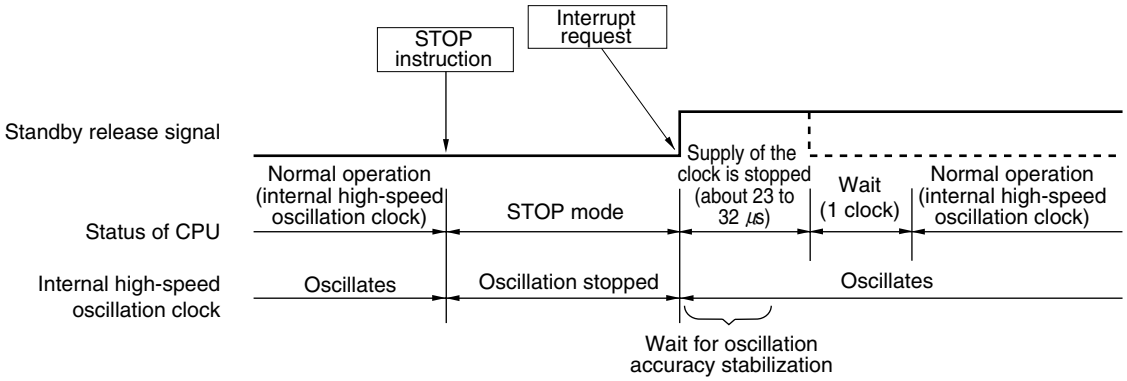

Remark The broken lines indicate the case when the interrupt request that has released the standby mode is acknowledged.

(b) Release by reset signal generation

When the reset signal is generated, STOP mode is released, and then, as in the case with a normal reset operation, the program is executed after branching to the reset vector address.

Figure 18-6. STOP Mode Release by Reset

(1) When high-speed system clock is used as CPU clock

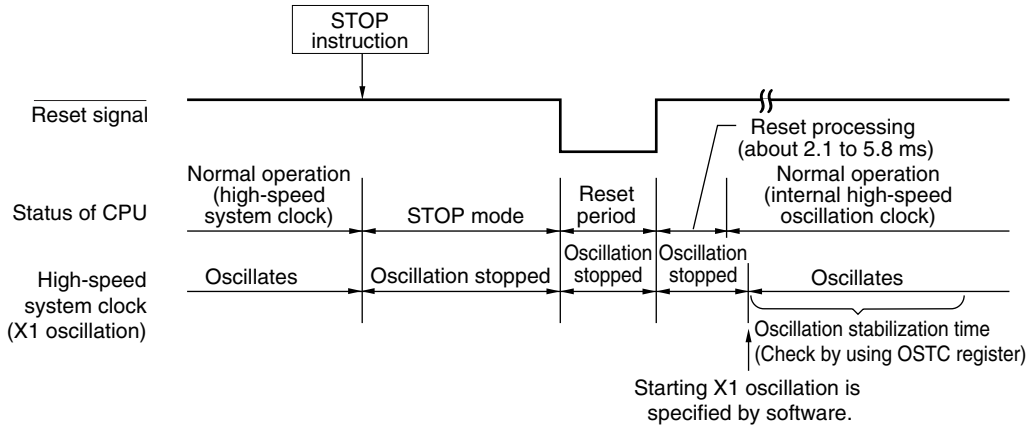

(2) When internal high-speed oscillation clock is used as CPU clock

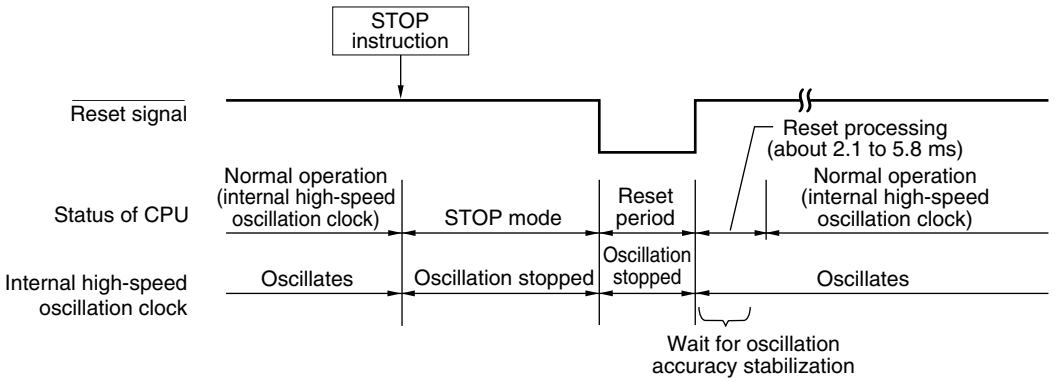

Remark fx: X1 clock oscillation frequency

CHAPTER 19 RESET FUNCTION

The following five operations are available to generate a reset signal.

(1) External reset input via $\overline{\text{RESET}}$ pin
(2) Internal reset by watchdog timer program loop detection
(3) Internal reset by comparison of supply voltage and detection voltage of power-on-clear (POC) circuit
(4) Internal reset by comparison of supply voltage of the low-voltage detector (LVI) or input voltage (EXLVI) from external input pin, and detection voltage
(5) Internal reset by execution of illegal instruction[Note 1]
(6) Internal reset by a reset processing check error

External and internal resets start program execution from the address at 0000H and 0001H when the reset signal is generated.

A reset is effected when a low level is input to the $\overline{\text{RESET}}$ pin, the watchdog timer overflows, or by POC and LVI circuit voltage detection or execution of illegal instruction[Note 1], and each item of hardware is set to the status shown in Tables 19-1 and 19-2. Each pin is high impedance during reset signal generation or during the oscillation stabilization time just after a reset release, except for P140[Note 2], which is low-level output.

When a low level is input to the $\overline{\text{RESET}}$ pin, the device is reset. It is released from the reset status when a high level is input to the $\overline{\text{RESET}}$ pin and program execution is started with the internal high-speed oscillation clock after reset processing. A reset by the watchdog timer is automatically released, and program execution starts using the internal high-speed oscillation clock (see **Figures 19-2** to **19-4**) after reset processing. Reset by POC and LVI circuit power supply detection is automatically released when $V_{DD} \geq V_{POR}$ or $V_{DD} \geq V_{LVI}$ after the reset, and program execution starts using the internal high-speed oscillation clock (see **CHAPTER 20 POWER-ON-CLEAR CIRCUIT** and **CHAPTER 21 LOW-VOLTAGE DETECTOR**) after reset processing.

Notes 1. The illegal instruction is generated when instruction code FFH is executed.
Reset by the illegal instruction execution not issued by emulation with the in-circuit emulator or on-chip debug emulator.

2. 48-pin products of 78K0R/IC3, 78K0R/ID3 and 78K0R/IE3 only.

Cautions 1. For an external reset, input a low level for 10 μs or more to the $\overline{\text{RESET}}$ pin.
(To perform an external reset upon power application, a low level of at least 10 μs must be continued during the period in which the supply voltage is within the operating range ($V_{DD} \geq$ 2.7 V).)

2. During reset input, the X1 clock, XT1 clock (in the products other than the 78K0R/IB3), internal high-speed oscillation clock, and internal low-speed oscillation clock stop oscillating. External main system clock input becomes invalid.

3. When the STOP mode is released by a reset, the RAM contents in the STOP mode are held during reset input.

4. When reset is effected, port pin P140 is set to low-level output and other port pins become high-impedance, because each SFR and 2nd SFR are initialized.

Remark V_{POR}: POC power supply rise detection voltage

<R> **Figure 19-1. Block Diagram of Reset Function**

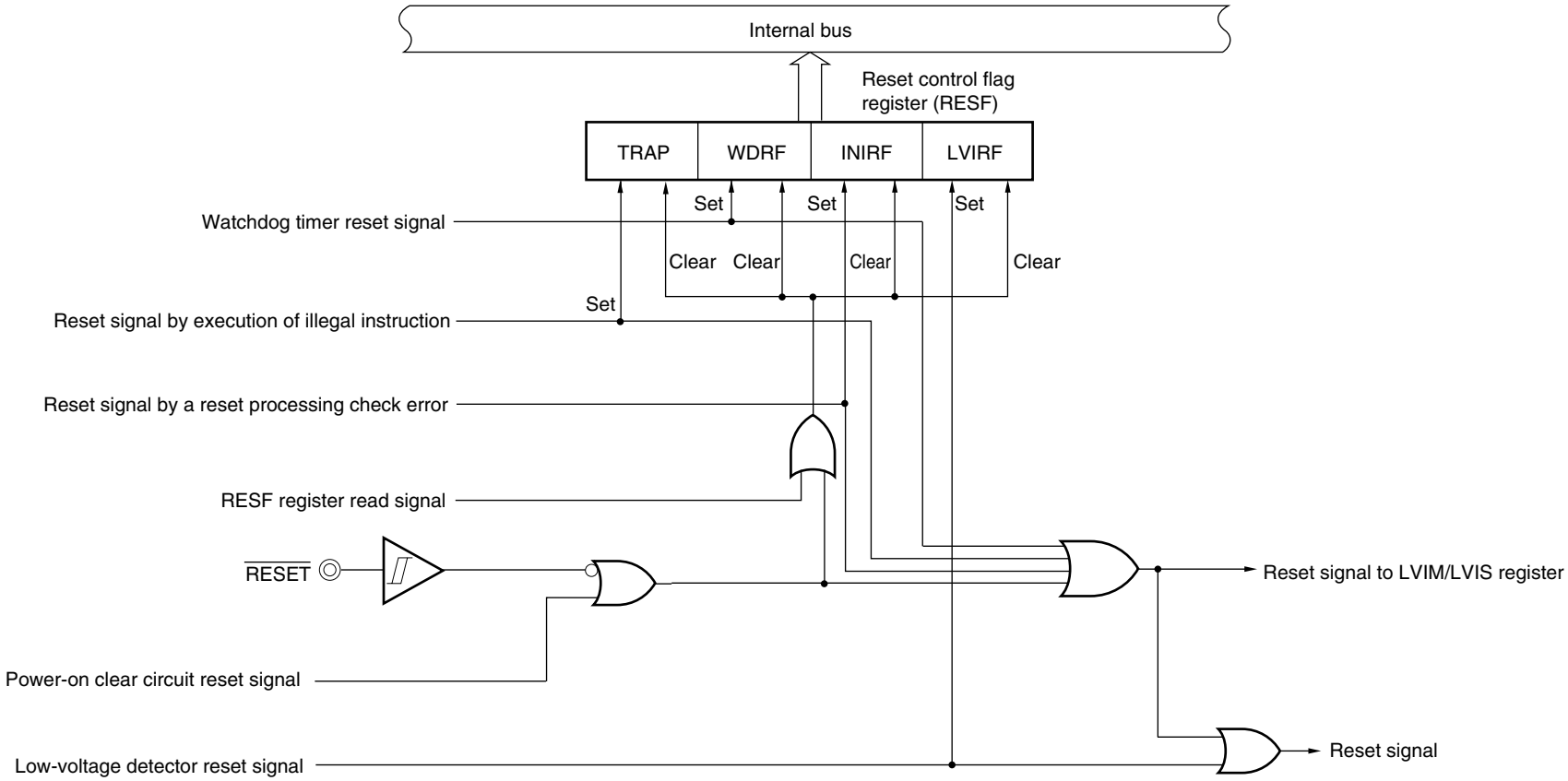

Caution An LVI circuit internal reset does not reset the LVI circuit.

Remarks 1. LVIM: Low-voltage detection register

2. LVIS: Low-voltage detection level select register

Figure 19-2. Timing of Reset by $\overline{\text{RESET}}$ Input

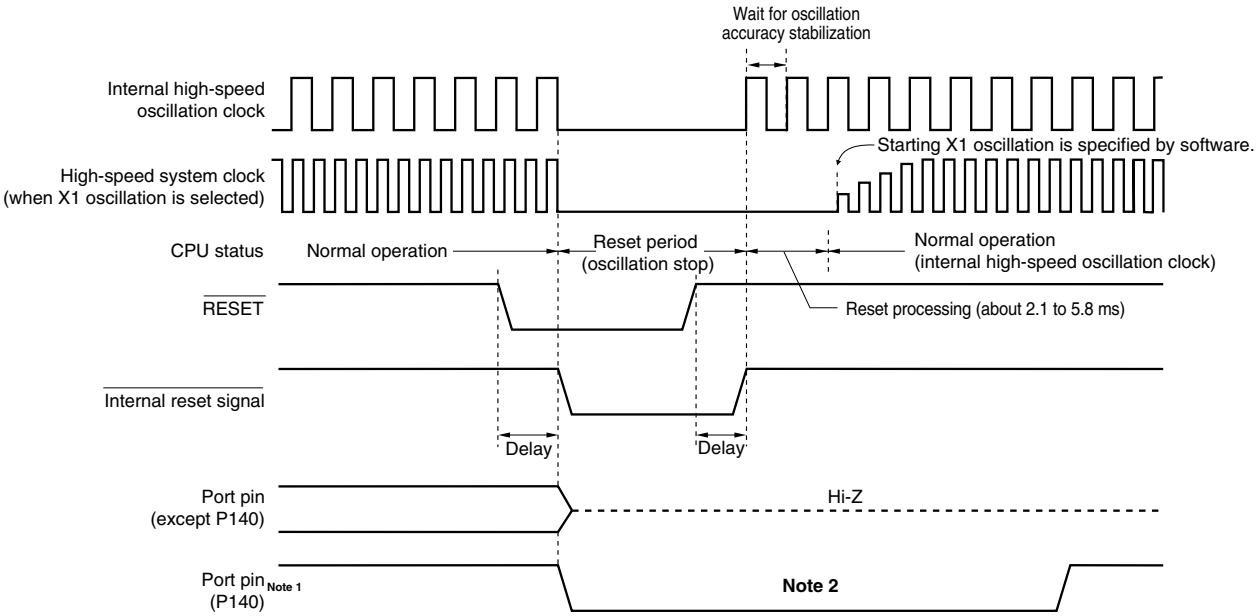

Notes 1. 48-pin products of 78K0R/IC3, 78K0R/ID3 and 78K0R/IE3 only.

2. When P140 is set to high-level output before reset is effected, the output signal of P140 can be dummy-output as a reset signal to an external device, because P140 outputs a low level when reset is effected. To release a reset signal to an external device, set P140 to high-level output by software.

Figure 19-3. Timing of Reset Due to Execution of Illegal Instruction or Watchdog Timer Overflow

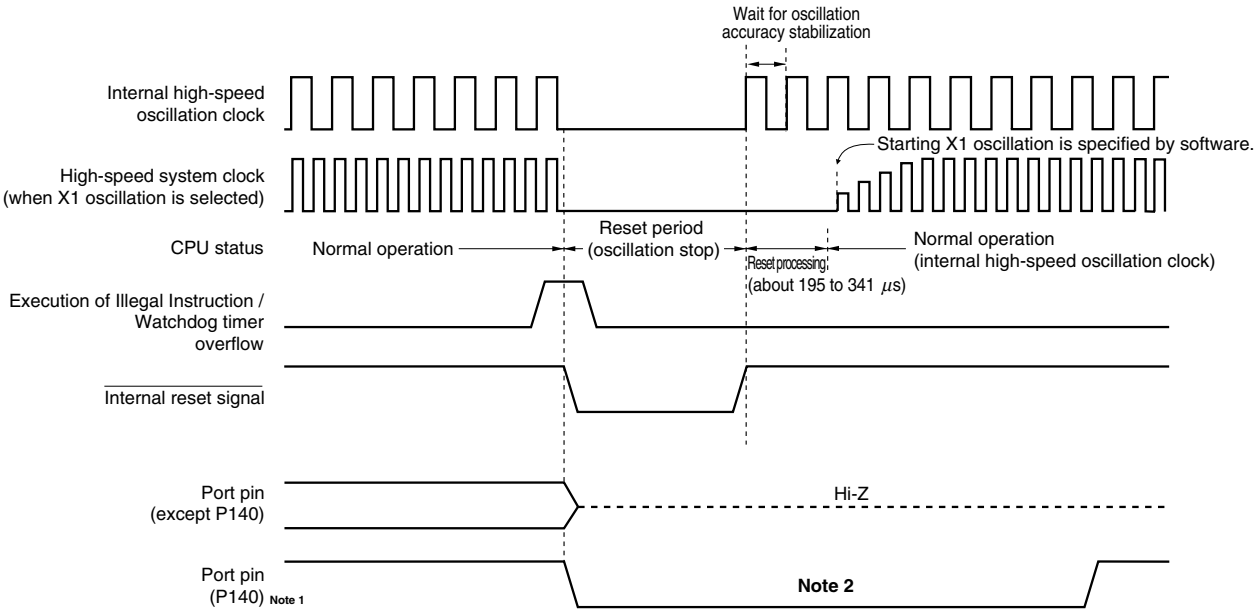

Notes 1. 48-pin products of 78K0R/IC3, 78K0R/ID3 and 78K0R/IE3 only.

2. When P140 is set to high-level output before reset is effected, the output signal of P140 can be dummy-output as a reset signal to an external device, because P140 outputs a low level when reset is effected. To release a reset signal to an external device, set P140 to high-level output by software.

Caution A watchdog timer internal reset resets the watchdog timer.

Figure 19-4. Timing of Reset in STOP Mode by $\overline{\text{RESET}}$ Input

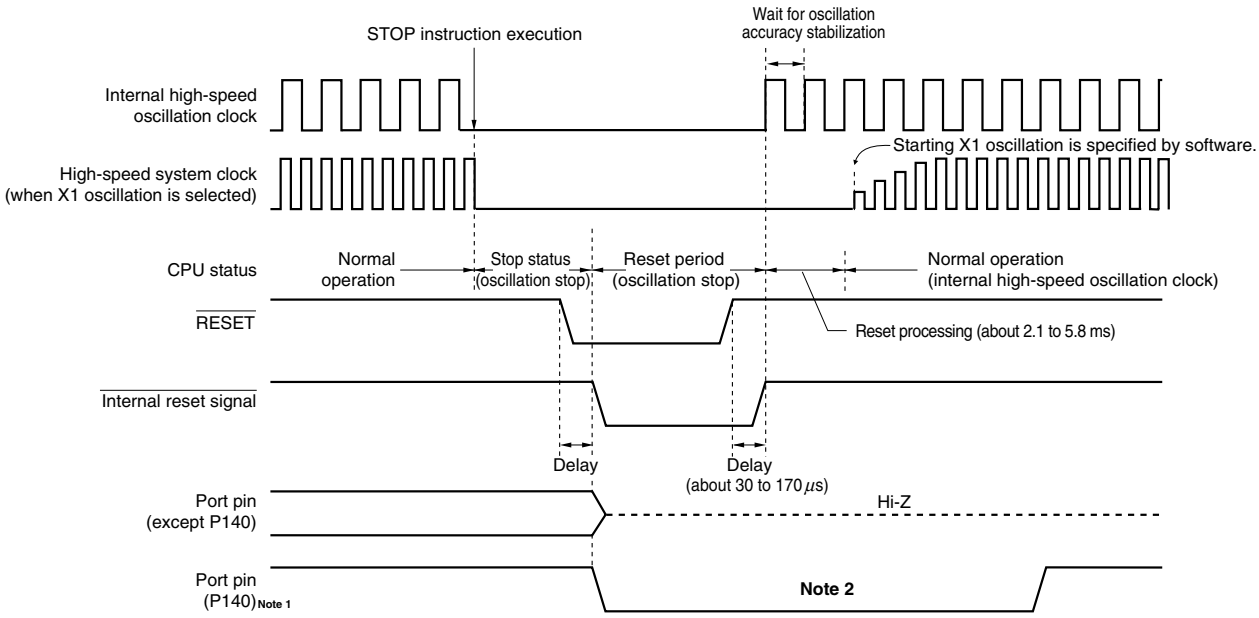

Notes 1. 48-pin products of 78K0R/IC3, 78K0R/ID3 and 78K0R/IE3 only.

2. When P140 is set to high-level output before reset is effected, the output signal of P140 can be dummy-output as a reset signal to an external device, because P140 outputs a low level when reset is effected. To release a reset signal to an external device, set P140 to high-level output by software.

Remark For the reset timing of the power-on-clear circuit and low-voltage detector, see **CHAPTER 20 POWER-ON-CLEAR CIRCUIT** and **CHAPTER 21 LOW-VOLTAGE DETECTOR**.

Table 19-1. Operation Statuses During Reset Period

Item			During Reset Period
System clock			Clock supply to the CPU is stopped.
	Main system clock	f_{IH}, f_{IH40}	Operation stopped
		f_X	Operation stopped (X1 and X2 pins are input port mode)
		f_{EX}	Clock input invalid (pin is input port mode)
	Subsystem clock	f_{XT}	Operation stopped (XT1 and XT2 pins are input port mode)
	f_{IL}		Operation stopped
CPU			
Flash memory			
RAM			Operation stopped (The value, however, is retained when the voltage is at least the power-on-clear detection voltage.)
Port (latch)			Set P140 to low-level output. The port pins except for P140 become high impedance.
Timer array unit TAUS			Operation stopped
Real-time counter (RTC)			
Watchdog timer			
Clock output/buzzer output			
A/D converter			
Programmable gain amplifier			
Comparator			
Serial array unit (SAU)			
Serial interface (IICA)			
Multiplier/divider			
DMA controller			
Power-on-clear function			Detection operation is possible
Low-voltage detection function			Operation stopped (however, operation continues at LVI reset)
External interrupt			Operation stopped

Remarks 1. f_{IH} : Internal high-speed oscillation clock
f_{IH40} : 40 MHz internal high-speed oscillation clock
f_X : X1 clock
f_{EX} : External main system clock
f_{XT} : XT1 clock
f_{IL} : Internal low-speed oscillation clock

2. The functions mounted depend on the product. See **1.6 Block Diagram** and **1.7 Outline of Functions**.

Table 19-2. Hardware Statuses After Reset Acknowledgment (1/4)

Hardware		After Reset Acknowledgment[Note 1]
Program counter (PC)		The contents of the reset vector table (0000H, 0001H) are set.
Stack pointer (SP)		Undefined
Program status word (PSW)		06H
RAM	Data memory	Undefined[Note 2]
	General-purpose registers	Undefined[Note 2]
Processor mode control register (PMC)		00H
Port registers (P0 to P8, P12, P14, P15) (output latches)		00H
Port mode registers	PM0 to PM8, PM12, PM15	FFH
	PM14	FEH
Port input mode registers (PIM3, PIM7, PIM8)		00H
Port output mode registers (POM3, POM7)		00H
Pull-up resistor option registers (PU0, PU1, PU3 to PU5, PU7, PU12, PU14)		00H
Clock operation mode control register (CMC)		00H
Clock operation status control register (CSC)		C0H
System clock control register (CKC)		09H
40 MHz internal high-speed oscillation control register (DSCCTL)		00H
Oscillation stabilization time counter status register (OSTC)		00H
Oscillation stabilization time select register (OSTS)		07H
Noise filter enable registers 0, 1, 2 (NFEN0, NFEN1, NFEN2)		00H
Peripheral enable registers 0, 1, 2 (PER0, PER1, PER2)		00H
Operation speed mode control register (OSMC)		00H
Timer array unit (TAUS)	Timer data registers 00, 01, 02, 03, 04, 05, 06, 07, 08, 09, 10, 11 (TDR00, TDR01, TDR02, TDR03, TDR04, TDR05, TDR06, TDR07, TDR08, TDR09, TDR10, TDR11)	0000H
	Timer mode registers 00, 01, 02, 03, 04, 05, 06, 07, 08, 09, 10, 11 (TMR00, TMR01, TMR02, TMR03, TMR04, TMR05, TMR06, TMR07, TMR08, TMR09, TMR10, TMR11)	0000H
	Timer status registers 00, 01, 02, 03, 04, 05, 06, 07, 08, 09, 10, 11 (TSR00, TSR01, TSR02, TSR03, TSR04, TSR05, TSR06, TSR07, TSR08, TSR09, TSR10, TSR11)	0000H
	Timer input select register 0 (TIS0)	00H
	Timer counter registers 00, 01, 02, 03, 04, 05, 06, 07, 08, 09, 10, 11 (TCR00, TCR01, TCR02, TCR03, TCR04, TCR05, TCR06, TCR07, TCR08, TCR09, TCR10, TCR11)	FFFFH
	Timer channel enable status register 0 (TE0)	0000H
	Timer channel start register 0 (TS0)	0000H
	Timer channel stop register 0 (TT0)	0000H
	Timer clock select 0 (TPS0)	0000H
	Timer output register 0 (TO0)	0000H
	Timer output enable register 0 (TOE0)	0000H
	Timer output level register 0 (TOL0)	0000H

Notes 1. During reset signal generation or oscillation stabilization time wait, only the PC contents among the hardware statuses become undefined. All other hardware statuses remain unchanged after reset.

2. When a reset is executed in the standby mode, the pre-reset status is held even after reset.

Remark The special function register (SFR) mounted depend on the product. See **3.2.4 Special function registers (SFRs)** and **3.2.5 Extended special function registers (2nd SFRs: 2nd Special Function Registers)**.

Table 19-2. Hardware Statuses After Reset Acknowledgment (2/4)

Hardware		Status After Reset Acknowledgment[Note 1]
Timer array unit (TAUS)	Timer output mode register 0 (TOM0)	0000H
	Timer triangle wave output mode register 0 (TOT0)	0000H
	Timer real-time output enable register 0 (TRE0)	0000H
	Timer real-time output register 0 (TRO0)	0000H
	Timer real-time control register 0 (TRC0)	0000H
	Timer modulation output enable register 0 (TME0)	0000H
	Timer dead time output enable register 0 (TDE0)	0000H
	TAU option mode register (OPMR)	0000H
	TAU option status register (OPSR)	0000H
	TAU option Hi-Z start trigger register (OPHS)	0000H
	TAU option Hi-Z stop trigger register (OPHT)	0000H
	TAU option control register (OPCR)	0000H
Real-time counter	Sub-count register (RSUBC)	0000H
	Second count register (SEC)	00H
	Minute count register (MIN)	00H
	Hour count register (HOUR)	12H
	Week count register (WEEK)	00H
	Day count register (DAY)	01H
	Month count register (MONTH)	01H
	Year count register (YEAR)	00H
	Watch error correction register (SUBCUD)	00H
	Alarm minute register (ALARMWM)	00H
	Alarm hour register (ALARMWH)	12H
	Alarm week register ALARMWW)	00H
	Real-time counter control register 0 (RTCC0)	00H
	Real-time counter control register 1 (RTCC1)	00H
	Real-time counter control register 2 (RTCC2)	00H
Watchdog timer	Enable register (WDTE)	1AH/9AH[Note 2]
Clock output/buzzer output controller	Clock output select registers 0, 1 (CKS0, CKS1)	00H
A/D converter	10-bit A/D conversion result register (ADCR)	0000H
	8-bit A/D conversion result register (ADCRH)	00H
	Mode register (ADM)	00H
	Mode register 1 (ADM1)	00H
	Analog input channel specification register (ADS)	00H
	A/D port configuration register (ADPC)	10H

Notes 1. During reset signal generation or oscillation stabilization time wait, only the PC contents among the hardware statuses become undefined. All other hardware statuses remain unchanged after reset.

2. When a reset is executed in the standby mode, the pre-reset status is held even after reset.

Remark The special function register (SFR) mounted depend on the product. See **3.2.4 Special function registers (SFRs)** and **3.2.5 Extended special function registers (2nd SFRs: 2nd Special Function Registers)**.

Table 19-2. Hardware Statuses After Reset Acknowledgment (3/4)

Hardware		Status After Reset Acknowledgment[Note]
Serial array unit (SAU)	Serial data registers 00, 01, 02, 03 (SDR00, SDR01, SDR02, SDR03)	0000H
	Serial status registers 00, 01, 02, 03 (SSR00, SSR01, SSR02, SSR03)	0000H
	Serial flag clear trigger registers 00, 01, 02, 03 (SIR00, SIR01, SIR02, SIR03)	0000H
	Serial mode registers 00, 01, 02, 03 (SMR00, SMR01, SMR02, SMR03)	0020H
	Serial communication operation setting registers 00, 01, 02, 03 (SCR00, SCR01, SCR02, SCR03)	0087H
	Serial channel enable status register 0 (SE0)	0000H
	Serial channel start register 0 (SS0)	0000H
	Serial channel stop register 0 (ST0)	0000H
	Serial clock select register 0 (SPS0)	0000H
	Serial output register 0 (SO0)	0F0FH
	Serial output enable register 0 (SOE0)	0000H
	Serial output level register 0 (SOL0)	0000H
	Input switch control register (ISC)	00H
Serial interface IICA	IICA shift register (IICA)	00H
	IICA status register (IICS)	00H
	IICA flag register (IICF)	00H
	IICA control register 0 (IICCTL0)	00H
	IICA control register 1 (IICCTL1)	00H
	IICA low-level width setting register (IICWL)	FFH
	IICA high-level width setting register (IICWH)	FFH
	Slave address register (SVA)	00H
Multiplier/divider	Multiplication/division data register A (L) (MDAL)	0000H
	Multiplication/division data register A (H) (MDAH)	0000H
	Multiplication/division data register B (L) (MDBL)	0000H
	Multiplication/division data register B (H) (MDBH)	0000H
	Multiplication/division data register C (L) (MDCL)	0000H
	Multiplication/division data register C (H) (MDCH)	0000H
	Multiplication/division control register (MDUC)	00H

Note During reset signal generation or oscillation stabilization time wait, only the PC contents among the hardware statuses become undefined. All other hardware statuses remain unchanged after reset.

Remark The special function register (SFR) mounted depend on the product. See **3.2.4 Special function registers (SFRs)** and **3.2.5 Extended special function registers (2nd SFRs: 2nd Special Function Registers)**.

Table 19-2. Hardware Statuses After Reset Acknowledgment (4/4)

Hardware		Status After Reset Acknowledgment[Note 1]
Reset function	Reset control flag register (RESF)	00H[Note 2]
Low-voltage detector	Low-voltage detection register (LVIM)	00H[Note 3]
	Low-voltage detection level select register (LVIS)	0EH[Note 2]
Regulator	Regulator mode control register (RMC)	00H
DMA controller	SFR address registers 0, 1 (DSA0, DSA1)	00H
	RAM address registers 0L, 0H, 1L, 1H (DRA0L, DRA0H, DRA1L, DRA1H)	00H
	Byte count registers 0L, 0H, 1L, 1H (DBC0L, DBC0H, DBC1L, DBC1H)	00H
	Mode control registers 0, 1 (DMC0, DMC1)	00H
	Operation control registers 0, 1 (DRC0, DRC1)	00H
Interrupt	Request flag registers 0L, 0H, 1L, 1H, 2L, 2H (IF0L, IF0H, IF1L, IF1H, IF2L, IF2H)	00H
	Mask flag registers 0L, 0H, 1L, 1H, 2L, 2H (MK0L, MK0H, MK1L, MK1H, MK2L, MK2H)	FFH
	Priority specification flag registers 00L, 00H, 01L, 01H, 02L, 02H, 10L, 10H, 11L, 11H, 12L, 12H (PR00L, PR00H, PR01L, PR01H, PR10L, PR10H, PR11L, PR11H, PR02L, PR02H, PR12L, PR12H)	FFH
	External interrupt rising edge enable register 0 (EGP0)	00H
	External interrupt falling edge enable register 0 (EGN0)	00H
Programmable gain amplifier amplifier	Programmable gain amplifier control register (OAM)	00H
Comparator	Comparator 0 control register (C0CTL)	00H
	Comparator 0 internal reference voltage setting register (C0RVM)	00H
	Comparator 1 control register (C1CTL)	00H
	Comparator 1 internal reference voltage setting register (C1RVM)	00H
BCD correction circuit	BCD correction result register (BCDADJ)	Undefined

Notes 1. During reset signal generation or oscillation stabilization time wait, only the PC contents among the hardware statuses become undefined. All other hardware statuses remain unchanged after reset.

2. These values vary depending on the reset source.

Reset Source / Register		$\overline{\text{RESET}}$ Input	Reset by POC	Reset by Execution of Illegal Instruction	Reset by WDT	Reset by INIRF	Reset by LVI
RESF	TRAP bit	Cleared (0)	Cleared (0)	Set (1)	Held	Held	Held
	WDRF bit			Held	Set (1)	Held	Held
	INIRF bit			Held	Held	Set (1)	Held
	LVIRF bit			Held	Held	Held	Set (1)
LVIS		Cleared (0EH)	Cleared (0EH)	Cleared (0EH)	Cleared (0EH)	Cleared (0EH)	Held

3. This value varies depending on the reset source and the option byte.

Remark The special function register (SFR) mounted depend on the product. See **3.2.4 Special function registers (SFRs)** and **3.2.5 Extended special function registers (2nd SFRs: 2nd Special Function Registers)**.

19.1 Register for Confirming Reset Source

Many internal reset generation sources exist in the 78K0R/Ix3. The reset control flag register (RESF) is used to store which source has generated the reset request.

RESF can be read by an 8-bit memory manipulation instruction.

$\overline{\text{RESET}}$ input, reset by power-on-clear (POC) circuit, and reading RESF clear TRAP, WDRF, INIRF and LVIRF.

Figure 19-5. Format of Reset Control Flag Register (RESF)

Address: FFFA8H After reset: 00H[Note 1] R

Symbol	7	6	5	4	3	2	1	0
RESF	TRAP	0	0	WDRF	0	0	INIRF	LVIRF

TRAP	Internal reset request by execution of illegal instruction[Note 2]
0	Internal reset request is not generated, or RESF is cleared.
1	Internal reset request is generated.

WDRF	Internal reset request by watchdog timer (WDT)
0	Internal reset request is not generated, or RESF is cleared.
1	Internal reset request is generated.

INIRF	Internal reset request by a reset processing check error
0	Internal reset request is not generated, or RESF is cleared.
1	Internal reset request is generated.

LVIRF	Internal reset request by low-voltage detector (LVI)
0	Internal reset request is not generated, or RESF is cleared.
1	Internal reset request is generated.

Notes 1. The value after reset varies depending on the reset source.

2. The illegal instruction is generated when instruction code FFH is executed.
Reset by the illegal instruction execution not issued by emulation with the in-circuit emulator or on-chipdebug emulator.

Caution Do not read data by a 1-bit memory manipulation instruction.

The status of RESF when a reset request is generated is shown in Table 19-3.

Table 19-3. RESF Status When Reset Request Is Generated

Reset Source / Flag	$\overline{\text{RESET}}$ Input	Reset by POC	Reset by Execution of Illegal Instruction	Reset by WDT	Reset by INIRF	Reset by LVI
TRAP bit	Cleared (0)	Cleared (0)	Set (1)	Held	Held	Held
WDRF bit			Held	Set (1)	Held	Held
INIRF bit			Held	Held	Set (1)	Held
LVIRF bit			Held	Held	Held	Set (1)

CHAPTER 20 POWER-ON-CLEAR CIRCUIT

20.1 Functions of Power-on-Clear Circuit

The power-on-clear circuit (POC) has the following functions.

- Generates internal reset signal at power on.
  The reset signal is released when the supply voltage (V_{DD}) exceeds 1.61 V ±0.09 V.

- Compares supply voltage (V_{DD}) and detection voltage (V_{PDR} = 1.59 V ±0.09 V), generates internal reset signal when $V_{DD} < V_{PDR}$.

Caution **If an internal reset signal is generated in the POC circuit, TRAP, WDRF, INIRF and LVIRF of the reset control flag register (RESF) is cleared.**

Remark This product incorporates multiple hardware functions that generate an internal reset signal. A flag that indicates the reset source is located in the reset control flag register (RESF) for when an internal reset signal is generated by the watchdog timer (WDT), low-voltage-detector (LVI), or illegal instruction execution. RESF is not cleared to 00H and the flag is set to 1 when an internal reset signal is generated by WDT or LVI.
For details of RESF, see **CHAPTER 19 RESET FUNCTION**.

20.2 Configuration of Power-on-Clear Circuit

The block diagram of the power-on-clear circuit is shown in Figure 20-1.

Figure 20-1. Block Diagram of Power-on-Clear Circuit

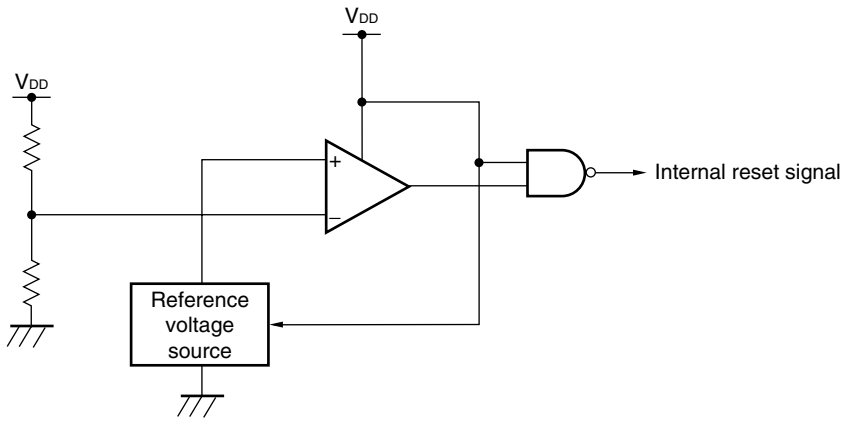

20.3 Operation of Power-on-Clear Circuit

- An internal reset signal is generated on power application. When the supply voltage (V_{DD}) exceeds the detection voltage (V_{PDR} = 1.61 V ±0.09 V), the reset status is released.

- The supply voltage (V_{DD}) and detection voltage (V_{PDR} = 1.59 V ±0.09 V) are compared. When $V_{DD} < V_{PDR}$, the internal reset signal is generated.

The timing of generation of the internal reset signal by the power-on-clear circuit and low-voltage detector is shown below.

Figure 20-2. Timing of Generation of Internal Reset Signal by Power-on-Clear Circuit and Low-Voltage Detector

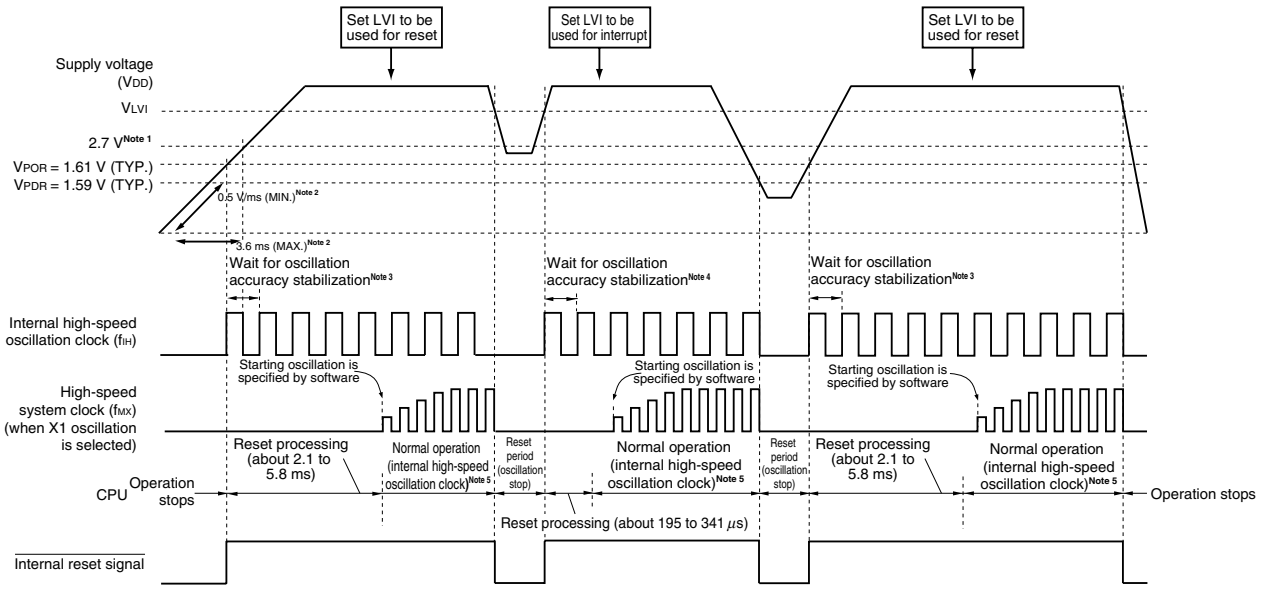

Notes 1. The operation guaranteed range is 2.7 V ≤ V_{DD} ≤ 5.5 V. Make sure to perform normal operation after the supply voltage has become at least 2.7 V. To make the state at lower than 2.7 V reset state when the supply voltage falls, use the reset function of the low-voltage detector, or input the low level to the $\overline{\text{RESET}}$ pin.

2. Set so that no more than 3.6 ms elapses between when power is applied and when the voltage reaches 2.7 V. If more time is required (if the voltage needs to rise more slowly than the 0.5 V/ms (MIN.) rating), be sure to input a low level to the $\overline{\text{RESET}}$ pin before the voltage reaches 2.7 V after power application(For supply voltage rise time timing and power supply voltage rise inclination, see **CHAPTER 28 ELECTRICAL SPECIFICATIONS**).

3. The reset processing time, such as when waiting for internal voltage stabilization, includes the oscillation accuracy stabilization time of the internal high-speed oscillation clock.

4. The internal reset processing time includes the oscillation accuracy stabilization time of the internal high-speed oscillation clock.

5. The internal high-speed oscillation clock and a high-speed system clock or subsystem clock Note 6 can be selected as the CPU clock. To use the X1 clock, use the OSTC register to confirm the lapse of the oscillation stabilization time. To use the XT1 clock Note 6, use the timer function for confirmation of the lapse of the stabilization time.

6. The 78K0R/IB3 doesn't have the subsystem clock (XT clock).

Caution Set the low-voltage detector by software after the reset status is released (see CHAPTER 21 LOW-VOLTAGE DETECTOR).

Remark V_{LVI}: LVI detection voltage
V_{POR}: POC power supply rise detection voltage
V_{PDR}: POC power supply fall detection voltage

20.4 Cautions for Power-on-Clear Circuit

In a system where the supply voltage (V_{DD}) fluctuates for a certain period in the vicinity of the POC detection voltage (V_{POR}, V_{PDR}), the system may be repeatedly reset and released from the reset status. In this case, the time from release of reset to the start of the operation of the microcontroller can be arbitrarily set by taking the following action.

<Action>

After releasing the reset signal, wait for the supply voltage fluctuation period of each system by means of a software counter that uses a timer, and then initialize the ports.

Figure 20-3. Example of Software Processing After Reset Release (1/2)

• If supply voltage fluctuation is 50 ms or less in vicinity of POC detection voltage

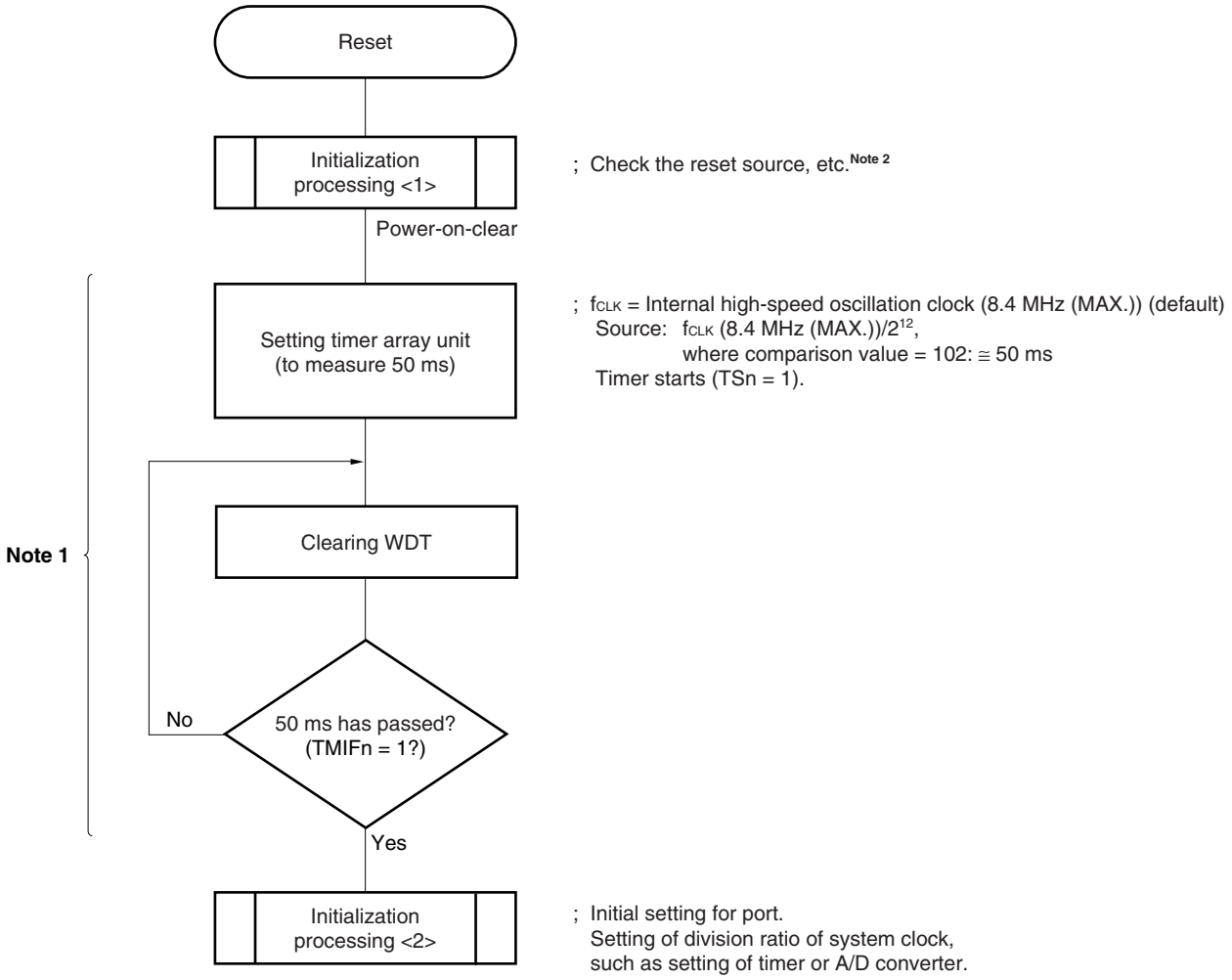

Notes 1. If reset is generated again during this period, initialization processing <2> is not started.

2. A flowchart is shown on the next page.

Remark n = 00 to 11

Figure 20-3. Example of Software Processing After Reset Release (2/2)

• Checking reset source

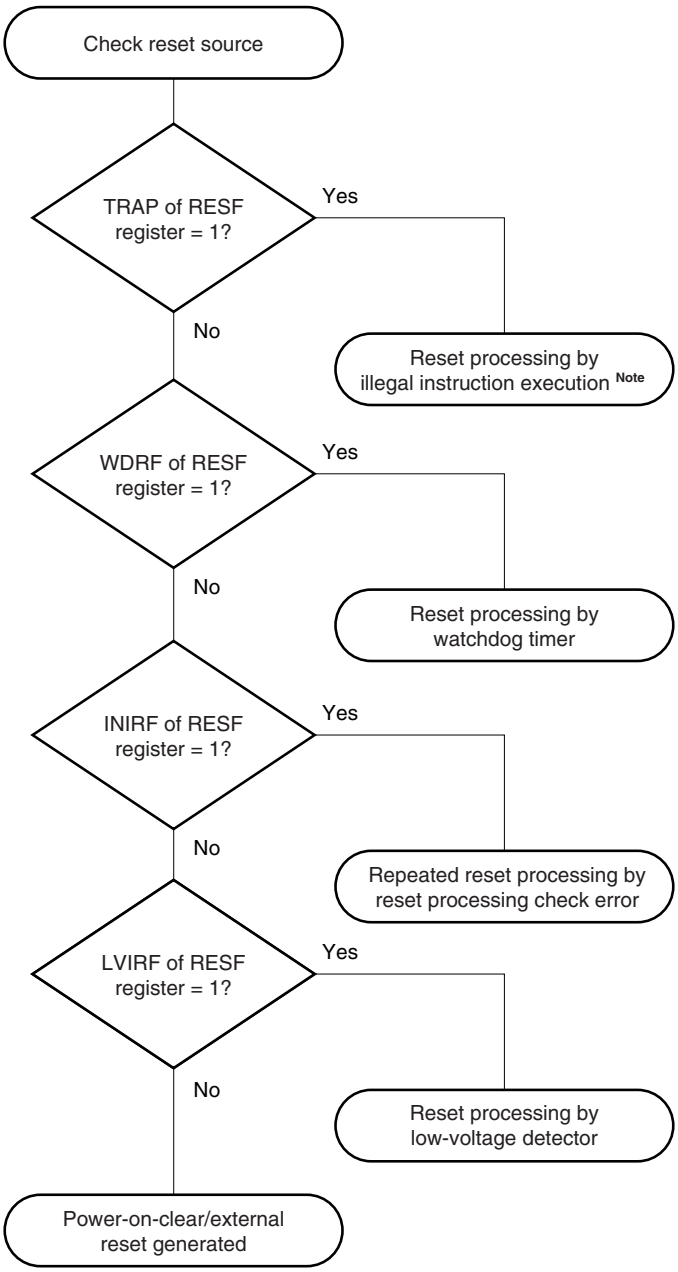

Note The illegal instruction is generated when instruction code FFH is executed.
Reset by the illegal instruction execution not issued by emulation with the in-circuit emulator or on-chip debug emulator.

CHAPTER 21 LOW-VOLTAGE DETECTOR

21.1 Functions of Low-Voltage Detector

The low-voltage detector (LVI) has the following functions.

- The LVI circuit compares the supply voltage (V_{DD}) with the detection voltage (V_{LVI}) or the input voltage from an external input pin (EXLVI) with the detection voltage (V_{EXLVI} = 1.21 V ±0.1 V), and generates an internal reset or internal interrupt signal.
- The supply voltage (V_{DD}) or the input voltage from the external input pin (EXLVI) can be selected to be detected by software.
- A reset or an interrupt can be selected to be generated after detection by software.
- Detection levels (V_{LVI},10 levels) of supply voltage can be changed by software.
- Operable in STOP mode.

The reset and interrupt signals are generated as follows depending on selection by software.

Selection of Level Detection of Supply Voltage (V_{DD}) (LVISEL = 0)		Selection Level Detection of Input Voltage from External Input Pin (EXLVI) (LVISEL = 1)	
Selects reset (LVIMD = 1).	Selects interrupt (LVIMD = 0).	Selects reset (LVIMD = 1).	Selects interrupt (LVIMD = 0).
Generates an internal reset signal when $V_{DD} < V_{LVI}$ and releases the reset signal when $V_{DD} \geq V_{LVI}$.	Generates an internal interrupt signal when V_{DD} drops lower than V_{LVI} ($V_{DD} < V_{LVI}$) or when V_{DD} becomes V_{LVI} or higher ($V_{DD} \geq V_{LVI}$).	Generates an internal reset signal when EXLVI < V_{EXLVI} and releases the reset signal when EXLVI ≥ V_{EXLVI}.	Generates an internal interrupt signal when EXLVI drops lower than V_{EXLVI} (EXLVI < V_{EXLVI}) or when EXLVI becomes V_{EXLVI} or higher (EXLVI ≥ V_{EXLVI}).

Remark LVISEL: Bit 2 of low-voltage detection register (LVIM)
LVIMD: Bit 1 of LVIM

While the low-voltage detector is operating, whether the supply voltage or the input voltage from an external input pin is more than or less than the detection level can be checked by reading the low-voltage detection flag (LVIF: bit 0 of LVIM).

When the low-voltage detector is used to reset, bit 0 (LVIRF) of the reset control flag register (RESF) is set to 1 if reset occurs. For details of RESF, see **CHAPTER 19 RESET FUNCTION**.

21.2 Configuration of Low-Voltage Detector

The block diagram of the low-voltage detector is shown in Figure 21-1.

Figure 21-1. Block Diagram of Low-Voltage Detector

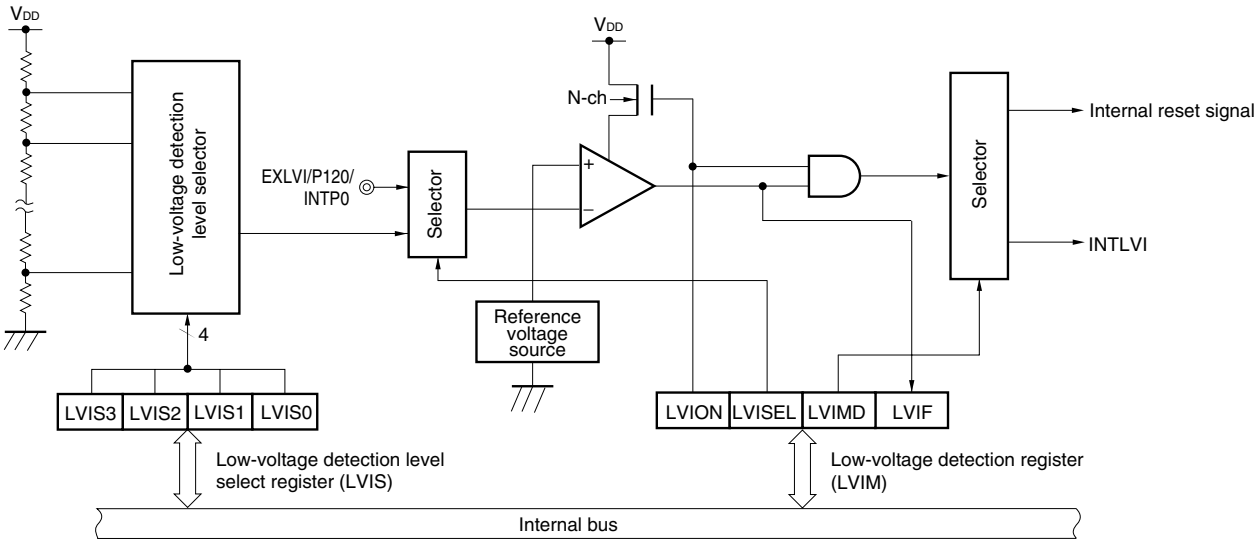

21.3 Registers Controlling Low-Voltage Detector

The low-voltage detector is controlled by the following registers.

- Low-voltage detection register (LVIM)
- Low-voltage detection level select register (LVIS)
- Port mode register 12 (PM12)

(1) Low-voltage detection register (LVIM)

This register sets low-voltage detection and the operation mode.

This register can be set by a 1-bit or 8-bit memory manipulation instruction.

Reset signal generation clears this register to 00H.

Figure 21-2. Format of Low-Voltage Detection Register (LVIM)

Address: FFFA9H After reset: 00H[Note 1] R/W[Note 2]

Symbol	<7>	6	5	4	3	<2>	<1>	<0>
LVIM	LVION	0	0	0	0	LVISEL	LVIMD	LVIF

LVION[Notes 3, 4]	Enables low-voltage detection operation
0	Disables operation
1	Enables operation

LVISEL[Note 3]	Voltage detection selection
0	Detects level of supply voltage (V_{DD})
1	Detects level of input voltage from external input pin (EXLVI)

LVIMD	Low-voltage detection operation mode (interrupt/reset) selection
0	• LVISEL = 0: Generates an internal interrupt signal when the supply voltage (V_{DD}) drops lower than the detection voltage (V_{LVI}) ($V_{DD} < V_{LVI}$) or when V_{DD} becomes V_{LVI} or higher ($V_{DD} \geq V_{LVI}$). • LVISEL = 1: Generates an interrupt signal when the input voltage from an external input pin (EXLVI) drops lower than the detection voltage (V_{EXLVI}) (EXLVI < V_{EXLVI}) or when EXLVI becomes V_{EXLVI} or higher (EXLVI ≥ V_{EXLVI}).
1	• LVISEL = 0: Generates an internal reset signal when the supply voltage (V_{DD}) < detection voltage (V_{LVI}) and releases the reset signal when $V_{DD} \geq V_{LVI}$. • LVISEL = 1: Generates an internal reset signal when the input voltage from an external input pin (EXLVI) < detection voltage (V_{EXLVI}) and releases the reset signal when EXLVI ≥ V_{EXLVI}.

LVIF	Low-voltage detection flag
0	• LVISEL = 0: Supply voltage (V_{DD}) ≥ detection voltage (V_{LVI}), or when LVI operation is disabled • LVISEL = 1: Input voltage from external input pin (EXLVI) ≥ detection voltage (V_{EXLVI}), or when LVI operation is disabled
1	• LVISEL = 0: Supply voltage (V_{DD}) < detection voltage (V_{LVI}) • LVISEL = 1: Input voltage from external input pin (EXLVI) < detection voltage (V_{EXLVI})

Notes 1. The reset value changes depending on the reset source and the setting of the option byte. This register is not cleared (00H) by LVI reset.

2. Bit 0 is read-only.

3. LVION, LVIMD, and LVISEL are cleared to 0 in the case of a reset other than an LVI reset. These are not cleared to 0 in the case of an LVI reset.

4. When LVION is set to 1, operation of the comparator in the LVI circuit is started. Use software to wait for the following periods of time, between when LVION is set to 1 and when the voltage is confirmed with LVIF.

- Operation stabilization time (10 μs (MAX.))
- Minimum pulse width (200 μs (MIN.))

The LVIF value for these periods may be set/cleared regardless of the voltage level, and can therefore not be used. Also, the LVIIF interrupt request flag may be set to 1 in these periods.

Cautions 1. To stop LVI, be sure to clear (0) LVION by using a 1-bit memory manipulation instruction.

2. Input voltage from external input pin (EXLVI) must be EXLVI < V_{DD}.

3. When LVI is used in interrupt mode (LVIMD = 0) and LVISEL is set to 0, an interrupt request signal (INTLVI) that disables LVI operation (clears LVION) when the supply voltage (V_{DD}) is less than or equal to the detection voltage (V_{LVI}) (if LVISEL = 1, input voltage of external input pin (EXLVI) is less than or equal to the detection voltage (V_{EXLVI})) is generated and LVIIF may be set to 1.

4. To read LVIM after writing this register, secure the time of one or more clock.

(2) Low-voltage detection level select register (LVIS)

This register selects the low-voltage detection level.

This register can be set by a 1-bit or 8-bit memory manipulation instruction.

Reset signal generation input sets this register to 0EH.

Figure 21-3. Format of Low-Voltage Detection Level Select Register (LVIS)

Address: FFFAAH After reset: 0EH[Note] R/W

Symbol	7	6	5	4	3	2	1	0
LVIS	0	0	0	0	LVIS3	LVIS2	LVIS1	LVIS0

LVIS3	LVIS2	LVIS1	LVIS0	Detection level
0	0	0	0	V_{LVI0} (4.22 ±0.1 V)
0	0	0	1	V_{LVI1} (4.07 ±0.1 V)
0	0	1	0	V_{LVI2} (3.92 ±0.1 V)
0	0	1	1	V_{LVI3} (3.76 ±0.1 V)
0	1	0	0	V_{LVI4} (3.61 ±0.1 V)
0	1	0	1	V_{LVI5} (3.45 ±0.1 V)
0	1	1	0	V_{LVI6} (3.30 ±0.1 V)
0	1	1	1	V_{LVI7} (3.15 ±0.1 V)
1	0	0	0	V_{LVI8} (2.99 ±0.1 V)
1	0	0	1	V_{LVI9} (2.84 ±0.1 V)
Other than above				Setting prohibited

Note The reset value changes depending on the reset source.
If the LVIS register is reset by LVI, it is not reset but holds the current value. The value of this register is reset to “0EH” if a reset other than by LVI is effected.

Caution 1. Be sure to clear bits 4 to 7 to “0”.

Cautions 2. Change the LVIS value with either of the following methods.

- **When changing the value after stopping LVI**
  - **<1> Stop LVI (LVION = 0).**
  - **<2> Change the LVIS register.**
  - **<3> Set to the mode used as an interrupt (LVIMD = 0).**
  - **<4> Mask LVI interrupts (LVIMK = 1).**
  - **<5> Enable LVI operation (LVION = 1).**
  - **<6> Before cancelling the LVI interrupt mask (LVIMK = 0), clear it with software because an LVIIF flag may be set when LVI operation is enabled.**
- **When changing the value after setting to the mode used as an interrupt (LVIMD = 0)**
  - **<1> Mask LVI interrupts (LVIMK = 1).**
  - **<2> Set to the mode used as an interrupt (LVIMD = 0).**
  - **<3> Change the LVIS register.**
  - **<4> Before cancelling the LVI interrupt mask (LVIMK = 0), clear it with software because an LVIIF flag may be set when the LVIS register is changed.**

3. When an input voltage from the external input pin (EXLVI) is detected, the detection voltage (V_{EXLVI}) is fixed. Therefore, setting of LVIS is not necessary.

4. To read LVIS after writing this register, secure the time of one or more clock.

(3) Port mode register 12 (PM12)

When using the P120/EXLVI/INTP0 pin for external low-voltage detection potential input, set PM120 to 1. At this time, the output latch of P120 may be 0 or 1.

PM12 can be set by a 1-bit or 8-bit memory manipulation instruction.

Reset signal generation sets this register to FFH.

Figure 21-4. Format of Port Mode Register 12 (PM12)

Address: FFF2CH After reset: FFH R/W

Symbol	7	6	5	4	3	2	1	0
PM12	1	1	1	1	1	1	1	PM120

PM120	P120 pin I/O mode selection
0	Output mode (output buffer on)
1	Input mode (output buffer off)

21.4 Operation of Low-Voltage Detector

The low-voltage detector can be used in the following two modes.

(1) Used as reset (LVIMD = 1)

- If LVISEL = 0, compares the supply voltage (V_{DD}) and detection voltage (V_{LVI}), generates an internal reset signal when $V_{DD} < V_{LVI}$, and releases internal reset when $V_{DD} \geq V_{LVI}$.
- If LVISEL = 1, compares the input voltage from external input pin (EXLVI) and detection voltage (V_{EXLVI}), generates an internal reset signal when EXLVI < V_{EXLVI}, and releases internal reset when EXLVI ≥ V_{EXLVI}.

(2) Used as interrupt (LVIMD = 0)

- If LVISEL = 0, compares the supply voltage (V_{DD}) and detection voltage (V_{LVI}). When V_{DD} drops lower than V_{LVI} ($V_{DD} < V_{LVI}$) or when V_{DD} becomes V_{LVI} or higher ($V_{DD} \geq V_{LVI}$), generates an interrupt signal (INTLVI).
- If LVISEL = 1, compares the input voltage from external input pin (EXLVI) and detection voltage (V_{EXLVI} = 1.21 V ±0.1 V). When EXLVI drops lower than V_{EXLVI} (EXLVI < V_{EXLVI}) or when EXLVI becomes V_{EXLVI} or higher (EXLVI ≥ V_{EXLVI}), generates an interrupt signal (INTLVI).

While the low-voltage detector is operating, whether the supply voltage or the input voltage from an external input pin is more than or less than the detection level can be checked by reading the low-voltage detection flag (LVIF: bit 0 of LVIM).

Remark LVIMD: Bit 1 of low-voltage detection register (LVIM)
LVISEL: Bit 2 of LVIM

21.4.1 When used as reset

(1) When detecting level of supply voltage (V_{DD})

- When starting operation
  - <1> Mask the LVI interrupt (LVIMK = 1).
  - <2> Clear bit 2 (LVISEL) of the low-voltage detection register (LVIM) to 0 (detects level of supply voltage (V_{DD})) (default value).
  - <3> Set the detection voltage using bits 3 to 0 (LVIS3 to LVIS0) of the low-voltage detection level selection register (LVIS).
  - <4> Set bit 7 (LVION) of LVIM to 1 (enables LVI operation).

<5> Use software to wait for the following periods of time (Total 210 μs).
- Operation stabilization time (10 μs (MAX.))
- Minimum pulse width (200 μs (MIN.))

<6> Wait until it is checked that (supply voltage (V_{DD}) ≥ detection voltage (V_{LVI})) by bit 0 (LVIF) of LVIM.

<7> Set bit 1 (LVIMD) of LVIM to 1 (generates reset when the level is detected).

Figure 21-5 shows the timing of the internal reset signal generated by the low-voltage detector. The numbers in this timing chart correspond to <1> to <7> above.

Cautions 1. Be sure to execute <1>. When LVIMK = 0, an interrupt may occur immediately after the processing in <4>.

2. If supply voltage (V_{DD}) ≥ detection voltage (V_{LVI}) when LVIMD is set to 1, an internal reset signal is not generated.

- When stopping operation
  Be sure to clear (0) LVIMD and then LVION by using a 1-bit memory manipulation instruction.

Figure 21-5. Timing of Low-Voltage Detector Internal Reset Signal Generation (Bit: LVISEL = 0)

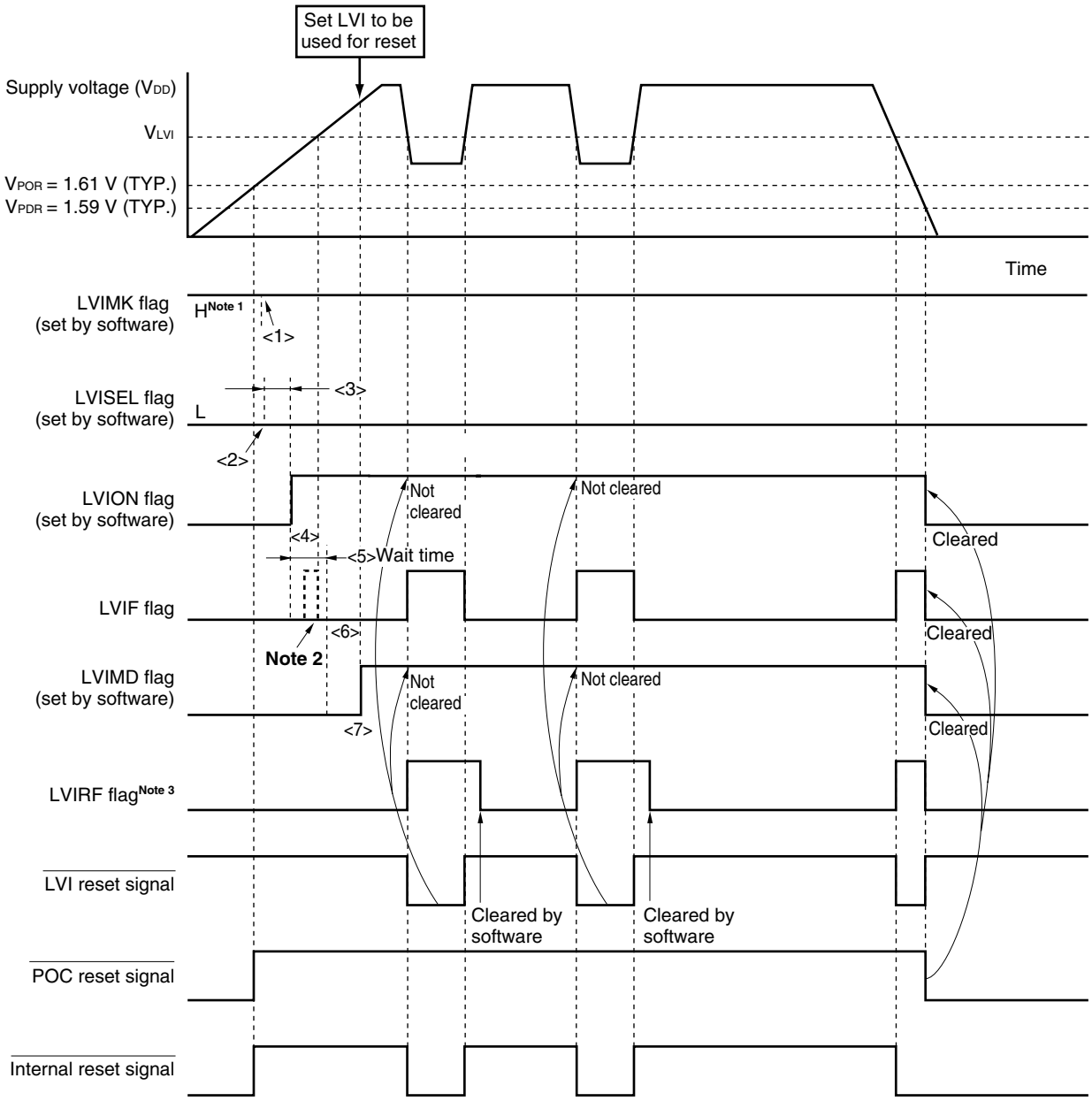

Notes 1. The LVIMK flag is set to "1" by reset signal generation.

2. The LVIIF flag of the interrupt request flag registers and the LVIF flag may be set (1).

3. LVIRF is bit 0 of the reset control flag register (RESF). For details of RESF, see **CHAPTER 19 RESET FUNCTION**.

Remarks 1. <1> to <7> in Figure 21-5 above correspond to <1> to <7> in the description of "When starting operation" in **21.4.1 (1)**.

2. V_{POR}: POC power supply rise detection voltage

V_{PDR}: POC power supply fall detection voltage

(2) When detecting level of input voltage from external input pin (EXLVI)

- When starting operation

  <1> Mask the LVI interrupt (LVIMK = 1).

  <2> Set bit 2 (LVISEL) of the low-voltage detection register (LVIM) to 1 (detects level of input voltage from external input pin (EXLVI)).

  <3> Set bit 7 (LVION) of LVIM to 1 (enables LVI operation).

  <4> Use software to wait for the following periods of time (Total 210 μs).
  - Operation stabilization time (10 μs (MAX.))
  - Minimum pulse width (200 μs (MIN.))

  <5> Wait until it is checked that (input voltage from external input pin (EXLVI) ≥ detection voltage (V_{EXLVI} = 1.21 V (TYP.))) by bit 0 (LVIF) of LVIM.

  <6> Set bit 1 (LVIMD) of LVIM to 1 (generates reset signal when the level is detected).

  Figure 21-6 shows the timing of the internal reset signal generated by the low-voltage detector. The numbers in this timing chart correspond to <1> to <6> above.

  Cautions 1. Be sure to execute <1>. When LVIMK = 0, an interrupt may occur immediately after the processing in <3>.

  2. If input voltage from external input pin (EXLVI) ≥ detection voltage (V_{EXLVI} = 1.21 V (TYP.)) when LVIMD is set to 1, an internal reset signal is not generated.

  3. Input voltage from external input pin (EXLVI) must be EXLVI < V_{DD}.

- When stopping operation

  Be sure to clear (0) LVIMD and then LVION by using a 1-bit memory manipulation instruction.

Figure 21-6. Timing of Low-Voltage Detector Internal Reset Signal Generation (Bit: LVISEL = 1)

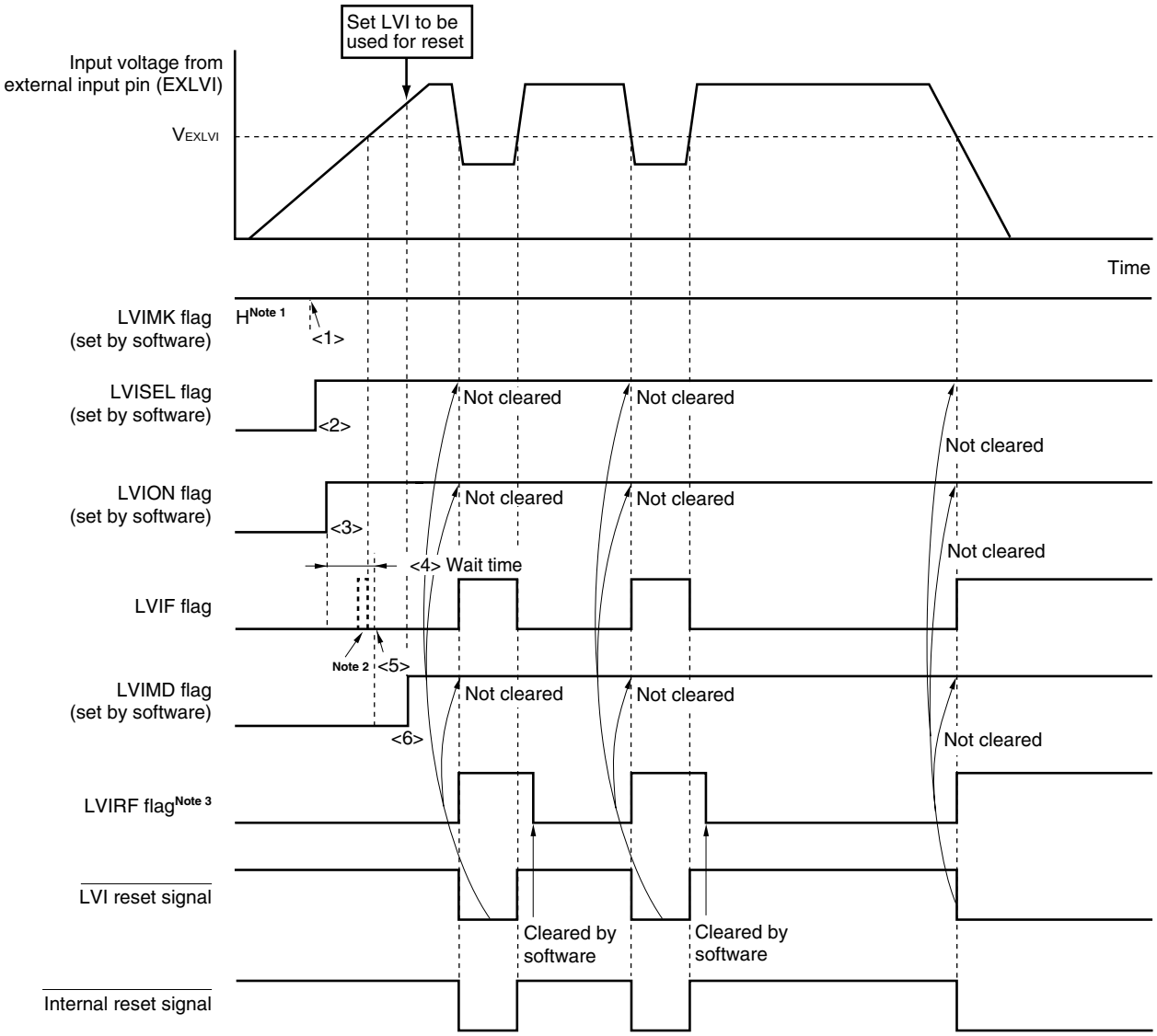

Notes 1. The LVIMK flag is set to "1" by reset signal generation.

2. The LVIIF flag of the interrupt request flag registers and the LVIF flag may be set (1).

3. LVIRF is bit 0 of the reset control flag register (RESF). For details of RESF, see **CHAPTER 19 RESET FUNCTION**.

Remark <1> to <6> in Figure 21-6 above correspond to <1> to <6> in the description of "When starting operation" in **21.4.1 (2) When detecting level of input voltage from external input pin (EXLVI)**.

21.4.2 When used as interrupt

(1) When detecting level of supply voltage (V_{DD})

- When starting operation

  <1> Mask the LVI interrupt (LVIMK = 1).

  <2> Clear bit 2 (LVISEL) of the low-voltage detection register (LVIM) to 0 (detects level of supply voltage (V_{DD})) (default value).
  Clear bit 1 (LVIMD) of LVIM to 0 (generates interrupt signal when the level is detected) (default value).

  <3> Set the detection voltage using bits 3 to 0 (LVIS3 to LVIS0) of the low-voltage detection level selection register (LVIS).

  <4> Set bit 7 (LVION) of LVIM to 1 (enables LVI operation).

  <5> Use software to wait for the following periods of time (Total 210 μs).
  - Operation stabilization time (10 μs (MAX.))
  - Minimum pulse width (200 μs (MIN.))

  <6> Confirm that "supply voltage (V_{DD}) ≥ detection voltage (V_{LVI})" when detecting the falling edge of V_{DD}, or "supply voltage (V_{DD}) < detection voltage (V_{LVI})" when detecting the rising edge of V_{DD}, at bit 0 (LVIF) of LVIM.

  <7> Clear the interrupt request flag of LVI (LVIIF) to 0.

  <8> Release the interrupt mask flag of LVI (LVIMK).

  <9> Execute the EI instruction (when vector interrupts are used).

  Figure 21-7 shows the timing of the interrupt signal generated by the low-voltage detector. The numbers in this timing chart correspond to <1> to <8> above.

- When stopping operation
  Be sure to clear (0) LVION by using a 1-bit memory manipulation instruction.

Figure 21-7. Timing of Low-Voltage Detector Interrupt Signal Generation (Bit: LVISEL = 0)

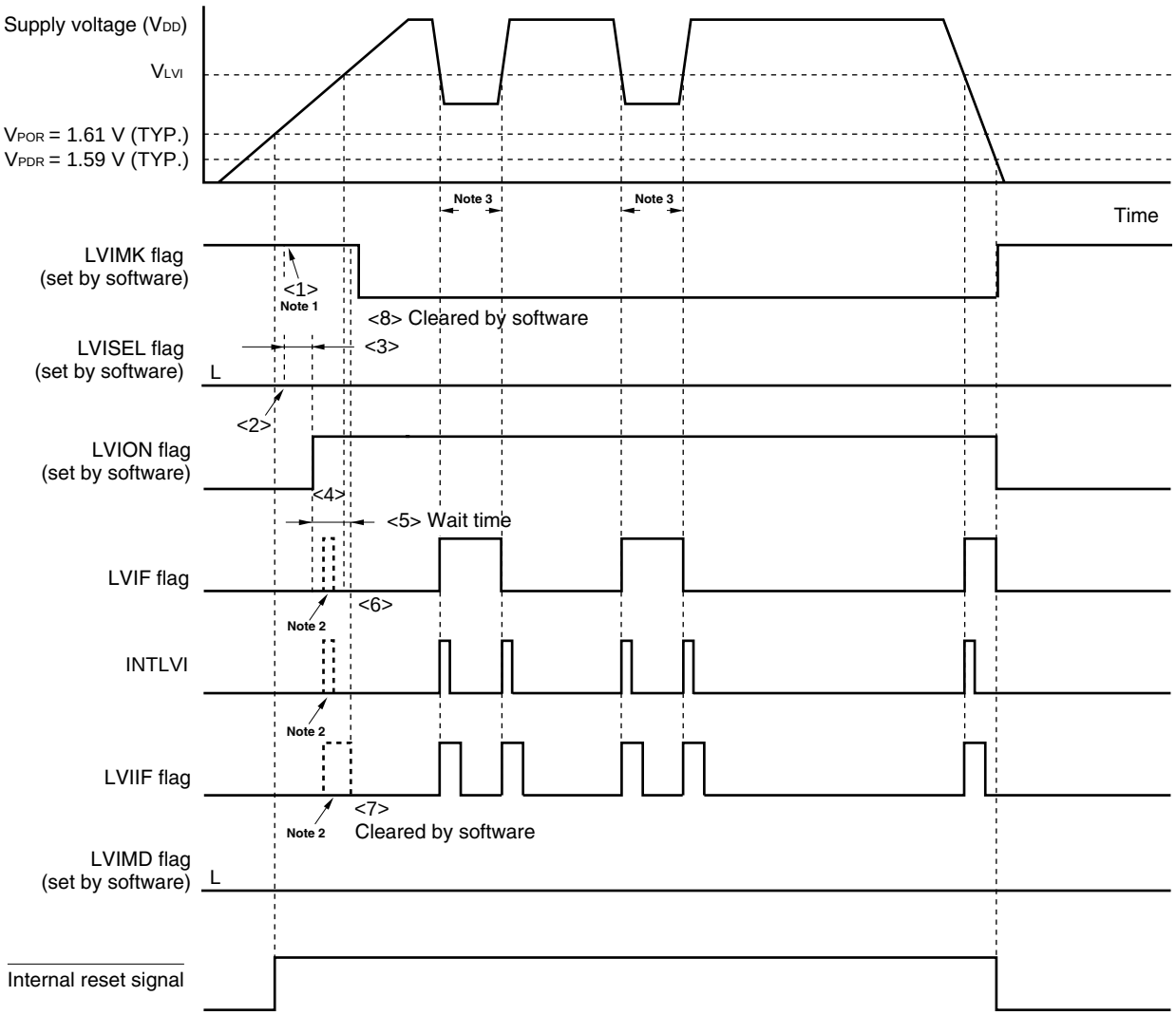

Notes 1. The LVIMK flag is set to “1” by reset signal generation.

2. The interrupt request signal (INTLVI) is generated and the LVIF and LVIIF flags may be set (1).

3. If LVI operation is disabled when the supply voltage (V_{DD}) is less than or equal to the detection voltage (V_{LVI}), an interrupt request signal (INTLVI) is generated and LVIIF may be set to 1.

Remarks 1. <1> to <8> in Figure 21-7 above correspond to <1> to <8> in the description of “When starting operation” in **21.4.2 (1).**

2. V_{POR}: POC power supply rise detection voltage

V_{PDR}: POC power supply fall detection voltage

(2) When detecting level of input voltage from external input pin (EXLVI)

- When starting operation

<1> Mask the LVI interrupt (LVIMK = 1).

<2> Set bit 2 (LVISEL) of the low-voltage detection register (LVIM) to 1 (detects level of input voltage from external input pin (EXLVI)).
Clear bit 1 (LVIMD) of LVIM to 0 (generates interrupt signal when the level is detected) (default value).

<3> Set bit 7 (LVION) of LVIM to 1 (enables LVI operation).

<4> Use software to wait for the following periods of time (Total 210 μs).
- Operation stabilization time (10 μs (MAX.))
- Minimum pulse width (200 μs (MIN.))

<5> Confirm that "input voltage from external input pin (EXLVI) ≥ detection voltage (V_{EXLVI} = 1.21 V (TYP.))" when detecting the falling edge of EXLVI, or "input voltage from external input pin (EXLVI) < detection voltage (V_{EXLVI} = 1.21 V (TYP.))" when detecting the rising edge of EXLVI, at bit 0 (LVIF) of LVIM.

<6> Clear the interrupt request flag of LVI (LVIIF) to 0.

<7> Release the interrupt mask flag of LVI (LVIMK).

<8> Execute the EI instruction (when vector interrupts are used).

Figure 21-8 shows the timing of the interrupt signal generated by the low-voltage detector. The numbers in this timing chart correspond to <1> to <7> above.

Caution Input voltage from external input pin (EXLVI) must be EXLVI < V_{DD}.

- When stopping operation

Be sure to clear (0) LVION by using a 1-bit memory manipulation instruction.

Figure 21-8. Timing of Low-Voltage Detector Interrupt Signal Generation (Bit: LVISEL = 1)

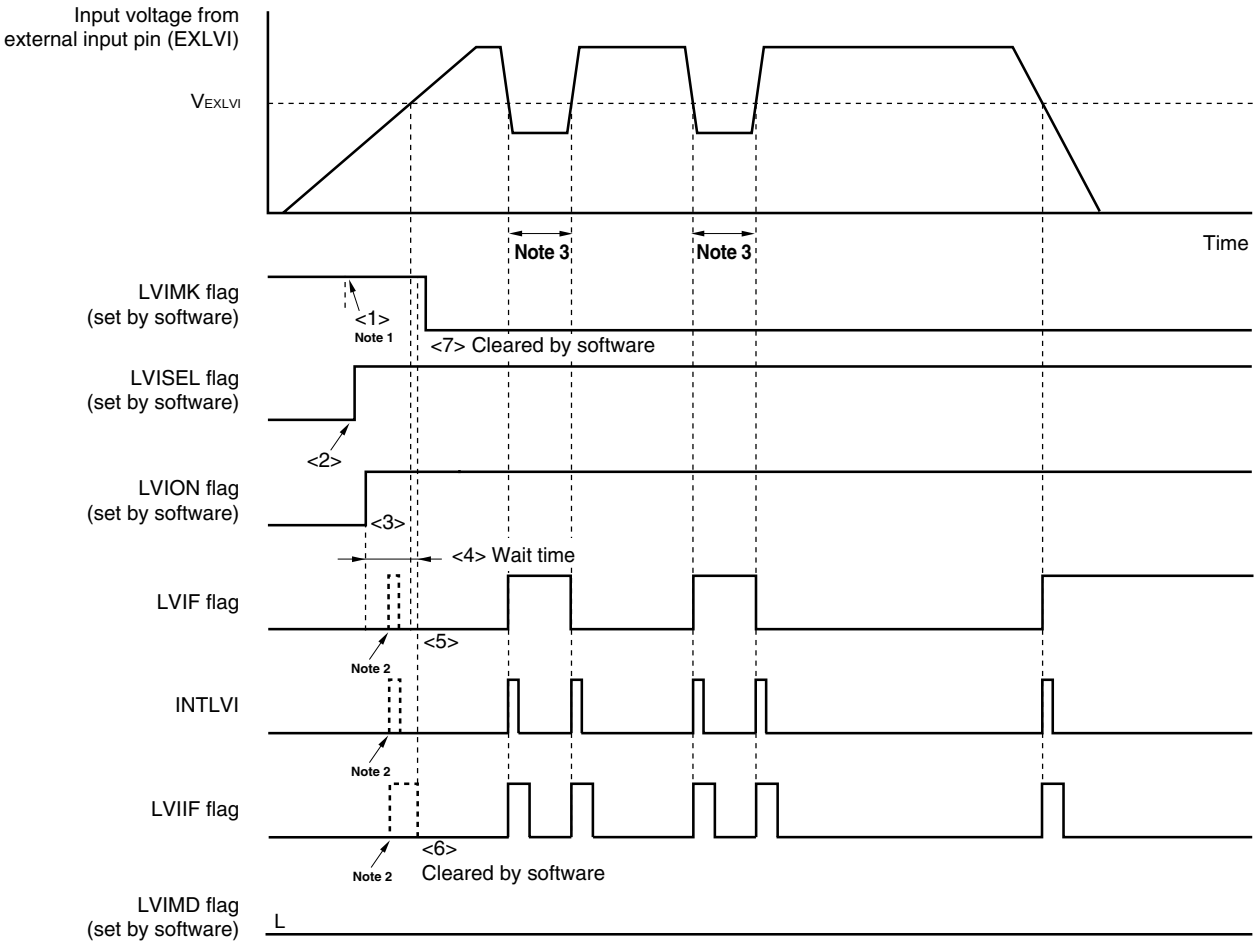

Notes 1. The LVIMK flag is set to “1” by reset signal generation.

2. The interrupt request signal (INTLVI) is generated and the LVIF and LVIIF flags may be set (1).

3. If LVI operation is disabled when the input voltage of external input pin (EXLVI) is less than or equal to the detection voltage (V_{EXLVI}), an interrupt request signal (INTLVI) is generated and LVIIF may be set to 1.

Remark <1> to <7> in Figure 21-8 above correspond to <1> to <7> in the description of “When starting operation” in **21.4.2 (2)**.

21.5 Cautions for Low-Voltage Detector

(1) Measures method when supply voltage (V_{DD}) frequently fluctuates in the vicinity of the LVI detection voltage (V_{LVI})

In a system where the supply voltage (V_{DD}) fluctuates for a certain period in the vicinity of the LVI detection voltage (V_{LVI}), the operation is as follows depending on how the low-voltage detector is used.

Operation example 1: When used as reset

The system may be repeatedly reset and released from the reset status.

The time from reset release through microcontroller operation start can be set arbitrarily by the following action.

<Action>

After releasing the reset signal, wait for the supply voltage fluctuation period of each system by means of a software counter that uses a timer, and then initialize the ports (see **Figure 21-9**).

Remark If bit 2 (LVISEL) of the low voltage detection register (LVIM) is set to “1”, the meanings of the above words change as follows.

- Supply voltage (V_{DD}) → Input voltage from external input pin (EXLVI)
- Detection voltage (V_{LVI}) → Detection voltage (V_{EXLVI} = 1.21 V)

Figure 21-9. Example of Software Processing After Reset Release (1/2)

• If supply voltage fluctuation is 50 ms or less in vicinity of LVI detection voltage

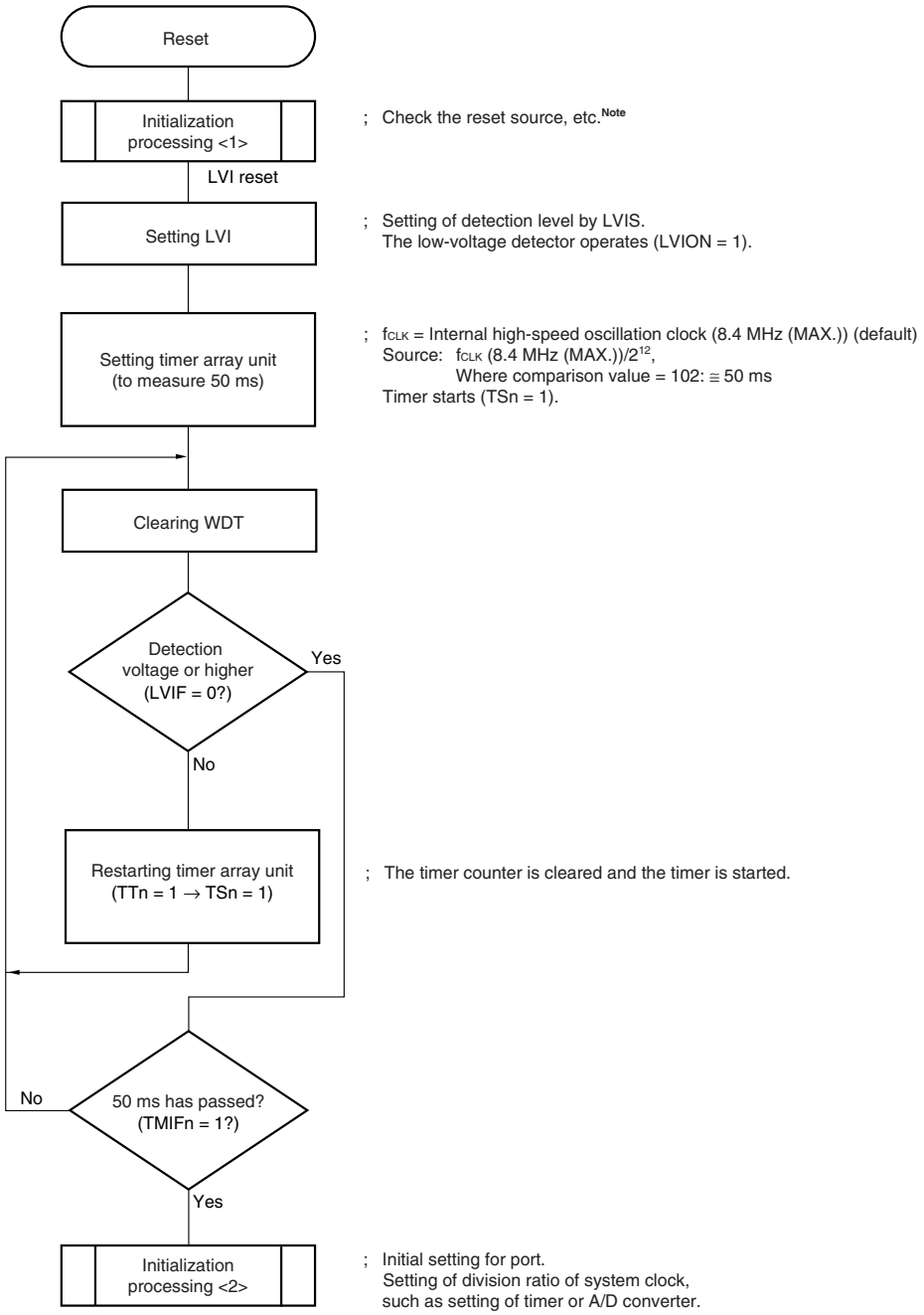

Note A flowchart is shown on the next page.

Remarks 1. If bit 2 (LVISEL) of the low voltage detection register (LVIM) is set to “1”, the meanings of the above words change as follows.

- Supply voltage (V_{DD}) → Input voltage from external input pin (EXLVI)
- Detection voltage (V_{LVI}) → Detection voltage (V_{EXLVI} = 1.21 V)

2. n = 00 to 11

Figure 21-9. Example of Software Processing After Reset Release (2/2)

• Checking reset source

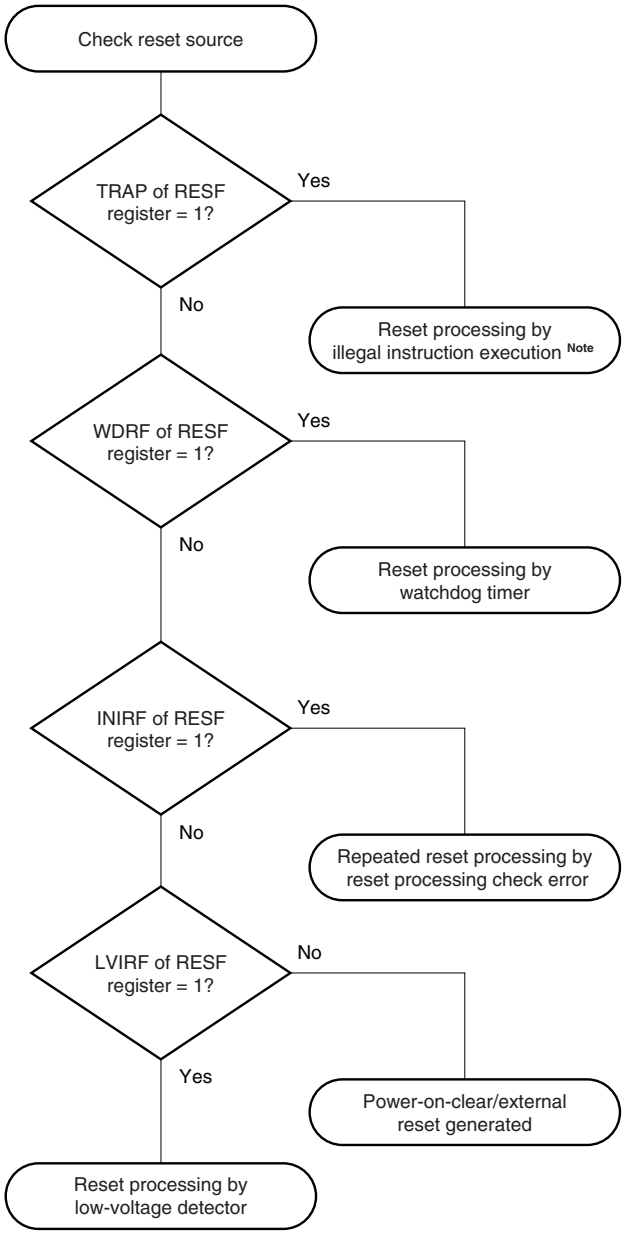

Note When instruction code FFH is executed.
Reset by the illegal instruction execution not issued by emulation with the in-circuit emulator or on-chip debug emulator.

Remark If bit 2 (LVISEL) of the low voltage detection register (LVIM) is set to “1”, the meanings of the above words change as follows.

- Supply voltage (V_{DD}) → Input voltage from external input pin (EXLVI)
- Detection voltage (V_{LVI}) → Detection voltage (V_{EXLVI} = 1.21 V)

Operation example 2: When used as interrupt

Interrupt requests may be generated frequently.

Take the following action.

<Action>

Confirm that "supply voltage (V_{DD}) ≥ detection voltage (V_{LVI})" when detecting the falling edge of V_{DD}, or "supply voltage (V_{DD}) < detection voltage (V_{LVI})" when detecting the rising edge of V_{DD}, in the servicing routine of the LVI interrupt by using bit 0 (LVIF) of the low-voltage detection register (LVIM). Clear bit 1 (LVIIF) of interrupt request flag register 0L (IF0L) to 0.

For a system with a long supply voltage fluctuation period near the LVI detection voltage, take the above action after waiting for the supply voltage fluctuation time.

Remark If bit 2 (LVISEL) of the low voltage detection register (LVIM) is set to "1", the meanings of the above words change as follows.

- Supply voltage (V_{DD}) → Input voltage from external input pin (EXLVI)
- Detection voltage (V_{LVI}) → Detection voltage (V_{EXLVI} = 1.21 V)

(2) Delay from the time LVI reset source is generated until the time LVI reset has been generated or released

There is some delay from the time supply voltage (V_{DD}) < LVI detection voltage (V_{LVI}) until the time LVI reset has been generated.

In the same way, there is also some delay from the time LVI detection voltage (V_{LVI}) ≤ supply voltage (V_{DD}) until the time LVI reset has been released (see **Figure 21-10**).

Figure 21-10. Delay from the time LVI reset source is generated until the time LVI reset has been generated or released

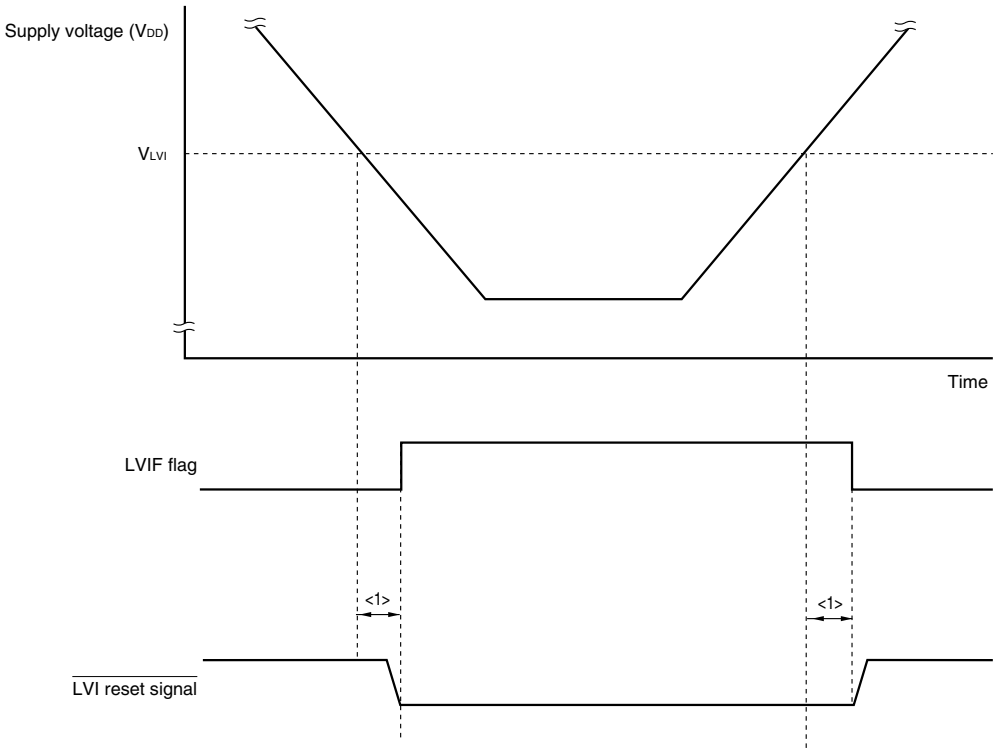

<1>: Minimum pulse width (200 μs (MIN.))

CHAPTER 22 REGULATOR

22.1 Regulator Overview

The 78K0R/Ix3 contains a circuit for operating the device with a constant voltage. At this time, in order to stabilize the regulator output voltage, connect the REGC pin to V_{SS} via a capacitor (0.47 to 1 μF). Also, use a capacitor with good characteristics, since it is used to stabilize internal voltage.

The regulator output voltage is normally 2.4 V (typ.), and in the low consumption current mode, 1.8 V (typ.).

22.2 Registers Controlling Regulator

(1) Regulator mode control register (RMC)

This register sets the output voltage of the regulator.

RMC is set with an 8-bit memory manipulation instruction.

Reset input sets this register to 00H.

Figure 22-1. Format of Regulator Mode Control Register (RMC)

Address: F00F4H After reset: 00H R/W

Symbol	7	6	5	4	3	2	1	0
RMC								

RMC[7:0]	Control of output voltage of regulator
5AH	Fixed to low consumption current mode (1.8 V)
00H	Switches normal current mode (2.4 V) and low consumption current mode (1.8 V) according to the condition (refer to **Table 22-1**)
Other than above	Setting prohibited

Cautions 1. When using the setting fixed to the low consumption current mode, the RMC register can be used in the following cases.

<When X1 clock is selected as the CPU clock>

$f_X \leq 5$ MHz and $f_{CLK} \leq 1$ MHz

<When the high-speed internal oscillation clock, external input clock, or subsystem clock are selected for the CPU clock>

$f_{CLK} \leq 1$ MHz

2. The self-programming function is disabled in the low consumption current mode.

Table 22-1. Regulator Output Voltage Conditions

Mode	Output Voltage	Condition
Low consumption current mode	1.8 V	During $\overline{\text{RESET}}$ pin reset
		In STOP mode (except during OCD mode)
		When both the high-speed system clock (f_{MX}), the high-speed internal oscillation clock (f_{IH}), and the 40 MHz internal high-speed oscillation clock (f_{IH40}) are stopped during CPU operation with the subsystem clock (f_{XT}) Note
		When both the high-speed system clock (f_{MX}), the high-speed internal oscillation clock (f_{IH}), and the 40 MHz internal high-speed oscillation clock (f_{IH40}) are stopped during the HALT mode when the CPU operation with the subsystem clock (f_{XT}) has been set Note
Normal current mode	2.4 V	Other than above

Note The 78K0R/IB3 doesn't have the subsystem clock. These conditions apply to products other than the 78K0R/IB3.

CHAPTER 23 OPTION BYTE

23.1 Functions of Option Bytes

Addresses 000C0H to 000C3H of the flash memory of the 78K0R/Ix3 form an option byte area.

Option bytes consist of user option byte (000C0H to 000C2H) and on-chip debug option byte (000C3H).

Upon power application or resetting and starting, an option byte is automatically referenced and a specified function is set. When using the product, be sure to set the following functions by using the option bytes.

To use the boot swap operation during self programming, 000C0H to 000C3H are replaced by 010C0H to 010C3H. Therefore, set the same values as 000C0H to 000C3H to 010C0H to 010C3H.

Caution Be sure to set FFH to 000C2H (000C2H/010C2H when the boot swap operation is used).

23.1.1 User option byte (000C0H to 000C2H/010C0H to 010C2H)

(1) 000C0H/010C0H

- ○ Operation of watchdog timer
  - Operation is stopped or enabled in the HALT or STOP mode.
- ○ Setting of interval time of watchdog timer
- ○ Operation of watchdog timer
  - Operation is stopped or enabled.
- ○ Setting of window open period of watchdog timer
- ○ Setting of interval interrupt of watchdog timer
  - Used or not used

Caution Set the same value as 000C0H to 010C0H when the boot swap operation is used because 000C0H is replaced by 010C0H.

(2) 000C1H/010C1H

- ○ Be sure to set FFH, as these addresses are reserved areas.

Caution Set the same value as 000C1H to 010C1H when the boot swap operation is used because 000C1H is replaced by FFH.

(3) 000C2H/010C2H

- ○ Be sure to set FFH, as these addresses are reserved areas.

Caution Set FFH to 010C2H when the boot swap operation is used because 000C2H is replaced by 010C2H.

23.1.2 On-chip debug option byte (000C3H/ 010C3H)

○ Control of on-chip debug operation
- On-chip debug operation is disabled or enabled.

○ Handling of data of flash memory in case of failure in on-chip debug security ID authentication
- Data of flash memory is erased or not erased in case of failure in on-chip debug security ID authentication.

Caution Set the same value as 000C3H to 010C3H when the boot swap operation is used because 000C3H is replaced by 010C3H.

23.2 Format of User Option Byte

The format of user option byte is shown below.

Figure 23-1. Format of User Option Byte (000C0H/010C0H) (1/2)

Address: 000C0H/010C0H[Note 1]

7	6	5	4	3	2	1	0
WDTINIT	WINDOW1	WINDOW0	WDTON	WDCS2	WDCS1	WDCS0	WDSTBYON

WDTINIT	Use of interval interrupt of watchdog timer
0	Interval interrupt is not used.
1	Interval interrupt is generated when 75% of the overflow time is reached.

WINDOW1	WINDOW0	Watchdog timer window open period[Note 2]
0	0	25%
0	1	50%
1	0	75%
1	1	100%

WDTON	Operation control of watchdog timer counter
0	Counter operation disabled (counting stopped after reset)
1	Counter operation enabled (counting started after reset)

WDCS2	WDCS1	WDCS0	Watchdog timer overflow time (f_{IL} = 33 kHz (MAX.))
0	0	0	$2^7/f_{IL}$ (3.88 ms)
0	0	1	$2^8/f_{IL}$ (7.76 ms)
0	1	0	$2^9/f_{IL}$ (15.52 ms)
0	1	1	$2^{10}/f_{IL}$ (31.03 ms)
1	0	0	$2^{12}/f_{IL}$ (124.12 ms)
1	0	1	$2^{14}/f_{IL}$ (496.48 ms)
1	1	0	$2^{15}/f_{IL}$ (992.97 ms)
1	1	1	$2^{17}/f_{IL}$ (3971.88 ms)

Figure 23-1. Format of User Option Byte (000C0H/010C0H) (2/2)

Address: 000C0H/010C0H[Note 1]

7	6	5	4	3	2	1	0
WDTINIT	WINDOW1	WINDOW0	WDTON	WDCS2	WDCS1	WDCS0	WDSTBYON

WDSTBYON	Operation control of watchdog timer counter (HALT/STOP mode)
0	Counter operation stopped in HALT/STOP mode[Note 2]
1	Counter operation enabled in HALT/STOP mode

Notes 1. Set the same value as 000C0H to 010C0H when the boot swap operation is used because 000C0H is replaced by 010C0H.

2. The window open period is 100% when WDSTBYON = 0, regardless the value of WINDOW1 and WINDOW0.

Caution The watchdog timer continues its operation during self-programming of the flash memory and EEPROM emulation. During processing, the interrupt acknowledge time is delayed. Set the overflow time and window size taking this delay into consideration.

Remark f_{IL}: Internal low-speed oscillation clock frequency

Figure 23-2. Format of Option Byte (000C1H/010C1H)

Address: 000C1H/010C1H[Note]

7	6	5	4	3	2	1	0
1	1	1	1	1	1	1	1

Note Be sure to set FFH to 000C1H, as these addresses are reserved areas. Also set FFH to 010C1H when the boot swap operation is used because 000C1H is replaced by 010C1H.

Figure 23-3. Format of Option Byte (000C2H/010C2H)

Address: 000C2H/010C2H[Note]

7	6	5	4	3	2	1	0
1	1	1	1	1	1	1	1

Note Be sure to set FFH to 000C2H, as these addresses are reserved areas. Also set FFH to 010C2H when the boot swap operation is used because 000C2H is replaced by 010C2H.

23.3 Format of On-chip Debug Option Byte

The format of on-chip debug option byte is shown below.

Figure 23-4. Format of On-chip Debug Option Byte (000C3H/010C3H)

Address: 000C3H/010C3H[Note]

7	6	5	4	3	2	1	0
OCDENSET	0	0	0	0	1	0	OCDERSD

OCDENSET	OCDERSD	Control of on-chip debug operation
0	0	Disables on-chip debug operation.
0	1	Setting prohibited
1	0	Erases data of flash memory in case of failures in enabling on-chip debugging and authenticating on-chip debug security ID.
1	1	Does not erases data of flash memory in case of failures in enabling on-chip debugging and authenticating on-chip debug security ID.

Note Set the same value as 000C3H to 010C3H when the boot swap operation is used because 000C3H is replaced by 010C3H.

Caution Bits 7 and 0 (OCDENSET and OCDERSD) can only be specified a value.
Be sure to set 000010B to bits 6 to 1.

Remark The value on bits 3 to 1 will be written over when the on-chip debug function is in use and thus it will become unstable after the setting.
However, be sure to set the default values (0, 1, and 0) to bits 3 to 1 at setting.

23.4 Setting of Option Byte

The user option byte and on-chip debug option byte can be set using the RA78K0R or PM+ linker option, in addition to describing to the source. When doing so, the contents set by using the linker option take precedence, even if descriptions exist in the source, as mentioned below.

See the **RA78K0R Assembler Package User's Manual** for how to set the linker option.

A software description example of the option byte setting is shown below.

```
OPT   CSEG        OPT_BYTE
      DB          16H      ; Does not use interval interrupt of watchdog timer,
                           ; Enables watchdog timer operation,
                           ; Window open period of watchdog timer is 25%,
                           ; Overflow time of watchdog timer is 2^10/fIL,
                           ; Stops watchdog timer operation during HALT/STOP mode
      DB          0FFH     ; Reserved area
      DB          0FFH     ; Reserved area
      DB          85H      ; Enables on-chip debug operation, does not erase flash memory
                           ; data when security ID authorization fails
```

When the boot swap function is used during self programming, 000C0H to 000C3H is switched to 010C0H to 010C3H. Describe to 010C0H to 010C3H, therefore, the same values as 000C0H to 000C3H as follows.

```
OPT2  CSEG   AT   010C0H
      DB          16H      ; Does not use interval interrupt of watchdog timer,
                           ; Enables watchdog timer operation,
                           ; Window open period of watchdog timer is 25%,
                           ; Overflow time of watchdog timer is 2^10/fIL,
                           ; Stops watchdog timer operation during HALT/STOP mode
      DB          0FFH     ; Reserved area
      DB          0FFH     ; Reserved area
      DB          85H      ; Enables on-chip debug operation, does not erase flash memory
                           ; data when security ID authorization fails
```

Caution To specify the option byte by using assembly language, use OPT_BYTE as the relocation attribute name of the CSEG pseudo instruction. To specify the option byte to 010C0H to 010C3H in order to use the boot swap function, use the relocation attribute AT to specify an absolute address.

CHAPTER 24 FLASH MEMORY

The 78K0R/Ix3 incorporates the flash memory to which a program can be written, erased, and overwritten while mounted on the board.

24.1 Writing with Flash Memory Programmer

The following dedicated flash memory programmer can be used to write data to the internal flash memory of the 78K0R/Ix3.

- PG-FP5, FL-PR5
- QB-MINI2

(1) On-board programming

The contents of the flash memory can be rewritten after the 78K0R/Ix3 has been mounted on the target system. The connectors that connect the dedicated flash memory programmer must be mounted on the target system.

(2) Off-board programming

Data can be written to the flash memory with a dedicated program adapter (FA series) before the 78K0R/Ix3 is mounted on the target system.

Remark The FL-PR5, and FA series are products of Naito Densei Machida Mfg. Co., Ltd.

Table 24-1. Wiring Between 78K0R/Ix3 and Dedicated Flash Memory Programmer

Pin Configuration of Dedicated Flash Memory Programmer			Pin Name	Pin No.					
Signal Name	I/O	Pin Function		IB3	IC3 (38-pin)	IC3 (44-pin)	IC3 (48-pin)	ID3	IE3
SI/RxD[Notes 1, 2]	Input	Receive signal	TOOL0/P40	17	21	2	39	4	5
SO/TxD[Note 2]	Output	Transmit signal							
SCK	Output	Transfer clock	–	–	–	–	–	–	–
CLK	Output	Clock output	–	–	–	–	–	–	–
/RESET	Output	Reset signal	$\overline{\text{RESET}}$	6	6	3	40	5	6
FLMD0	Output	Mode signal	FLMD0	7	9	6	43	8	9
V_{DD}	I/O	V_{DD} voltage generation/ power monitoring	V_{DD}	12	14	11	48	13	15
			EV_{DD}	–	–	–	–	–	16
			AV_{REF}	27	33	32	23	38	47
GND	–	Ground	V_{SS}	11	13	10	47	12	13
			EV_{SS}	–	–	–	–	–	14
			AV_{SS}	28	34	33	24	39	48

Notes 1. This pin is not required to be connected when using PG-FP5 or FL-PR5.

2. Connect SI/RxD or SO/TxD when using QB-MINI2.

Examples of the recommended connection when using the adapter for flash memory writing are shown below.

Figure 24-1. Example of Wiring Adapter for Flash Memory Writing (78K0R/IB3)

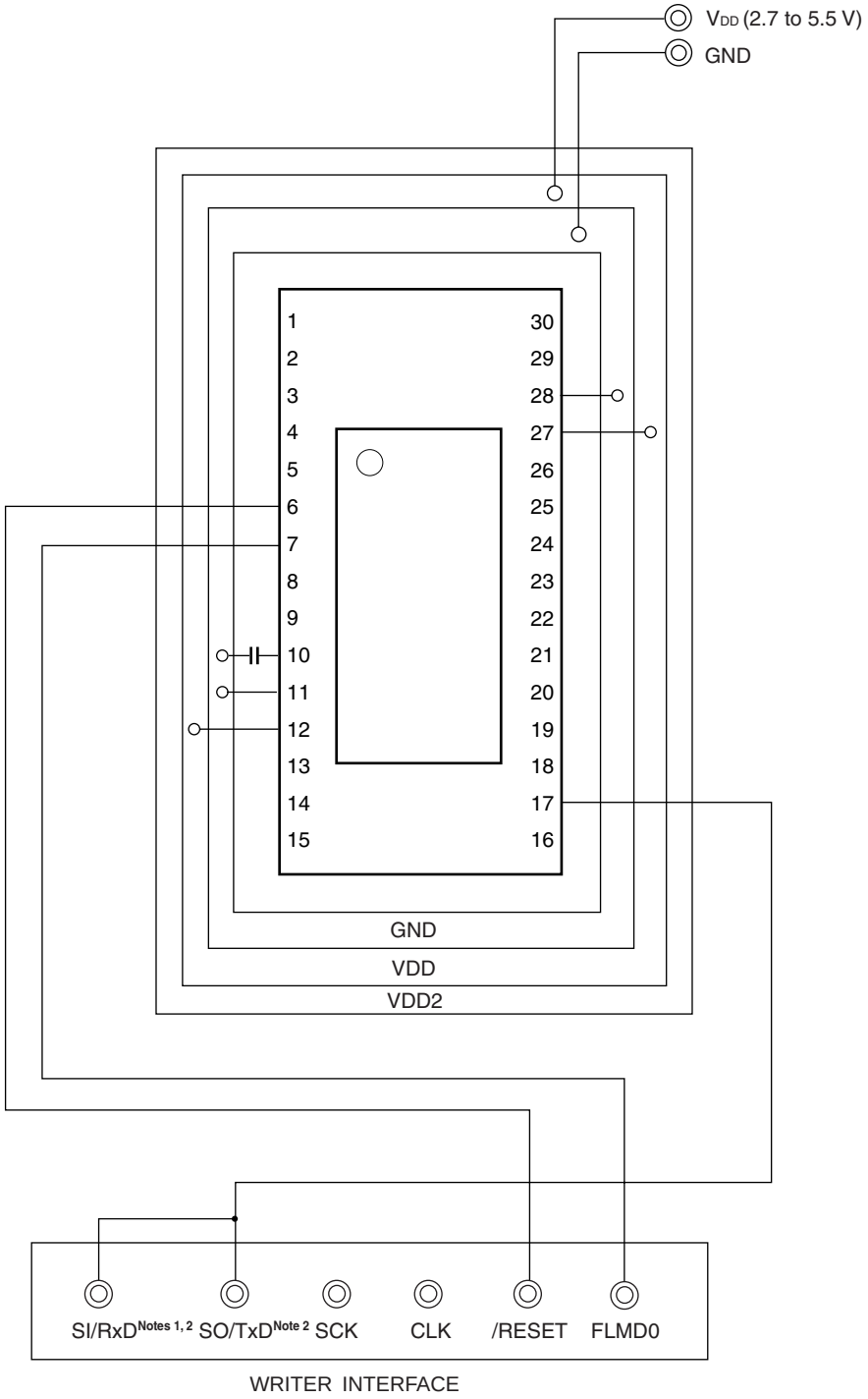

Notes 1. This pin is not required to be connected when using PG-FP5 or FL-PR5.

2. Connect SI/RxD or SO/TxD when using QB-MINI2.

Figure 24-2. Example of Wiring Adapter for Flash Memory Writing (38-pin products of 78K0R/IC3)

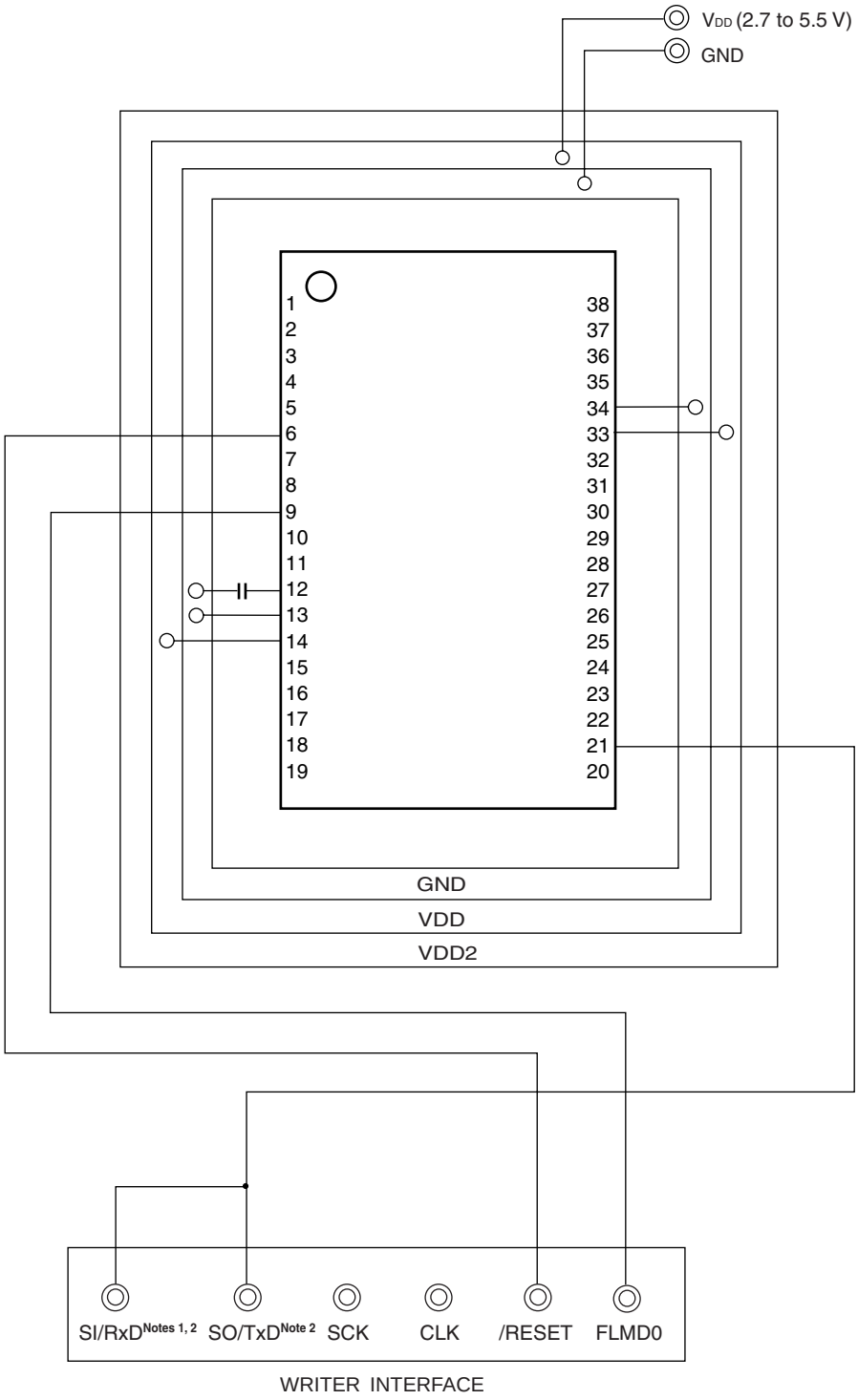

Notes 1. This pin is not required to be connected when using PG-FP5 or FL-PR5.

2. Connect SI/RxD or SO/TxD when using QB-MINI2.

Figure 24-3. Example of Wiring Adapter for Flash Memory Writing (44-pin products of 78K0R/IC3)

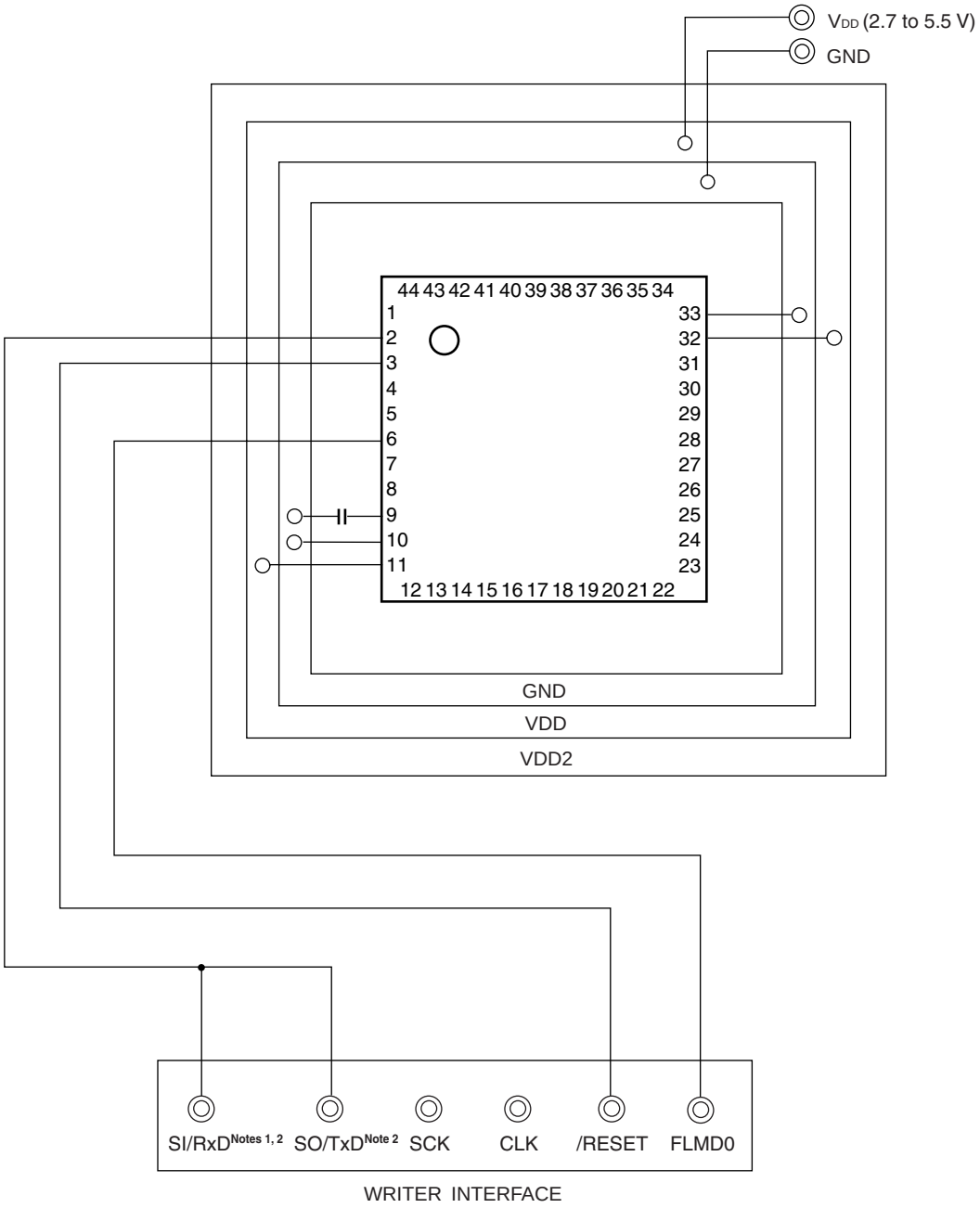

Notes 1. This pin is not required to be connected when using PG-FP5 or FL-PR5.

2. Connect SI/RxD or SO/TxD when using QB-MINI2.

Figure 24-4. Example of Wiring Adapter for Flash Memory Writing (48-pin products of 78K0R/IC3)

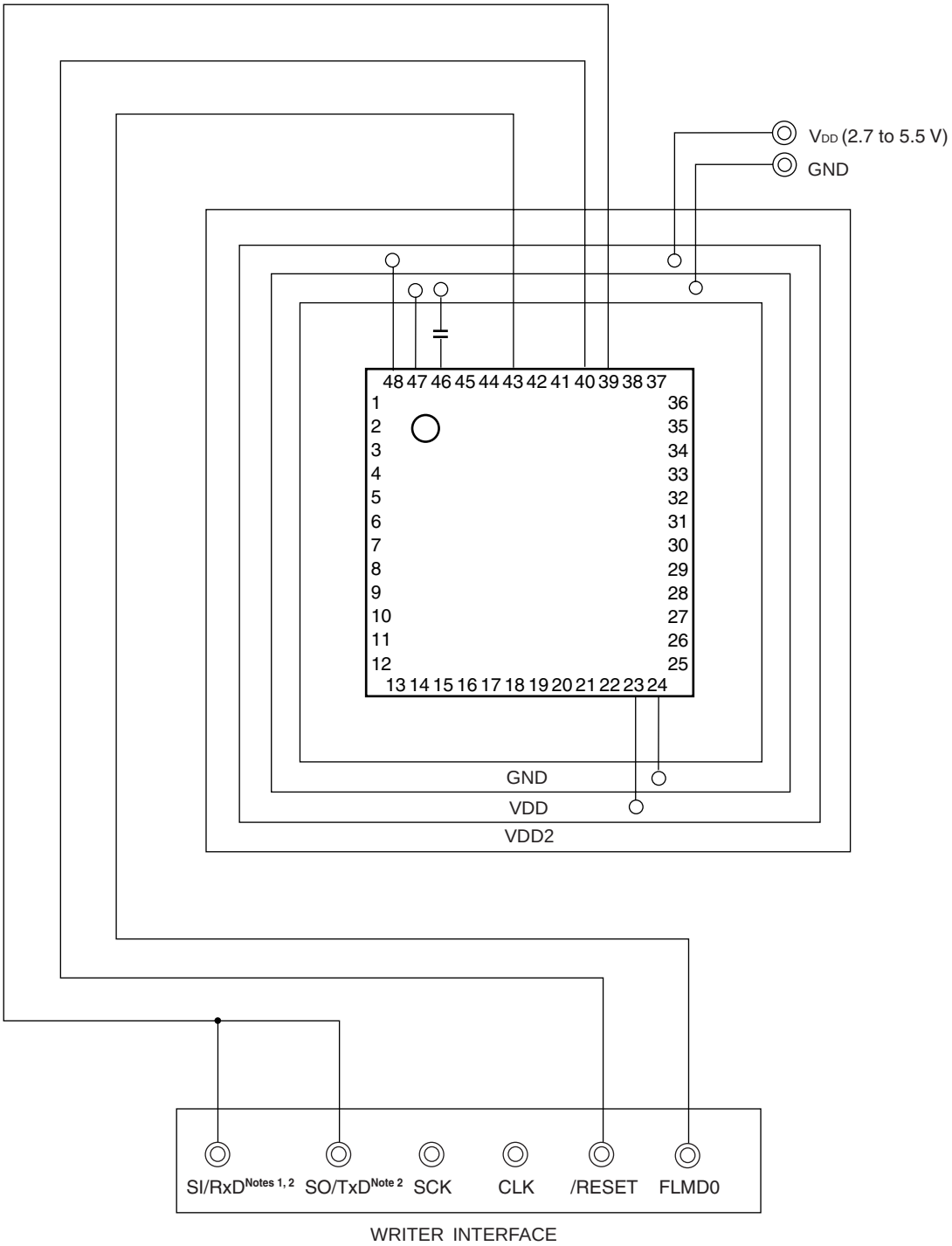

Notes 1. This pin is not required to be connected when using PG-FP5 or FL-PR5.

2. Connect SI/RxD or SO/TxD when using QB-MINI2.

Figure 24-5. Example of Wiring Adapter for Flash Memory Writing (78K0R/ID3)

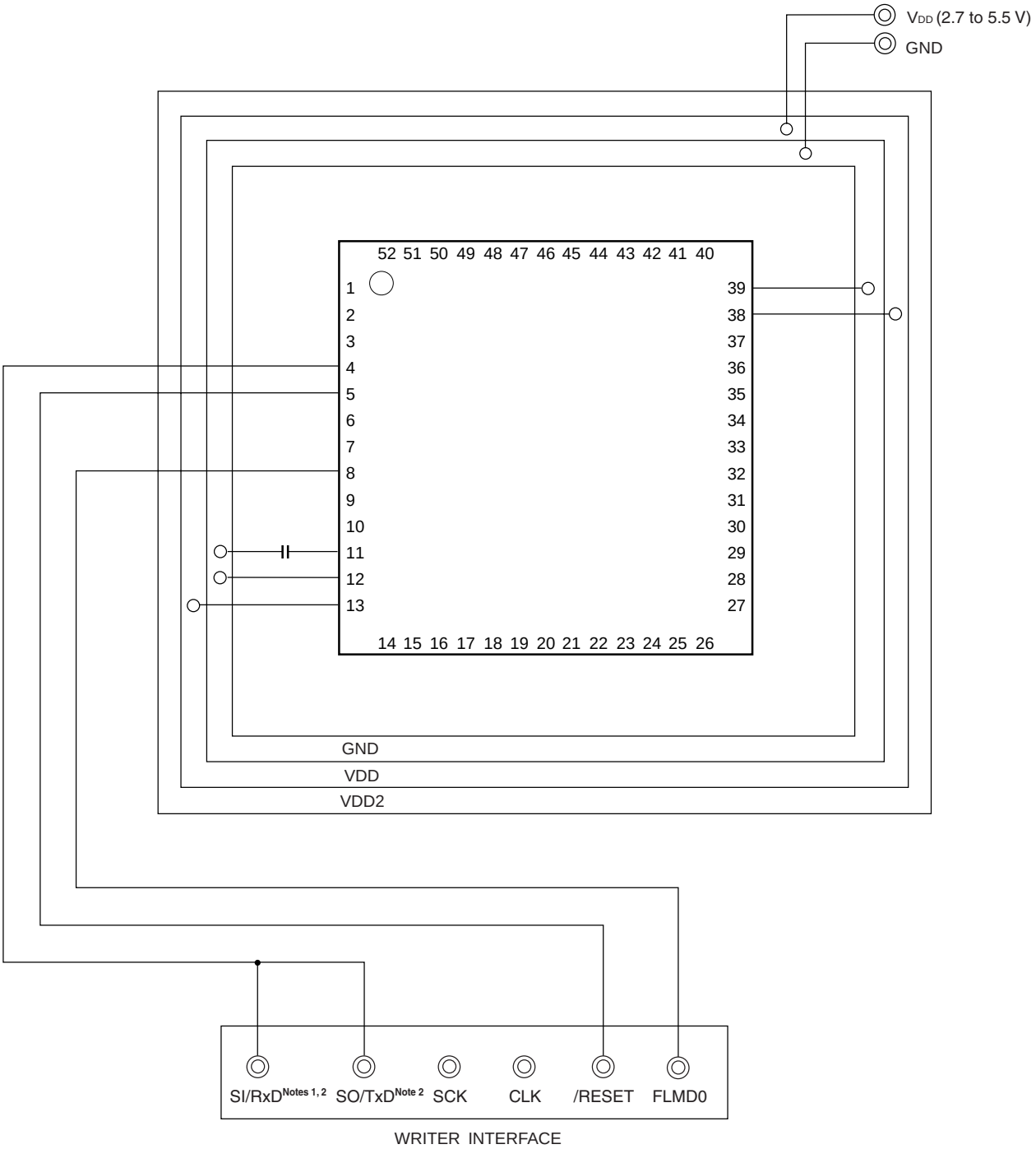

Notes 1. This pin is not required to be connected when using PG-FP5 or FL-PR5.

2. Connect SI/RxD or SO/TxD when using QB-MINI2.

Figure 24-6. Example of Wiring Adapter for Flash Memory Writing (78K0R/IE3)

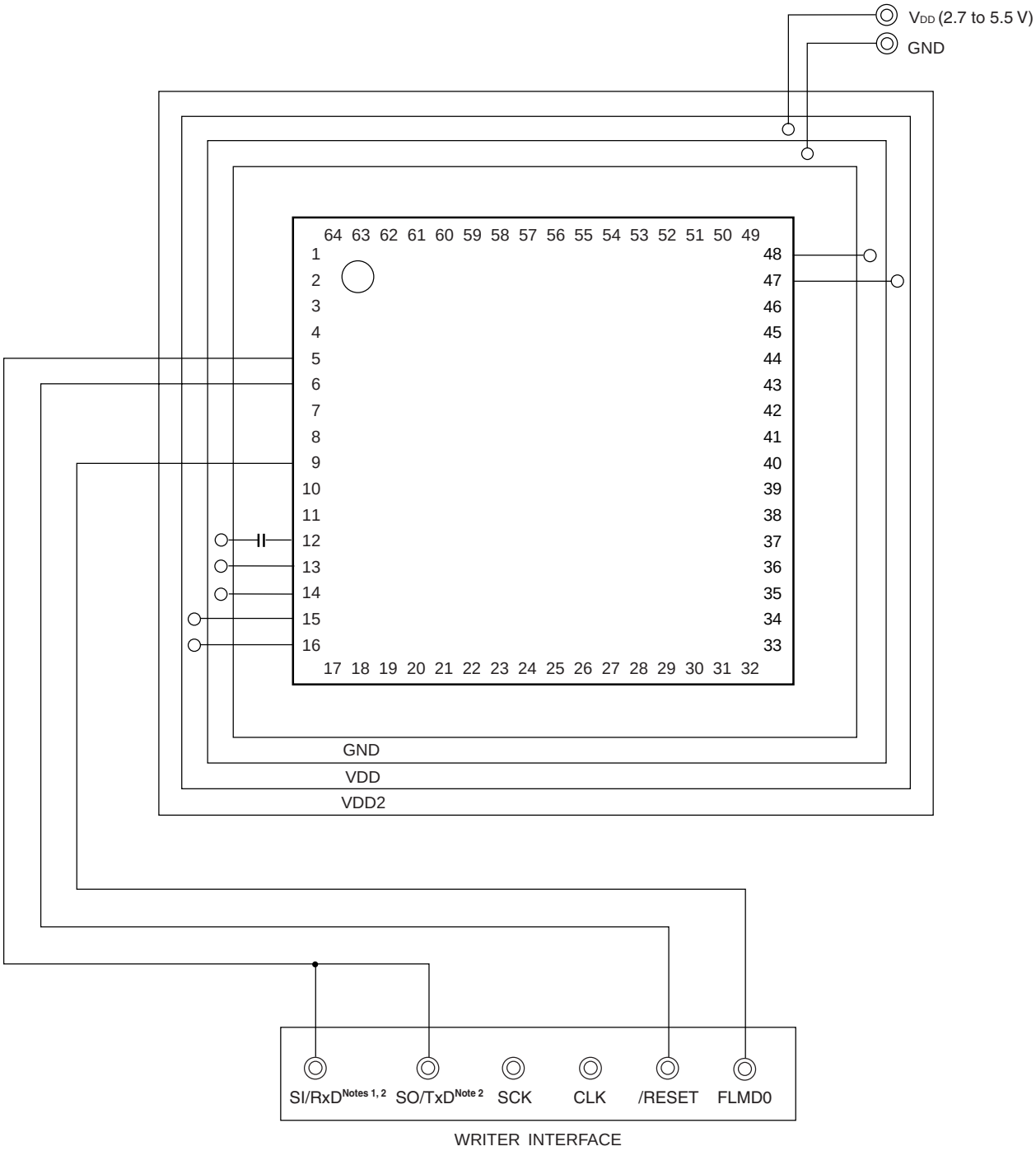

Notes 1. This pin is not required to be connected when using PG-FP5 or FL-PR5.

2. Connect SI/RxD or SO/TxD when using QB-MINI2.

24.2 Programming Environment

The environment required for writing a program to the flash memory of the 78K0R/Ix3 is illustrated below.

Figure 24-7. Environment for Writing Program to Flash Memory

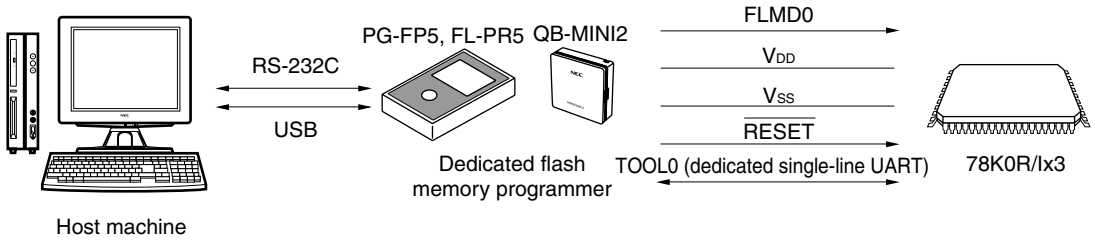

A host machine that controls the dedicated flash memory programmer is necessary.

To interface between the dedicated flash memory programmer and the 78K0R/Ix3, the TOOL0 pin is used for manipulation such as writing and erasing via a dedicated single-line UART. To write the flash memory off-board, a dedicated program adapter (FA series) is necessary.

24.3 Communication Mode

Communication between the dedicated flash memory programmer and the 78K0R/Ix3 is established by serial communication using the TOOL0 pin via a dedicated single-line UART of the 78K0R/Ix3.

Transfer rate: 115,200 bps to 1,000,000 bps

Figure 24-8. Communication with Dedicated Flash Memory Programmer

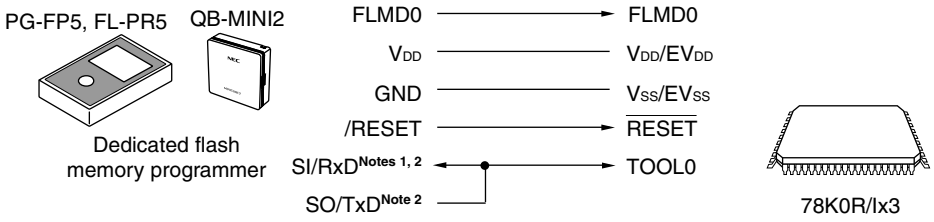

Notes 1. This pin is not required to be connected when using PG-FP5 or FL-PR5.

2. Connect SI/RxD or SO/TxD when using QB-MINI2.

The dedicated flash memory programmer generates the following signals for the 78K0R/Ix3. See the manual of PG-FP5, FL-PR5, or MINICUBE2 for details.

Table 24-2. Pin Connection

Dedicated Flash Memory Programmer			78K0R/Ix3	Connection
Signal Name	I/O	Pin Function	Pin Name	
FLMD0	Output	Mode signal	FLMD0	◎
V_{DD}	I/O	V_{DD} voltage generation/power monitoring	V_{DD}, EV_{DD}, AV_{REF}	◎
GND	–	Ground	V_{SS}, EV_{SS}, AV_{SS}	◎
CLK	Output	Clock output	–	×
/RESET	Output	Reset signal	$\overline{RESET}$	◎
SI/RxD[Notes 1, 2]	Input	Receive signal	TOOL0	◎
SO/TxD[Note 2]	Output	Transmit signal		
SCK	Output	Transfer clock	–	×

Notes 1. This pin is not required to be connected when using PG-FP5 or FL-PR5.

2. Connect SI/RxD or SO/TxD when using QB-MINI2.

Remark ◎: Be sure to connect the pin.

×: The pin does not have to be connected.

24.4 Connection of Pins on Board

To write the flash memory on-board, connectors that connect the dedicated flash memory programmer must be provided on the target system. First provide a function that selects the normal operation mode or flash memory programming mode on the board.

When the flash memory programming mode is set, all the pins not used for programming the flash memory are in the same status as immediately after reset. Therefore, if the external device does not recognize the state immediately after reset, the pins must be handled as described below.

24.4.1 FLMD0 pin

(1) In flash memory programming mode

Directly connect this pin to a flash memory programmer when data is written by the flash memory programmer. This supplies a writing voltage of the V_{DD} level to the FLMD0 pin.

The FLMD0 pin does not have to be pulled down externally because it is internally pulled down by reset. To pull it down externally, use a resistor of 1 kΩ to 200 kΩ.

(2) In normal operation mode

It is recommended to leave this pin open during normal operation.

The FLMD0 pin must always be kept at the V_{SS} level before reset release but does not have to be pulled down externally because it is internally pulled down by reset. However, pulling it down must be kept selected (i.e., FLMDPUP = “0”, default value) by using bit 7 (FLMDPUP) of the background event control register (BECTL) (see **24.5 (1) Back ground event control register**). To pull it down externally, use a resistor of 200 kΩ or smaller.

Self programming and the rewriting of flash memory with the programmer can be prohibited using hardware, by directly connecting this pin to the V_{SS} pin.

(3) In self programming mode

It is recommended to leave this pin open when using the self programming function. To pull it down externally, use a resistor of 100 kΩ to 200 kΩ.

In the self programming mode, the setting is switched to pull up in the self programming library.

Figure 24-9. FLMD0 Pin Connection Example

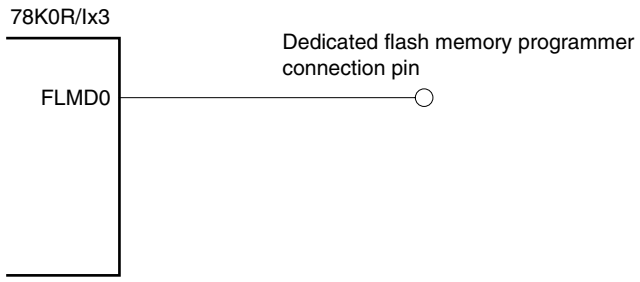

24.4.2 TOOL0 pin

In the flash memory programming mode, connect this pin directly to the dedicated flash memory programmer or pull it up by connecting it to V_{DD} via an external resistor.

When on-chip debugging is enabled in the normal operation mode, pull this pin up by connecting it to V_{DD} via an external resistor, and be sure to keep inputting the V_{DD} level to the TOOL0 pin before reset is released (pulling down this pin is prohibited).

Remark The SAU and IICA pins are not used for communication between the 78K0R/Ix3 and dedicated flash memory programmer, because single-line UART is used.

24.4.3 $\overline{\text{RESET}}$ pin

Signal conflict will occur if the reset signal of the dedicated flash memory programmer is connected to the $\overline{\text{RESET}}$ pin that is connected to the reset signal generator on the board. To prevent this conflict, isolate the connection with the reset signal generator.

The flash memory will not be correctly programmed if the reset signal is input from the user system while the flash memory programming mode is set . Do not input any signal other than the reset signal of the dedicated flash memory programmer.

Figure 24-10. Signal Conflict ($\overline{\text{RESET}}$ Pin)

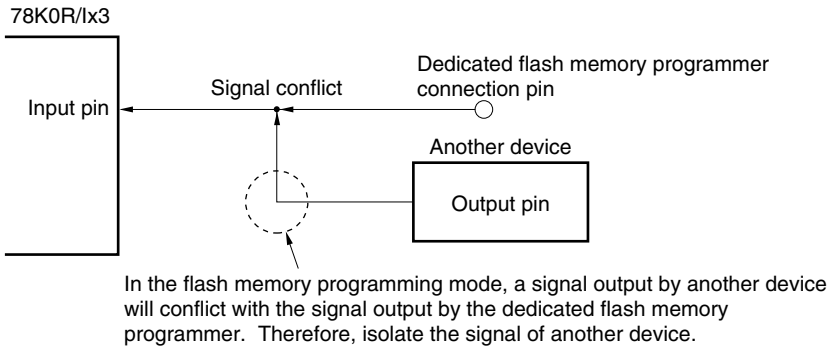

24.4.4 Port pins

When the flash memory programming mode is set, all the pins not used for flash memory programming enter the same status as that immediately after reset. If external devices connected to the ports do not recognize the port status immediately after reset, the port pin must be connected to V_{DD} or V_{SS} via a resistor.

24.4.5 REGC pin

Connect the REGC pin to GND via a capacitor (0.47 to 1 μF) in the same manner as during normal operation. Also, use a capacitor with good characteristics, since it is used to stabilize internal voltage.

24.4.6 X1 and X2 pins

Connect X1 and X2 in the same status as in the normal operation mode.

Remark In the flash memory programming mode, the internal high-speed oscillation clock (f_{IH}) is used.

24.4.7 Power supply

To use the supply voltage output of the flash memory programmer, connect the V_{DD} pin to V_{DD} of the flash memory programmer, and the V_{SS} pin to GND of the flash memory programmer.

To use the on-board supply voltage, connect in compliance with the normal operation mode.

However, when using the on-board supply voltage, be sure to connect the V_{DD} and V_{SS} pins to V_{DD} and GND of the flash memory programmer to use the power monitor function with the flash memory programmer.

Supply the same other power supplies (EV_{DD}, EV_{SS}, AV_{REF}, and AV_{SS}) as those in the normal operation mode.

24.5 Registers that Control Flash Memory

(1) Background event control register (BECTL)

Even if the FLMD0 pin is not controlled externally, it can be controlled by software with the BECTL register to set the self-programming mode.

However, depending on the processing of the FLMD0 pin, it may not be possible to set the self-programming mode by software. When using BECTL, leaving the FLMD0 pin open is recommended. When pulling it down externally, use a resistor with a resistance of 100 kΩ or more. In addition, in the normal operation mode, use BECTL with the pull down selection. In the self-programming mode, the setting is switched to pull up in the self-programming library.

The BECTL register is set by a 1-bit or 8-bit memory manipulation instruction.

Reset input sets this register to 00H.

Figure 24-11. Format of Background Event Control Register (BECTL)

Address: FFFBEH After reset: 00H R/W

Symbol	7	6	5	4	3	2	1	0
BECTL	FLMDPUP	0	0	0	0	0	0	0

FLMDPUP	Software control of FLMD0 pin
0	Selects pull-down
1	Selects pull-up

24.6 Programming Method

24.6.1 Controlling flash memory

The following figure illustrates the procedure to manipulate the flash memory.

Figure 24-12. Flash Memory Manipulation Procedure

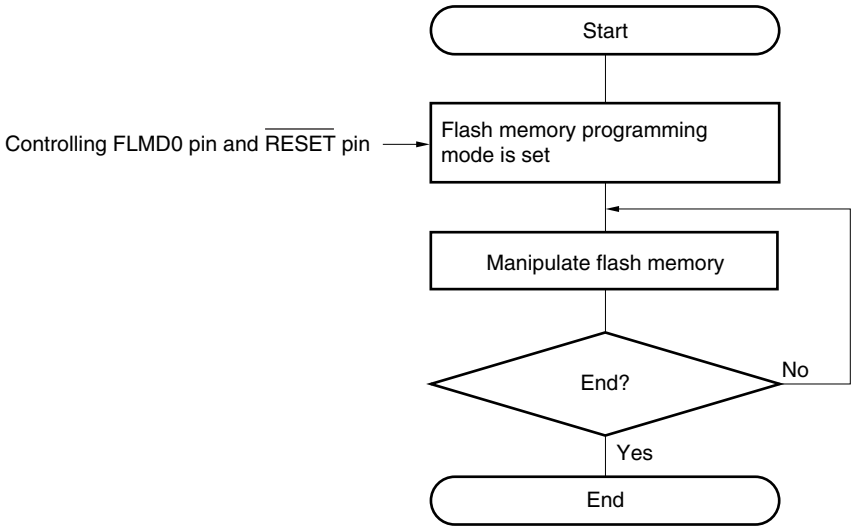

24.6.2 Flash memory programming mode

To rewrite the contents of the flash memory by using the dedicated flash memory programmer, set the 78K0R/Ix3 in the flash memory programming mode. To set the mode, set the FLMD0 pin and TOOL0 pin to V_{DD} and clear the reset signal.

Change the mode by using a jumper when writing the flash memory on-board.

Figure 24-13. Flash Memory Programming Mode

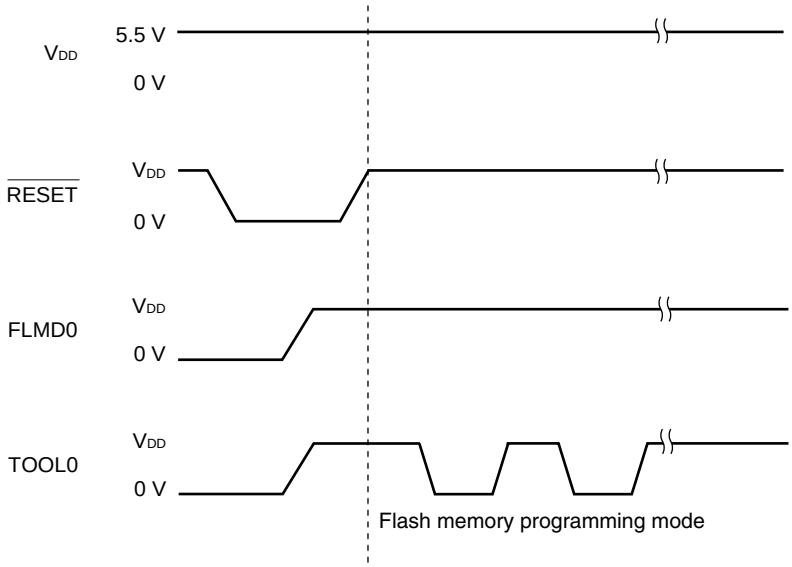

Table 24-3. Relationship Between FLMD0 Pin and Operation Mode After Reset Release

FLMD0	Operation Mode
0	Normal operation mode
V_{DD}	Flash memory programming mode

24.6.3 Selecting communication mode

Communication mode of the 78K0R/Ix3 as follows.

Table 24-4. Communication Modes

Communication Mode	Standard Setting[Note 1]				Pins Used
	Port	Speed	Frequency	Multiply Rate	
1-line mode (single-line UART)	UART	115,200 bps, 250,000 bps, 500,000 bps, 1 Mbps[Note 2]	–	–	TOOL0

Notes 1. Selection items for Standard settings on GUI of the flash memory programmer.

2. Because factors other than the baud rate error, such as the signal waveform slew, also affect UART communication, thoroughly evaluate the slew as well as the baud rate error.

24.6.4 Communication commands

The 78K0R/Ix3 communicates with the dedicated flash memory programmer by using commands. The signals sent from the flash memory programmer to the 78K0R/Ix3 are called commands, and the signals sent from the 78K0R/Ix3 to the dedicated flash memory programmer are called response.

Figure 24-14. Communication Commands

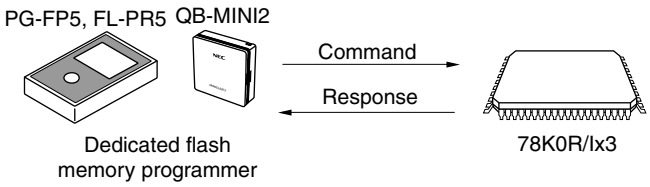

The flash memory control commands of the 78K0R/Ix3 are listed in the table below. All these commands are issued from the programmer and the 78K0R/Ix3 perform processing corresponding to the respective commands.

Table 24-5. Flash Memory Control Commands

Classification	Command Name	Function
Verify	Verify	Compares the contents of a specified area of the flash memory with data transmitted from the programmer.
Erase	Chip Erase	Erases the entire flash memory.
	Block Erase	Erases a specified area in the flash memory.
Blank check	Block Blank Check	Checks if a specified block in the flash memory has been correctly erased.
Write	Programming	Writes data to a specified area in the flash memory.
Getting information	Silicon Signature	Gets 78K0R/Ix3 information (such as the part number and flash memory configuration).
	Version Get	Gets the 78K0R/Ix3 firmware version.
	Checksum	Gets the checksum data for a specified area.
Security	Security Set	Sets security information.
Others	Reset	Used to detect synchronization status of communication.
	Baud Rate Set	Sets baud rate when UART communication mode is selected.

The 78K0R/Ix3 return a response for the command issued by the dedicated flash memory programmer. The response names sent from the 78K0R/Ix3 are listed below.

Table 24-6. Response Names

Response Name	Function
ACK	Acknowledges command/data.
NAK	Acknowledges illegal command/data.

24.7 Security Settings

The 78K0R/Ix3 supports a security function that prohibits rewriting the user program written to the internal flash memory, so that the program cannot be changed by an unauthorized person.

The operations shown below can be performed using the Security Set command. The security setting is valid when the programming mode is set next.

- Disabling batch erase (chip erase)
  Execution of the block erase and batch erase (chip erase) commands for entire blocks in the flash memory is prohibited by this setting during on-board/off-board programming. Once execution of the batch erase (chip erase) command is prohibited, all of the prohibition settings (including prohibition of batch erase (chip erase)) can no longer be cancelled.

  Caution After the security setting for the batch erase is set, erasure cannot be performed for the device. In addition, even if a write command is executed, data different from that which has already been written to the flash memory cannot be written, because the erase command is disabled.

- Disabling block erase
  Execution of the block erase command for a specific block in the flash memory is prohibited during on-board/off-board programming. However, blocks can be erased by means of self programming.

- Disabling write
  Execution of the write and block erase commands for entire blocks in the flash memory is prohibited during on-board/off-board programming. However, blocks can be written by means of self programming.

- Disabling rewriting boot cluster 0
  Execution of the batch erase (chip erase) command, block erase command, and write command on boot cluster 0 in the flash memory is prohibited by this setting.

The batch erase (chip erase), block erase, write commands, and rewriting boot cluster 0 are enabled by the default setting when the flash memory is shipped. Security can be set by on-board/off-board programming and self programming. Each security setting can be used in combination.

All the security settings are cleared by executing the batch erase (chip erase) command.

Table 24-7 shows the relationship between the erase and write commands when the 78K0R/Ix3 security function is enabled.

Remark To prohibit writing and erasing during self-programming, use the flash sealed window function (see **24.8.2** for detail).

Table 24-7. Relationship Between Enabling Security Function and Command

(1) During on-board/off-board programming

Valid Security	Executed Command		
	Batch Erase (Chip Erase)	Block Erase	Write
Prohibition of batch erase (chip erase)	Cannot be erased in batch	Blocks cannot be erased.	Can be performed[Note].
Prohibition of block erase	Can be erased in batch.		Can be performed.
Prohibition of writing			Cannot be performed.
Prohibition of rewriting boot cluster 0	Cannot be erased in batch	Boot cluster 0 cannot be erased.	Boot cluster 0 cannot be written.

Note Confirm that no data has been written to the write area. Because data cannot be erased after batch erase (chip erase) is prohibited, do not write data if the data has not been erased.

(2) During self programming

Valid Security	Executed Command	
	Block Erase	Write
Prohibition of batch erase (chip erase)	Blocks can be erased.	Can be performed.
Prohibition of block erase		
Prohibition of writing		
Prohibition of rewriting boot cluster 0	Boot cluster 0 cannot be erased.	Boot cluster 0 cannot be written.

Remark To prohibit writing and erasing during self-programming, use the flash sealed window function (see **24.8.2** for detail).

Table 24-8. Setting Security in Each Programming Mode

(1) On-board/off-board programming

Security	Security Setting	How to Disable Security Setting
Prohibition of batch erase (chip erase)	Set via GUI of dedicated flash memory programmer, etc.	Cannot be disabled after set.
Prohibition of block erase		Execute batch erase (chip erase) command
Prohibition of writing		
Prohibition of rewriting boot cluster 0		Cannot be disabled after set.

(2) Self programming

Security	Security Setting	How to Disable Security Setting
Prohibition of batch erase (chip erase)	Set by using information library.	Cannot be disabled after set.
Prohibition of block erase		Execute batch erase (chip erase) command during on-board/off-board programming (cannot be disabled during self programming)
Prohibition of writing		
Prohibition of rewriting boot cluster 0		

24.8 Flash Memory Programming by Self-Programming

The 78K0R/Ix3 supports a self-programming function that can be used to rewrite the flash memory via a user program. Because this function allows a user application to rewrite the flash memory by using the 78K0R/Ix3 self-programming library, it can be used to upgrade the program in the field.

If an interrupt occurs during self-programming, self-programming can be temporarily stopped and interrupt servicing can be executed. If an unmasked interrupt request is generated in the EI state, the request branches directly from the self-programming library to the interrupt routine. After the self-programming mode is later restored, self-programming can be resumed. However, the interrupt response time is different from that of the normal operation mode.

Cautions
1. **The self-programming function cannot be used when the CPU operates with the subsystem clock (in products other than the 78K0R/IB3).**
2. **In the self-programming mode, call the self-programming start library (FlashStart).**
3. **To prohibit an interrupt during self-programming, in the same way as in the normal operation mode, execute the self-programming library in the state where the IE flag is cleared (0) by the DI instruction. To enable an interrupt, clear (0) the interrupt mask flag to accept in the state where the IE flag is set (1) by the EI instruction, and then execute the self-programming library.**
4. **The self-programming function is disabled in the low consumption current mode. For details of the low consumption current mode, see CHAPTER 22 REGULATOR.**
5. **Disable DMA operation (DENn = 0) during the execution of self programming library functions.**

The following figure illustrates a flow of rewriting the flash memory by using a self programming library.

Figure 24-15. Flow of Self Programming (Rewriting Flash Memory)

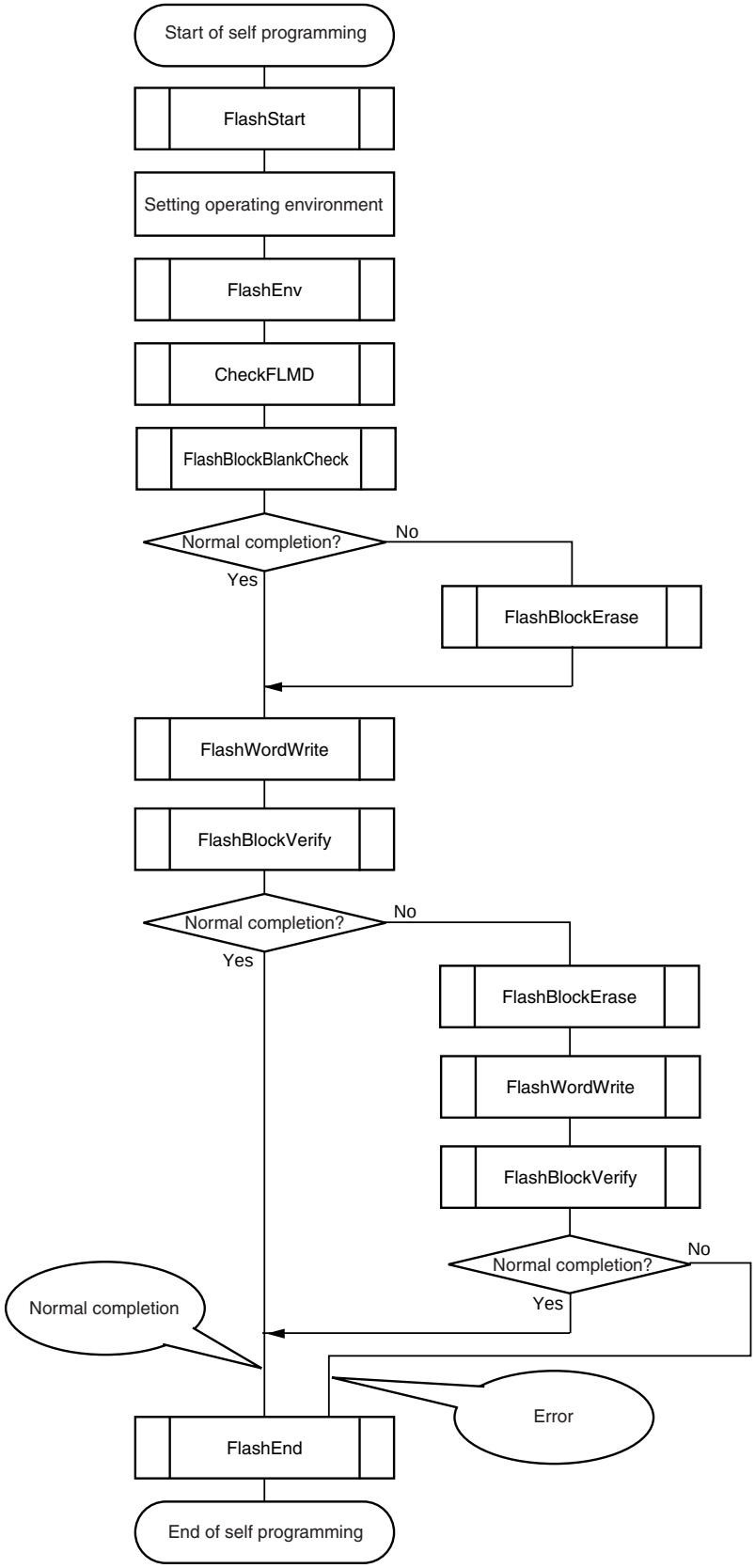

24.8.1 Boot swap function

If rewriting the boot area failed by temporary power failure or other reasons, restarting a program by resetting or overwriting is disabled due to data destruction in the boot area.

The boot swap function is used to avoid this problem.

Before erasing boot cluster 0[Note], which is a boot program area, by self-programming, write a new boot program to boot cluster 1 in advance. When the program has been correctly written to boot cluster 1, swap this boot cluster 1 and boot cluster 0 by using the set information function of the firmware of the 78K0R/Ix3, so that boot cluster 1 is used as a boot area. After that, erase or write the original boot program area, boot cluster 0.

As a result, even if a power failure occurs while the boot programming area is being rewritten, the program is executed correctly because it is booted from boot cluster 1 to be swapped when the program is reset and started next.

Note A boot cluster is a 4 KB area and boot clusters 0 and 1 are swapped by the boot swap function.

Figure 24-16. Boot Swap Function

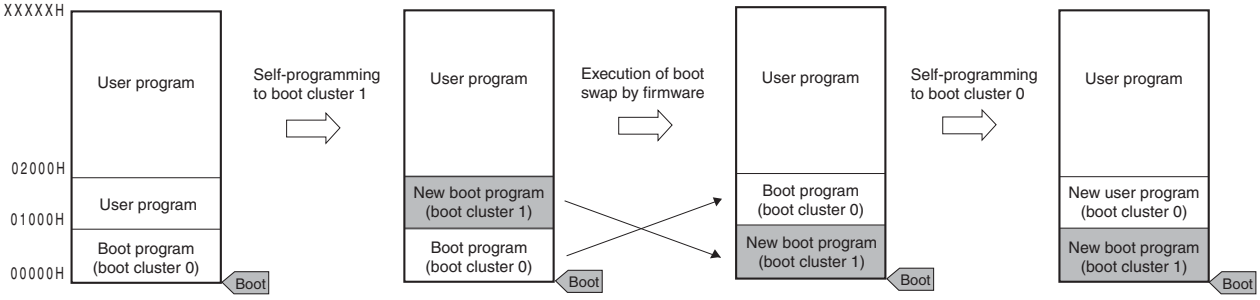

In an example of above figure, it is as follows.

Boot cluster 0: Boot program area before boot swap

Boot cluster 1: Boot program area after boot swap

Figure 24-17. Example of Executing Boot Swapping

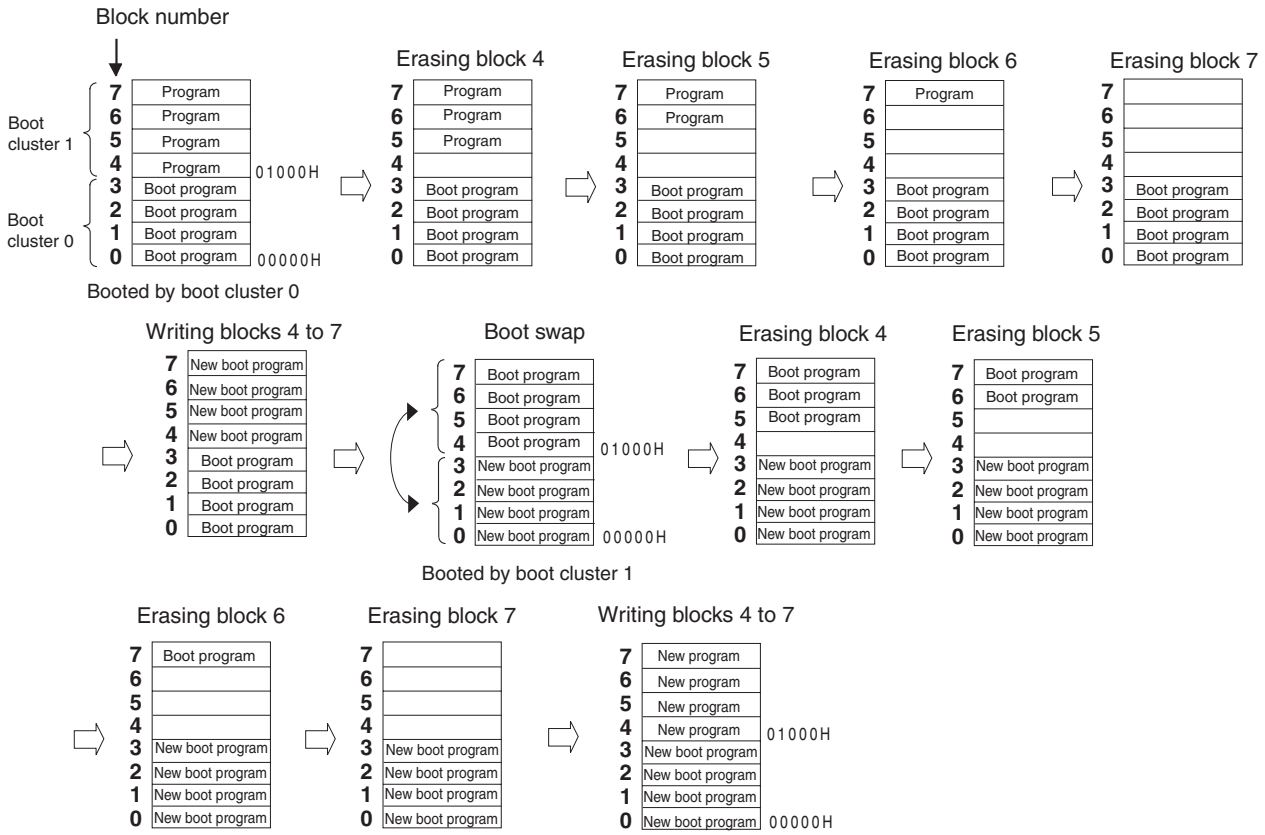

24.8.2 Flash shield window function

The flash shield window function is provided as one of the security functions for self programming. It disables writing to and erasing areas outside the range specified as a window only during self programming.

The window range can be set by specifying the start and end blocks. The window range can be set or changed during both on-board/off-board programming and self programming.

Writing to and erasing areas outside the window range are disabled during self programming. During on-board/off-board programming, however, areas outside the range specified as a window can be written and erased.

Figure 24-18. Flash Shield Window Setting Example
(Target Devices: μPD78F1215, 78F1225, 78F1235, Start Block: 04H, End Block: 06H)

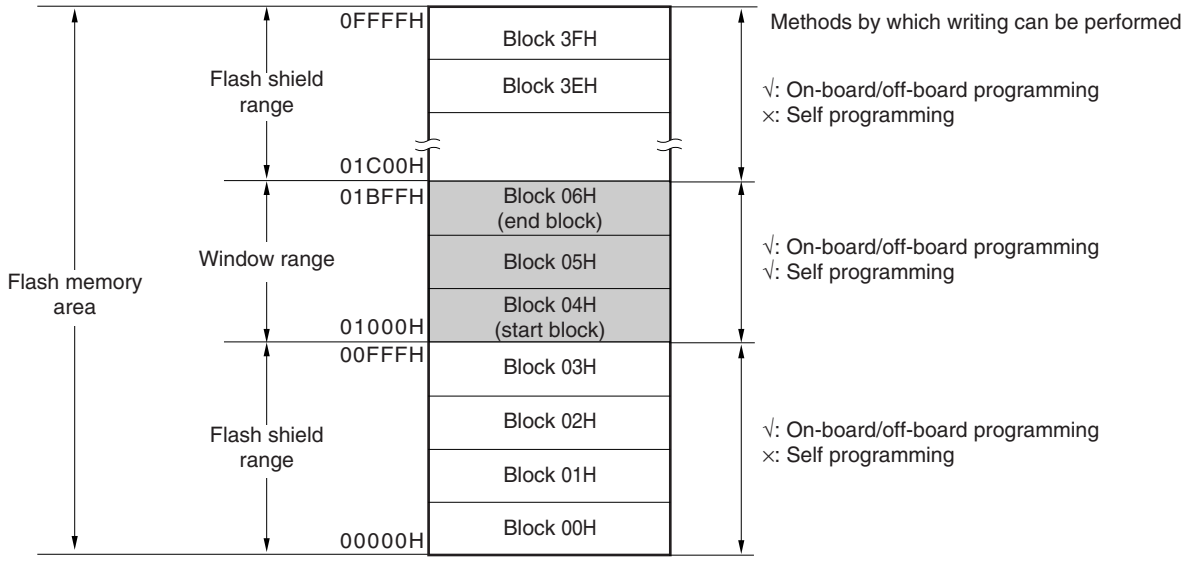

Caution If the rewrite-prohibited area of the boot cluster 0 overlaps with the flash shield window range, prohibition to rewrite the boot cluster 0 takes priority.

Table 24-9. Relationship Between Flash Shield Window Function Setting/Change Methods and Commands

Programming Conditions	Window Range Setting/Change Methods	Execution Commands	
		Block Erase	Write
Self-programming	Specify the starting and ending blocks by the set information library.	Block erasing is enabled only within the window range.	Writing is enabled only within the range of window range.
On-board/off-board programming	Specify the starting and ending blocks on GUI of dedicated flash memory programmer, etc.	Block erasing is enabled also outside the window range.	Writing is enabled also outside the window range.

Remark See **24.7 Security Settings** to prohibit writing/erasing during on-board/off-board programming.

25.1 Connecting QB-MINI2 to 78K0R/Ix3

The 78K0R/Ix3 uses the V_{DD}, FLMD0, $\overline{\text{RESET}}$, TOOL0, TOOL1[Note 1], and V_{SS} pins to communicate with the host machine via an on-chip debug emulator (QB-MINI2).

Caution The 78K0R/Ix3 has an on-chip debug function, which is provided for development and evaluation. Do not use the on-chip debug function in products designated for mass production, because the guaranteed number of rewritable times of the flash memory may be exceeded when this function is used, and product reliability therefore cannot be guaranteed. NEC Electronics is not liable for problems occurring when the on-chip debug function is used.

Figure 25-1. Connection Example of QB-MINI2 and 78K0R/Ix3

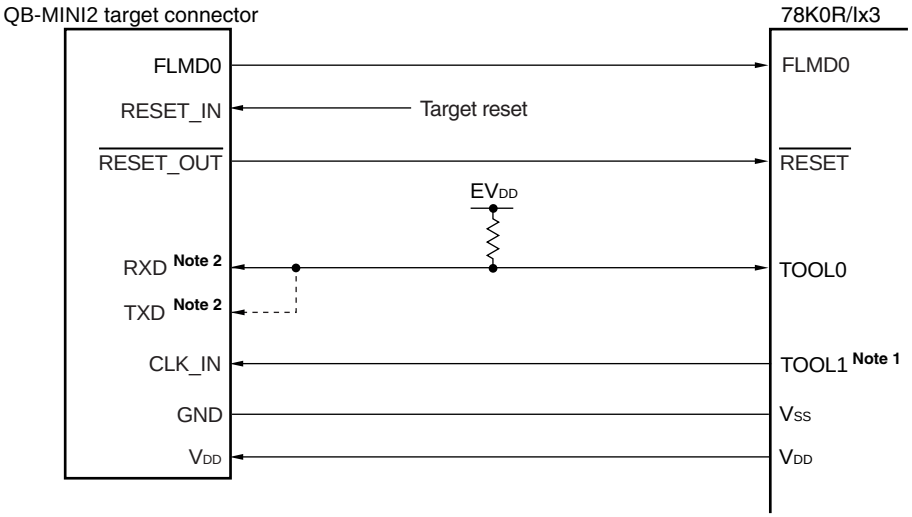

Notes 1. Connection is not required for communication in 1-line mode but required for communication in 2-line mode. At this time, perform necessary connections according to Table 2-2 Connection of Unused Pins since TOOL1 is an unused pin when QB-MINI2 is unconnected.

2. Connecting the dotted line is not necessary since RXD and TXD are shorted within QB-MIN2. When using the other flash memory programmer, RXD and TXD may not be shorted within the programmer. In this case, they must be shorted on the target system.

Caution When communicating in 2-line mode, a clock with a frequency of half that of the CPU clock frequency is output from the TOOL1 pin. A resistor or ferrite bead can be used as a countermeasure against fluctuation of the power supply caused by that clock.

Remark The FLMD0 pin is recommended to be open for self-programming in on-chip debugging. To pull down externally, use a resistor of 100 kΩ or more.

1-line mode (single line UART) using the TOOL0 pin or 2-line mode using the TOOL0 and TOOL1 pins is used for serial communication For flash memory programming, 1-line mode is used. 1-line mode or 2-line mode is used for on-chip debugging. Table 25-1 lists the differences between 1-line mode and 2-line mode.

Table 25-1. Lists the Differences Between 1-line Mode and 2-line Mode.

Communication mode	Flash memory programming function	Debugging function
1-line mode	Available	• Pseudo real-time RAM monitor (RRM) function not supported
2-line mode	None	• Pseudo real-time RAM monitor (RRM) function supported

Remark 2-line mode is not used for flash programming, however, even if TOOL1 pin is connected with CLK_IN of QB-MINI2, writing is performed normally with no problem.

25.2 On-Chip Debug Security ID

The 78K0R/Ix3 has an on-chip debug operation control bit in the flash memory at 000C3H (see **CHAPTER 23 OPTION BYTE**) and an on-chip debug security ID setting area at 000C4H to 000CDH, to prevent third parties from reading memory content.

When the boot swap function is used, also set a value that is the same as that of 010C3H and 010C4H to 010CDH in advance, because 000C3H, 000C4H to 000CDH and 010C3H, and 010C4H to 010CDH are switched.

For details on the on-chip debug security ID, refer to the **QB-MINI2 On-Chip Debug Emulator with Programming Function User's Manual (U18371E)**.

Table 25-2. On-Chip Debug Security ID

Address	On-Chip Debug Security ID
000C4H to 000CDH	Any ID code of 10 bytes
010C4H to 010CDH	

25.3 Securing of User Resources

To perform communication between the 78K0R/Ix3 and QB-MINI2, as well as each debug function, the securing of memory space must be done beforehand.

If NEC Electronics assembler RA78K0R or compiler CC78K0R is used, the items can be set by using linker options.

(1) Securement of memory space

The shaded portions in Figure 25-2 are the areas reserved for placing the debug monitor program, so user programs or data cannot be allocated in these spaces. When using the on-chip debug function, these spaces must be secured so as not to be used by the user program. Moreover, this area must not be rewritten by the user program.

Figure 25-2. Memory Spaces Where Debug Monitor Programs Are Allocated

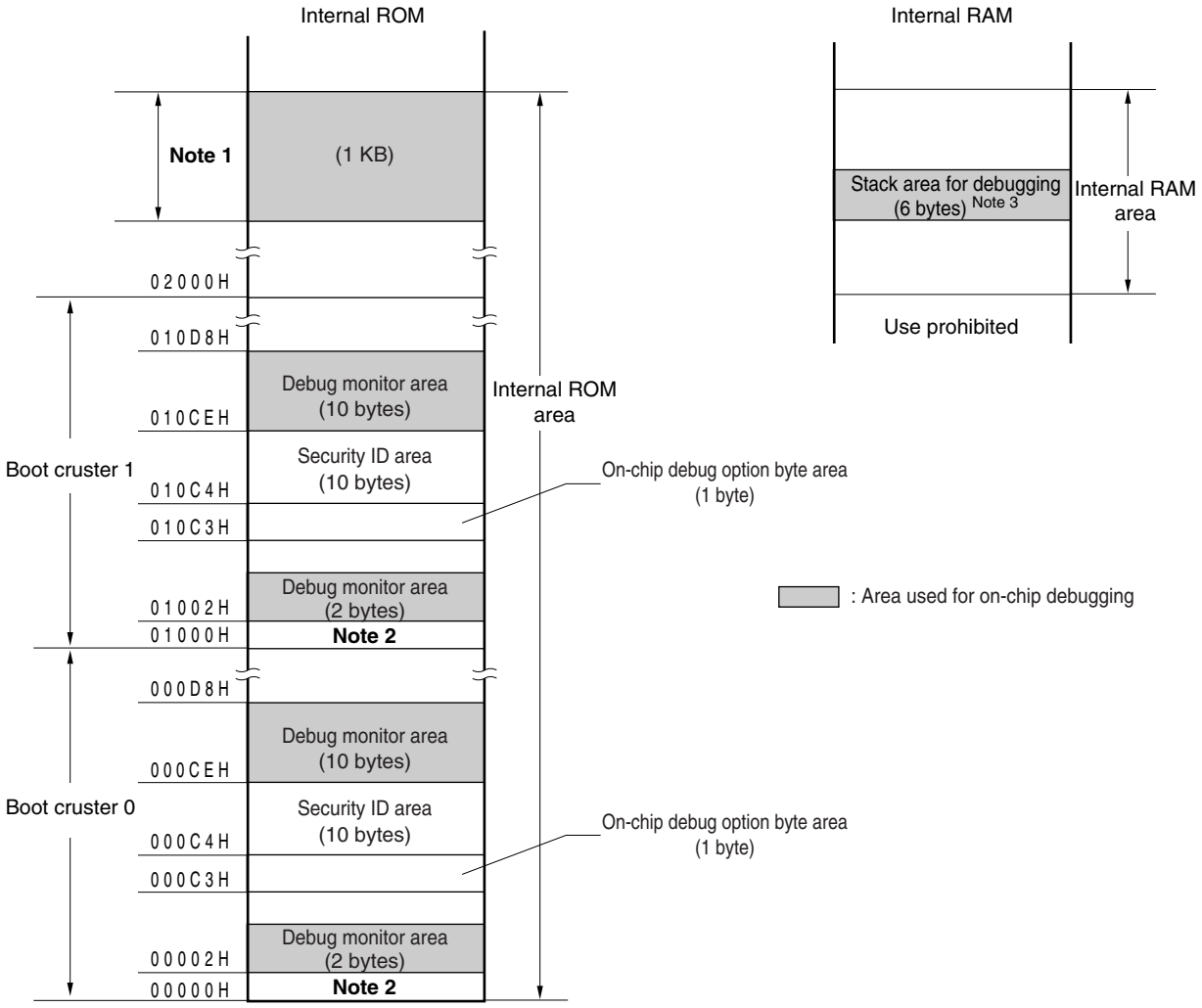

Notes 1. Address differs depending on products as follows.

Products ( ): Internal ROM	Address of Note 1
μPD78F1201, 78F1211 (16 KB)	03C00H-03FFFH
μPD78F1203, 78F1213, 78F1223, 78F1233 (32 KB)	07C00H-07FFFH
μPD78F1214, 78F1224, 78F1234 (48 KB)	0BC00H-0BFFFH
μPD78F1215, 78F1225, 78F1235 (64 KB)	0FC00H-0FFFFH

2. In debugging, reset vector is rewritten to address allocated to a monitor program.

3. Since this area is allocated immediately before the stack area, the address of this area varies depending on the stack increase and decrease. That is, 6 extra bytes are consumed for the stack area used.

For details of the way to secure of the memory space, refer to the **QB-MINI2 On-Chip Debug Emulator with Programming Function User's Manual (U18371E)**.

CHAPTER 26 BCD CORRECTION CIRCUIT

26.1 BCD Correction Circuit Function

The result of addition/subtraction of the BCD (binary-coded decimal) code and BCD code can be obtained as BCD code with this circuit.

The decimal correction operation result is obtained by performing addition/subtraction having the A register as the operand and then adding/ subtracting the BCDADJ register.

26.2 Registers Used by BCD Correction Circuit

The BCD correction circuit uses the following registers.

- BCD correction result register (BCDADJ)

(1) BCD correction result register (BCDADJ)

The BCDADJ register stores correction values for obtaining the add/subtract result as BCD code through add/subtract instructions using the A register as the operand.

The value read from the BCDADJ register varies depending on the value of the A register when it is read and those of the CY and AC flags.

BCDADJ is read by an 8-bit memory manipulation instruction.

Reset input sets this register to undefined.

Figure 26-1. Format of BCD Correction Result Register (BCDADJ)

Address: F00FEH After reset: undefined R

Symbol	7	6	5	4	3	2	1	0
BCDADJ								

26.3 BCD Correction Circuit Operation

The basic operation of the BCD correction circuit is as follows.

(1) Addition: Calculating the result of adding a BCD code value and another BCD code value by using a BCD code value

<1> The BCD code value to which addition is performed is stored in the A register.

<2> By adding the value of the A register and the second operand (value of one more BCD code to be added) as are in binary, the binary operation result is stored in the A register and the correction value is stored in the BCDADJ register.

<3> Decimal correction is performed by adding in binary the value of the A register (addition result in binary) and the BCDADJ register (correction value), and the correction result is stored in the A register and CY flag.

Caution The value read from the BCDADJ register varies depending on the value of the A register when it is read and those of the CY and AC flags. Therefore, execute the instruction <3> after the instruction <2> instead of executing any other instructions. To perform BCD correction in the interrupt enabled state, saving and restoring the A register is required within the interrupt function. PSW (CY flag and AC flag) is restored by the RETI instruction.

An example is shown below.

Examples 1: 99 + 89 = 188

Instruction	A Register	CY Flag	AC Flag	BCDADJ Register
`MOV A, #99H ; <1>`	99H	–	–	–
`ADD A, #89H ; <2>`	22H	1	1	66H
`ADD A, !BCDADJ ; <3>`	88H	1	0	–

Examples 2: 85 + 15 = 100

Instruction	A Register	CY Flag	AC Flag	BCDADJ Register
`MOV A, #85H ; <1>`	85H	–	–	–
`ADD A, #15H ; <2>`	9AH	0	0	66H
`ADD A, !BCDADJ ; <3>`	00H	1	1	–

Examples 3: 80 + 80 = 160

Instruction	A Register	CY Flag	AC Flag	BCDADJ Register
`MOV A, #80H ; <1>`	80H	–	–	–
`ADD A, #80H ; <2>`	00H	1	0	60H
`ADD A, !BCDADJ ; <3>`	60H	1	0	–

(2) Subtraction: Calculating the result of subtracting a BCD code value from another BCD code value by using a BCD code value

<1> The BCD code value from which subtraction is performed is stored in the A register.

<2> By subtracting the value of the second operand (value of BCD code to be subtracted) from the A register as is in binary, the calculation result in binary is stored in the A register, and the correction value is stored in the BCDADJ register.

<3> Decimal correction is performed by subtracting the value of the BCDADJ register (correction value) from the A register (subtraction result in binary) in binary, and the correction result is stored in the A register and CY flag.

Caution The value read from the BCDADJ register varies depending on the value of the A register when it is read and those of the CY and AC flags. Therefore, execute the instruction <3> after the instruction <2> instead of executing any other instructions. To perform BCD correction in the interrupt enabled state, saving and restoring the A register is required within the interrupt function. PSW (CY flag and AC flag) is restored by the RETI instruction.

An example is shown below.

Example: 91 − 52 = 39

Instruction	A Register	CY Flag	AC Flag	BCDADJ Register
`MOV A, #91H ; <1>`	91H	–	–	–
`SUB A, #52H ; <2>`	3FH	0	1	06H
`SUB A, !BCDADJ ; <3>`	39H	0	0	–

CHAPTER 27 INSTRUCTION SET

This chapter lists the instructions in the 78K0R microcontroller instruction set. For details of each operation and operation code, refer to the separate document **78K0R Microcontrollers Instructions User's Manual (U17792E)**.

Remark The shaded parts of the tables in **Table 27-5 Operation List** indicate the operation or instruction format that is newly added for the 78K0R microcontrollers.

27.1 Conventions Used in Operation List

27.1.1 Operand identifiers and specification methods

Operands are described in the “Operand” column of each instruction in accordance with the description method of the instruction operand identifier (refer to the assembler specifications for details). When there are two or more description methods, select one of them. Alphabetic letters in capitals and the symbols, #, !, !!, $, $!, [ ], and ES: are keywords and are described as they are. Each symbol has the following meaning.

- #: Immediate data specification
- !: 16-bit absolute address specification
- !!: 20-bit absolute address specification
- $: 8-bit relative address specification
- $!: 16-bit relative address specification
- [ ]: Indirect address specification
- ES:: Extension address specification

In the case of immediate data, describe an appropriate numeric value or a label. When using a label, be sure to describe the #, !, !!, $, $!, [ ], and ES: symbols.

For operand register identifiers, r and rp, either function names (X, A, C, etc.) or absolute names (names in parentheses in the table below, R0, R1, R2, etc.) can be used for description.

Table 27-1. Operand Identifiers and Specification Methods

Identifier	Description Method
r	X (R0), A (R1), C (R2), B (R3), E (R4), D (R5), L (R6), H (R7)
rp	AX (RP0), BC (RP1), DE (RP2), HL (RP3)
sfr	Special-function register symbol (SFR symbol) FFF00H to FFFFFH
sfrp	Special-function register symbols (16-bit manipulatable SFR symbol. Even addresses only[Note]) FFF00H to FFFFFH
saddr	FFE20H to FFF1FH Immediate data or labels
saddrp	FFE20H to FF1FH Immediate data or labels (even addresses only[Note])
addr20	00000H to FFFFFH Immediate data or labels
addr16	0000H to FFFFH Immediate data or labels (only even addresses for 16-bit data transfer instructions[Note])
addr5	0080H to 00BFH Immediate data or labels (even addresses only)
word	16-bit immediate data or label
byte	8-bit immediate data or label
bit	3-bit immediate data or label
RBn	RB0 to RB3

Note Bit 0 = 0 when an odd address is specified.

Remark The special function registers can be described to operand sfr as symbols. See **Table 3-5 SFR List** for the symbols of the special function registers.
The extended special function registers can be described to operand !addr16 as symbols. See **Table 3-6 Extended SFR (2nd SFR) List** for the symbols of the extended special function registers.

27.1.2 Description of operation column

The operation when the instruction is executed is shown in the “Operation” column using the following symbols.

Table 27-2. Symbols in “Operation” Column

Symbol	Function
A	A register; 8-bit accumulator
X	X register
B	B register
C	C register
D	D register
E	E register
H	H register
L	L register
ES	ES register
CS	CS register
AX	AX register pair; 16-bit accumulator
BC	BC register pair
DE	DE register pair
HL	HL register pair
PC	Program counter
SP	Stack pointer
PSW	Program status word
CY	Carry flag
AC	Auxiliary carry flag
Z	Zero flag
RBS	Register bank select flag
IE	Interrupt request enable flag
()	Memory contents indicated by address or register contents in parentheses
X_H, X_L X_S, X_H, X_L	16-bit registers: X_H = higher 8 bits, X_L = lower 8 bits 20-bit registers: X_S = (bits 19 to 16), X_H = (bits 15 to 8), X_L = (bits 7 to 0)
$\wedge$	Logical product (AND)
$\vee$	Logical sum (OR)
$\veebar$	Exclusive logical sum (exclusive OR)
$\overline{}$	Inverted data
addr5	16-bit immediate data (even addresses only in 0080H to 00BFH)
addr16	16-bit immediate data
addr20	20-bit immediate data
jdisp8	Signed 8-bit data (displacement value)
jdisp16	Signed 16-bit data (displacement value)

27.1.3 Description of flag operation column

The change of the flag value when the instruction is executed is shown in the “Flag” column using the following symbols.

Table 27-3. Symbols in “Flag” Column

Symbol	Change of Flag Value
(Blank)	Unchanged
0	Cleared to 0
1	Set to 1
×	Set/cleared according to the result
R	Previously saved value is restored

27.1.4 PREFIX instruction

Instructions with “ES:” have a PREFIX operation code as a prefix to extend the accessible data area to the 1 MB space (00000H to FFFFFH), by adding the ES register value to the 64 KB space from F0000H to FFFFFH. When a PREFIX operation code is attached as a prefix to the target instruction, only one instruction immediately after the PREFIX operation code is executed as the addresses with the ES register value added.

An interrupt is not acknowledged between a PREFIX instruction code and the instruction immediately after.

Table 27-4. Use Example of PREFIX Operation Code

Instruction	Opcode				
	1	2	3	4	5
MOV !addr16, #byte	CFH	!addr16		#byte	–
MOV ES:!addr16, #byte	11H	CFH	!addr16		#byte
MOV A, [HL]	8BH	–	–	–	–
MOV A, ES:[HL]	11H	8BH	–	–	–

Caution Set the ES register value with MOV ES, A, etc., before executing the PREFIX instruction.

27.2 Operation List

Table 27-5. Operation List (1/17)

Instruction Group	Mnemonic	Operands	Bytes	Clocks		Operation	Flag		
				Note 1	Note 2		Z	AC	CY
8-bit data transfer	MOV	r, #byte	2	1	–	r ← byte			
		saddr, #byte	3	1	–	(saddr) ← byte			
		sfr, #byte	3	1	–	sfr ← byte			
		!addr16, #byte	4	1	–	(addr16) ← byte			
		A, r Note 3	1	1	–	A ← r			
		r, A Note 3	1	1	–	r ← A			
		A, saddr	2	1	–	A ← (saddr)			
		saddr, A	2	1	–	(saddr) ← A			
		A, sfr	2	1	–	A ← sfr			
		sfr, A	2	1	–	sfr ← A			
		A, !addr16	3	1	4	A ← (addr16)			
		!addr16, A	3	1	–	(addr16) ← A			
		PSW, #byte	3	3	–	PSW ← byte	×	×	×
		A, PSW	2	1	–	A ← PSW			
		PSW, A	2	3	–	PSW ← A	×	×	×
		ES, #byte	2	1	–	ES ← byte			
		ES, saddr	3	1	–	ES ← (saddr)			
		A, ES	2	1	–	A ← ES			
		ES, A	2	1	–	ES ← A			
		CS, #byte	3	1	–	CS ← byte			
		A, CS	2	1	–	A ← CS			
		CS, A	2	1	–	CS ← A			
		A, [DE]	1	1	4	A ← (DE)			
		[DE], A	1	1	–	(DE) ← A			
		[DE + byte], #byte	3	1	–	(DE + byte) ← byte			
		A, [DE + byte]	2	1	4	A ← (DE + byte)			
		[DE + byte], A	2	1	–	(DE + byte) ← A			
		A, [HL]	1	1	4	A ← (HL)			
		[HL], A	1	1	–	(HL) ← A			
		[HL + byte], #byte	3	1	–	(HL + byte) ← byte			

Notes 1. When the internal RAM area, SFR area, or extended SFR area is accessed, or for an instruction with no data access.

2. When the program memory area is accessed.

3. Except r = A

Remarks 1. One instruction clock cycle is one cycle of the CPU clock (f_{CPU}) selected by the system clock control register (CKC).

2. This number of clocks is for when the program is in the internal ROM (flash memory) area. When fetching an instruction from the internal RAM area, the number of clocks is twice the number of clocks plus 3, maximum.

Table 27-5. Operation List (2/17)

Instruction Group	Mnemonic	Operands	Bytes	Clocks		Operation	Flag
				Note 1	Note 2		Z AC CY
8-bit data transfer	MOV	A, [HL + byte]	2	1	4	A ← (HL + byte)	
		[HL + byte], A	2	1	–	(HL + byte) ← A	
		A, [HL + B]	2	1	4	A ← (HL + B)	
		[HL + B], A	2	1	–	(HL + B) ← A	
		A, [HL + C]	2	1	4	A ← (HL + C)	
		[HL + C], A	2	1	–	(HL + C) ← A	
		word[B], #byte	4	1	–	(B + word) ← byte	
		A, word[B]	3	1	4	A ← (B + word)	
		word[B], A	3	1	–	(B + word) ← A	
		word[C], #byte	4	1	–	(C + word) ← byte	
		A, word[C]	3	1	4	A ← (C + word)	
		word[C], A	3	1	–	(C + word) ← A	
		word[BC], #byte	4	1	–	(BC + word) ← byte	
		A, word[BC]	3	1	4	A ← (BC + word)	
		word[BC], A	3	1	–	(BC + word) ← A	
		[SP + byte], #byte	3	1	–	(SP + byte) ← byte	
		A, [SP + byte]	2	1	–	A ← (SP + byte)	
		[SP + byte], A	2	1	–	(SP + byte) ← A	
		B, saddr	2	1	–	B ← (saddr)	
		B, !addr16	3	1	4	B ← (addr16)	
		C, saddr	2	1	–	C ← (saddr)	
		C, !addr16	3	1	4	C ← (addr16)	
		X, saddr	2	1	–	X ← (saddr)	
		X, !addr16	3	1	4	X ← (addr16)	
		ES:!addr16, #byte	5	2	–	(ES, addr16) ← byte	
		A, ES:!addr16	4	2	5	A ← (ES, addr16)	
		ES:!addr16, A	4	2	–	(ES, addr16) ← A	
		A, ES:[DE]	2	2	5	A ← (ES, DE)	
		ES:[DE], A	2	2	–	(ES, DE) ← A	
		ES:[DE + byte],#byte	4	2	–	((ES, DE) + byte) ← byte	
		A, ES:[DE + byte]	3	2	5	A ← ((ES, DE) + byte)	
		ES:[DE + byte], A	3	2	–	((ES, DE) + byte) ← A	

Notes 1. When the internal RAM area, SFR area, or extended SFR area is accessed, or for an instruction with no data access.

2. When the program memory area is accessed.

Remarks 1. One instruction clock cycle is one cycle of the CPU clock (f_{CPU}) selected by the system clock control register (CKC).

2. This number of clocks is for when the program is in the internal ROM (flash memory) area. When fetching an instruction from the internal RAM area, the number of clocks is twice the number of clocks plus 3, maximum.

Table 27-5. Operation List (3/17)

Instruction Group	Mnemonic	Operands	Bytes	Clocks		Operation	Flag
				Note 1	Note 2		Z AC CY
8-bit data transfer	MOV	A, ES:[HL]	2	2	5	A ← (ES, HL)	
		ES:[HL], A	2	2	–	(ES, HL) ← A	
		ES:[HL + byte],#byte	4	2	–	((ES, HL) + byte) ← byte	
		A, ES:[HL + byte]	3	2	5	A ← ((ES, HL) + byte)	
		ES:[HL + byte], A	3	2	–	((ES, HL) + byte) ← A	
		A, ES:[HL + B]	3	2	5	A ← ((ES, HL) + B)	
		ES:[HL + B], A	3	2	–	((ES, HL) + B) ← A	
		A, ES:[HL + C]	3	2	5	A ← ((ES, HL) + C)	
		ES:[HL + C], A	3	2	–	((ES, HL) + C) ← A	
		ES:word[B], #byte	5	2	–	((ES, B) + word) ← byte	
		A, ES:word[B]	4	2	5	A ← ((ES, B) + word)	
		ES:word[B], A	4	2	–	((ES, B) + word) ← A	
		ES:word[C], #byte	5	2	–	((ES, C) + word) ← byte	
		A, ES:word[C]	4	2	5	A ← ((ES, C) + word)	
		ES:word[C], A	4	2	–	((ES, C) + word) ← A	
		ES:word[BC], #byte	5	2	–	((ES, BC) + word) ← byte	
		A, ES:word[BC]	4	2	5	A ← ((ES, BC) + word)	
		ES:word[BC], A	4	2	–	((ES, BC) + word) ← A	
		B, ES:!addr16	4	2	5	B ← (ES, addr16)	
		C, ES:!addr16	4	2	5	C ← (ES, addr16)	
		X, ES:!addr16	4	2	5	X ← (ES, addr16)	
	XCH	A, r Note 3	1 (r = X) 2 (other than r = X)	1	–	A ←→ r	
		A, saddr	3	2	–	A ←→ (saddr)	
		A, sfr	3	2	–	A ←→ sfr	
		A, !addr16	4	2	–	A ←→ (addr16)	
		A, [DE]	2	2	–	A ←→ (DE)	
		A, [DE + byte]	3	2	–	A ←→ (DE + byte)	
		A, [HL]	2	2	–	A ←→ (HL)	
		A, [HL + byte]	3	2	–	A ←→ (HL + byte)	
		A, [HL + B]	2	2	–	A ←→ (HL + B)	
		A, [HL + C]	2	2	–	A ←→ (HL + C)	

Notes 1. When the internal RAM area, SFR area, or extended SFR area is accessed, or for an instruction with no data access.

2. When the program memory area is accessed.

3. Except r = A

Remarks 1. One instruction clock cycle is one cycle of the CPU clock (f_{CPU}) selected by the system clock control register (CKC).

2. This number of clocks is for when the program is in the internal ROM (flash memory) area. When fetching an instruction from the internal RAM area, the number of clocks is twice the number of clocks plus 3, maximum.

Table 27-5. Operation List (4/17)

Instruction Group	Mnemonic	Operands	Bytes	Clocks		Operation	Flag		
				Note 1	Note 2		Z	AC	CY
8-bit data transfer	XCH	A, ES:!addr16	5	3	–	A ←→ (ES, addr16)			
		A, ES:[DE]	3	3	–	A ←→ (ES, DE)			
		A, ES:[DE + byte]	4	3	–	A ←→ ((ES, DE) + byte)			
		A, ES:[HL]	3	3	–	A ←→ (ES, HL)			
		A, ES:[HL + byte]	4	3	–	A ←→ ((ES, HL) + byte)			
		A, ES:[HL + B]	3	3	–	A ←→ ((ES, HL) + B)			
		A, ES:[HL + C]	3	3	–	A ←→ ((ES, HL) + C)			
	ONEB	A	1	1	–	A ← 01H			
		X	1	1	–	X ← 01H			
		B	1	1	–	B ← 01H			
		C	1	1	–	C ← 01H			
		saddr	2	1	–	(saddr) ← 01H			
		!addr16	3	1	–	(addr16) ← 01H			
		ES:!addr16	4	2	–	(ES, addr16) ← 01H			
	CLRB	A	1	1	–	A ← 00H			
		X	1	1	–	X ← 00H			
		B	1	1	–	B ← 00H			
		C	1	1	–	C ← 00H			
		saddr	2	1	–	(saddr) ← 00H			
		!addr16	3	1	–	(addr16) ← 00H			
		ES:!addr16	4	2	–	(ES,addr16) ← 00H			
	MOVS	[HL + byte], X	3	1	–	(HL + byte) ← X	×		×
		ES:[HL + byte], X	4	2	–	(ES, HL + byte) ← X	×		×
16-bit data transfer	MOVW	rp, #word	3	1	–	rp ← word			
		saddrp, #word	4	1	–	(saddrp) ← word			
		sfrp, #word	4	1	–	sfrp ← word			
		AX, saddrp	2	1	–	AX ← (saddrp)			
		saddrp, AX	2	1	–	(saddrp) ← AX			
		AX, sfrp	2	1	–	AX ← sfrp			
		sfrp, AX	2	1	–	sfrp ← AX			
		AX, rp Note 3	1	1	–	AX ← rp			
		rp, AX Note 3	1	1	–	rp ← AX			

Notes 1. When the internal RAM area, SFR area, or extended SFR area is accessed, or for an instruction with no data access.

2. When the program memory area is accessed.

3. Except rp = AX

Remarks 1. One instruction clock cycle is one cycle of the CPU clock (f_{CPU}) selected by the system clock control register (CKC).

2. This number of clocks is for when the program is in the internal ROM (flash memory) area. When fetching an instruction from the internal RAM area, the number of clocks is twice the number of clocks plus 3, maximum.

Table 27-5. Operation List (5/17)

Instruction Group	Mnemonic	Operands	Bytes	Clocks		Operation	Flag
				Note 1	Note 2		Z AC CY
16-bit data transfer	MOVW	AX, !addr16	3	1	4	AX ← (addr16)	
		!addr16, AX	3	1	–	(addr16) ← AX	
		AX, [DE]	1	1	4	AX ← (DE)	
		[DE], AX	1	1	–	(DE) ← AX	
		AX, [DE + byte]	2	1	4	AX ← (DE + byte)	
		[DE + byte], AX	2	1	–	(DE + byte) ← AX	
		AX, [HL]	1	1	4	AX ← (HL)	
		[HL], AX	1	1	–	(HL) ← AX	
		AX, [HL + byte]	2	1	4	AX ← (HL + byte)	
		[HL + byte], AX	2	1	–	(HL + byte) ← AX	
		AX, word[B]	3	1	4	AX ← (B + word)	
		word[B], AX	3	1	–	(B + word) ← AX	
		AX, word[C]	3	1	4	AX ← (C + word)	
		word[C], AX	3	1	–	(C + word) ← AX	
		AX, word[BC]	3	1	4	AX ← (BC + word)	
		word[BC], AX	3	1	–	(BC + word) ← AX	
		AX, [SP + byte]	2	1	–	AX ← (SP + byte)	
		[SP + byte], AX	2	1	–	(SP + byte) ← AX	
		BC, saddrp	2	1	–	BC ← (saddrp)	
		BC, !addr16	3	1	4	BC ← (addr16)	
		DE, saddrp	2	1	–	DE ← (saddrp)	
		DE, !addr16	3	1	4	DE ← (addr16)	
		HL, saddrp	2	1	–	HL ← (saddrp)	
		HL, !addr16	3	1	4	HL ← (addr16)	
		AX, ES:!addr16	4	2	5	AX ← (ES, addr16)	
		ES:!addr16, AX	4	2	–	(ES, addr16) ← AX	
		AX, ES:[DE]	2	2	5	AX ← (ES, DE)	
		ES:[DE], AX	2	2	–	(ES, DE) ← AX	
		AX, ES:[DE + byte]	3	2	5	AX ← ((ES, DE) + byte)	
		ES:[DE + byte], AX	3	2	–	((ES, DE) + byte) ← AX	
		AX, ES:[HL]	2	2	5	AX ← (ES, HL)	
		ES:[HL], AX	2	2	–	(ES, HL) ← AX	

Notes 1. When the internal RAM area, SFR area, or extended SFR area is accessed, or for an instruction with no data access.

2. When the program memory area is accessed.

Remarks 1. One instruction clock cycle is one cycle of the CPU clock (f_{CPU}) selected by the system clock control register (CKC).

2. This number of clocks is for when the program is in the internal ROM (flash memory) area. When fetching an instruction from the internal RAM area, the number of clocks is twice the number of clocks plus 3, maximum.

Table 27-5. Operation List (6/17)

Instruction Group	Mnemonic	Operands	Bytes	Clocks		Operation	Flag		
				Note 1	Note 2		Z	AC	CY
16-bit data transfer	MOVW	AX, ES:[HL + byte]	3	2	5	AX ← ((ES, HL) + byte)			
		ES:[HL + byte], AX	3	2	–	((ES, HL) + byte) ← AX			
		AX, ES:word[B]	4	2	5	AX ← ((ES, B) + word)			
		ES:word[B], AX	4	2	–	((ES, B) + word) ← AX			
		AX, ES:word[C]	4	2	5	AX ← ((ES, C) + word)			
		ES:word[C], AX	4	2	–	((ES, C) + word) ← AX			
		AX, ES:word[BC]	4	2	5	AX ← ((ES, BC) + word)			
		ES:word[BC], AX	4	2	–	((ES, BC) + word) ← AX			
		BC, ES:!addr16	4	2	5	BC ← (ES, addr16)			
		DE, ES:!addr16	4	2	5	DE ← (ES, addr16)			
		HL, ES:!addr16	4	2	5	HL ← (ES, addr16)			
	XCHW	AX, rp Note 3	1	1	–	AX ←→ rp			
	ONEW	AX	1	1	–	AX ← 0001H			
		BC	1	1	–	BC ← 0001H			
	CLRW	AX	1	1	–	AX ← 0000H			
		BC	1	1	–	BC ← 0000H			
8-bit operation	ADD	A, #byte	2	1	–	A, CY ← A + byte	×	×	×
		saddr, #byte	3	2	–	(saddr), CY ← (saddr) + byte	×	×	×
		A, r Note 4	2	1	–	A, CY ← A + r	×	×	×
		r, A	2	1	–	r, CY ← r + A	×	×	×
		A, saddr	2	1	–	A, CY ← A + (saddr)	×	×	×
		A, !addr16	3	1	4	A, CY ← A + (addr16)	×	×	×
		A, [HL]	1	1	4	A, CY ← A + (HL)	×	×	×
		A, [HL + byte]	2	1	4	A, CY ← A + (HL + byte)	×	×	×
		A, [HL + B]	2	1	4	A, CY ← A + (HL + B)	×	×	×
		A, [HL + C]	2	1	4	A, CY ← A + (HL + C)	×	×	×
		A, ES:!addr16	4	2	5	A, CY ← A + (ES, addr16)	×	×	×
		A, ES:[HL]	2	2	5	A,CY ← A + (ES, HL)	×	×	×
		A, ES:[HL + byte]	3	2	5	A,CY ← A + ((ES, HL) + byte)	×	×	×
		A, ES:[HL + B]	3	2	5	A,CY ← A + ((ES, HL) + B)	×	×	×
		A, ES:[HL + C]	3	2	5	A,CY ← A + ((ES, HL) + C)	×	×	×

Notes 1. When the internal RAM area, SFR area, or extended SFR area is accessed, or for an instruction with no data access.

2. When the program memory area is accessed.

3. Except rp = AX

4. Except r = A

Remarks 1. One instruction clock cycle is one cycle of the CPU clock (f_{CPU}) selected by the system clock control register (CKC).

2. This number of clocks is for when the program is in the internal ROM (flash memory) area. When fetching an instruction from the internal RAM area, the number of clocks is twice the number of clocks plus 3, maximum.

Table 27-5. Operation List (7/17)

Instruction Group	Mnemonic	Operands	Bytes	Clocks		Operation	Flag		
				Note 1	Note 2		Z	AC	CY
8-bit operation	ADDC	A, #byte	2	1	–	A, CY ← A + byte + CY	×	×	×
		saddr, #byte	3	2	–	(saddr), CY ← (saddr) + byte + CY	×	×	×
		A, r Note 3	2	1	–	A, CY ← A + r + CY	×	×	×
		r, A	2	1	–	r, CY ← r + A + CY	×	×	×
		A, saddr	2	1	–	A, CY ← A + (saddr) + CY	×	×	×
		A, !addr16	3	1	4	A, CY ← A + (addr16) + CY	×	×	×
		A, [HL]	1	1	4	A, CY ← A + (HL) + CY	×	×	×
		A, [HL + byte]	2	1	4	A, CY ← A + (HL + byte) + CY	×	×	×
		A, [HL + B]	2	1	4	A, CY ← A + (HL + B) + CY	×	×	×
		A, [HL + C]	2	1	4	A, CY ← A + (HL + C) + CY	×	×	×
		A, ES:!addr16	4	2	5	A, CY ← A + (ES, addr16) + CY	×	×	×
		A, ES:[HL]	2	2	5	A, CY ← A + (ES, HL) + CY	×	×	×
		A, ES:[HL + byte]	3	2	5	A, CY ← A + ((ES, HL) + byte) + CY	×	×	×
		A, ES:[HL + B]	3	2	5	A, CY ← A + ((ES, HL) + B) + CY	×	×	×
		A, ES:[HL + C]	3	2	5	A, CY ← A + ((ES, HL) + C) + CY	×	×	×
	SUB	A, #byte	2	1	–	A, CY ← A – byte	×	×	×
		saddr, #byte	3	2	–	(saddr), CY ← (saddr) – byte	×	×	×
		A, r Note 3	2	1	–	A, CY ← A – r	×	×	×
		r, A	2	1	–	r, CY ← r – A	×	×	×
		A, saddr	2	1	–	A, CY ← A – (saddr)	×	×	×
		A, !addr16	3	1	4	A, CY ← A – (addr16)	×	×	×
		A, [HL]	1	1	4	A, CY ← A – (HL)	×	×	×
		A, [HL + byte]	2	1	4	A, CY ← A – (HL + byte)	×	×	×
		A, [HL + B]	2	1	4	A, CY ← A – (HL + B)	×	×	×
		A, [HL + C]	2	1	4	A, CY ← A – (HL + C)	×	×	×
		A, ES:!addr16	4	2	5	A, CY ← A – (ES:addr16)	×	×	×
		A, ES:[HL]	2	2	5	A, CY ← A – (ES:HL)	×	×	×
		A, ES:[HL + byte]	3	2	5	A, CY ← A – ((ES:HL) + byte)	×	×	×
		A, ES:[HL + B]	3	2	5	A, CY ← A – ((ES:HL) + B)	×	×	×
		A, ES:[HL + C]	3	2	5	A, CY ← A – ((ES:HL) + C)	×	×	×

Notes 1. When the internal RAM area, SFR area, or extended SFR area is accessed, or for an instruction with no data access.

2. When the program memory area is accessed.

3. Except r = A

Remarks 1. One instruction clock cycle is one cycle of the CPU clock (f_{CPU}) selected by the system clock control register (CKC).

2. This number of clocks is for when the program is in the internal ROM (flash memory) area. When fetching an instruction from the internal RAM area, the number of clocks is twice the number of clocks plus 3, maximum.

Table 27-5. Operation List (8/17)

Instruction Group	Mnemonic	Operands	Bytes	Clocks		Operation	Flag		
				Note 1	Note 2		Z	AC	CY
8-bit operation	SUBC	A, #byte	2	1	–	A, CY ← A – byte – CY	×	×	×
		saddr, #byte	3	2	–	(saddr), CY ← (saddr) – byte – CY	×	×	×
		A, r Note 3	2	1	–	A, CY ← A – r – CY	×	×	×
		r, A	2	1	–	r, CY ← r – A – CY	×	×	×
		A, saddr	2	1	–	A, CY ← A – (saddr) – CY	×	×	×
		A, !addr16	3	1	4	A, CY ← A – (addr16) – CY	×	×	×
		A, [HL]	1	1	4	A, CY ← A – (HL) – CY	×	×	×
		A, [HL + byte]	2	1	4	A, CY ← A – (HL + byte) – CY	×	×	×
		A, [HL + B]	2	1	4	A, CY ← A – (HL + B) – CY	×	×	×
		A, [HL + C]	2	1	4	A, CY ← A – (HL + C) – CY	×	×	×
		A, ES:!addr16	4	2	5	A, CY ← A – (ES:addr16) – CY	×	×	×
		A, ES:[HL]	2	2	5	A, CY ← A – (ES:HL) – CY	×	×	×
		A, ES:[HL + byte]	3	2	5	A, CY ← A – ((ES:HL) + byte) – CY	×	×	×
		A, ES:[HL + B]	3	2	5	A, CY ← A – ((ES:HL) + B) – CY	×	×	×
		A, ES:[HL + C]	3	2	5	A, CY ← A – ((ES:HL) + C) – CY	×	×	×
	AND	A, #byte	2	1	–	A ← A ∧ byte	×		
		saddr, #byte	3	2	–	(saddr) ← (saddr) ∧ byte	×		
		A, r Note 3	2	1	–	A ← A ∧ r	×		
		r, A	2	1	–	r ← r ∧ A	×		
		A, saddr	2	1	–	A ← A ∧ (saddr)	×		
		A, !addr16	3	1	4	A ← A ∧ (addr16)	×		
		A, [HL]	1	1	4	A ← A ∧ (HL)	×		
		A, [HL + byte]	2	1	4	A ← A ∧ (HL + byte)	×		
		A, [HL + B]	2	1	4	A ← A ∧ (HL + B)	×		
		A, [HL + C]	2	1	4	A ← A ∧ (HL + C)	×		
		A, ES:!addr16	4	2	5	A ← A ∧ (ES:addr16)	×		
		A, ES:[HL]	2	2	5	A ← A ∧ (ES:HL)	×		
		A, ES:[HL + byte]	3	2	5	A ← A ∧ ((ES:HL) + byte)	×		
		A, ES:[HL + B]	3	2	5	A ← A ∧ ((ES:HL) + B)	×		
		A, ES:[HL + C]	3	2	5	A ← A ∧ ((ES:HL) + C)	×		

Notes 1. When the internal RAM area, SFR area, or extended SFR area is accessed, or for an instruction with no data access.

2. When the program memory area is accessed.

3. Except r = A

Remarks 1. One instruction clock cycle is one cycle of the CPU clock (f_{CPU}) selected by the system clock control register (CKC).

2. This number of clocks is for when the program is in the internal ROM (flash memory) area. When fetching an instruction from the internal RAM area, the number of clocks is twice the number of clocks plus 3, maximum.

Table 27-5. Operation List (9/17)

Instruction Group	Mnemonic	Operands	Bytes	Clocks		Operation	Flag
				Note 1	Note 2		Z AC CY
8-bit operation	OR	A, #byte	2	1	–	A ← A ∨ byte	×
		saddr, #byte	3	2	–	(saddr) ← (saddr) ∨ byte	×
		A, r Note 3	2	1	–	A ← A ∨ r	×
		r, A	2	1	–	r ← r ∨ A	×
		A, saddr	2	1	–	A ← A ∨ (saddr)	×
		A, !addr16	3	1	4	A ← A ∨ (addr16)	×
		A, [HL]	1	1	4	A ← A ∨ (HL)	×
		A, [HL + byte]	2	1	4	A ← A ∨ (HL + byte)	×
		A, [HL + B]	2	1	4	A ← A ∨ (HL + B)	×
		A, [HL + C]	2	1	4	A ← A ∨ (HL + C)	×
		A, ES:!addr16	4	2	5	A ← A ∨ (ES:addr16)	×
		A, ES:[HL]	2	2	5	A ← A ∨ (ES:HL)	×
		A, ES:[HL + byte]	3	2	5	A ← A ∨ ((ES:HL) + byte)	×
		A, ES:[HL + B]	3	2	5	A ← A ∨ ((ES:HL) + B)	×
		A, ES:[HL + C]	3	2	5	A ← A ∨ ((ES:HL) + C)	×
	XOR	A, #byte	2	1	–	A ← A ⊻ byte	×
		saddr, #byte	3	2	–	(saddr) ← (saddr) ⊻ byte	×
		A, r Note 3	2	1	–	A ← A ⊻ r	×
		r, A	2	1	–	r ← r ⊻ A	×
		A, saddr	2	1	–	A ← A ⊻ (saddr)	×
		A, !addr16	3	1	4	A ← A ⊻ (addr16)	×
		A, [HL]	1	1	4	A ← A ⊻ (HL)	×
		A, [HL + byte]	2	1	4	A ← A ⊻ (HL + byte)	×
		A, [HL + B]	2	1	4	A ← A ⊻ (HL + B)	×
		A, [HL + C]	2	1	4	A ← A ⊻ (HL + C)	×
		A, ES:!addr16	4	2	5	A ← A ⊻ (ES:addr16)	×
		A, ES:[HL]	2	2	5	A ← A ⊻ (ES:HL)	×
		A, ES:[HL + byte]	3	2	5	A ← A ⊻ ((ES:HL) + byte)	×
		A, ES:[HL + B]	3	2	5	A ← A ⊻ ((ES:HL) + B)	×
		A, ES:[HL + C]	3	2	5	A ← A ⊻ ((ES:HL) + C)	×

Notes 1. When the internal RAM area, SFR area, or extended SFR area is accessed, or for an instruction with no data access.

2. When the program memory area is accessed.

3. Except r = A

Remarks 1. One instruction clock cycle is one cycle of the CPU clock (f_{CPU}) selected by the system clock control register (CKC).

2. This number of clocks is for when the program is in the internal ROM (flash memory) area. When fetching an instruction from the internal RAM area, the number of clocks is twice the number of clocks plus 3, maximum.

Table 27-5. Operation List (10/17)

Instruction Group	Mnemonic	Operands	Bytes	Clocks		Operation	Flag		
				Note 1	Note 2		Z	AC	CY
8-bit operation	CMP	A, #byte	2	1	–	A – byte	×	×	×
		saddr, #byte	3	1	–	(saddr) – byte	×	×	×
		A, r Note 3	2	1	–	A – r	×	×	×
		r, A	2	1	–	r – A	×	×	×
		A, saddr	2	1	–	A – (saddr)	×	×	×
		A, !addr16	3	1	4	A – (addr16)	×	×	×
		A, [HL]	1	1	4	A – (HL)	×	×	×
		A, [HL + byte]	2	1	4	A – (HL + byte)	×	×	×
		A, [HL + B]	2	1	4	A – (HL + B)	×	×	×
		A, [HL + C]	2	1	4	A – (HL + C)	×	×	×
		!addr16, #byte	4	1	4	(addr16) – byte	×	×	×
		A, ES:!addr16	4	2	5	A – (ES:addr16)	×	×	×
		A, ES:[HL]	2	2	5	A – (ES:HL)	×	×	×
		A, ES:[HL + byte]	3	2	5	A – ((ES:HL) + byte)	×	×	×
		A, ES:[HL + B]	3	2	5	A – ((ES:HL) + B)	×	×	×
		A, ES:[HL + C]	3	2	5	A – ((ES:HL) + C)	×	×	×
		ES:!addr16, #byte	5	2	5	(ES:addr16) – byte	×	×	×
	CMP0	A	1	1	–	A – 00H	×	×	×
		X	1	1	–	X – 00H	×	×	×
		B	1	1	–	B – 00H	×	×	×
		C	1	1	–	C – 00H	×	×	×
		saddr	2	1	–	(saddr) – 00H	×	×	×
		!addr16	3	1	4	(addr16) – 00H	×	×	×
		ES:!addr16	4	2	5	(ES:addr16) – 00H	×	×	×
	CMPS	X, [HL + byte]	3	1	4	X – (HL + byte)	×	×	×
		X, ES:[HL + byte]	4	2	5	X – ((ES:HL) + byte)	×	×	×

Notes 1. When the internal RAM area, SFR area, or extended SFR area is accessed, or for an instruction with no data access.

2. When the program memory area is accessed.

3. Except r = A

Remarks 1. One instruction clock cycle is one cycle of the CPU clock (f_{CPU}) selected by the system clock control register (CKC).

2. This number of clocks is for when the program is in the internal ROM (flash memory) area. When fetching an instruction from the internal RAM area, the number of clocks is twice the number of clocks plus 3, maximum.

Table 27-5. Operation List (11/17)

Instruction Group	Mnemonic	Operands	Bytes	Clocks		Operation	Flag		
				Note 1	Note 2		Z	AC	CY
16-bit operation	ADDW	AX, #word	3	1	–	AX, CY ← AX + word	×	×	×
		AX, AX	1	1	–	AX, CY ← AX + AX	×	×	×
		AX, BC	1	1	–	AX, CY ← AX + BC	×	×	×
		AX, DE	1	1	–	AX, CY ← AX + DE	×	×	×
		AX, HL	1	1	–	AX, CY ← AX + HL	×	×	×
		AX, saddrp	2	1	–	AX, CY ← AX + (saddrp)	×	×	×
		AX, !addr16	3	1	4	AX, CY ← AX + (addr16)	×	×	×
		AX, [HL+byte]	3	1	4	AX, CY ← AX + (HL + byte)	×	×	×
		AX, ES:!addr16	4	2	5	AX, CY ← AX + (ES:addr16)	×	×	×
		AX, ES: [HL+byte]	4	2	5	AX, CY ← AX + ((ES:HL) + byte)	×	×	×
	SUBW	AX, #word	3	1	–	AX, CY ← AX – word	×	×	×
		AX, BC	1	1	–	AX, CY ← AX – BC	×	×	×
		AX, DE	1	1	–	AX, CY ← AX – DE	×	×	×
		AX, HL	1	1	–	AX, CY ← AX – HL	×	×	×
		AX, saddrp	2	1	–	AX, CY ← AX – (saddrp)	×	×	×
		AX, !addr16	3	1	4	AX, CY ← AX – (addr16)	×	×	×
		AX, [HL+byte]	3	1	4	AX, CY ← AX – (HL + byte)	×	×	×
		AX, ES:!addr16	4	2	5	AX, CY ← AX – (ES:addr16)	×	×	×
		AX, ES: [HL+byte]	4	2	5	AX, CY ← AX – ((ES:HL) + byte)	×	×	×
	CMPW	AX, #word	3	1	–	AX – word	×	×	×
		AX, BC	1	1	–	AX – BC	×	×	×
		AX, DE	1	1	–	AX – DE	×	×	×
		AX, HL	1	1	–	AX – HL	×	×	×
		AX, saddrp	2	1	–	AX – (saddrp)	×	×	×
		AX, !addr16	3	1	4	AX – (addr16)	×	×	×
		AX, [HL+byte]	3	1	4	AX – (HL + byte)	×	×	×
		AX, ES:!addr16	4	2	5	AX – (ES:addr16)	×	×	×
		AX, ES: [HL+byte]	4	2	5	AX – ((ES:HL) + byte)	×	×	×
Multiply	MULU	X	1	1	–	AX ← A × X			

Notes 1. When the internal RAM area, SFR area, or extended SFR area is accessed, or for an instruction with no data access.

2. When the program memory area is accessed.

Remarks 1. One instruction clock cycle is one cycle of the CPU clock (f_{CPU}) selected by the system clock control register (CKC).

2. This number of clocks is for when the program is in the internal ROM (flash memory) area. When fetching an instruction from the internal RAM area, the number of clocks is twice the number of clocks plus 3, maximum.

Table 27-5. Operation List (12/17)

Instruction Group	Mnemonic	Operands	Bytes	Clocks		Operation	Flag		
				Note 1	Note 2		Z	AC	CY
Increment/ decrement	INC	r	1	1	–	r ← r + 1	×	×	
		saddr	2	2	–	(saddr) ← (saddr) + 1	×	×	
		!addr16	3	2	–	(addr16) ← (addr16) + 1	×	×	
		[HL+byte]	3	2	–	(HL+byte) ← (HL+byte) + 1	×	×	
		ES:!addr16	4	3	–	(ES, addr16) ← (ES, addr16) + 1	×	×	
		ES: [HL+byte]	4	3	–	((ES:HL) + byte) ← ((ES:HL) + byte) + 1	×	×	
	DEC	r	1	1	–	r ← r – 1	×	×	
		saddr	2	2	–	(saddr) ← (saddr) – 1	×	×	
		!addr16	3	2	–	(addr16) ← (addr16) – 1	×	×	
		[HL+byte]	3	2	–	(HL+byte) ← (HL+byte) – 1	×	×	
		ES:!addr16	4	3	–	(ES, addr16) ← (ES, addr16) – 1	×	×	
		ES: [HL+byte]	4	3	–	((ES:HL) + byte) ← ((ES:HL) + byte) – 1	×	×	
	INCW	rp	1	1	–	rp ← rp + 1			
		saddrp	2	2	–	(saddrp) ← (saddrp) + 1			
		!addr16	3	2	–	(addr16) ← (addr16) + 1			
		[HL+byte]	3	2	–	(HL+byte) ← (HL+byte) + 1			
		ES:!addr16	4	3	–	(ES, addr16) ← (ES, addr16) + 1			
		ES: [HL+byte]	4	3	–	((ES:HL) + byte) ← ((ES:HL) + byte) + 1			
	DECW	rp	1	1	–	rp ← rp – 1			
		saddrp	2	2	–	(saddrp) ← (saddrp) – 1			
		!addr16	3	2	–	(addr16) ← (addr16) – 1			
		[HL+byte]	3	2	–	(HL+byte) ← (HL+byte) – 1			
		ES:!addr16	4	3	–	(ES, addr16) ← (ES, addr16) – 1			
		ES: [HL+byte]	4	3	–	((ES:HL) + byte) ← ((ES:HL) + byte) – 1			
Shift	SHR	A, cnt	2	1	–	(CY ← A_0, A_{m-1} ← A_m, A_7 ← 0) × cnt			×
	SHRW	AX, cnt	2	1	–	(CY ← AX_0, AX_{m-1} ← AX_m, AX_{15} ← 0) × cnt			×
	SHL	A, cnt	2	1	–	(CY ← A_7, A_m ← A_{m-1}, A_0 ← 0) × cnt			×
		B, cnt	2	1	–	(CY ← B_7, B_m ← B_{m-1}, B_0 ← 0) × cnt			×
		C, cnt	2	1	–	(CY ← C_7, C_m ← C_{m-1}, C_0 ← 0) × cnt			×
	SHLW	AX, cnt	2	1	–	(CY ← AX_{15}, AX_m ← AX_{m-1}, AX_0 ← 0) × cnt			×
		BC, cnt	2	1	–	(CY ← BC_{15}, BC_m ← BC_{m-1}, BC_0 ← 0) × cnt			×
	SAR	A, cnt	2	1	–	(CY ← A_0, A_{m-1} ← A_m, A_7 ← A_7) × cnt			×
	SARW	AX, cnt	2	1	–	(CY ← AX_0, AX_{m-1} ← AX_m, AX_{15} ← AX_{15}) × cnt			×

Notes 1. When the internal RAM area, SFR area, or extended SFR area is accessed, or for an instruction with no data access.

2. When the program memory area is accessed.

Remarks 1. One instruction clock cycle is one cycle of the CPU clock (f_{CPU}) selected by the system clock control register (CKC).

2. This number of clocks is for when the program is in the internal ROM (flash memory) area. When fetching an instruction from the internal RAM area, the number of clocks is twice the number of clocks plus 3, maximum.

3. cnt indicates the bit shift count.

Table 27-5. Operation List (13/17)

Instruction Group	Mnemonic	Operands	Bytes	Clocks		Operation	Flag		
				Note 1	Note 2		Z	AC	CY
Rotate	ROR	A, 1	2	1	–	(CY, $A_7 \leftarrow A_0$, $A_{m-1} \leftarrow A_m$) × 1			×
	ROL	A, 1	2	1	–	(CY, $A_0 \leftarrow A_7$, $A_{m+1} \leftarrow A_m$) × 1			×
	RORC	A, 1	2	1	–	(CY ← A_0, $A_7 \leftarrow$ CY, $A_{m-1} \leftarrow A_m$) × 1			×
	ROLC	A, 1	2	1	–	(CY ← A_7, $A_0 \leftarrow$ CY, $A_{m+1} \leftarrow A_m$) × 1			×
	ROLWC	AX,1	2	1	–	(CY ← AX_{15}, $AX_0 \leftarrow$ CY, $AX_{m+1} \leftarrow AX_m$) × 1			×
		BC,1	2	1	–	(CY ← BC_{15}, $BC_0 \leftarrow$ CY, $BC_{m+1} \leftarrow BC_m$) × 1			×
Bit manipulate	MOV1	CY, saddr.bit	3	1	–	CY ← (saddr).bit			×
		CY, sfr.bit	3	1	–	CY ← sfr.bit			×
		CY, A.bit	2	1	–	CY ← A.bit			×
		CY, PSW.bit	3	1	–	CY ← PSW.bit			×
		CY,[HL].bit	2	1	4	CY ← (HL).bit			×
		saddr.bit, CY	3	2	–	(saddr).bit ← CY			
		sfr.bit, CY	3	2	–	sfr.bit ← CY			
		A.bit, CY	2	1	–	A.bit ← CY			
		PSW.bit, CY	3	4	–	PSW.bit ← CY	×	×	
		[HL].bit, CY	2	2	–	(HL).bit ← CY			
		CY, ES:[HL].bit	3	2	5	CY ← (ES, HL).bit			×
		ES:[HL].bit, CY	3	3	–	(ES, HL).bit ← CY			
	AND1	CY, saddr.bit	3	1	–	CY ← CY ∧ (saddr).bit			×
		CY, sfr.bit	3	1	–	CY ← CY ∧ sfr.bit			×
		CY, A.bit	2	1	–	CY ← CY ∧ A.bit			×
		CY, PSW.bit	3	1	–	CY ← CY ∧ PSW.bit			×
		CY,[HL].bit	2	1	4	CY ← CY ∧ (HL).bit			×
		CY, ES:[HL].bit	3	2	5	CY ← CY ∧ (ES, HL).bit			×
	OR1	CY, saddr.bit	3	1	–	CY ← CY ∨ (saddr).bit			×
		CY, sfr.bit	3	1	–	CY ← CY ∨ sfr.bit			×
		CY, A.bit	2	1	–	CY ← CY ∨ A.bit			×
		CY, PSW.bit	3	1	–	CY ← CY ∨ PSW.bit			×
		CY, [HL].bit	2	1	4	CY ← CY ∨ (HL).bit			×
		CY, ES:[HL].bit	3	2	5	CY ← CY ∨ (ES, HL).bit			×

Notes 1. When the internal RAM area, SFR area, or extended SFR area is accessed, or for an instruction with no data access.

2. When the program memory area is accessed.

Remarks 1. One instruction clock cycle is one cycle of the CPU clock (f_{CPU}) selected by the system clock control register (CKC).

2. This number of clocks is for when the program is in the internal ROM (flash memory) area. When fetching an instruction from the internal RAM area, the number of clocks is twice the number of clocks plus 3, maximum.

Table 27-5. Operation List (14/17)

Instruction Group	Mnemonic	Operands	Bytes	Clocks		Operation	Flag		
				Note 1	Note 2		Z	AC	CY
Bit manipulate	XOR1	CY, saddr.bit	3	1	–	CY ← CY ⊻ (saddr).bit			×
		CY, sfr.bit	3	1	–	CY ← CY ⊻ sfr.bit			×
		CY, A.bit	2	1	–	CY ← CY ⊻ A.bit			×
		CY, PSW.bit	3	1	–	CY ← CY ⊻ PSW.bit			×
		CY, [HL].bit	2	1	4	CY ← CY ⊻ (HL).bit			×
		CY, ES:[HL].bit	3	2	5	CY ← CY ⊻ (ES, HL).bit			×
	SET1	saddr.bit	3	2	–	(saddr).bit ← 1			
		sfr.bit	3	2	–	sfr.bit ← 1			
		A.bit	2	1	–	A.bit ← 1			
		!addr16.bit	4	2	–	(addr16).bit ← 1			
		PSW.bit	3	4	–	PSW.bit ← 1	×	×	×
		[HL].bit	2	2	–	(HL).bit ← 1			
		ES:!addr16.bit	5	3	–	(ES, addr16).bit ← 1			
		ES:[HL].bit	3	3	–	(ES, HL).bit ← 1			
	CLR1	saddr.bit	3	2	–	(saddr.bit) ← 0			
		sfr.bit	3	2	–	sfr.bit ← 0			
		A.bit	2	1	–	A.bit ← 0			
		!addr16.bit	4	2	–	(addr16).bit ← 0			
		PSW.bit	3	4	–	PSW.bit ← 0	×	×	×
		[HL].bit	2	2	–	(HL).bit ← 0			
		ES:!addr16.bit	5	3	–	(ES, addr16).bit ← 0			
		ES:[HL].bit	3	3	–	(ES, HL).bit ← 0			
	SET1	CY	2	1	–	CY ← 1			1
	CLR1	CY	2	1	–	CY ← 0			0
	NOT1	CY	2	1	–	CY ← $\overline{CY}$			×

Notes 1. When the internal RAM area, SFR area, or extended SFR area is accessed, or for an instruction with no data access.

2. When the program memory area is accessed.

Remarks 1. One instruction clock cycle is one cycle of the CPU clock (f_{CPU}) selected by the system clock control register (CKC).

2. This number of clocks is for when the program is in the internal ROM (flash memory) area. When fetching an instruction from the internal RAM area, the number of clocks is twice the number of clocks plus 3, maximum.

Table 27-5. Operation List (15/17)

Instruction Group	Mnemonic	Operands	Bytes	Clocks		Operation	Flag		
				Note 1	**Note 2**		Z	AC	CY
Call/ return	CALL	rp	2	3	–	(SP – 2) ← (PC + 2)$_S$, (SP – 3) ← (PC + 2)$_H$, (SP – 4) ← (PC + 2)$_L$, PC ← CS, rp, SP ← SP – 4			
		$!addr20	3	3	–	(SP – 2) ← (PC + 3)$_S$, (SP – 3) ← (PC + 3)$_H$, (SP – 4) ← (PC + 3)$_L$, PC ← PC + 3 + jdisp16, SP ← SP – 4			
		!addr16	3	3	–	(SP – 2) ← (PC + 3)$_S$, (SP – 3) ← (PC + 3)$_H$, (SP – 4) ← (PC + 3)$_L$, PC ← 0000, addr16, SP ← SP – 4			
		!!addr20	4	3	–	(SP – 2) ← (PC + 4)$_S$, (SP – 3) ← (PC + 4)$_H$, (SP – 4) ← (PC + 4)$_L$, PC ← addr20, SP ← SP – 4			
	CALLT	[addr5]	2	5	–	(SP – 2) ← (PC + 2)$_S$, (SP – 3) ← (PC + 2)$_H$, (SP – 4) ← (PC + 2)$_L$, PC$_S$ ← 0000, PC$_H$ ← (0000, addr5 + 1), PC$_L$ ← (0000, addr5), SP ← SP – 4			
	BRK	–	2	5	–	(SP – 1) ← PSW, (SP – 2) ← (PC + 2)$_S$, (SP – 3) ← (PC + 2)$_H$, (SP – 4) ← (PC + 2)$_L$, PC$_S$ ← 0000, PC$_H$ ← (0007FH), PC$_L$ ← (0007EH), SP ← SP – 4, IE ← 0			
	RET	–	1	6	–	PC$_L$ ← (SP), PC$_H$ ← (SP + 1), PC$_S$ ← (SP + 2), SP ← SP + 4			
	RETI	–	2	6	–	PC$_L$ ← (SP), PC$_H$ ← (SP + 1), PC$_S$ ← (SP + 2), PSW ← (SP + 3), SP ← SP + 4	R	R	R
	RETB	–	2	6	–	PC$_L$ ← (SP), PC$_H$ ← (SP + 1), PC$_S$ ← (SP + 2), PSW ← (SP + 3), SP ← SP + 4	R	R	R

Notes 1. When the internal RAM area, SFR area, or extended SFR area is accessed, or for an instruction with no data access.

2. When the program memory area is accessed.

Remarks 1. One instruction clock cycle is one cycle of the CPU clock (f_{CPU}) selected by the system clock control register (CKC).

2. This number of clocks is for when the program is in the internal ROM (flash memory) area. When fetching an instruction from the internal RAM area, the number of clocks is twice the number of clocks plus 3, maximum.

Table 27-5. Operation List (16/17)

Instruction Group	Mnemonic	Operands	Bytes	Clocks		Operation	Flag		
				Note 1	Note 2		Z	AC	CY
Stack manipulate	PUSH	PSW	2	1	–	(SP – 1) ← PSW, (SP – 2) ← 00H, SP ← SP – 2			
		rp	1	1	–	(SP – 1) ← rp_H, (SP – 2)← rp_L, SP ← SP – 2			
	POP	PSW	2	3	–	PSW ← (SP + 1), SP ← SP + 2	R	R	R
		rp	1	1	–	rp_L ← (SP), rp_H ← (SP + 1), SP ← SP + 2			
	MOVW	SP, #word	4	1	–	SP ← word			
		SP, AX	2	1	–	SP ← AX			
		AX, SP	2	1	–	AX ← SP			
		HL, SP	3	1	–	HL ← SP			
		BC, SP	3	1	–	BC ← SP			
		DE, SP	3	1	–	DE ← SP			
	ADDW	SP, #byte	2	1	–	SP ← SP + byte			
	SUBW	SP, #byte	2	1	–	SP ← SP – byte			
Unconditional branch	BR	AX	2	3	–	PC ← CS, AX			
		$addr20	2	3	–	PC ← PC + 2 + jdisp8			
		$!addr20	3	3	–	PC ← PC + 3 + jdisp16			
		!addr16	3	3	–	PC ← 0000, addr16			
		!!addr20	4	3	–	PC ← addr20			
Conditional branch	BC	$addr20	2	2/4[Note 3]	–	PC ← PC + 2 + jdisp8 if CY = 1			
	BNC	$addr20	2	2/4[Note 3]	–	PC ← PC + 2 + jdisp8 if CY = 0			
	BZ	$addr20	2	2/4[Note 3]	–	PC ← PC + 2 + jdisp8 if Z = 1			
	BNZ	$addr20	2	2/4[Note 3]	–	PC ← PC + 2 + jdisp8 if Z = 0			
	BH	$addr20	3	2/4[Note 3]	–	PC ← PC+3+jdisp8 if (Z ∨ CY)=0			
	BNH	$addr20	3	2/4[Note 3]	–	PC ← PC+3+jdisp8 if (Z ∨ CY)=1			
	BT	saddr.bit, $addr20	4	3/5[Note 3]	–	PC ← PC + 4 + jdisp8 if (saddr).bit = 1			
		sfr.bit, $addr20	4	3/5[Note 3]	–	PC ← PC + 4 + jdisp8 if sfr.bit = 1			
		A.bit, $addr20	3	3/5[Note 3]	–	PC ← PC + 3 + jdisp8 if A.bit = 1			
		PSW.bit, $addr20	4	3/5[Note 3]	–	PC ← PC + 4 + jdisp8 if PSW.bit = 1			
		[HL].bit, $addr20	3	3/5[Note 3]	6/7	PC ← PC + 3 + jdisp8 if (HL).bit = 1			
		ES:[HL].bit, $addr20	4	4/6[Note 3]	7/8	PC ← PC + 4 + jdisp8 if (ES, HL).bit = 1			

Notes 1. When the internal RAM area, SFR area, or extended SFR area is accessed, or for an instruction with no data access.

2. When the program memory area is accessed.

3. This indicates the number of clocks "when condition is not met/when condition is met".

Remarks 1. One instruction clock cycle is one cycle of the CPU clock (f_{CPU}) selected by the system clock control register (CKC).

2. This number of clocks is for when the program is in the internal ROM (flash memory) area. When fetching an instruction from the internal RAM area, the number of clocks is twice the number of clocks plus 3, maximum.

Table 27-5. Operation List (17/17)

Instruction Group	Mnemonic	Operands	Bytes	Clocks		Operation	Flag
				Note 1	Note 2		Z AC CY
Conditional branch	BF	saddr.bit, $addr20	4	3/5[Note 3]	–	PC ← PC + 4 + jdisp8 if (saddr).bit = 0	
		sfr.bit, $addr20	4	3/5[Note 3]	–	PC ← PC + 4 + jdisp8 if sfr.bit = 0	
		A.bit, $addr20	3	3/5[Note 3]	–	PC ← PC + 3 + jdisp8 if A.bit = 0	
		PSW.bit, $addr20	4	3/5[Note 3]	–	PC ← PC + 4 + jdisp8 if PSW.bit = 0	
		[HL].bit, $addr20	3	3/5[Note 3]	6/7	PC ← PC + 3 + jdisp8 if (HL).bit = 0	
		ES:[HL].bit, $addr20	4	4/6[Note 3]	7/8	PC ← PC + 4 + jdisp8 if (ES, HL).bit = 0	
	BTCLR	saddr.bit, $addr20	4	3/5[Note 3]	–	PC ← PC + 4 + jdisp8 if (saddr).bit = 1 then reset (saddr).bit	
		sfr.bit, $addr20	4	3/5[Note 3]	–	PC ← PC + 4 + jdisp8 if sfr.bit = 1 then reset sfr.bit	
		A.bit, $addr20	3	3/5[Note 3]	–	PC ← PC + 3 + jdisp8 if A.bit = 1 then reset A.bit	
		PSW.bit, $addr20	4	3/5[Note 3]	–	PC ← PC + 4 + jdisp8 if PSW.bit = 1 then reset PSW.bit	× × ×
		[HL].bit, $addr20	3	3/5[Note 3]	–	PC ← PC + 3 + jdisp8 if (HL).bit = 1 then reset (HL).bit	
		ES:[HL].bit, $addr20	4	4/6[Note 3]	–	PC ← PC + 4 + jdisp8 if (ES, HL).bit = 1 then reset (ES, HL).bit	
Conditional skip	SKC	–	2	1	–	Next instruction skip if CY = 1	
	SKNC	–	2	1	–	Next instruction skip if CY = 0	
	SKZ	–	2	1	–	Next instruction skip if Z = 1	
	SKNZ	–	2	1	–	Next instruction skip if Z = 0	
	SKH	–	2	1	–	Next instruction skip if (Z ∨ CY) = 0	
	SKNH	–	2	1	–	Next instruction skip if (Z ∨ CY) = 1	
CPU control	SEL	RBn	2	1	–	RBS[1:0] ← n	
	NOP	–	1	1	–	No Operation	
	EI	–	3	4	–	IE ← 1(Enable Interrupt)	
	DI	–	3	4	–	IE ← 0(Disable Interrupt)	
	HALT	–	2	3	–	Set HALT Mode	
	STOP	–	2	3	–	Set STOP Mode	

Notes 1. When the internal RAM area, SFR area, or extended SFR area is accessed, or for an instruction with no data access.

2. When the program memory area is accessed.

3. This indicates the number of clocks "when condition is not met/when condition is met".

Remarks 1. One instruction clock cycle is one cycle of the CPU clock (f_{CPU}) selected by the system clock control register (CKC).

2. This number of clocks is for when the program is in the internal ROM (flash memory) area. When fetching an instruction from the internal RAM area, the number of clocks is twice the number of clocks plus 3, maximum.

3. n indicates the number of register banks (n = 0 to 3)

CHAPTER 28 ELECTRICAL SPECIFICATIONS

Cautions 1. The 78K0R/Ix3 has an on-chip debug function, which is provided for development and evaluation. Do not use the on-chip debug function in products designated for mass production, because the guaranteed number of rewritable times of the flash memory may be exceeded when this function is used, and product reliability therefore cannot be guaranteed. NEC Electronics is not liable for problems occurring when the on-chip debug function is used.

2. The pins mounted are as follows according to product.

(1) Port functions

Port	78K0R/IB3	78K0R/IC3			78K0R/ID3	78K0R/IE3
		38-pin	44-pin	48-pin		
Port 0	–				P00, P01	
Port 1	P10 to P13					P10 to P17
Port 2	P20 to P25	P20 to P27				
Port 3	P30 to P32					P30 to P33
Port 4	P40, P41					P40 to P43
Port 5	P50, P51	P50 to P52				P50 to P53
Port 6	–			P60, P61		
Port 7	–	P72, P73	P70 to P75		P70 to P77	
Port 8	P80, P81, P83	P80 to P83				
Port 12	P120 to P122	P120 to P124				
Port 14	–			P140		P140, P141
Port 15	–		P150, P151	P150 to P152		P150-P153

(2) Non-port functions (1/2)

Function Name	78K0R/IB3	78K0R/IC3			78K0R/ID3	78K0R/IE3
		38-pin	44-pin	48-pin		
Power supply, ground	V_{DD}, AV_{REF}, V_{SS}, AV_{SS}					V_{DD}, EV_{DD}, AV_{REF}, V_{SS}, EV_{SS}, AV_{SS}
Regulator	REGC					
Reset	$\overline{\text{RESET}}$					
Clock oscillation	X1, X2, EXCLK	X1, X2, XT1, XT2, EXCLK				
Writing to flash memory	FLMD0					
Interrupt	INTP0 to INTP5	INTP0 to INTP7				
Timer	TI02 to TI07, TI09, TO02 to TO07, TO11	SLTI, SLTO, TI02 to TI07, TI09, TO02 to TO07, TO10, TO11	SLTI, SLTO, TI02 to TI07, TI09 to TI11, TO02 to TO07, TO10, TO11		SLTI, SLTO, TI00, TI02 to TI07, TI09 to TI11, TO00, TO02 to TO07, TO10, TO11	SLTI, SLTO, TI00, TI02 to TI11, TO00, TO02 to TO11

(2) Non-port functions (2/2)

Function Name		78K0R/IB3	78K0R/IC3			78K0R/ID3	78K0R/IE3
			38-pin	44-pin	48-pin		
Real time counter		–	RTCDIV, RTCCL, RTC1HZ				
Comparator		CMP0M, CMP0P, CMP1P	CMP0M, CMP0P, CMP1M, CMP1P				
Programmable gain amplifier		PGAI					
Serial interface	UART0	RxD0, TxD0					
	UART1	RxD1, TxD1					
	CSI00	–		SCK00, SI00, SO00			
	CSI01	–		SCK01, SI01, SO01			
	CSI10	SCK10, SI10, SO10					
	IIC10	SCL10, SDA10					
	IICA	–			SCL0, SDA0		
A/D converter		ANI0 to ANI5	ANI0 to ANI7	ANI0 to ANI9	ANI0 to ANI10	ANI0 to ANI10	ANI0 to ANI11
Clock Output/Buzzer Output		–			PCLBUZ0		PCLBUZ0, PCLBUZ1
Low-voltage detector (LVI)		EXLVI					
On-chip debug function		TOOL0, TOOL1					

Caution The pins mounted depend on the product. Refer to Caution 2 at the beginning of this chapter.

Absolute Maximum Ratings (T_A = 25°C) (1/2)

Parameter	Symbols	Conditions	Ratings	Unit
Supply voltage	V_{DD}		−0.5 to +6.5	V
	EV_{DD}		−0.5 to +6.5	V
	V_{SS}		−0.5 to +0.3	V
	EV_{SS}		−0.5 to +0.3	V
	AV_{REF}		−0.5 to V_{DD} +0.3 Note 1	V
	AV_{SS}		−0.5 to +0.3	V
REGC pin input voltage	V_{IREGC}	REGC	−0.3 to +3.6 and −0.3 to V_{DD} +0.3 Note 2	V
Input voltage	V_{I1}	P00, P01, P10 to P17, P30 to P33, P40 to P43, P50 to P53, P70 to P77, P120 to P124, P141, EXCLK, $\overline{\text{RESET}}$, FLMD0	−0.3 to EV_{DD} +0.3 Note 1 and −0.3 to V_{DD} +0.3 Note 1	V
	V_{I2}	P60, P61 (N-ch open-drain)	−0.3 to +6.5	V
	V_{I3}	P20 to P27, P80 to P83, P150 to P153	−0.3 to AV_{REF} +0.3 Note 1 and −0.3 to V_{DD} +0.3 Note 1	V
Output voltage	V_{O1}	P00, P01, P10 to P17, P30 to P33, P40 to P43, P50 to P53, P60, P61, P70 to P77, P120, P140, P141	−0.3 to EV_{DD} +0.3 Note 1	V
	V_{O2}	P20 to P27, P80 to P83, P150 to P153	−0.3 to AV_{REF} +0.3	V

Notes 1. Must be 6.5 V or lower.

2. Connect the REGC pin to Vss via a capacitor (0.47 to 1 μF). This value regulates the absolute maximum rating of the REGC pin. Do not use this pin with voltage applied to it.

Caution Product quality may suffer if the absolute maximum rating is exceeded even momentarily for any parameter. That is, the absolute maximum ratings are rated values at which the product is on the verge of suffering physical damage, and therefore the product must be used under conditions that ensure that the absolute maximum ratings are not exceeded.

Remark Unless specified otherwise, the characteristics of alternate-function pins are the same as those of port pins.

Caution The pins mounted depend on the product. Refer to Caution 2 at the beginning of this chapter.

Absolute Maximum Ratings (T_A = 25°C) (2/2)

Parameter	Symbols	Conditions		Ratings	Unit
Analog input voltage	V_{AN}	ANI0 to ANI11, PGAI, CMP0M, CMP0P, CMP1M, CMP1P		−0.3 to AV_{REF} +0.3[Note] and −0.3 to V_{DD} +0.3[Note]	V
Output current, high	I_{OH1}	Per pin	P00, P01, P10 to P17, P30 to P33, P40 to P43, P50 to P53, P70 to P77, P120, P140, P141	−10	mA
		Total of all pins −80 mA	P00, P01, P40 to P43 to P120, P140, P141	−25	mA
			P10 to P17, P30 to P33, P50 to P53, P70 to P77	−55	mA
	I_{OH2}	Per pin	P20 to P27, P80 to P83, P150 to P153	−0.5	mA
		Total of all pins		−2	mA
Output current, low	I_{OL1}	Per pin	P00, P01, P10 to P17, P30 to P33, P40 to P43, P50 to P53, P60, P61, P70 to P77, P120, P140, P141	30	mA
		Total of all pins 200 mA	P00, P01, P40 to P43, P120, P140, P141	60	mA
			P10-P17, P30 to P33, P50 to P53, P60, P61, P70 to P77	140	mA
	I_{OL2}	Per pin	P20 to P27, P80 to P83, P150 to P153	1	mA
		Total of all pins		5	mA
Operating ambient temperature	T_A	In normal operation mode		−40 to +85	°C
		In flash memory programming mode			
Storage temperature	T_{stg}			−65 to +150	°C

Note Must be 6.5 V or lower.

Caution Product quality may suffer if the absolute maximum rating is exceeded even momentarily for any parameter. That is, the absolute maximum ratings are rated values at which the product is on the verge of suffering physical damage, and therefore the product must be used under conditions that ensure that the absolute maximum ratings are not exceeded.

Remark Unless specified otherwise, the characteristics of alternate-function pins are the same as those of port pins.

Caution The pins mounted depend on the product. Refer to Caution 2 at the beginning of this chapter.

X1 Oscillator Characteristics

(T_A = –40 to +85°C, 2.7 V ≤ V_{DD} = EV_{DD} ≤ 5.5 V, V_{SS} = EV_{SS} = AV_{SS} = 0 V)

Resonator	Recommended Circuit	Parameter	Conditions	MIN.	TYP.	MAX.	Unit
Ceramic resonator	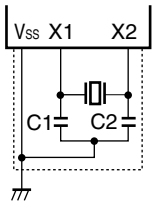	X1 clock oscillation frequency (f_X)Note	2.7 V ≤ V_{DD} ≤ 5.5 V	2.0		20.0	MHz
Crystal resonator	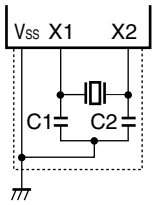	X1 clock oscillation frequency (f_X)Note	2.7 V ≤ V_{DD} ≤ 5.5 V	2.0		20.0	MHz

Note Indicates only oscillator characteristics. Refer to AC Characteristics for instruction execution time.

Cautions 1. When using the X1 oscillator, wire as follows in the area enclosed by the broken lines in the above figures to avoid an adverse effect from wiring capacitance.

- **Keep the wiring length as short as possible.**
- **Do not cross the wiring with the other signal lines.**
- **Do not route the wiring near a signal line through which a high fluctuating current flows.**
- **Always make the ground point of the oscillator capacitor the same potential as V_{SS}.**
- **Do not ground the capacitor to a ground pattern through which a high current flows.**
- **Do not fetch signals from the oscillator.**

2. Since the CPU is started by the internal high-speed oscillation clock after a reset release, check the X1 clock oscillation stabilization time using the oscillation stabilization time counter status register (OSTC) by the user. Determine the oscillation stabilization time of the OSTC register and oscillation stabilization time select register (OSTS) after sufficiently evaluating the oscillation stabilization time with the resonator to be used.

Remark For the resonator selection and oscillator constant, customers are requested to either evaluate the oscillation themselves or apply to the resonator manufacturer for evaluation.

Caution The pins mounted depend on the product. Refer to Caution 2 at the beginning of this chapter.

Internal Oscillator Characteristics

(T_A = –40 to +85°C, 2.7 V ≤ V_{DD} = EV_{DD} ≤ 5.5 V, V_{SS} = EV_{SS} = AV_{SS} = 0 V)

Oscillators	Parameters	Conditions		MIN.	TYP.	MAX.	Unit
Internal high-speed oscillation clock frequency Note 1	f_{IH}			7.856	8	8.144	MHz
	f_{IH40}			38.38	40	41.16	MHz
Internal low-speed oscillation clock frequency	f_{IL}	Normal current mode	2.7 V ≤ V_{DD} ≤ 5.5 V	27	30	33	kHz
		Low consumption current mode Note 2		25.5	30	34.5	kHz

Notes 1. This only indicates the oscillator characteristics. Refer to AC Characteristics for instruction execution time.

2. Regulator output is set to low consumption current mode in the following cases:

- When the RMC register is set to 5AH.
- During $\overline{\text{RESET}}$ pin reset.
- In STOP mode (except during OCD mode).
- When both the high-speed system clock (f_{MX}), the high-speed internal oscillation clock (f_{IH}), and the 40 MHz internal high-speed oscillation clock (f_{IH40}) are stopped during CPU operation with the subsystem clock (f_{XT})
- When both the high-speed system clock (f_{MX}), the high-speed internal oscillation clock (f_{IH}), and the 40 MHz internal high-speed oscillation clock (f_{IH40}) are stopped during the HALT mode when the CPU operation with the subsystem clock (f_{XT}) has been set.

Remark For details on the normal current mode and low consumption current mode according to the regulator output voltage, refer to **CHAPTER 22 REGULATOR**.

Caution The pins mounted depend on the product. Refer to Caution 2 at the beginning of this chapter.

XT1 Oscillator Characteristics [Note 1]

(T_A = –40 to +85°C, 2.7 V ≤ V_{DD} = EV_{DD} ≤ 5.5 V, V_{SS} = EV_{SS} = AV_{SS} = 0 V)

Resonator	Recommended Circuit	Items	Conditions	MIN.	TYP.	MAX.	Unit
Crystal resonator	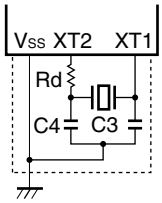	XT1 clock oscillation frequency (f_{XT}) [Note 2]		32	32.768	35	kHz

Notes 1. The 78K0R/IB3 doesn't have the XT1 oscillator.

2. Indicates only oscillator characteristics. Refer to AC Characteristics for instruction execution time.

Cautions 1. When using the XT1 oscillator, wire as follows in the area enclosed by the broken lines in the above figures to avoid an adverse effect from wiring capacitance.

- **Keep the wiring length as short as possible.**
- **Do not cross the wiring with the other signal lines.**
- **Do not route the wiring near a signal line through which a high fluctuating current flows.**
- **Always make the ground point of the oscillator capacitor the same potential as V_{SS}.**
- **Do not ground the capacitor to a ground pattern through which a high current flows.**
- **Do not fetch signals from the oscillator.**

2. The XT1 oscillator is designed as a low-amplitude circuit for reducing power consumption, and is more prone to malfunction due to noise than the X1 oscillator. Particular care is therefore required with the wiring method when the XT1 clock is used.

Remark For the resonator selection and oscillator constant, customers are requested to either evaluate the oscillation themselves or apply to the resonator manufacturer for evaluation.

Caution The pins mounted depend on the product. Refer to Caution 2 at the beginning of this chapter.

DC Characteristics (1/11)

(T_A = –40 to +85°C, 2.7 V ≤ V_{DD} = EV_{DD} ≤ 5.5 V, 2.7 V ≤ AV_{REF} ≤ V_{DD}, V_{SS} = EV_{SS} = AV_{SS} = 0 V)

Items	Symbol	Conditions		MIN.	TYP.	MAX.	Unit
Output current, high[Note 1]	I_{OH1}	Per pin for P00, P01, P10 to P17, P30 to P33, P40 to P43, P50 to P53, P70 to P77, P120, P140, P141	4.0 V ≤ V_{DD} ≤ 5.5 V			–3.0	mA
			2.7 V ≤ V_{DD} < 4.0 V			–1.0	mA
		Total of P00, P01, P40 to P43, P120, P140, P141 (When duty = 70%[Note 2])	4.0 V ≤ V_{DD} ≤ 5.5 V			–20.0	mA
			2.7 V ≤ V_{DD} < 4.0 V			–10.0	mA
		Total of P10 to P17, P30 to P33, P50 to P53, P70-P77 (When duty = 70%[Note 2])	4.0 V ≤ V_{DD} ≤ 5.5 V			–30.0	mA
			2.7 V ≤ V_{DD} < 4.0 V			–19.0	mA
		Total of all pins (When duty = 60%[Note 2])	4.0 V ≤ V_{DD} ≤ 5.5 V			–50.0	mA
			2.7 V ≤ V_{DD} < 4.0 V			–29.0	mA
	I_{OH2}	Per pin for P20 to P27, P80 to P83, P150 to P153	AV_{REF} = V_{DD}			–0.1	mA

Notes 1. Value of current at which the device operation is guaranteed even if the current flows from V_{DD} (78K0R/IE3: EV_{DD}) pin to an output pin.

2. Specification under conditions where the duty factor is 60% or 70%.

The output current value that has changed the duty ratio can be calculated with the following expression (when changing the duty factor from 70% to n%).

- Total output current of pins = (I_{OH} × 0.7)/(n × 0.01)

<Example> Where n = 50% and I_{OH} = –20.0 mA

Total output current of pins = (–20.0 × 0.7)/(50 × 0.01) = –28.0 mA

However, the current that is allowed to flow into one pin does not vary depending on the duty factor. A current higher than the absolute maximum rating must not flow into one pin.

Caution P30 to P32, P70, P72, P73, and P75 do not output high level in N-ch open-drain mode.

Remark Unless specified otherwise, the characteristics of alternate-function pins are the same as those of port pins.

Caution The pins mounted depend on the product. Refer to Caution 2 at the beginning of this chapter.

DC Characteristics (2/11)

(T_A = –40 to +85°C, 2.7 V ≤ V_{DD} = EV_{DD} ≤ 5.5 V, 2.7 V ≤ AV_{REF} ≤ V_{DD}, V_{SS} = EV_{SS} = AV_{SS} = 0 V)

Items	Symbol	Conditions		MIN.	TYP.	MAX.	Unit
Output current, low[Note 1]	I_{OL1}	Per pin for P00, P01, P16, P17, P30, P33, P40 to P43, P52, P53, P70 to P77, P120, P140, P141	4.0 V ≤ V_{DD} ≤ 5.5 V			8.5	mA
			2.7 V ≤ V_{DD} < 4.0 V			1.0	mA
		P31, P32	4.0 V ≤ V_{DD} ≤ 5.5 V			8.5	mA
			2.7 V ≤ V_{DD} < 4.0 V			1.5	mA
		Per pin for P10 to P15, P50, P51	4.0 V ≤ V_{DD} ≤ 5.5 V			8.5	mA
			2.7 V ≤ V_{DD} < 4.0 V			1.0	mA
		Per pin for P60, P61	4.0 V ≤ V_{DD} ≤ 5.5 V			15.0	mA
			2.7 V ≤ V_{DD} < 4.0 V			3.0	mA
		Total of P00, P01, P40 to P43, P120, P140, P141 (When duty = 70%[Note 2])	4.0 V ≤ V_{DD} ≤ 5.5 V			20.0	mA
			2.7 V ≤ V_{DD} < 4.0 V			15.0	mA
		Total of P10 to P17, P30 to P33, P50 to P53, P60, P61, P70 to P77 (When duty = 70%[Note 2])	4.0 V ≤ V_{DD} ≤ 5.5 V			45.0	mA
			2.7 V ≤ V_{DD} < 4.0 V			35.0	mA
		Total of all pins (When duty = 70%[Note 2])	4.0 V ≤ V_{DD} ≤ 5.5 V			65.0	mA
			2.7 V ≤ V_{DD} < 4.0 V			40.0	mA
	I_{OL2}	Per pin for P20 to P27, P80 to P83, P150 to P153	AV_{REF} = V_{DD}			0.4	mA

Notes 1. Value of current at which the device operation is guaranteed even if the current flows from an output pin to EV_{SS}, V_{SS}, and AV_{SS} pin.

2. Specification under conditions where the duty factor is 60% or 70%.

The output current value that has changed the duty ratio can be calculated with the following expression (when changing the duty factor from 70% to n%).

- Total output current of pins = (I_{OL} × 0.7)/(n × 0.01)

<Example> Where n = 50% and I_{OL} = 20.0 mA

Total output current of pins = (20.0 × 0.7)/(50 × 0.01) = 28.0 mA

However, the current that is allowed to flow into one pin does not vary depending on the duty factor. A current higher than the absolute maximum rating must not flow into one pin.

Remark Unless specified otherwise, the characteristics of alternate-function pins are the same as those of port pins.

Caution The pins mounted depend on the product. Refer to Caution 2 at the beginning of this chapter.

DC Characteristics (3/11)

(T_A = –40 to +85°C, 2.7 V ≤ V_{DD} = EV_{DD} ≤ 5.5 V, 2.7 V ≤ AV_{REF} ≤ V_{DD}, V_{SS} = EV_{SS} = AV_{SS} = 0 V)

Items	Symbol	Conditions		MIN.	TYP.	MAX.	Unit
Input voltage, high	V_{IH1}	P01, P30, P33, P42, P43, P53, P123, P124, P141		0.7V_{DD}		V_{DD}	V
	V_{IH2}	P00, P10 to P17, P31, P32, P40, P41, P50 to P52, P70 to P77, P120 to P122, EXCLK, $\overline{\text{RESET}}$	Normal input buffer	0.8V_{DD}		V_{DD}	V
	V_{IH3}	P31, P32, P71, P72, P74, P75	TTL input buffer 4.0 V ≤ V_{DD} ≤ 5.5 V	2.2		V_{DD}	V
			TTL input buffer 2.7 V ≤ V_{DD} < 4.0 V	2.0		V_{DD}	V
	V_{IH4}	P20 to P27, P81, P83, P150 to P153	AV_{REF} = V_{DD}	0.7AV_{REF}		AV_{REF}	V
	V_{IH5}	P80, P82	AV_{REF} = V_{DD}	0.8AV_{REF}		AV_{REF}	V
	V_{IH6}	P60, P61		0.7V_{DD}		6.0	V
	V_{IH7}	FLMD0		0.9V_{DD} Note		V_{DD}	V

Note Must be 0.9V_{DD} or higher when used in the flash memory programming mode.

Caution The maximum value of V_{IH} of pins P30 to P32, P70, P72, P73, and P75 is V_{DD}, even in the N-ch open-drain mode.

Remark Unless specified otherwise, the characteristics of alternate-function pins are the same as those of port pins.

Caution The pins mounted depend on the product. Refer to Caution 2 at the beginning of this chapter.

DC Characteristics (4/11)

(T_A = –40 to +85°C, 2.7 V ≤ V_{DD} = EV_{DD} ≤ 5.5 V, 2.7 V ≤ AV_{REF} ≤ V_{DD}, V_{SS} = EV_{SS} = AV_{SS} = 0 V)

Items	Symbol	Conditions		MIN.	TYP.	MAX.	Unit
Input voltage, low	V_{IL1}	P01, P30, P33, P42, P43, P53, P123, P124, P141		0		0.3V_{DD}	V
	V_{IL2}	P00, P10 to P17, P31, P32, P40, P41, P50 to P52, P70 to P77, P120 to P122, EXCLK, $\overline{\text{RESET}}$	Normal input buffer	0		0.2V_{DD}	V
	V_{IL3}	P31, P32, P71, P72, P74, P75	TTL input buffer 4.0 V ≤ V_{DD} ≤ 5.5 V	0		0.8	V
			TTL input buffer 2.7 V ≤ V_{DD} < 4.0 V	0		0.5	V
	V_{IL4}	P20 to P27, P81, P83, P150 to P153	AV_{REF} = V_{DD}	0		0.3AV_{REF}	V
	V_{IL5}	P80, P82	AV_{REF} = V_{DD}	0		0.2AV_{REF}	V
	V_{IL6}	P60, P61		0		0.3V_{DD}	V
	V_{IL7}	FLMD0 Note		0		0.1V_{DD}	V

Note When disabling writing of the flash memory, connect the FLMD0 pin processing directly to V_{SS}, and maintain a voltage less than 0.1V_{DD}.

Remark Unless specified otherwise, the characteristics of alternate-function pins are the same as those of port pins.

Caution The pins mounted depend on the product. Refer to Caution 2 at the beginning of this chapter.

DC Characteristics (5/11)

(T_A = –40 to +85°C, 2.7 V ≤ V_{DD} = EV_{DD} ≤ 5.5 V, 2.7 V ≤ AV_{REF} ≤ V_{DD}, V_{SS} = EV_{SS} = AV_{SS} = 0 V)

Items	Symbol	Conditions		MIN.	TYP.	MAX.	Unit
Output voltage, high	V_{OH1}	P00, P01, P10 to P17, P30 to P33, P40 to P43, P50 to P53, P70 to P77, P120, P140, P141	4.0 V ≤ V_{DD} ≤ 5.5 V, I_{OH1} = – 3.0 mA	V_{DD} – 0.7			V
			2.7 V ≤ V_{DD} ≤ 5.5 V, I_{OH1} = –1.0 mA	V_{DD} – 0.5			V
	V_{OH2}	P20 to P27, P80 to P83, P150 to P153	AV_{REF} = V_{DD}, I_{OH2} = –0.1 mA	AV_{REF} – 0.5			V
Output voltage, low	V_{OL1}	P00, P01, P16, P17, P30, P33, P40 to P43, P52, P53, P70 to P77, P120, P140, P141	4.0 V ≤ V_{DD} ≤ 5.5 V, I_{OL1} = 8.5 mA			0.7	V
			2.7 V ≤ V_{DD} ≤ 5.5 V, I_{OL1} = 1.0 mA			0.5	V
		P31, P32	4.0 V ≤ V_{DD} ≤ 5.5 V, I_{OL1} = 8.5 mA			0.7	V
			2.7 V ≤ V_{DD} ≤ 5.5 V, I_{OL1} = 1.5 mA			0.5	V
		P10 to P15, P50, P51	4.0 V ≤ V_{DD} ≤ 5.5 V, I_{OL1} = 8.5 mA			0.7	V
			2.7 V ≤ V_{DD} ≤ 5.5 V, I_{OL1} = 1.0 mA			0.5	V
	V_{OL2}	P20 to P27, P80 to P83, P150 to P153	AV_{REF} = V_{DD}, I_{OL2} = 0.4 mA			0.4	V
	V_{OL3}	P60, P61	4.0 V ≤ V_{DD} ≤ 5.5 V, I_{OL1} = 15.0 mA			2.0	V
			4.0 V ≤ V_{DD} ≤ 5.5 V, I_{OL1} = 5.0 mA			0.4	V
			2.7 V ≤ V_{DD} ≤ 5.5 V, I_{OL1} = 3.0 mA			0.4	V

Caution P30 to P32, P70, P72, P73, and P75 do not output high level in N-ch open-drain mode.

Remark Unless specified otherwise, the characteristics of alternate-function pins are the same as those of port pins.

Caution The pins mounted depend on the product. Refer to Caution 2 at the beginning of this chapter.

DC Characteristics (6/11)

(T_A = –40 to +85°C, 2.7 V ≤ V_{DD} = EV_{DD} ≤ 5.5 V, 2.7 V ≤ AV_{REF} ≤ V_{DD}, V_{SS} = EV_{SS} = AV_{SS} = 0 V)

Items	Symbol	Conditions			MIN.	TYP.	MAX.	Unit
Input leakage current, high	I_{LIH1}	P00, P01, P10 to P17, P30 to P33, P40 to P43, P50 to P53, P60, P61, P70 to P77, P120, P141, FLMD0, $\overline{\text{RESET}}$	$V_I = V_{DD}$				1	μA
	I_{LIH2}	P20 to P27, P80 to P83, P150 to P153	$V_I = AV_{REF}$, $AV_{REF} = V_{DD}$				1	μA
	I_{LIH3}	P121 to P124 (X1, X2, XT1, XT2)	$V_I = V_{DD}$	In input port			1	μA
				In resonator connection			10	μA
Input leakage current, low	I_{LIL1}	P00, P01, P10-P17, P30-P33, P40-P43, P50-P53, P60, P61, P70-P77, P120, P141, FLMD0, $\overline{\text{RESET}}$	$V_I = V_{SS}$				–1	μA
	I_{LIL2}	P20 to P27, P80 to P83, P150 to P153	$V_I = V_{SS}$, $AV_{REF} = V_{DD}$				–1	μA
	I_{LIL3}	P121 to P124 (X1, X2, XT1, XT2)	$V_I = V_{SS}$	In input port			–1	μA
				In resonator connection			–10	μA

Remark Unless specified otherwise, the characteristics of alternate-function pins are the same as those of port pins.

Caution The pins mounted depend on the product. Refer to Caution 2 at the beginning of this chapter.

DC Characteristics (7/11)

(T_A = –40 to +85°C, 2.7 V ≤ V_{DD} = EV_{DD} ≤ 5.5 V, 2.7 V ≤ AV_{REF} ≤ V_{DD}, V_{SS} = EV_{SS} = AV_{SS} = 0 V)

Items	Symbol	Conditions		MIN.	TYP.	MAX.	Unit
On-chip pull-up resistance	R_U	P00, P01, P10 to P17, P30 to P33, P40 to P43, P50 to P53, P70 to P77, P120, P141	V_I = V_{SS}, In input port	10	20	100	kΩ
FLMD0 pin external pull-down resistance Note	R_{FLMD0}	When enabling the self-programming mode setting with software		100			kΩ

Note It is recommended to leave the FLMD0 pin open. If the pin is required to be pulled down externally, set R_{FLMD0} to 100 kΩ or more.

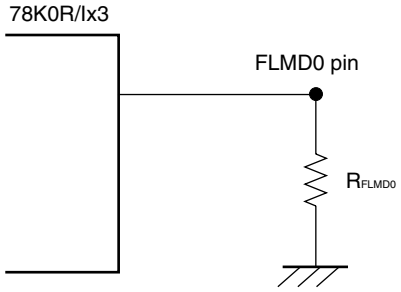

Remark Unless specified otherwise, the characteristics of alternate-function pins are the same as those of port pins.

Caution The pins mounted depend on the product. Refer to Caution 2 at the beginning of this chapter.

DC Characteristics (8/11)

(T_A = –40 to +85°C, 2.7 V ≤ V_{DD} = EV_{DD} ≤ 5.5 V, 2.7 V ≤ AV_{REF} ≤ V_{DD}, V_{SS} = EV_{SS} = AV_{SS} = 0 V)

Parameter	Symbol	Conditions			MIN.	TYP.	MAX.	Unit
Supply current	I_{DD1} Note 1	Operating mode	f_{MX} = 20 MHz Note 2, V_{DD} = 5.0 V	Square wave input		5.0	7.1	mA
				Resonator connection		5.3	7.4	
			f_{MX} = 20 MHz Note 2, V_{DD} = 3.0 V	Square wave input		5.0	7.1	mA
				Resonator connection		5.3	7.4	
			f_{MX} = 10 MHz Notes 2, 3, V_{DD} = 5.0 V	Square wave input		2.9	4.2	mA
				Resonator connection		3.0	4.3	
			f_{MX} = 10 MHz Notes 2, 3, V_{DD} = 3.0 V	Square wave input		2.9	4.2	mA
				Resonator connection		3.0	4.3	
			f_{MX} = 5 MHz Notes 2, 3, V_{DD} = 3.0 V	Square wave input		1.6	2.5	mA
				Resonator connection		1.7	2.6	
			f_{MX} = 5 MHz Notes 2, 3, V_{DD} = 2.0 V	Square wave input		1.2	2.1	mA
				Resonator connection		1.2	2.1	
			f_{IH40} = 40 MHz Note 4	V_{DD} = 5.0 V		5.5	8.4	mA
				V_{DD} = 3.0 V		5.5	8.4	
			f_{IH} = 8 MHz Note 4	V_{DD} = 5.0 V		2.4	3.5	mA
				V_{DD} = 3.0 V		2.4	3.5	
			f_{SUB} = 32.768 kHz Note 5, T_A = –40 to +50 °C	V_{DD} = 5.0 V		3.7	7.5	μA
				V_{DD} = 3.0 V		3.7	7.5	μA
			f_{SUB} = 32.768 kHz Note 5, T_A = –40 to +70 °C	V_{DD} = 5.0 V		3.7	9.4	μA
				V_{DD} = 3.0 V		3.7	9.4	μA
			f_{SUB} = 32.768 kHz Note 5, T_A = –40 to +85 °C	V_{DD} = 5.0 V		3.7	11.7	μA
				V_{DD} = 3.0 V		3.7	11.7	μA

Notes 1. Total current flowing into V_{DD}, EV_{DD}, and AV_{REF}, including the input leakage current flowing when the level of the input pin is fixed to V_{DD} or V_{SS}. The maximum value includes the peripheral operation current. However, not including the current flowing into the A/D converter, programmable gain amplifier, comparator, LVI circuit, I/O port, and on-chip pull-up/pull-down resistors.

2. When internal high-speed oscillation, 40 MHz internal high-speed oscillation, and subsystem clock are stopped.

3. When AMPH (bit 0 of clock operation mode control register (CMC)) = 0, FSEL (bit 0 of operation speed mode control register (OSMC)) = 0 .

4. When high-speed system clock and subsystem clock are stopped.

5. When internal high-speed oscillation, 40 MHz internal high-speed oscillation, and high-speed system clock are stopped. When watchdog timer is stopped.

Remarks 1. f_{MX}: High-speed system clock frequency (X1 clock oscillation frequency or external main system clock frequency)

f_{IH40}: 40 MHz internal high-speed oscillation clock frequency

f_{IH}: Internal high-speed oscillation clock frequency

f_{SUB}: Subsystem clock frequency (XT1 clock oscillation frequency)

RMC: Regulator mode control register

2. Temperature condition of the TYP. value is T_A = 25°C.

Caution The pins mounted depend on the product. Refer to Caution 2 at the beginning of this chapter.

DC Characteristics (9/11)

(T_A = –40 to +85°C, 2.7 V ≤ V_{DD} = EV_{DD} ≤ 5.5 V, 2.7 V ≤ AV_{REF} ≤ V_{DD}, V_{SS} = EV_{SS} = AV_{SS} = 0 V)

Parameter	Symbol	Conditions			MIN.	TYP.	MAX.	Unit
Supply current	I_{DD2} Note 1	HALT mode	f_{MX} = 20 MHz Note 2, V_{DD} = 5.0 V	Square wave input		1.1	3.2	mA
				Resonator connection		1.4	3.5	
			f_{MX} = 20 MHz Note 2, V_{DD} = 3.0 V	Square wave input		1.1	3.2	mA
				Resonator connection		1.4	3.5	
			f_{MX} = 10 MHz Notes 2, 3, V_{DD} = 5.0 V	Square wave input		0.65	2.0	mA
				Resonator connection		0.75	2.1	
			f_{MX} = 10 MHz Notes 2, 3, V_{DD} = 3.0 V	Square wave input		0.65	2.0	mA
				Resonator connection		0.75	2.1	
			f_{MX} = 5 MHz Notes 2, 3, V_{DD} = 3.0 V	Square wave input		0.39	1.7	mA
				Resonator connection		0.44	1.7	mA
			f_{IH40} = 40 MHz Note 4	V_{DD} = 5.0 V		1.6	4.5	mA
				V_{DD} = 3.0 V		1.6	4.5	
			f_{IH} = 8 MHz Note 4	V_{DD} = 5.0 V		0.45	1.6	mA
				V_{DD} = 3.0 V		0.45	1.6	

Notes 1. Total current flowing into V_{DD}, EV_{DD}, and AV_{REF}, including the input leakage current flowing when the level of the input pin is fixed to V_{DD} or V_{SS}. The maximum value includes the peripheral operation current. However, not including the current flowing into the A/D converter, programmable gain amplifier, comparator, LVI circuit, I/O port, and on-chip pull-up/pull-down resistors. During HALT instruction execution by flash memory.

2. When internal high-speed oscillation, 40 MHz internal high-speed oscillation, and subsystem clock are stopped.

3. When AMPH (bit 0 of clock operation mode control register (CMC)) = 0, FSEL (bit 0 of operation speed mode control register (OSMC)) = 0 .

4. When high-speed system clock and subsystem clock are stopped.

Remarks 1. f_{MX}: High-speed system clock frequency (X1 clock oscillation frequency or external main system clock frequency)

f_{IH40}: 40 MHz internal high-speed oscillation clock frequency

f_{IH}: Internal high-speed oscillation clock frequency

RMC: Regulator mode control register

2. Temperature condition of the TYP. value is T_A = 25°C.

Caution The pins mounted depend on the product. Refer to Caution 2 at the beginning of this chapter.

DC Characteristics (10/11)

(T_A = –40 to +85°C, 2.7 V ≤ V_{DD} = EV_{DD} ≤ 5.5 V, 2.7 V ≤ AV_{REF} ≤ V_{DD}, V_{SS} = EV_{SS} = AV_{SS} = 0 V)

Parameter	Symbol	Conditions			MIN.	TYP.	MAX.	Unit
Supply current	I_{DD2} Note 1	HALT mode	f_{SUB} = 32.768 kHz Note 2, T_A = –40 to +50 °C	V_{DD} = 5.0 V		0.9	2.9	μA
				V_{DD} = 3.0 V		0.9	2.9	μA
			f_{SUB} = 32.768 kHz Note 2, T_A = –40 to +70 °C	V_{DD} = 5.0 V		0.9	4.8	μA
				V_{DD} = 3.0 V		0.9	4.8	μA
			f_{SUB} = 32.768 kHz Note 2, T_A = –40 to +85 °C	V_{DD} = 5.0 V		0.9	7.1	μA
				V_{DD} = 3.0 V		0.9	7.1	μA
	I_{DD3} Note 3	STOP mode	T_A = –40 to +50 °C			0.33	2.1	μA
			T_A = –40 to +70 °C			0.33	4	μA
			T_A = –40 to +85 °C			0.33	6.2	μA

Notes 1. Total current flowing into V_{DD}, EV_{DD}, and AV_{REF}, including the input leakage current flowing when the level of the input pin is fixed to V_{DD} or V_{SS}. The maximum value includes the peripheral operation current. However, not including the current flowing into the A/D converter, programmable gain amplifier, comparator, LVI circuit, I/O port, and on-chip pull-up/pull-down resistors. During HALT instruction execution by flash memory.

2. When internal high-speed oscillation, 40 MHz internal high-speed oscillation, and subsystem clock are stopped. When all peripheral functions are stopped.

3. Total current flowing into V_{DD}, EV_{DD}, and AV_{REF}, including the input leakage current flowing when the level of the input pin is fixed to V_{DD} or V_{SS}. The maximum value includes the peripheral operation current. However, not including the current flowing into the A/D converter, programmable gain amplifier, comparator, LVI circuit, I/O port, and on-chip pull-up/pull-down resistors. When subsystem clock is stopped. When watchdog timer is stopped.

Remarks 1. f_{SUB}: Subsystem clock frequency (XT1 clock oscillation frequency)

2. Temperature condition of the TYP. value is T_A = 25°C.

Caution The pins mounted depend on the product. Refer to Caution 2 at the beginning of this chapter.

DC Characteristics (11/11)

(T_A = –40 to +85°C, 2.7 V ≤ V_{DD} = EV_{DD} ≤ 5.5 V, 2.7 V ≤ AV_{REF} ≤ V_{DD}, V_{SS} = EV_{SS} = AV_{SS} = 0 V)

Parameter	Symbol	Conditions			MIN.	TYP.	MAX.	Unit
RTC operating current	I_{RTC} Notes 1, 2	f_{SUB} = 32.768 kHz		V_{DD} = 3.0 V		0.2	1.0	μA
Watchdog timer operating current	I_{WDT} Notes 2, 3	f_{IL} = 30 kHz				0.31	0.35	μA
A/D converter operating current	I_{ADC} Note 4	During conversion at maximum speed	High speed mode 1	AV_{REF} = V_{DD} = 5.0 V		1.72	3.2	mA
			High speed mode 2	AV_{REF} = V_{DD} = 3.0 V		0.72	1.6	mA
			Normal mode	AV_{REF} = V_{DD} = 5.0 V		0.86	1.9	mA
			Low voltage mode	AV_{REF} = V_{DD} = 3.0 V		0.37	0.8	mA
Programmable gain amplifier operating current	I_{AMP} Note 5					0.56	1.2	mA
Comparator operating current	I_{CMP} Note 6	Per channel when the internal reference voltage is not used		AV_{REF} = V_{DD} = 5.0 V		120	240	μA
				AV_{REF} = V_{DD} = 3.0 V			120	μA
		Per channel when the internal reference voltage is not used		AV_{REF} = V_{DD} = 5.0 V		160	300	μA
				AV_{REF} = V_{DD} = 3.0 V			150	μA
LVI operating current	I_{LVI} Note 5					9	18	μA

Notes 1. Current flowing only to the real-time counter (excluding the operating current of the XT1 oscillator). If the real-time counter operates in the HALT mode, the value of this current is the value of the 78K0R/Ix3 current plus the I_{RTC} value.

2. When internal high-speed oscillation, 40 MHz internal high-speed oscillation, and high-speed system clock are stopped.

3. Current flowing only to the watchdog timer (including the operating current of the 30 kHz internal oscillator). The current value of the 78K0R/Ix3 is the sum of I_{DD1}, I_{DD2} or I_{DD3} and I_{WDT} when the watchdog timer operates during f_{CLK} = f_{SUB}/2 or STOP mode.

4. Current flowing only to the A/D converter (AV_{REF} pin). The current value of the 78K0R/Ix3 is the sum of I_{DD1} or I_{DD2} and I_{ADC} when the A/D converter operates in an operating mode or the HALT mode.

5. Current flowing only to the programmable gain amplifier (AV_{REF} pin). The current value of the 78K0R/Ix3 is the sum of I_{DD1} or I_{DD2} and I_{ADC} when the programmable gain amplifier operates in an operating mode or the HALT mode.

6. Current flowing only to the comparator (AV_{REF} pin). The current value of the 78K0R/Ix3 is the sum of I_{DD1} or I_{DD2} and I_{ADC} when the comparator operates in an operating mode or the HALT mode.

7. Current flowing only to the LVI circuit. The current value of the 78K0R/Ix3 is the sum of I_{DD1}, I_{DD2} or I_{DD3} and I_{LVI} when the LVI circuit operates in the Operating, HALT or STOP mode.

Remarks 1. f_{IL}: Internal low-speed oscillation clock frequency
f_{SUB}: Subsystem clock frequency (XT1 clock oscillation frequency)
f_{CLK}: CPU/peripheral hardware clock frequency

2. Temperature condition of the TYP. value is T_A = 25°C.

Caution The pins mounted depend on the product. Refer to Caution 2 at the beginning of this chapter.

AC Characteristics

(1) Basic operation (1/6)

(T_A = –40 to +85°C, 2.7 V ≤ V_{DD} = EV_{DD} ≤ 5.5 V, 2.7 V ≤ AV_{REF} ≤ V_{DD}, V_{SS} = EV_{SS} = AV_{SS} = 0 V)

Items	Symbol	Conditions			MIN.	TYP.	MAX.	Unit
Instruction cycle (minimum instruction execution time)	T_{CY}	Main system clock (f_{MAIN}) operation	Normal current mode	2.7 V ≤ V_{DD} ≤ 5.5 V	0.05		8	μs
			Low consumption current mode		1		8	μs
		Subsystem clock (f_{SUB}) operation Note			57.2	61	62.5	μs
		In the self programming mode	Normal current mode	2.7 V ≤ V_{DD} ≤ 5.5 V	0.05		0.5	μs
External main system clock frequency	f_{EX}	2.7 V ≤ V_{DD} ≤ 5.5 V			2.0		20.0	MHz
External main system clock input high-level width, low-level width	t_{EXH}, t_{EXL}	2.7 V ≤ V_{DD} ≤ 5.5 V			24			ns
TI00, TI02 to TI11, SLTI input high-level width, low-level width	t_{TIH}, t_{TIL}	f_{MCK} = f_{IH40}			2/f_{MCK}+10			ns
		Other than above			1/f_{MCK}+10			ns
TO00, TO02 to TO11, SLTO output frequency	f_{TO}	2.7 V ≤ V_{DD} ≤ 5.5 V					10	MHz
PCLBUZ0, PCLBUZ0 output frequency	f_{PCL}	2.7 V ≤ V_{DD} ≤ 5.5 V					10	MHz
Interrupt input high-level width, low-level width	t_{INTH}, t_{INTL}				1			μs
$\overline{\text{RESET}}$ low-level width	t_{RSL}				10			μs

Note The 78K0R/IB3 doesn't have the subsystem clock.

Remarks 1. f_{MCK}: Macro operation clock frequency
(Operation clock to be set by the CKSn bit of the TMRn register. n: Channel number (n = 00 to 11))

2. For details on the normal current mode and low consumption current mode according to the regulator output voltage, refer to **CHAPTER 22 REGULATOR**.

Caution The pins mounted depend on the product. Refer to Caution 2 at the beginning of this chapter.

(1) Basic operation (2/6)

Minimum instruction execution time during main system clock operation (FSEL = 0, RMC = 00H)

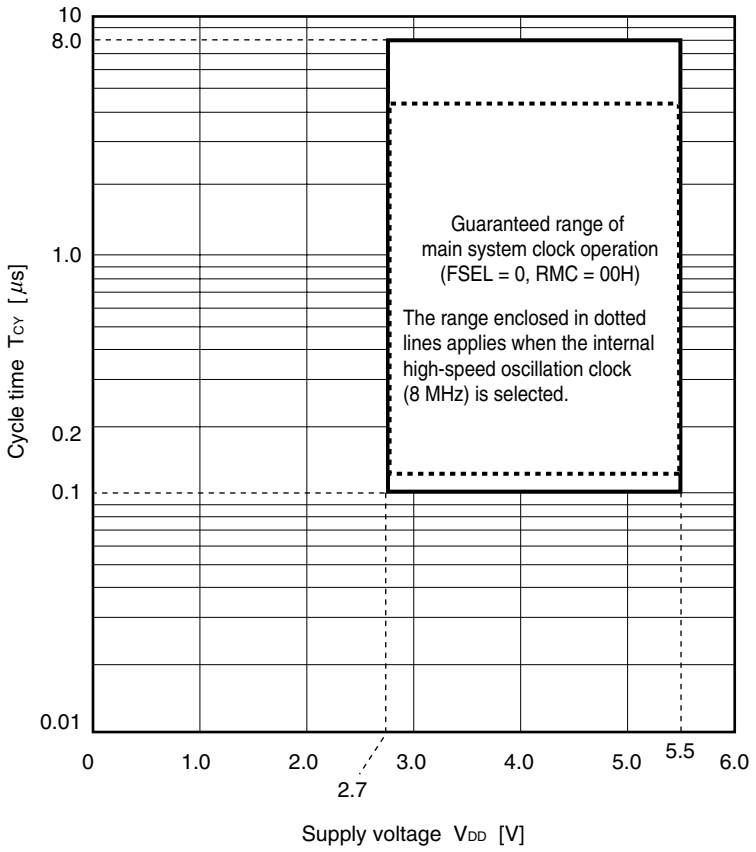

Remark FSEL: Bit 0 of the operation speed mode control register (OSMC)
RMC: Regulator mode control register

Caution The pins mounted depend on the product. Refer to Caution 2 at the beginning of this chapter.

(1) Basic operation (3/6)

Minimum instruction execution time during main system clock operation (FSEL = 1, RMC = 00H)

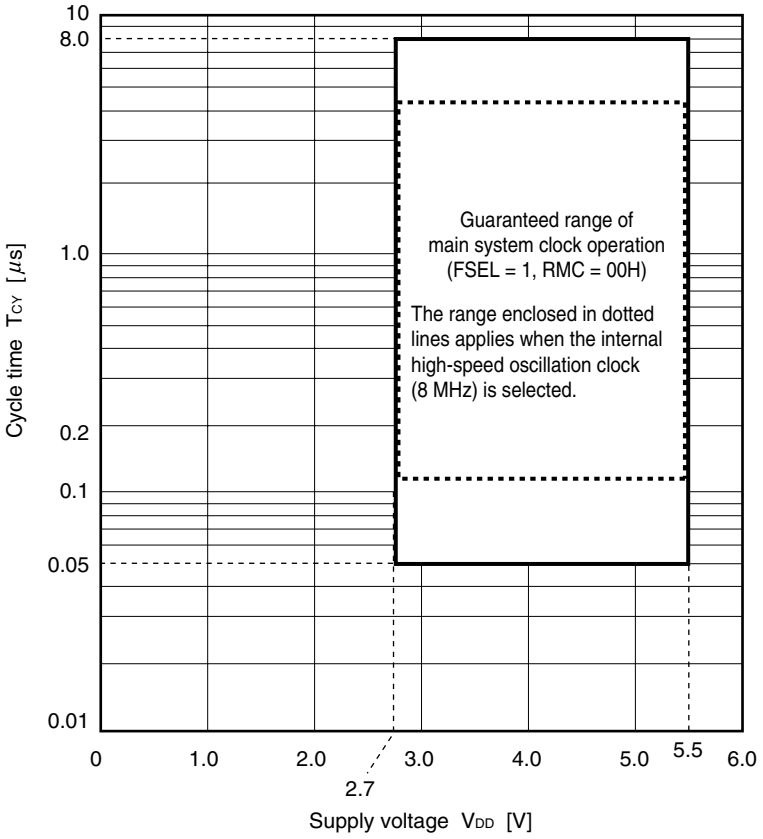

Caution Set FSEL = 0 to shift to STOP mode while V_{DD} = 2.7 V.

Remark FSEL: Bit 0 of the operation speed mode control register (OSMC)
RMC: Regulator mode control register

Caution The pins mounted depend on the product. Refer to Caution 2 at the beginning of this chapter.

(1) Basic operation (4/6)

Minimum instruction execution time during main system clock operation (FSEL = 0, RMC = 5AH)

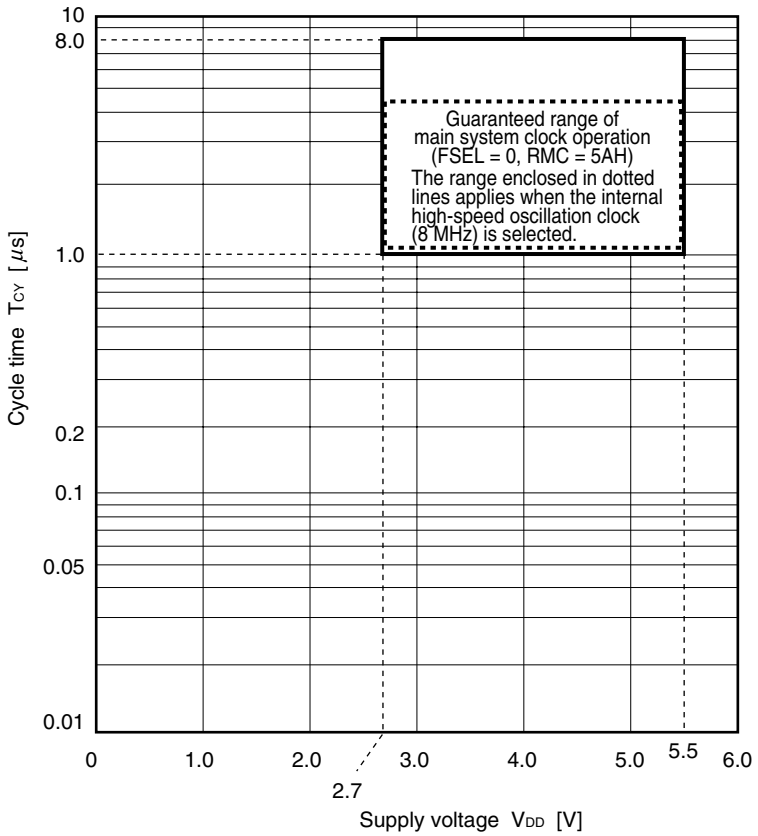

Remarks 1. FSEL: Bit 0 of the operation speed mode control register (OSMC)
RMC: Regulator mode control register

2. The entire voltage range is 1 MHz (MAX.) when RMC is set to 5AH.

Caution The pins mounted depend on the product. Refer to Caution 2 at the beginning of this chapter.

(1) Basic operation (5/6)

Minimum instruction execution time during self programming mode (RMC = 00H)

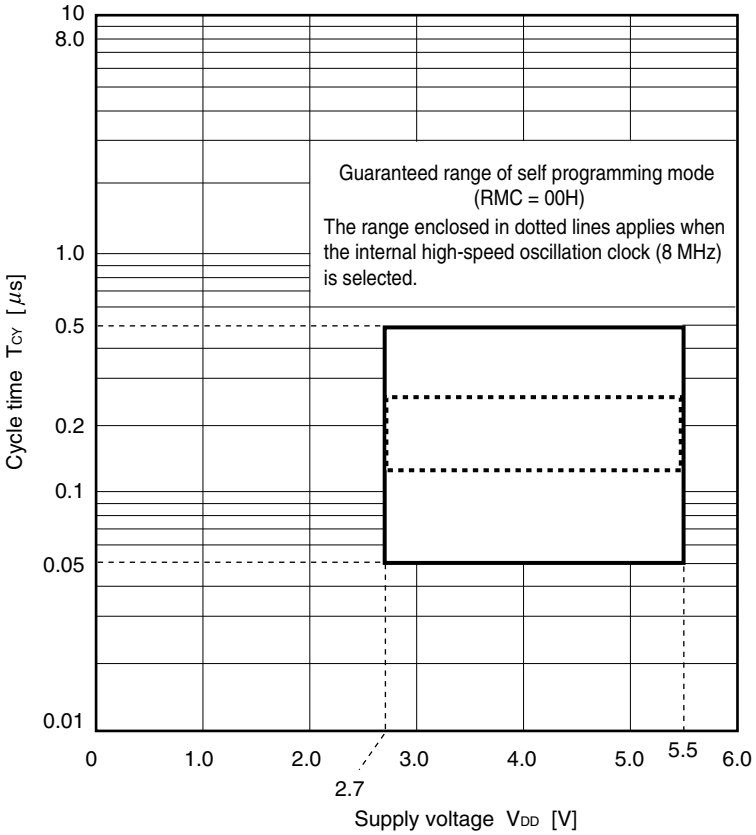

Remarks 1. RMC: Regulator mode control register

2. The self programming function cannot be used when RMC is set to 5AH or the CPU operates with the subsystem clock.

Caution The pins mounted depend on the product. Refer to Caution 2 at the beginning of this chapter.

(1) Basic operation (6/6)

AC Timing Test Points

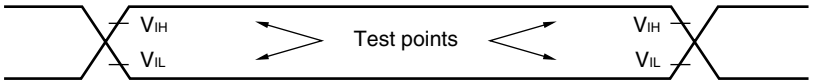

External Main System Clock Timing

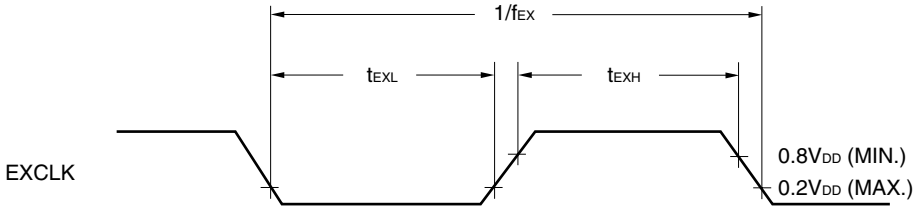

TI Timing

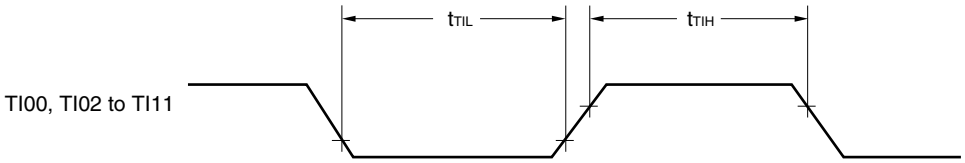

Interrupt Request Input Timing

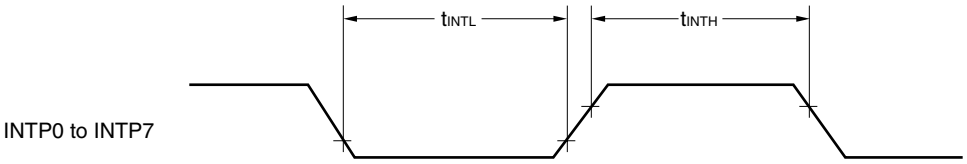

$\overline{\text{RESET}}$ Input Timing

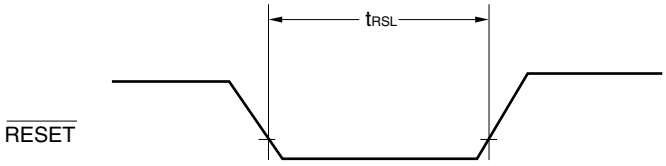

Caution The pins mounted depend on the product. Refer to Caution 2 at the beginning of this chapter.

(2) Serial interface: Serial array unit (1/17)
(T_A = –40 to +85°C, 2.7 V ≤ V_{DD} = EV_{DD} ≤ 5.5 V, V_{SS} = EV_{SS} = AV_{SS} = 0 V)

(a) During communication at same potential (UART mode) (dedicated baud rate generator output)

Parameter	Symbol	Conditions	MIN.	TYP.	MAX.	Unit
Transfer rate					f_{MCK}/6	Mbps
		f_{CLK} = 20 MHz, f_{MCK} = f_{CLK}			3.3	Mbps

UART mode connection diagram (during communication at same potential)

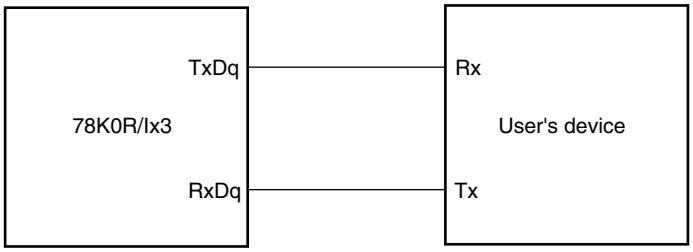

UART mode bit width (during communication at same potential) (reference)

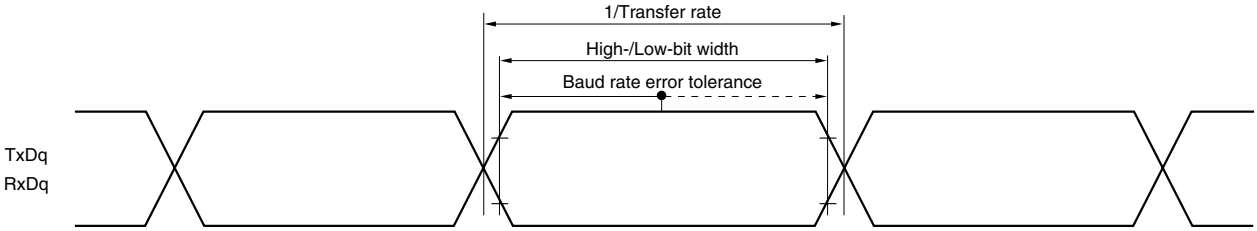

Caution Select the normal input buffer for RxDq and the normal output mode for TxDq by using the PIMg and POMg registers.

Remarks 1. q: UART number (q = 0, 1) , g: PIM and POM number (g = 3, 7)
2. f_{MCK}: Serial array unit operation clock frequency
(Operation clock to be set by the CKS0n bit of the SMR0n register. n: Channel number (n = 0 to 3))

Caution The pins mounted depend on the product. Refer to Caution 2 at the beginning of this chapter.

(2) Serial interface: Serial array unit (2/17)

(T_A = –40 to +85°C, 2.7 V ≤ V_{DD} = EV_{DD} ≤ 5.5 V, V_{SS} = EV_{SS} = AV_{SS} = 0 V)

(b) During communication at same potential (CSI mode) (master mode, $\overline{SCKp}$... internal clock output)

Parameter	Symbol	Conditions	MIN.	TYP.	MAX.	Unit
$\overline{SCKp}$ cycle time	t_{KCY1}	4.0 V ≤ V_{DD} ≤ 5.5 V	200 Note 1			ns
		2.7 V ≤ V_{DD} < 4.0 V	300 Note 1			ns
$\overline{SCKp}$ high-/low-level width	t_{KH1}, t_{KL1}	4.0 V ≤ V_{DD} ≤ 5.5 V	t_{KCY1}/2 – 20			ns
		2.7 V ≤ V_{DD} < 4.0 V	t_{KCY1}/2 – 35			ns
SIp setup time (to $\overline{SCKp}$↑) Note 2	t_{SIK1}	4.0 V ≤ V_{DD} ≤ 5.5 V	70			ns
		2.7 V ≤ V_{DD} < 4.0 V	100			ns
SIp hold time (from $\overline{SCKp}$↑) Note 3	t_{KSI1}		30			ns
Delay time from $\overline{SCKp}$↓ to SOp output Note 4	t_{KSO1}	C = 30 pF Note 5			40	ns

Notes 1. The value must also be 4/f_{CLK} or more.

2. When DAP0n = 0 and CKP0n = 0, or DAP0n = 1 and CKP0n = 1. The SIp setup time becomes "to $\overline{SCKp}$↓" when DAP0n = 0 and CKP0n = 1, or DAP0n = 1 and CKP0n = 0.

3. When DAP0n = 0 and CKP0n = 0, or DAP0n = 1 and CKP0n = 1. The SIp hold time becomes "from $\overline{SCKp}$↓" when DAP0n = 0 and CKP0n = 1, or DAP0n = 1 and CKP0n = 0.

4. When DAP0n = 0 and CKP0n = 0, or DAP0n = 1 and CKP0n = 1. The delay time to SOp output becomes "from $\overline{SCKp}$↑" when DAP0n = 0 and CKP0n = 1, or DAP0n = 1 and CKP0n = 0.

5. C is the load capacitance of the $\overline{SCKp}$ and SOp output lines.

Caution Select the normal input buffer for SIp and the normal output mode for SOp and $\overline{SCKp}$ by using the PIMg and POMg registers.

Remarks 1. p: CSI number (p = 00, 01, 10),
g: PIM and POM number (g = 3, 7)

2. n: Channel number (n = 0 to 2)

Caution The pins mounted depend on the product. Refer to Caution 2 at the beginning of this chapter.

(2) Serial interface: Serial array unit (3/17)

(T_A = –40 to +85°C, 2.7 V ≤ V_{DD} = EV_{DD} ≤ 5.5 V, V_{SS} = EV_{SS} = AV_{SS} = 0 V)

(c) During communication at same potential (CSI mode) (slave mode, $\overline{SCKp}$... external clock input)

Parameter	Symbol	Conditions		MIN.	TYP.	MAX.	Unit
$\overline{SCKp}$ cycle time	t_{KCY2}	4.0 V ≤ V_{DD} ≤ 5.5 V		6/f_{MCK}			ns
		2.7 V ≤ V_{DD} ≤ 4.0 V	16 MHz < f_{MCK}	8/f_{MCK}			ns
			f_{MCK} ≤ 16 MHz	6/f_{MCK}			ns
$\overline{SCKp}$ high-/low-level width	t_{KH2}, t_{KL2}			f_{KCY2}/2			ns
SIp setup time (to $\overline{SCKp}$↑) Note 1	t_{SIK2}			80			ns
SIp hold time (from $\overline{SCKp}$↑) Note 2	t_{KSI2}			1/f_{MCK}+50			ns
Delay time from $\overline{SCKp}$↓ to SOp output Note 3	t_{KSO2}	C = 30 pF Note 4	4.0 V ≤ V_{DD} ≤ 5.5 V			2/f_{MCK}+45	ns
			2.7 V ≤ V_{DD} < 4.0 V			2/f_{MCK}+57	ns

Notes 1. When DAP0n = 0 and CKP0n = 0, or DAP0n = 1 and CKP0n = 1. The SIp setup time becomes "to $\overline{SCKp}$↓" when DAP0n = 0 and CKP0n = 1, or DAP0n = 1 and CKP0n = 0.

2. When DAP0n = 0 and CKP0n = 0, or DAP0n = 1 and CKP0n = 1. The SIp hold time becomes "from $\overline{SCKp}$↓" when DAP0n = 0 and CKP0n = 1, or DAP0n = 1 and CKP0n = 0.

3. When DAP0n = 0 and CKP0n = 0, or DAP0n = 1 and CKP0n = 1. The delay time to SOp output becomes "from $\overline{SCKp}$↑" when DAP0n = 0 and CKP0n = 1, or DAP0n = 1 and CKP0n = 0.

4. C is the load capacitance of the $\overline{SCKp}$ and SOp output lines.

Caution Select the normal input buffer for SIp and $\overline{SCKp}$ and the normal output mode for SOp by using the PIMg and POMg registers.

Remarks 1. p: CSI number (p = 00, 01, 10),
g: PIM and POM number (g = 3, 7)

2. f_{MCK}: Serial array unit operation clock frequency
(Operation clock to be set by the CKS0n bit of the SMR0n register. n: Channel number (n = 0 to 2))

Caution The pins mounted depend on the product. Refer to Caution 2 at the beginning of this chapter.

(2) Serial interface: Serial array unit (4/17)

CSI mode connection diagram (during communication at same potential)

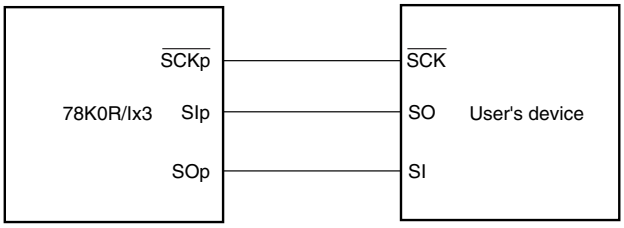

CSI mode serial transfer timing (during communication at same potential)
(When DAP0n = 0 and CKP0n = 0, or DAP0n = 1 and CKP0n = 1.)

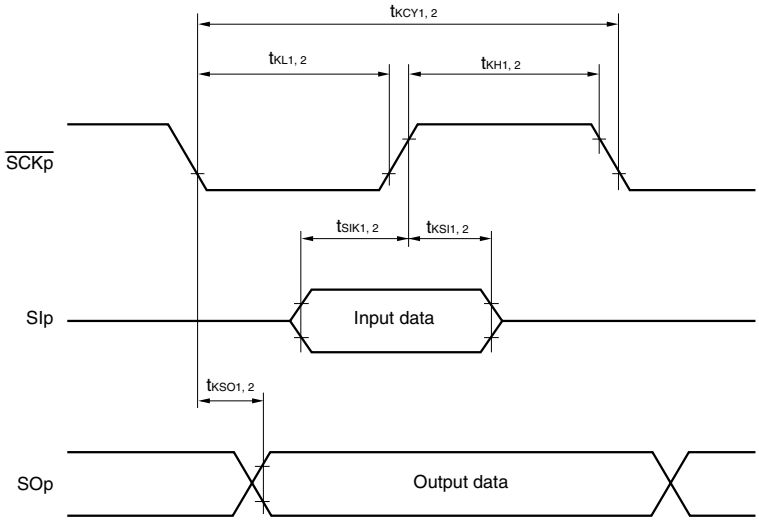

CSI mode serial transfer timing (during communication at same potential)
(When DAP0n = 0 and CKP0n = 1, or DAP0n = 1 and CKP0n = 0.)

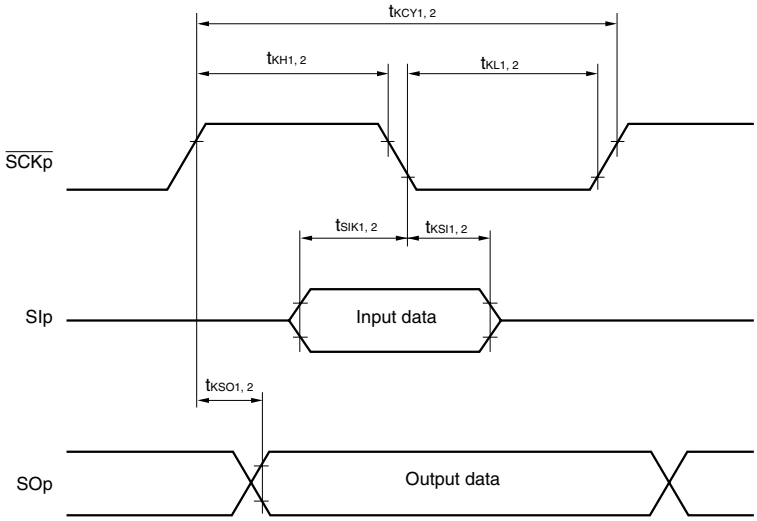

Remarks 1. p: CSI number (p = 00, 01, 10),
2. n: Channel number (n = 0 to 2))

Caution The pins mounted depend on the product. Refer to Caution 2 at the beginning of this chapter.

(2) Serial interface: Serial array unit (5/17)

(T_A = –40 to +85°C, 2.7 V ≤ V_{DD} = EV_{DD} ≤ 5.5 V, V_{SS} = EV_{SS} = AV_{SS} = 0 V)

(d) During communication at same potential (simplified I²C mode)

Parameter	Symbol	Conditions	MIN.	MAX.	Unit
SCL10 clock frequency	f_{SCL}	2.7 V ≤ V_{DD} ≤ 5.5 V, C_b = 100 pF, R_b = 3 kΩ		400	kHz
Hold time when SCL10 = "L"	t_{LOW}	2.7 V ≤ V_{DD} ≤ 5.5 V, C_b = 100 pF, R_b = 3 kΩ	1200		ns
Hold time when SCL10 = "H"	t_{HIGH}	2.7 V ≤ V_{DD} ≤ 5.5 V, C_b = 100 pF, R_b = 3 kΩ	1200		ns
Data setup time (reception)	$t_{SU:DAT}$	2.7 V ≤ V_{DD} ≤ 5.5 V	1/f_{MCK}+120		ns
Data hold time (transmission)	$t_{HD:DAT}$	2.7 V ≤ V_{DD} ≤ 5.5 V, C_b = 100 pF, R_b = 3 kΩ	0	660	ns

Simplified I²C mode mode connection diagram (during communication at same potential)

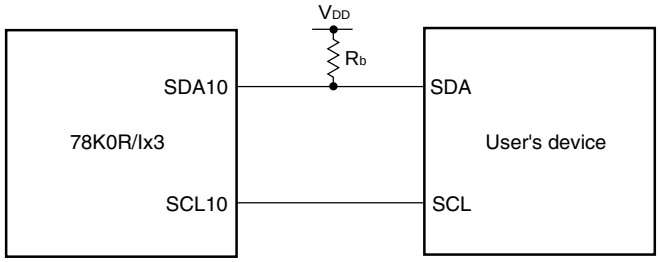

Simplified I²C mode serial transfer timing (during communication at same potential)

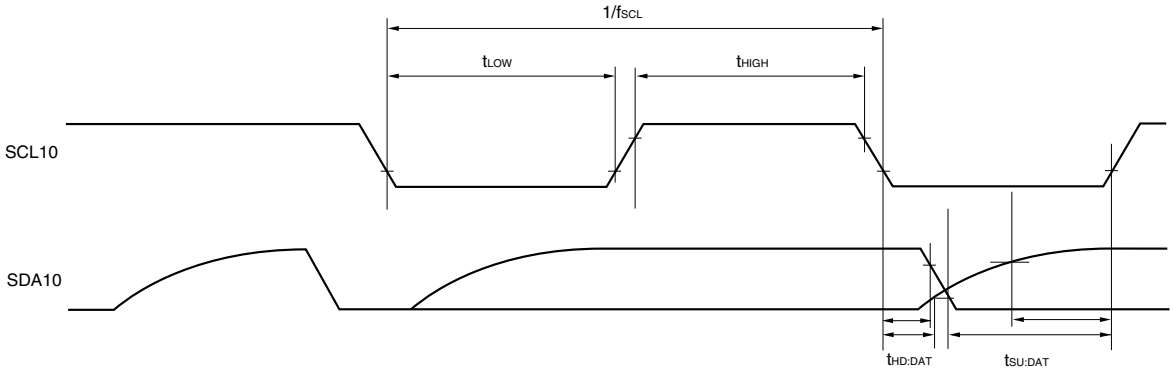

Caution Select the normal input buffer and the N-ch open drain output (V_{DD} tolerance) mode for SDA10 and the normal output mode for SCL10 by using the PIM3 and POM3 registers.

Remarks 1. R_b[Ω]:Communication line (SDA10) pull-up resistance,
C_b[F]: Communication line (SCL10, SDA10) load capacitance

2. f_{MCK}: Serial array unit operation clock frequency
(Operation clock to be set by the CKS02 bit of the SMR02 register.)

Caution The pins mounted depend on the product. Refer to Caution 2 at the beginning of this chapter.

(2) Serial interface: Serial array unit (6/17)

(T_A = –40 to +85°C, 2.7 V ≤ V_{DD} = EV_{DD} ≤ 5.5 V, V_{SS} = EV_{SS} = AV_{SS} = 0 V)

(e) Communication at different potential (2.5 V, 3 V) (UART mode) (dedicated baud rate generator output) (1/2)

Parameter	Symbol	Conditions			MIN.	TYP.	MAX.	Unit
Transfer rate		reception	4.0 V ≤ V_{DD} ≤ 5.5 V, 2.7 V ≤ V_b ≤ 4.0 V				f_{MCK}/6	bps
				f_{CLK} = 20 MHz, f_{MCK} = f_{CLK}			3.3	Mbps
			2.7 V ≤ V_{DD} < 4.0 V, 2.3 V ≤ V_b ≤ 2.7 V				f_{MCK}/6	bps
				f_{CLK} = 20 MHz, f_{MCK} = f_{CLK}			3.3	Mbps

Caution Select the TTL input buffer for RxDq and the N-ch open drain output (V_{DD} tolerance) mode for TxDq by using the PIMg and POMg registers.

Remarks 1. q: UART number (q = 0, 1) , g: PIM and POM number (g = 3, 7)

2. V_b[V]: Communication line voltage

3. f_{MCK}: Serial array unit operation clock frequency
(Operation clock to be set by the CKS0n bit of the SMR0n register. n: Channel number (n = 0 to 3))

4. V_{IH} and V_{IL} below are observation points for the AC characteristics of the serial array unit when communicating at different potentials in UART mode.
4.0 V ≤ V_{DD} ≤ 5.5 V, 2.7 V ≤ V_b ≤ 4.0 V: V_{IH} = 2.2 V, V_{IL} = 0.8 V
2.7 V ≤ V_{DD} ≤ 4.0 V, 2.3 V ≤ V_b ≤ 2.7 V: V_{IH} = 2.0 V, V_{IL} = 0.5 V

Caution The pins mounted depend on the product. Refer to Caution 2 at the beginning of this chapter.

(2) Serial interface: Serial array unit (7/17)

(T_A = –40 to +85°C, 2.7 V ≤ V_{DD} = EV_{DD} ≤ 5.5 V, V_{SS} = EV_{SS} = AV_{SS} = 0 V)

(e) Communication at different potential (2.5 V, 3 V) (UART mode) (dedicated baud rate generator output) (2/2)

Parameter	Symbol	Conditions			MIN.	TYP.	MAX.	Unit
Transfer rate		transmission	4.0 V ≤ V_{DD} ≤ 5.5 V, 2.7 V ≤ V_b ≤ 4.0 V				**Note 1**	bps
				f_{CLK} = 16.8 MHz, f_{MCK} = f_{CLK}, C_b = 50 pF, R_b = 1.4 kΩ, V_b = 2.7 V			2.8 Note 2	Mbps
			2.7 V ≤ V_{DD} < 4.0 V, 2.3 V ≤ V_b ≤ 2.7 V				**Note 3**	bps
				f_{CLK} = 19.2 MHz, f_{MCK} = f_{CLK}, C_b = 50 pF, R_b = 2.7 kΩ, V_b = 2.3 V			1.2 Note 4	Mbps

Notes 1. The smaller maximum transfer rate derived by using $f_{MCK}/6$ or the following expression is the valid maximum transfer rate.

Expression for calculating the transfer rate when 4.0 V ≤ V_{DD} = EV_{DD} ≤ 5.5 V and 2.7 V ≤ V_b ≤ 4.0 V

$$\text{Maximum transfer rate} = \frac{1}{\{-C_b \times R_b \times \ln(1 - \frac{2.2}{V_b})\} \times 3} \text{ [bps]}$$

$$\text{Baud rate error (theoretical value)} = \frac{\frac{1}{\text{Transfer rate} \times 2} - \{-C_b \times R_b \times \ln(1 - \frac{2.2}{V_b})\}}{(\frac{1}{\text{Transfer rate}}) \times \text{Number of transferred bits}} \times 100 \text{ [\%]}$$

* This value is the theoretical value of the relative difference between the transmission and reception sides.

2. This value as an example is calculated when the conditions described in the “Conditions” column are met. Refer to Note 1 above to calculate the maximum transfer rate under conditions of the customer.

3. The smaller maximum transfer rate derived by using $f_{MCK}/6$ or the following expression is the valid maximum transfer rate.

Expression for calculating the transfer rate when 2.7 V ≤ V_{DD} = EV_{DD} < 4.0 V and 2.3 V ≤ V_b ≤ 2.7 V

$$\text{Maximum transfer rate} = \frac{1}{\{-C_b \times R_b \times \ln(1 - \frac{2.0}{V_b})\} \times 3} \text{ [bps]}$$

$$\text{Baud rate error (theoretical value)} = \frac{\frac{1}{\text{Transfer rate} \times 2} - \{-C_b \times R_b \times \ln(1 - \frac{2.0}{V_b})\}}{(\frac{1}{\text{Transfer rate}}) \times \text{Number of transferred bits}} \times 100 \text{ [\%]}$$

* This value is the theoretical value of the relative difference between the transmission and reception sides.

4. This value as an example is calculated when the conditions described in the “Conditions” column are met. Refer to Note 3 above to calculate the maximum transfer rate under conditions of the customer.

Caution Select the TTL input buffer for RxDq and the N-ch open drain output (V_{DD} tolerance) mode for TxDq by using the PIMg and POMg registers.

(Remarks are given on the next page.)

Caution The pins mounted depend on the product. Refer to Caution 2 at the beginning of this chapter.

(2) Serial interface: Serial array unit (8/17)

Remarks 1. R_b[Ω]:Communication line (TxDq) pull-up resistance, C_b[F]: Communication line (TxDq) load capacitance, V_b[V]: Communication line voltage

2. q: UART number (q = 0, 1) , g: PIM and POM number (g = 3, 7)

3. f_{MCK}: Serial array unit operation clock frequency
(Operation clock to be set by the CKS0n bit of the SMR0n register. n: Channel number (n = 0 to 3))

4. V_{IH} and V_{IL} below are observation points for the AC characteristics of the serial array unit when communicating at different potentials in UART mode.
4.0 V ≤ V_{DD} ≤ 5.5 V, 2.7 V ≤ V_b ≤ 4.0 V: V_{IH} = 2.2 V, V_{IL} = 0.8 V
2.7 V ≤ V_{DD} ≤ 4.0 V, 2.3 V ≤ V_b ≤ 2.7 V: V_{IH} = 2.0 V, V_{IL} = 0.5 V

5. UART0 of the 78K0R/IB3 cannot communicate at different potential.

Caution The pins mounted depend on the product. Refer to Caution 2 at the beginning of this chapter.

(2) Serial interface: Serial array unit (9/17)

UART mode connection diagram (communication at different potential)

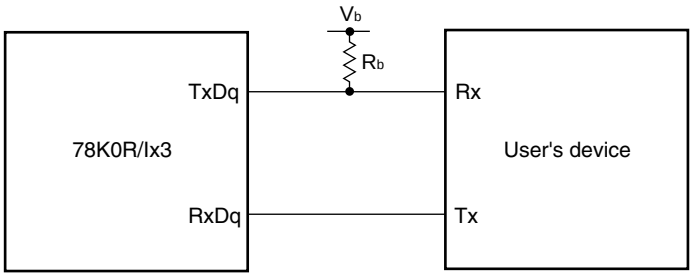

UART mode bit width (communication at different potential) (reference)

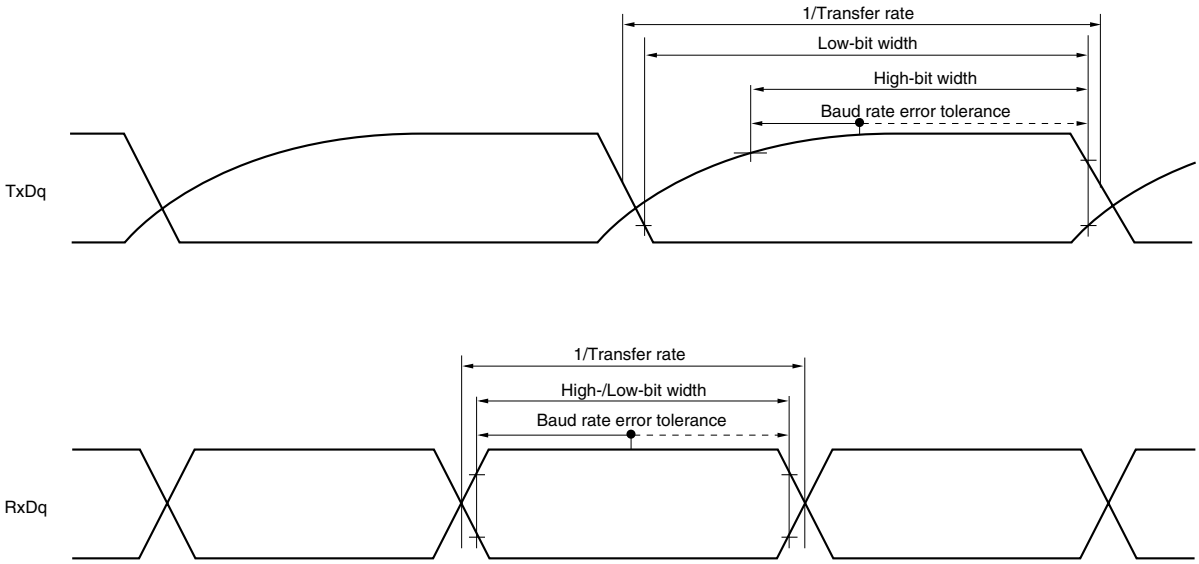

Caution Select the TTL input buffer for RxDq and the N-ch open drain output (V_{DD} tolerance) mode for TxDq by using the PIMg and POMg registers.

Remarks 1. R_b[Ω]:Communication line (TxDq) pull-up resistance, V_b[V]: Communication line voltage

2. q: UART number (q = 0, 1) , g: PIM and POM number (g = 3, 7)

Caution The pins mounted depend on the product. Refer to Caution 2 at the beginning of this chapter.

(2) Serial interface: Serial array unit (10/17)

(T_A = –40 to +85°C, 2.7 V ≤ V_{DD} = EV_{DD} ≤ 5.5 V, V_{SS} = EV_{SS} = AV_{SS} = 0 V)

(f) Communication at different potential (2.5 V, 3 V) (CSI mode) (master mode, $\overline{SCKp}$... internal clock output) (1/2)

Parameter	Symbol	Conditions	MIN.	TYP.	MAX.	Unit
$\overline{SCKp}$ cycle time	t_{KCY1}	4.0 V ≤ V_{DD} ≤ 5.5 V, 2.7 V ≤ V_b ≤ 4.0 V, C_b = 30 pF, R_b = 1.4 kΩ	400 Note 1			ns
		2.7 V ≤ V_{DD} < 4.0 V, 2.3 V ≤ V_b < 2.7 V, C_b = 30 pF, R_b = 2.7 kΩ	800 Note 1			ns
$\overline{SCKp}$ high-level width	t_{KH1}	4.0 V ≤ V_{DD} ≤ 5.5 V, 2.7 V ≤ V_b ≤ 4.0 V, C_b = 30 pF, R_b = 1.4 kΩ	t_{KCY1}/2 – 75			ns
		2.7 V ≤ V_{DD} < 4.0 V, 2.3 V ≤ V_b < 2.7 V, C_b = 30 pF, R_b = 2.7 kΩ	t_{KCY1}/2 – 170			ns
$\overline{SCKp}$ low-level width	t_{KL1}	4.0 V ≤ V_{DD} ≤ 5.5 V, 2.7 V ≤ V_b ≤ 4.0 V, C_b = 30 pF, R_b = 1.4 kΩ	t_{KCY1}/2 – 20			ns
		2.7 V ≤ V_{DD} < 4.0 V, 2.3 V ≤ V_b < 2.7 V, C_b = 30 pF, R_b = 2.7 kΩ	t_{KCY1}/2 – 35			ns
SIp setup time (to $\overline{SCKp}$↑) Note 2	t_{SIK1}	4.0 V ≤ V_{DD} ≤ 5.5 V, 2.7 V ≤ V_b ≤ 4.0 V, C_b = 30 pF, R_b = 1.4 kΩ	150			ns
		2.7 V ≤ V_{DD} < 4.0 V, 2.3 V ≤ V_b < 2.7 V, C_b = 30 pF, R_b = 2.7 kΩ	275			ns
SIp hold time (from $\overline{SCKp}$↑) Note 2	t_{KSI1}	4.0 V ≤ V_{DD} ≤ 5.5 V, 2.7 V ≤ V_b ≤ 4.0 V, C_b = 30 pF, R_b = 1.4 kΩ	30			ns
		2.7 V ≤ V_{DD} < 4.0 V, 2.3 V ≤ V_b < 2.7 V, C_b = 30 pF, R_b = 2.7 kΩ	30			ns
Delay time from $\overline{SCKp}$↓ to SOp output Note 2	t_{KSO1}	4.0 V ≤ V_{DD} ≤ 5.5 V, 2.7 V ≤ V_b ≤ 4.0 V, C_b = 30 pF, R_b = 1.4 kΩ			120	ns
		2.7 V ≤ V_{DD} < 4.0 V, 2.3 V ≤ V_b < 2.7 V, C_b = 30 pF, R_b = 2.7 kΩ			215	ns

Notes 1. The value must also be 4/f_{CLK} or more.

2. When DAP0n = 0 and CKP0n = 0, or DAP0n = 1 and CKP0n = 1.

Caution Select the TTL input buffer for SIp and the N-ch open drain output (V_{DD} tolerance) mode for SOp and $\overline{SCKp}$ by using the PIMg and POMg registers.

Remarks 1. p: CSI number (p = 00, 01, 10),
g: PIM and POM number (g = 3, 7)

2. n: Channel number (n = 0 to 2)

3. R_b[Ω]:Communication line ($\overline{SCKp}$, SOp) pull-up resistance,
C_b[F]: Communication line (SOp, $\overline{SCKp}$) load capacitance, V_b[V]: Communication line voltage

4. V_{IH} and V_{IL} below are observation points for the AC characteristics of the serial array unit when communicating at different potentials in CSI mode.

4.0 V ≤ V_{DD} ≤ 5.5 V, 2.7 V ≤ V_b ≤ 4.0 V: V_{IH} = 2.2 V, V_{IL} = 0.8 V

2.7 V ≤ V_{DD} ≤ 4.0 V, 2.3 V ≤ V_b ≤ 2.7 V: V_{IH} = 2.0 V, V_{IL} = 0.5 V

Caution The pins mounted depend on the product. Refer to Caution 2 at the beginning of this chapter.

(2) Serial interface: Serial array unit (11/17)
(T_A = –40 to +85°C, 2.7 V ≤ V_{DD} = EV_{DD} ≤ 5.5 V, V_{SS} = EV_{SS} = AV_{SS} = 0 V)

(f) Communication at different potential (2.5 V, 3 V) (CSI mode) (master mode, $\overline{SCKp}$... internal clock output) (2/2)

Parameter	Symbol	Conditions	MIN.	TYP.	MAX.	Unit
SIp setup time (to $\overline{SCKp}$↓) Note	t_{SIK1}	4.0 V ≤ V_{DD} ≤ 5.5 V, 2.7 V ≤ V_b ≤ 4.0 V, C_b = 30 pF, R_b = 1.4 kΩ	70			ns
		2.7 V ≤ V_{DD} < 4.0 V, 2.3 V ≤ V_b < 2.7 V, C_b = 30 pF, R_b = 2.7 kΩ	100			ns
SIp hold time (from $\overline{SCKp}$↓) Note	t_{KSI1}	4.0 V ≤ V_{DD} ≤ 5.5 V, 2.7 V ≤ V_b ≤ 4.0 V, C_b = 30 pF, R_b = 1.4 kΩ	30			ns
		2.7 V ≤ V_{DD} < 4.0 V, 2.3 V ≤ V_b < 2.7 V, C_b = 30 pF, R_b = 2.7 kΩ	30			ns
Delay time from $\overline{SCKp}$↑ to SOp output Note	t_{KSO1}	4.0 V ≤ V_{DD} ≤ 5.5 V, 2.7 V ≤ V_b ≤ 4.0 V, C_b = 30 pF, R_b = 1.4 kΩ			40	ns
		2.7 V ≤ V_{DD} < 4.0 V, 2.3 V ≤ V_b < 2.7 V, C_b = 30 pF, R_b = 2.7 kΩ			40	ns

Note When DAP0n = 0 and CKP0n = 1, or DAP0n = 1 and CKP0n = 0.

CSI mode connection diagram (communication at different potential)

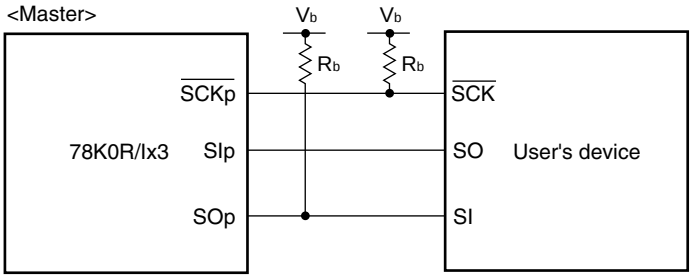

Caution Select the TTL input buffer for SIp and the N-ch open drain output (V_{DD} tolerance) mode for SOp and $\overline{SCKp}$ by using the PIMg and POMg registers.

Remarks 1. p: CSI number (p = 00, 01, 10),
g: PIM and POM number (g = 3, 7)
2. n: Channel number (n = 0 to 2)
3. R_b[Ω]:Communication line ($\overline{SCKp}$, SOp) pull-up resistance,
C_b[F]: Communication line (SOp, $\overline{SCKp}$) load capacitance, V_b[V]: Communication line voltage
4. V_{IH} and V_{IL} below are observation points for the AC characteristics of the serial array unit when communicating at different potentials in CSI mode.
4.0 V ≤ V_{DD} ≤ 5.5 V, 2.7 V ≤ V_b ≤ 4.0 V: V_{IH} = 2.2 V, V_{IL} = 0.8 V
2.7 V ≤ V_{DD} ≤ 4.0 V, 2.3 V ≤ V_b ≤ 2.7 V: V_{IH} = 2.0 V, V_{IL} = 0.5 V

Caution The pins mounted depend on the product. Refer to Caution 2 at the beginning of this chapter.

(2) Serial interface: Serial array unit (12/17)

CSI mode serial transfer timing (communication at different potential)
(When DAP0n = 0 and CKP0n = 0, or DAP0n = 1 and CKP0n = 1.)

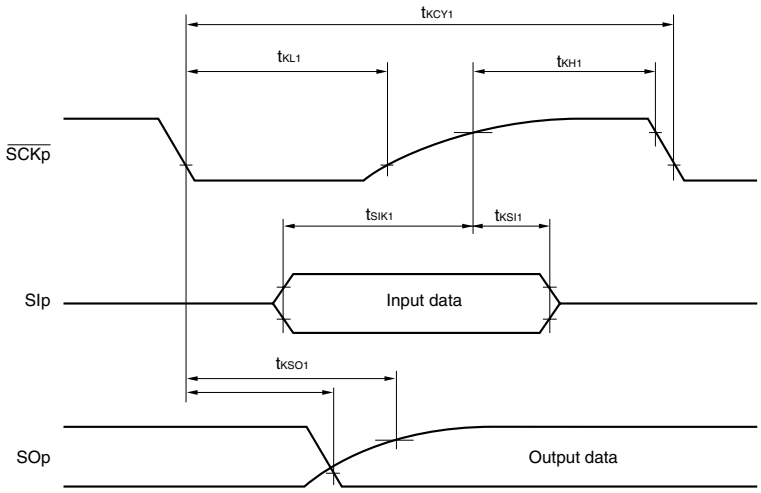

CSI mode serial transfer timing (communication at different potential)
(When DAP0n = 0 and CKP0n = 1, or DAP0n = 1 and CKP0n = 0.)

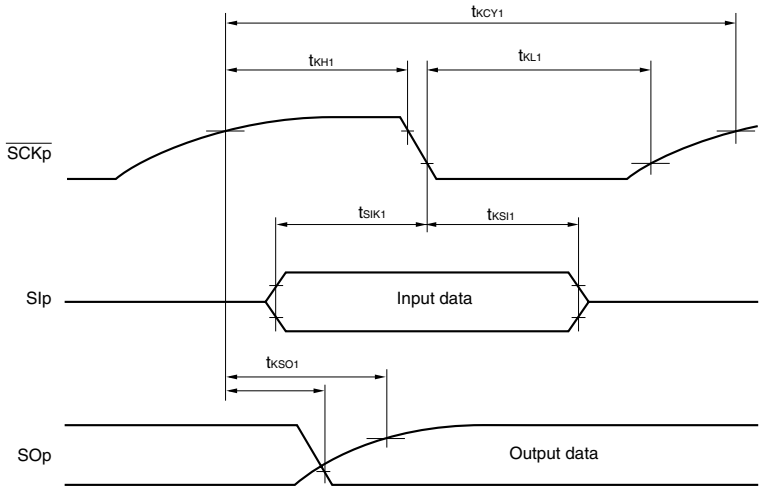

Caution Select the TTL input buffer for SIp and the N-ch open drain output (V_{DD} tolerance) mode for SOp and $\overline{\text{SCKp}}$ by using the PIMg and POMg registers.

Remarks 1. p: CSI number (p = 00, 01, 10),
g: PIM and POM number (g = 3, 7)
2. n: Channel number (n = 0 to 2)

Caution The pins mounted depend on the product. Refer to Caution 2 at the beginning of this chapter.

(2) Serial interface: Serial array unit (13/17)

(T_A = –40 to +85°C, 2.7 V ≤ V_{DD} = EV_{DD} ≤ 5.5 V, V_{SS} = EV_{SS} = AV_{SS} = 0 V)

(g) Communication at different potential (2.5 V, 3 V) (CSI mode) (slave mode, $\overline{SCKp}$... external clock input)

Parameter	Symbol	Conditions		MIN.	TYP.	MAX.	Unit
$\overline{SCKp}$ cycle time	t_{KCY2}	4.0 V ≤ V_{DD} ≤ 5.5 V, 2.7 V ≤ V_b ≤ 4.0 V	13.6 MHz < f_{MCK}	10/f_{MCK}			ns
			6.8 MHz < f_{MCK} ≤ 13.6 MHz	8/f_{MCK}			ns
			f_{MCK} ≤ 6.8 MHz	6/f_{MCK}			ns
		2.7 V ≤ V_{DD} < 4.0 V, 2.3 V ≤ V_b ≤ 2.7 V	18.5 MHz < f_{MCK}	16/f_{MCK}			ns
			14.8 MHz < f_{MCK} ≤ 18.5 MHz	14/f_{MCK}			ns
			11.1 MHz < f_{MCK} ≤ 14.8 MHz	12/f_{MCK}			ns
			7.4 MHz < f_{MCK} ≤ 11.1 MHz	10/f_{MCK}			ns
			3.7 MHz < f_{MCK} ≤ 7.4 MHz	8/f_{MCK}			ns
			f_{MCK} ≤ 3.7 MHz	6/f_{MCK}			ns
$\overline{SCKp}$ high-/low-level width	t_{KH2}, t_{KL2}	4.0 V ≤ V_{DD} ≤ 5.5 V, 2.7 V ≤ V_b ≤ 4.0 V		t_{KCY2}/2 – 20			ns
		2.7 V ≤ V_{DD} < 4.0 V, 2.3 V ≤ V_b ≤ 2.7 V		t_{KCY2}/2 – 35			ns
SIp setup time (to $\overline{SCKp}$↑) Note 1	t_{SIK2}			90			ns
SIp hold time (from $\overline{SCKp}$↑) Note 2	t_{KSI2}			1/f_{MCK} + 50			ns
Delay time from $\overline{SCKp}$↓ to SOp output Note 3	t_{KSO2}	4.0 V ≤ V_{DD} ≤ 5.5 V, 2.7 V ≤ V_b ≤ 4.0 V, C_b = 30 pF, R_b = 1.4 kΩ				2/f_{MCK} + 120	ns
		2.7 V ≤ V_{DD} < 4.0 V, 2.3 V ≤ V_b ≤ 2.7 V, C_b = 30 pF, R_b = 2.7 kΩ				2/f_{MCK} + 230	ns

Notes 1. When DAP0n = 0 and CKP0n = 0, or DAP0n = 1 and CKP0n = 1. The SIp setup time becomes "to $\overline{SCKp}$↓" when DAP0n = 0 and CKP0n = 1, or DAP0n = 1 and CKP0n = 0.

2. When DAP0n = 0 and CKP0n = 0, or DAP0n = 1 and CKP0n = 1. The SIp hold time becomes "from $\overline{SCKp}$↓" when DAP0n = 0 and CKP0n = 1, or DAP0n = 1 and CKP0n = 0.

3. When DAP0n = 0 and CKP0n = 0, or DAP0n = 1 and CKP0n = 1. The delay time to SOp output becomes "from $\overline{SCKp}$↑" when DAP0n = 0 and CKP0n = 1, or DAP0n = 1 and CKP0n = 0.

CSI mode connection diagram (communication at different potential)

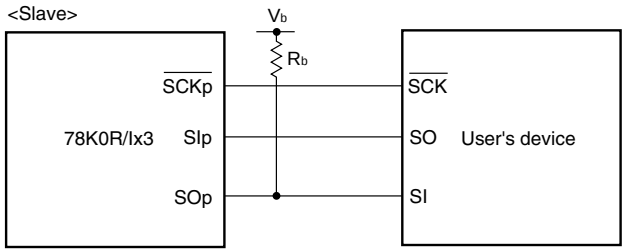

(Caution and Remark are given on the next page.)

Caution The pins mounted depend on the product. Refer to Caution 2 at the beginning of this chapter.

(2) Serial interface: Serial array unit (14/17)

Caution Select the TTL input buffer for SIp and $\overline{\text{SCKp}}$ and the N-ch open drain output (V_{DD} tolerance) mode for SOp by using the PIMg and POMg registers.

Remarks 1. p: CSI number (p = 00, 01, 10),
g: PIM and POM number (g = 3, 7)

2. R_b[Ω]:Communication line (SOp) pull-up resistance,
C_b[F]: Communication line (SOp) load capacitance, V_b[V]: Communication line voltage

3. f_{MCK}: Serial array unit operation clock frequency
(Operation clock to be set by the CKS0n bit of the SMR0n register. n: Channel number (n = 0 to 2))

4. V_{IH} and V_{IL} below are observation points for the AC characteristics of the serial array unit when communicating at different potentials in CSI mode.
4.0 V ≤ V_{DD} ≤ 5.5 V, 2.7 V ≤ V_b ≤ 4.0 V: V_{IH} = 2.2 V, V_{IL} = 0.8 V
2.7 V ≤ V_{DD} ≤ 4.0 V, 2.3 V ≤ V_b ≤ 2.7 V: V_{IH} = 2.0 V, V_{IL} = 0.5 V

Caution The pins mounted depend on the product. Refer to Caution 2 at the beginning of this chapter.

(2) Serial interface: Serial array unit (15/17)

CSI mode serial transfer timing (communication at different potential)
(When DAP0n = 0 and CKP0n = 0, or DAP0n = 1 and CKP0n = 1.)

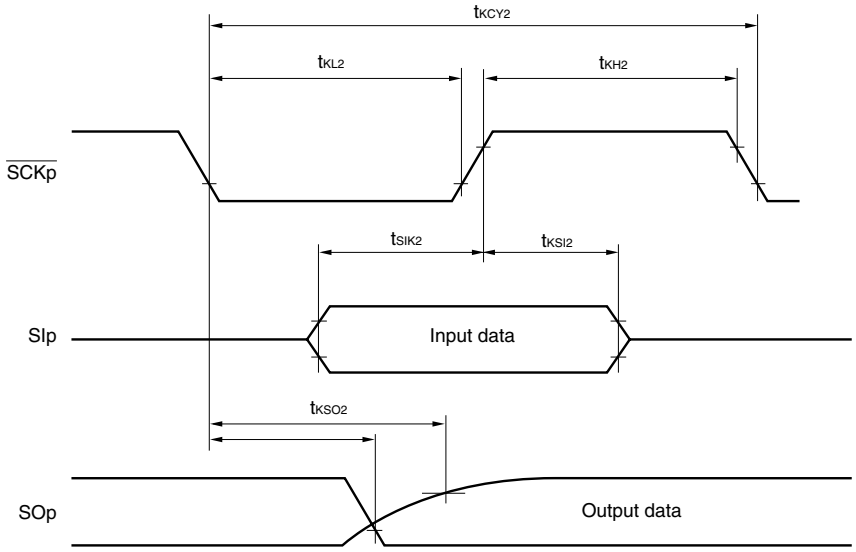

CSI mode serial transfer timing (communication at different potential)
(When DAP0n = 0 and CKP0n = 1, or DAP0n = 1 and CKP0n = 0.)

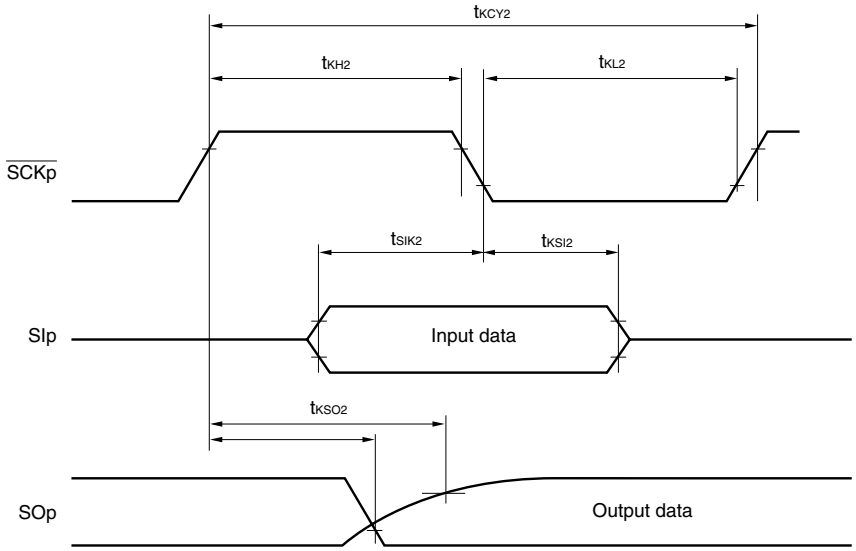

Caution Select the TTL input buffer for SIp and $\overline{\text{SCKp}}$ and the N-ch open drain output (V_{DD} tolerance) mode for SOp by using the PIMg and POMg registers.

Remarks 1. p: CSI number (p = 00, 01, 10),
g: PIM and POM number (g = 3, 7)

2. n: Channel number (n = 0 to 2)

Caution The pins mounted depend on the product. Refer to Caution 2 at the beginning of this chapter.

(2) Serial interface: Serial array unit (16/17)

(T_A = –40 to +85°C, 2.7 V ≤ V_{DD} = EV_{DD} ≤ 5.5 V, V_{SS} = EV_{SS} = AV_{SS} = 0 V)

(h) Communication at different potential (2.5 V, 3 V) (simplified I^2C mode)

Parameter	Symbol	Conditions	MIN.	MAX.	Unit
SCL10 clock frequency	f_{SCL}	4.0 V ≤ V_{DD} ≤ 5.5 V, 2.7 V ≤ V_b ≤ 4.0 V, C_b = 100 pF, R_b = 1.4 kΩ		400	kHz
		2.7 V ≤ V_{DD} ≤ 4.0 V, 2.3 V ≤ V_b ≤ 2.7 V, C_b = 100 pF, R_b = 2.7 kΩ		400	kHz
Hold time when SCL10 = "L"	t_{LOW}	4.0 V ≤ V_{DD} ≤ 5.5 V, 2.7 V ≤ V_b ≤ 4.0 V, C_b = 100 pF, R_b = 1.4 kΩ	1275		ns
		2.7 V ≤ V_{DD} ≤ 4.0 V, 2.3 V ≤ V_b ≤ 2.7 V, C_b = 100 pF, R_b = 2.7 kΩ	1275		ns
Hold time when SCL10 = "H"	t_{HIGH}	4.0 V ≤ V_{DD} ≤ 5.5 V, 2.7 V ≤ V_b ≤ 4.0 V, C_b = 100 pF, R_b = 1.4 kΩ	655		ns
		2.7 V ≤ V_{DD} ≤ 4.0 V, 2.3 V ≤ V_b ≤ 2.7 V, C_b = 100 pF, R_b = 2.7 kΩ	655		ns
Data setup time (reception)	$t_{SU:DAT}$	4.0 V ≤ V_{DD} ≤ 5.5 V, 2.7 V ≤ V_b ≤ 4.0 V, C_b = 100 pF, R_b = 1.4 kΩ	$1/f_{MCK}$ + 190		ns
		2.7 V ≤ V_{DD} ≤ 4.0 V, 2.3 V ≤ V_b ≤ 2.7 V, C_b = 100 pF, R_b = 2.7 kΩ	$1/f_{MCK}$ + 190		ns
Data hold time (transmission)	$t_{HD:DAT}$	4.0 V ≤ V_{DD} ≤ 5.5 V, 2.7 V ≤ V_b ≤ 4.0 V, C_b = 100 pF, R_b = 1.4 kΩ	0	640	ns
		2.7 V ≤ V_{DD} ≤ 4.0 V, 2.3 V ≤ V_b ≤ 2.7 V, C_b = 100 pF, R_b = 2.7 kΩ	0	660	ns

Caution Select the TTL input buffer and the N-ch open drain output (V_{DD} tolerance) mode for SDA10 and the N-ch open drain output (V_{DD} tolerance) mode for SCL10 by using the PIM3 and POM3 registers.

Remarks 1. R_b[Ω]:Communication line (SDA10, SCL10) pull-up resistance,
C_b[F]: Communication line (SDA10, SCL10) load capacitance, V_b[V]: Communication line voltage

2. f_{MCK}: Serial array unit operation clock frequency
(Operation clock to be set by the CKS02 bit of the SMR02 register.)

3. V_{IH} and V_{IL} below are observation points for the AC characteristics of the serial array unit when communicating at different potentials in simplified I^2C mode mode.
4.0 V ≤ V_{DD} ≤ 5.5 V, 2.7 V ≤ V_b ≤ 4.0 V: V_{IH} = 2.2 V, V_{IL} = 0.8 V
2.7 V ≤ V_{DD} ≤ 4.0 V, 2.3 V ≤ V_b ≤ 2.7 V: V_{IH} = 2.0 V, V_{IL} = 0.5 V

Caution The pins mounted depend on the product. Refer to Caution 2 at the beginning of this chapter.

(2) Serial interface: Serial array unit (17/17)

Simplified I²C mode connection diagram (communication at different potential)

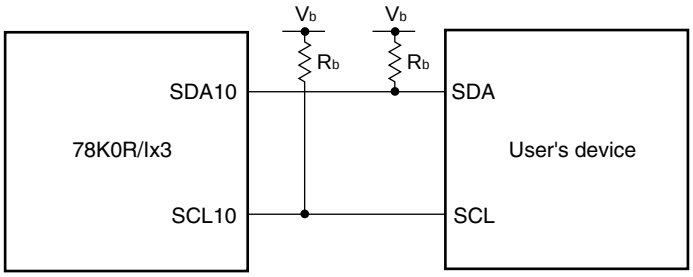

Simplified I²C mode serial transfer timing (communication at different potential)

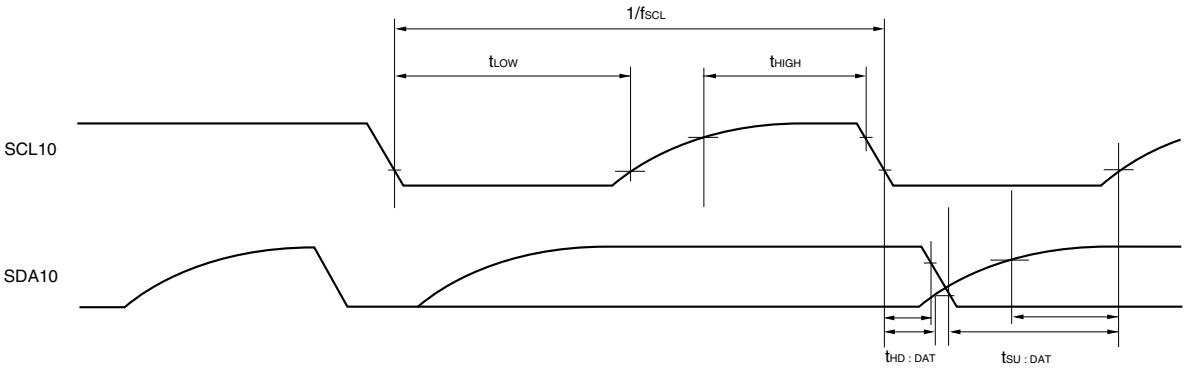

Caution Select the TTL input buffer and the N-ch open drain output (V_{DD} tolerance) mode for SDA10 and the N-ch open drain output (V_{DD} tolerance) mode for SCL10 by using the PIM3 and POM3 registers.

Remark R_b[Ω]:Communication line (SDA10, SCL10) pull-up resistance, V_b[V]: Communication line voltage

Caution The pins mounted depend on the product. Refer to Caution 2 at the beginning of this chapter.

(3) Serial interface: IICA

(T_A = –40 to +85°C, 2.7 V ≤ V_{DD} = EV_{DD} ≤ 5.5 V, V_{SS} = EV_{SS} = AV_{SS} = 0 V)

(a) IICA

Parameter	Symbol	Conditions	Standard Mode		High-Speed Mode		Unit
			MIN.	MAX.	MIN.	MAX.	
SCL0 clock frequency	f_{SCL}	High speed mode: f_{CLK} ≥ 3.5 MHz Normal mode: f_{CLK} ≥ 1 MHz	0	100	0	400	kHz
Setup time of restart condition[Note 1]	$t_{SU:STA}$		4.7		0.6		μs
Hold time	$t_{HD:STA}$		4.0		0.6		μs
Hold time when SCL0 = "L"	t_{LOW}		4.7		1.3		μs
Hold time when SCL0 = "H"	t_{HIGH}		4.0		0.6		μs
Data setup time (reception)	$t_{SU:DAT}$		250		100		ns
Data hold time (transmission)[Note 2]	$t_{HD:DAT}$		0	3.45	0	0.9	μs
Setup time of stop condition	$t_{SU:STO}$		4.0		0.6		μs
Bus-free time	t_{BUF}		4.7		1.3		μs

Notes 1. The first clock pulse is generated after this period when the start/restart condition is detected.

2. The maximum value (MAX.) of $t_{HD:DAT}$ is during normal transfer and a wait state is inserted in the $\overline{ACK}$ (acknowledge) timing.

IICA serial transfer timing

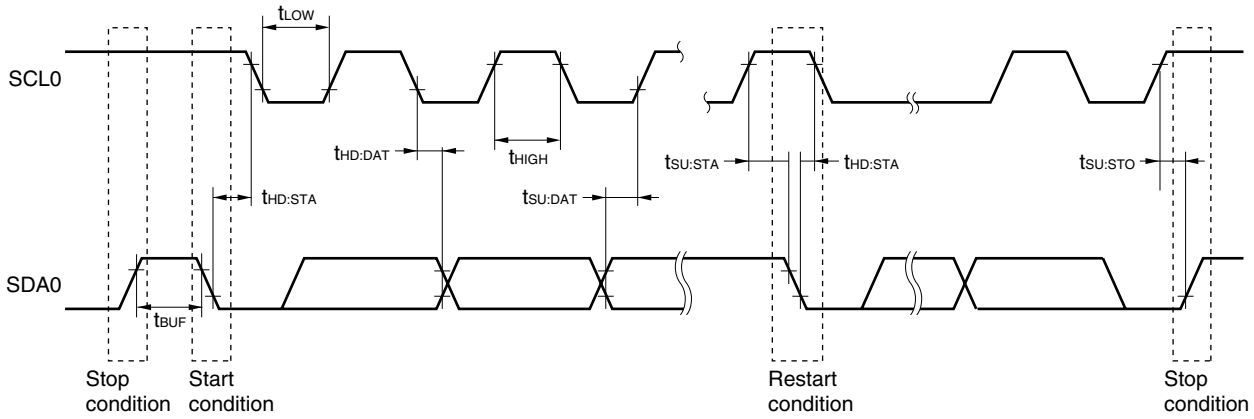

Caution The pins mounted depend on the product. Refer to Caution 2 at the beginning of this chapter.

(4) Serial interface: On-chip debug (UART)

(T_A = –40 to +85°C, 2.7 V ≤ V_{DD} = EV_{DD} ≤ 5.5 V, V_{SS} = EV_{SS} = AV_{SS} = 0 V)

(a) On-chip debug (UART)

Parameter	Symbol	Conditions	MIN.	TYP.	MAX.	Unit
Transfer rate			$f_{CLK}/2^{12}$		$f_{CLK}/6$	bps
		Flash memory programming mode			3.33	Mbps
TOOL1 output frequency	f_{TOOL1}	2.7 V ≤ V_{DD} ≤ 5.5 V			10	MHz

Caution The pins mounted depend on the product. Refer to Caution 2 at the beginning of this chapter.

A/D Converter Characteristics

(T_A = –40 to +85°C, 2.7 V ≤ V_{DD} = EV_{DD} = ≤ 5.5 V, 2.7 V ≤ AV_{REF} ≤ V_{DD}, V_{SS} = EV_{SS} = AV_{SS} = 0 V)

Parameter	Symbol	Conditions		MIN.	TYP.	MAX.	Unit
Resolution	R_{ES}					10	bit
Overall error[Notes 1, 2]	AINL					±0.35	%FSR
Conversion time	t_{CONV}	4.0 V ≤ AV_{REF} ≤ 5.5 V	High speed mode 1	2.5		66.6	μs
			Normal mode	5.2		66.6	μs
		2.7 V ≤ AV_{REF} < 5.5 V	High speed mode 2	3.5		66.6	μs
			Normal mode	8.6		66.6	μs
Zero-scale error[Notes 1, 2]	EZS					±0.25	%FSR
Full-scale error[Notes 1, 2]	EFS					±0.25	%FSR
Integral non-linearity error[Note 1]	ILE					±2.5	LSB
Differential non-linearity error[Note 1]	DLE					±1.5	LSB
Analog input voltage	V_{AIN}	2.7 V ≤ AV_{REF} ≤ 5.5 V		AV_{SS}		AV_{REF}	V

Notes 1. Excludes quantization error (±1/2 LSB).

2. This value is indicated as a ratio (%FSR) to the full-scale value.

Programming gain amplifier characteristics

(T_A = –40 to +85°C, 2.7 V ≤ V_{DD} ≤ 5.5 V, 2.7 V ≤ AV_{REF} ≤ V_{DD}, V_{SS} = AV_{SS} = 0 V)

Parameter	Symbol	Conditions		MIN.	TYP.	MAX.	Unit
Input offset voltage	VIO_{AMP}				±5	±10	mV
Input voltage range	VI_{AMP}			0.1AV_{REF} /gain		0.9AV_{REF} /gain	V
Maximum output voltage	VO_{AMP}			0.1AV_{REF}		0.9AV_{REF}	V
Slew rate	SR_F	Rising edge	4.0 V ≤ AV_{REF} ≤ 5.5 V	3.5			V/μs
			2.7 V ≤ AV_{REF} < 4.0 V	2			V/μs
	SR_R	Falling edge	4.0 V ≤ AV_{REF} ≤ 5.5 V	4			V/μs
			2.7 V ≤ AV_{REF} < 4.0 V	2.5			V/μs
Gain	RG			4 to 12			times
Operation stabilization wait time	t_{AMP}					3	μs

Remark Slew rate: The change with respect to the rise or fall of the output voltage

V/μs: The change in voltage per 1 μs

Operation stabilization wait time: Time required until a state is entered where the DC and AC specifications of the programming gain amplifier are satisfied after the operation of the programming gain amplifier has been enabled (OAEN = 1)

Caution The pins mounted depend on the product. Refer to Caution 2 at the beginning of this chapter.

Comparator characteristics

(T_A = –40 to +85°C, 2.7 V ≤ V_{DD} ≤ 5.5 V, 2.7 V ≤ AV_{REF} ≤ V_{DD}, V_{SS} = AV_{SS} = 0 V)

Parameter	Symbol	Conditions	MIN.	TYP.	MAX.	Unit
Input offset voltage	VIO_{CMP}			±5	±40	mV
Input voltage range	VI_{CMP}		$0.1AV_{REF}$		$0.9AV_{REF}$	V
Internal reference voltage deviation	ΔV_{IREF}			2.5	10	%
Response time	t_{CR}	Input amplitude = ±100 mV, at rising edge Note 1		150	300	ns
	t_{CF}	Input amplitude = ±100 mV, at falling edge Note 2		150	300	ns
Operation stabilization wait time	t_{CMP}				1	μs
Reference voltage stabilization wait time	t_{VR}				1	μs

Notes 1. Characteristics of pulse response when CMP0P and CMP1P input or programming gain amplifier output changes from the comparator reference voltage –100 mV to the comparator reference voltage +100 mV.

2. Characteristics of pulse response when CMP0P and CMP1P input or programming gain amplifier output changes from the comparator reference voltage +100 mV to the comparator reference voltage –100 mV.

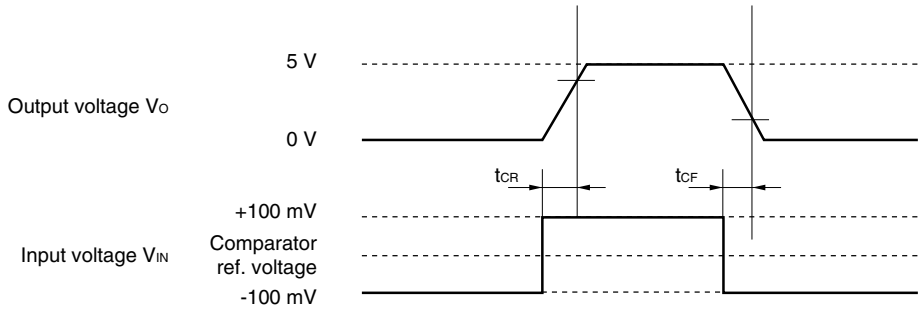

Remarks 1. Operation stabilization wait time: Time required until a state is entered where the DC and AC specifications of the comparator are satisfied after the operation of the comparator has been enabled (CnEN = 1)

Reference voltage stabilization wait time:

Time required until the voltage level of the internal reference voltage circuit reaches 99% of the ideal value after the internal reference voltage has been enabled (CnVRE = 1)

2. n = 0, 1

Caution The pins mounted depend on the product. Refer to Caution 2 at the beginning of this chapter.

POC Circuit Characteristics (T_A = –40 to +85°C, V_{SS} = 0 V)

Parameter	Symbol	Conditions	MIN.	TYP.	MAX.	Unit
Detection voltage	V_{POR}	Power supply rise time	1.52	1.61	1.70	V
	V_{PDR}	Power supply fall time	1.5	1.59	1.68	V
Power supply voltage rise inclination	t_{PTH}	Change inclination of V_{DD}: 0 V → V_{POR}	0.5			V/ms
Minimum pulse width	t_{PW}	When the voltage drops	200			μs
Detection delay time					200	μs

POC Circuit Timing

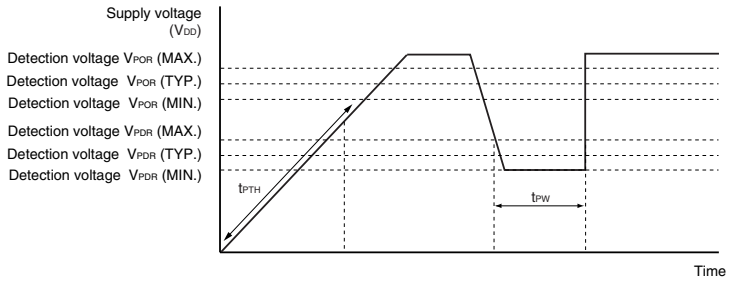

Supply Voltage Rise Time (T_A = –40 to +85°C, V_{SS} = 0 V)

Parameter	Symbol	Conditions	MIN.	TYP.	MAX.	Unit
Maximum time to rise to 2.7 V (V_{DD} (MIN.)) Note (VDD: 0 V → 2.7 V)	t_{PUP1}	when $\overline{\text{RESET}}$ input is not used			3.6	ms
Maximum time to rise to 2.7 V (V_{DD} (MIN.)) Note (releasing $\overline{\text{RESET}}$ input → V_{DD}: 2.7 V)	t_{PUP2}	when $\overline{\text{RESET}}$ input is used			1.88	ms

Note Make sure to raise the power supply in a shorter time than this.

Supply Voltage Rise Time Timing

- When $\overline{\text{RESET}}$ pin input is not used

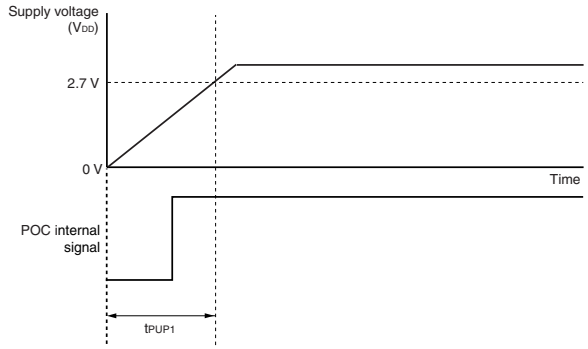

- When $\overline{\text{RESET}}$ pin input is used (when external reset is released by the $\overline{\text{RESET}}$ pin, after POC has been released)

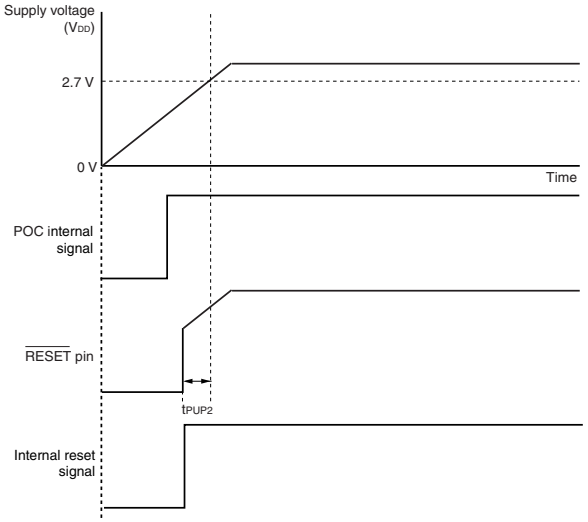

Caution The pins mounted depend on the product. Refer to Caution 2 at the beginning of this chapter.

LVI Circuit Characteristics (T_A = –40 to +85°C, $V_{PDR} \le V_{DD} = EV_{DD} \le 5.5$ V, $V_{SS} = EV_{SS} = AV_{SS} = 0$ V)

Parameter		Symbol	Conditions	MIN.	TYP.	MAX.	Unit
Detection voltage	Supply voltage level	V_{LVI0}		4.12	4.22	4.32	V
		V_{LVI1}		3.97	4.07	4.17	V
		V_{LVI2}		3.82	3.92	4.02	V
		V_{LVI3}		3.66	3.76	3.86	V
		V_{LVI4}		3.51	3.61	3.71	V
		V_{LVI5}		3.35	3.45	3.55	V
		V_{LVI6}		3.20	3.30	3.40	V
		V_{LVI7}		3.05	3.15	3.25	V
		V_{LVI8}		2.89	2.99	3.09	V
		V_{LVI9}		2.74	2.84	2.94	V
	External input pin[Note 1]	V_{EXLVI}	EXLVI < V_{DD}, 2.7 V ≤ V_{DD} ≤ 5.5 V	1.11	1.21	1.31	V
Minimum pulse width		t_{LW}		200			μs
Detection delay time						200	μs
Operation stabilization wait time[Note 2]		t_{LWAIT}				10	μs

Notes 1. The EXLVI/P120/INTP0 pin is used.

2. Time required from setting bit 7 (LVION) of the low-voltage detection register (LVIM) to 1 to operation stabilization

Remark $V_{LVI(n-1)} > V_{LVIn}$: n = 1 to 9

LVI Circuit Timing

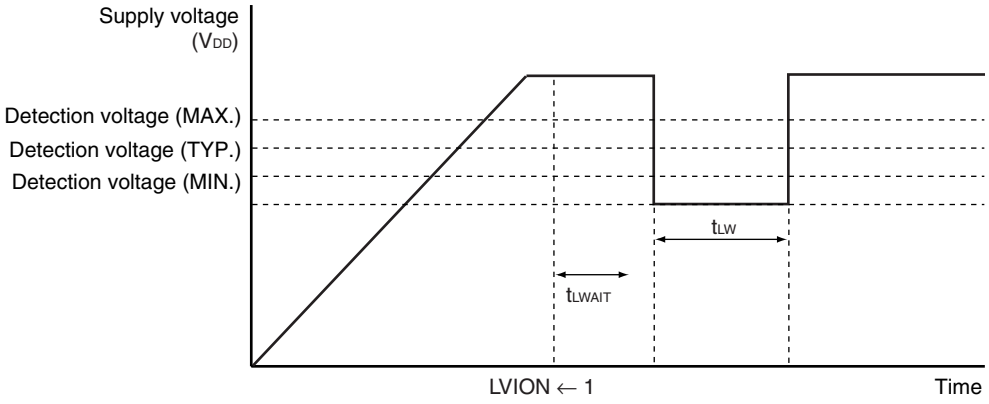

Caution The pins mounted depend on the product. Refer to Caution 2 at the beginning of this chapter.

Data Memory STOP Mode Low Supply Voltage Data Retention Characteristics (T_A = –40 to +85°C)

Parameter	Symbol	Conditions	MIN.	TYP.	MAX.	Unit
Data retention supply voltage	V_{DDDR}		1.5 Note		5.5	V

Note The value depends on the POC detection voltage. When the voltage drops, the data is retained until a POC reset is effected, but data is not retained when a POC reset is effected.

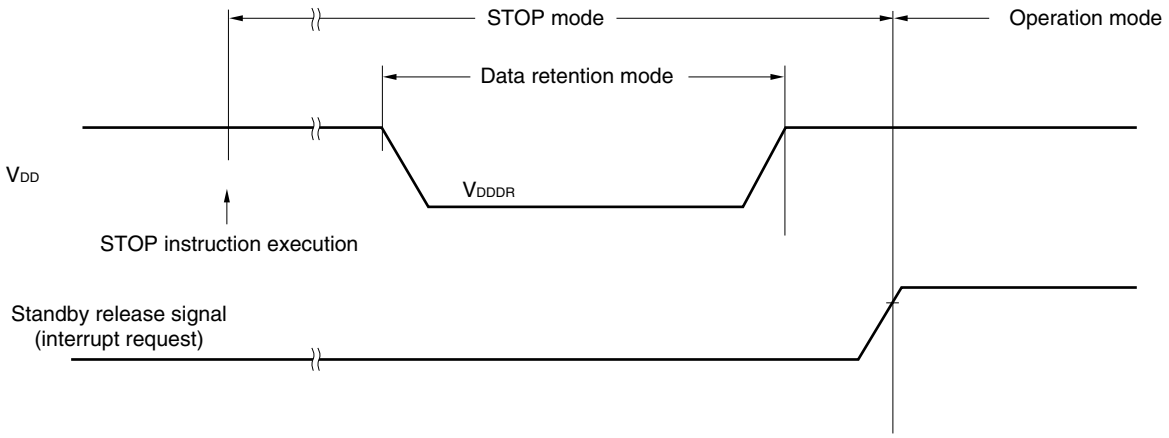

Flash Memory Programming Characteristics

(T_A = –40 to +85°C, 2.7 V ≤ V_{DD} = EV_{DD0} ≤ 5.5 V, V_{SS} = EV_{SS} = AV_{SS} = 0 V)

Parameter	Symbol	Conditions		MIN.	TYP.	MAX.	Unit
V_{DD} supply current	I_{DD}	Typ. = 10 MHz, Max. = 20 MHz			6	20	mA
Number of rewrites (number of deletes per block)	C_{erwr}	Used for updating programs When using flash memory programmer and NEC Electronics self programming library	Retained for 15 years	1,000			Times
		Used for updating data When using NEC Electronics EEPROM emulation library	Retained for 5 years	10,000			Times

Remark When updating data multiple times, use the flash memory as one for updating data.

29.1 78K0R/IB3

μPD78F1201MC-CAB-AX, 78F1203MC-CAB-AX

30-PIN PLASTIC SSOP (7.62mm (300))

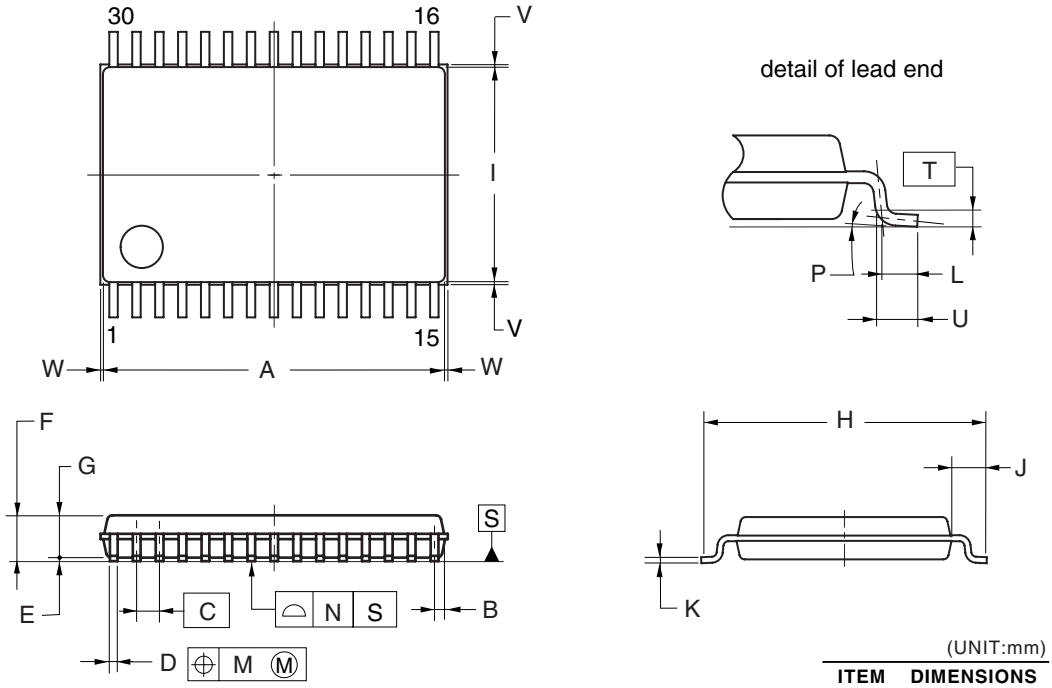

(UNIT:mm)

ITEM	DIMENSIONS
A	9.70±0.10
B	0.30
C	0.65 (T.P.)
D	$0.22^{+0.10}_{-0.05}$
E	0.10±0.05
F	1.30±0.10
G	1.20
H	8.10±0.20
I	6.10±0.10
J	1.00±0.20
K	$0.15^{+0.05}_{-0.01}$
L	0.50
M	0.13
N	0.10
P	$3^{\circ}{}^{+5^{\circ}}_{-3^{\circ}}$
T	0.25(T.P.)
U	0.60±0.15
V	0.25 MAX.
W	0.15 MAX.

P30MC-65-CAB

NOTE

Each lead centerline is located within 0.13 mm of its true position (T.P.) at maximum material condition.

© NEC Electronics Corporation 2005

29.2 78K0R/IC3

μPD78F1211MC-GAA-AX, 78F1213MC-GAA-AX

38-PIN PLASTIC SSOP (7.62mm (300))

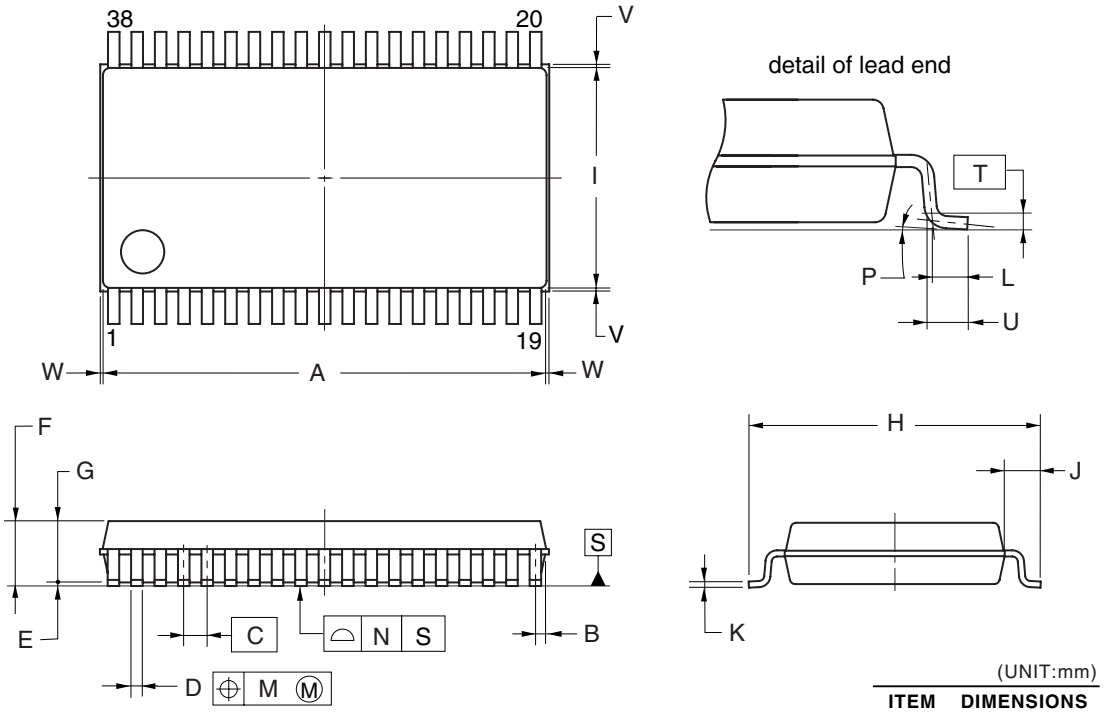

(UNIT:mm)

ITEM	DIMENSIONS
A	12.30±0.10
B	0.30
C	0.65 (T.P.)
D	$0.30^{+0.10}_{-0.05}$
E	0.125±0.075
F	2.00 MAX.
G	1.70±0.10
H	8.10±0.20
I	6.10±0.10
J	1.00±0.20
K	$0.15^{+0.10}_{-0.05}$
L	0.50
M	0.10
N	0.10
P	$3^{\circ}{}^{+5^{\circ}}_{-3^{\circ}}$
T	0.25(T.P.)
U	0.60±0.15
V	0.25 MAX.
W	0.15 MAX.

P38MC-65-GAA

NOTE

Each lead centerline is located within 0.10 mm of its true position (T.P.) at maximum material condition.

© NEC Electronics Corporation 2005

μPD78F1211GB-GAF-AX, 78F1213GB-GAF-AX

44-PIN PLASTIC LQFP (10x10)

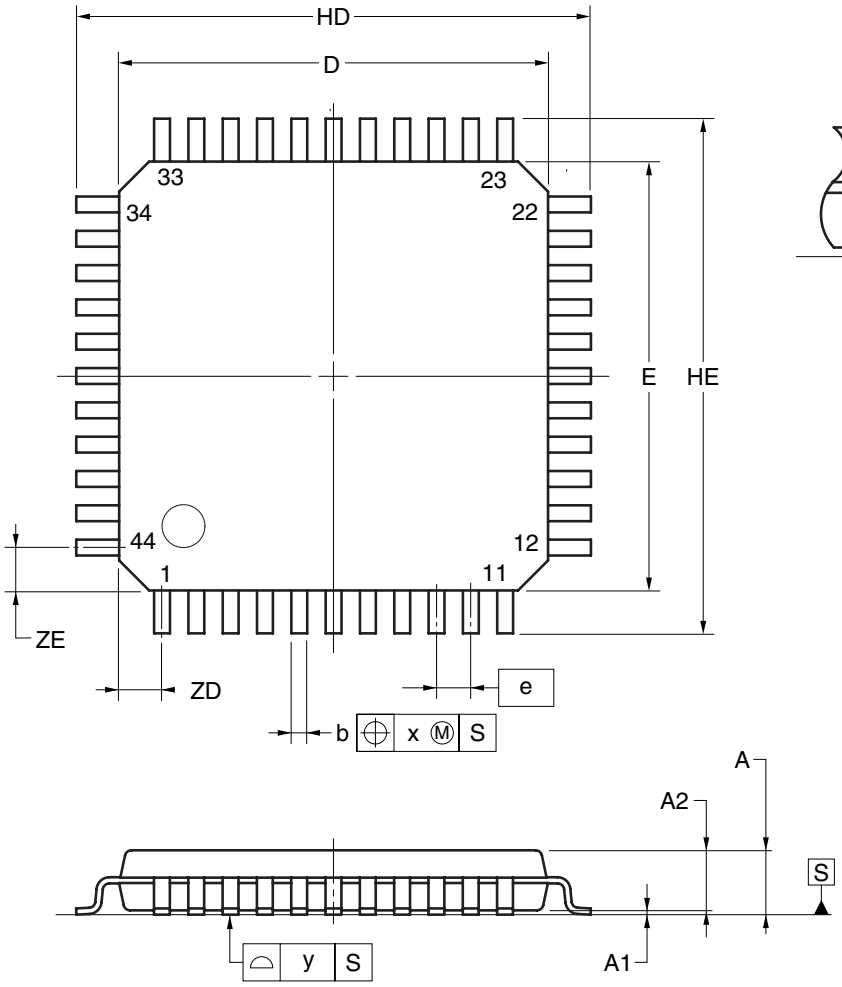

detail of lead end

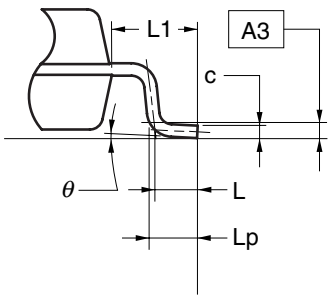

(UNIT:mm)

ITEM	DIMENSIONS
D	10.00±0.20
E	10.00±0.20
HD	12.00±0.20
HE	12.00±0.20
A	1.60 MAX.
A1	0.10±0.05
A2	1.40±0.05
A3	0.25
b	$0.35^{+0.08}_{-0.04}$
c	$0.125^{+0.075}_{-0.025}$
L	0.50
Lp	0.60±0.15
L1	1.00±0.20
θ	$3^{\circ}{}^{+5^{\circ}}_{-3^{\circ}}$
e	0.80
x	0.20
y	0.10
ZD	1.00
ZE	1.00

P44GB-80-GAF

NOTE
Each lead centerline is located within 0.20 mm of its true position at maximum material condition.

© NEC Electronics Corporation 2005

μPD78F1213GA-HAA-AX, 78F1214GA-HAA-AX, 78F1215GA-HAA-AX

48-PIN PLASTIC TQFP (FINE PITCH) (7x7)

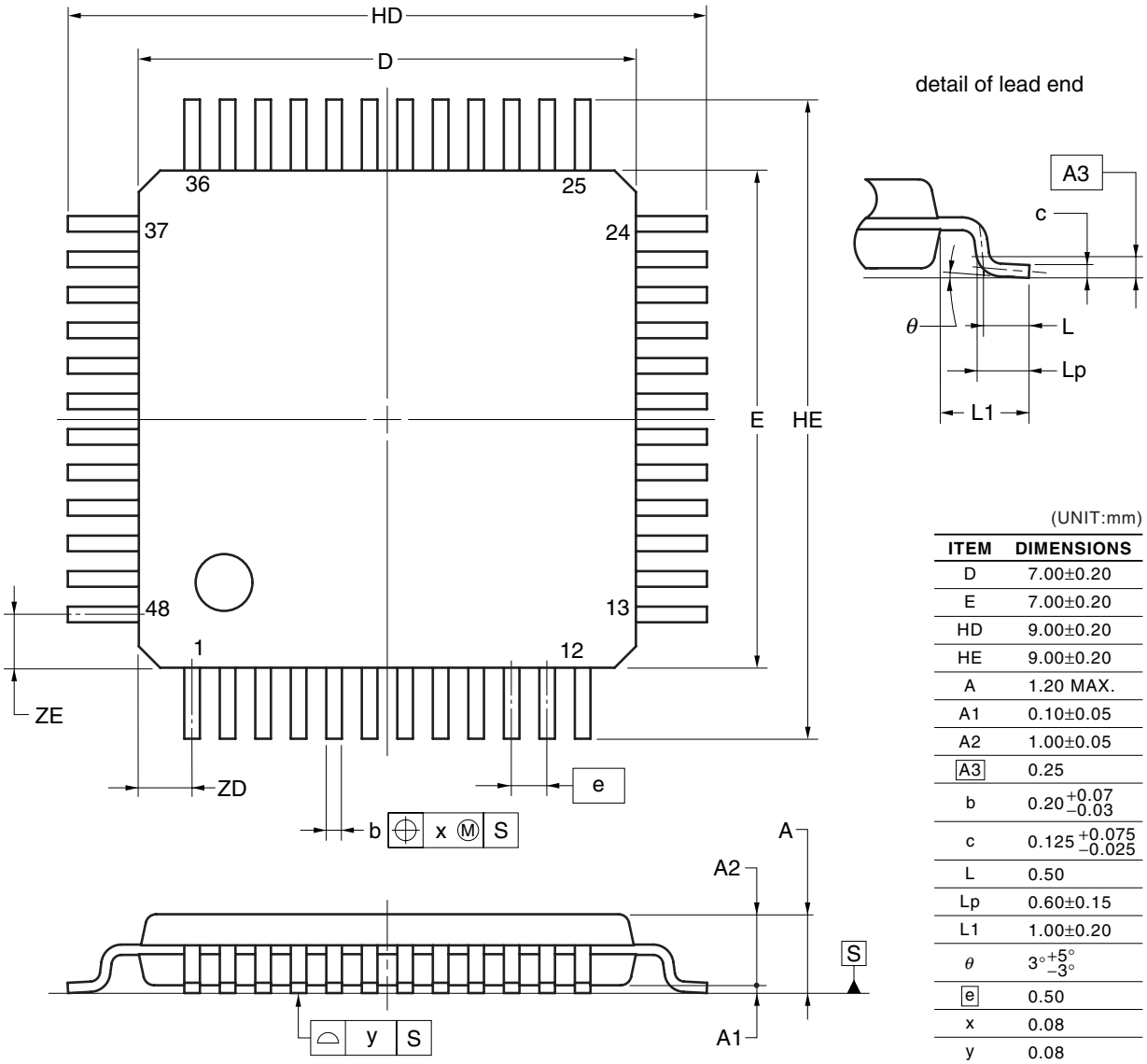

(UNIT:mm)

ITEM	DIMENSIONS
D	7.00±0.20
E	7.00±0.20
HD	9.00±0.20
HE	9.00±0.20
A	1.20 MAX.
A1	0.10±0.05
A2	1.00±0.05
A3	0.25
b	$0.20^{+0.07}_{-0.03}$
c	$0.125^{+0.075}_{-0.025}$
L	0.50
Lp	0.60±0.15
L1	1.00±0.20
θ	$3^{\circ}{}^{+5^{\circ}}_{-3^{\circ}}$
e	0.50
x	0.08
y	0.08
ZD	0.75
ZE	0.75

P48GA-50-HAA

NOTE
Each lead centerline is located within 0.08 mm of its true position at maximum material condition.

© NEC Electronics Corporation 2005

29.3 78K0R/ID3

μPD78F1223GB-GAG-AX, 78F1224GB-GAG-AX, 78F1225GB-GAG-AX

52-PIN PLASTIC LQFP (10x10)

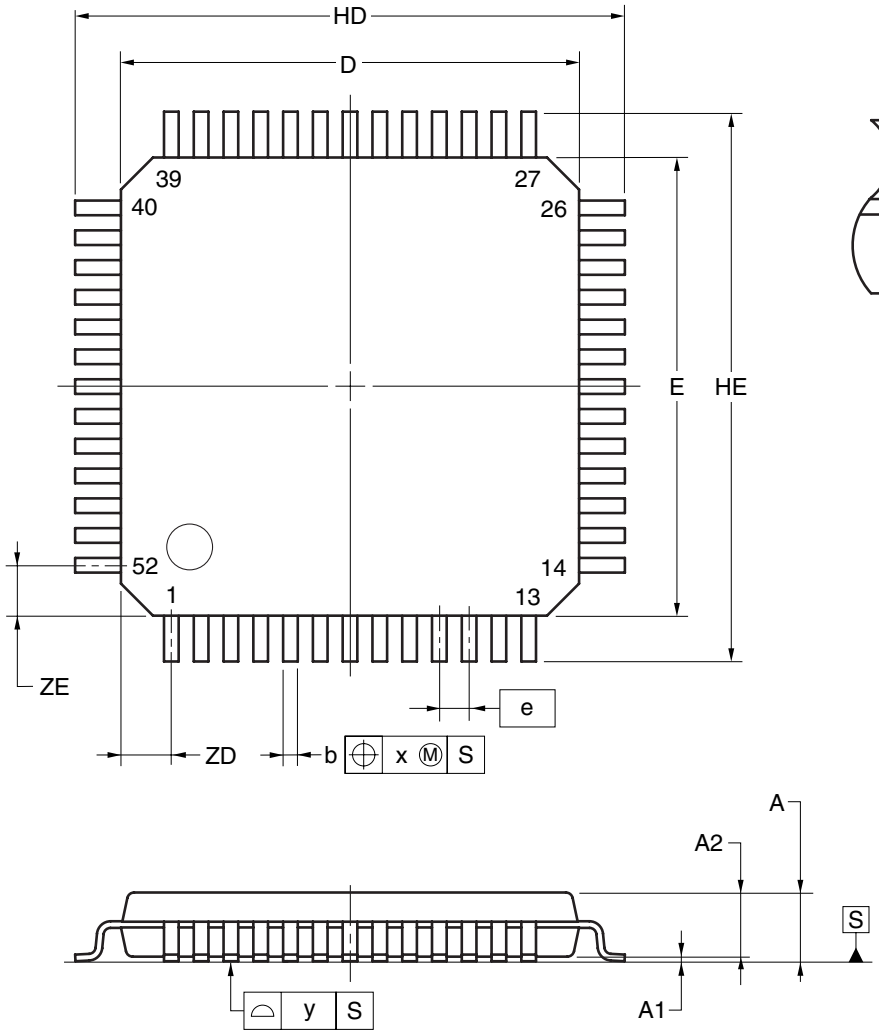

detail of lead end

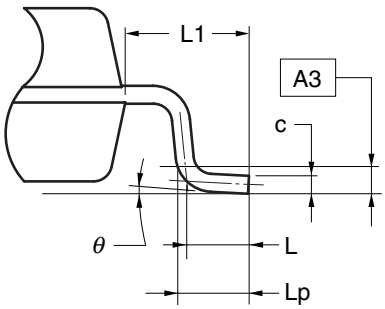

(UNIT:mm)

ITEM	DIMENSIONS
D	10.00±0.20
E	10.00±0.20
HD	12.00±0.20
HE	12.00±0.20
A	1.60 MAX.
A1	0.10±0.05
A2	1.40±0.05
A3	0.25
b	$0.30^{+0.08}_{-0.04}$
c	$0.125^{+0.075}_{-0.025}$
L	0.50
Lp	0.60±0.15
L1	1.00±0.20
θ	$3^{\circ}{}^{+5^{\circ}}_{-3^{\circ}}$
e	0.65
x	0.13
y	0.10
ZD	1.10
ZE	1.10

P52GB-65-GAG

NOTE
Each lead centerline is located within 0.13mm of its true position at maximum material condition.

© NEC Electronics Corporation 2005

29.4 78K0R/IE3

μPD78F1233GK-GAJ-AX, 78F1234GK-GAJ-AX, 78F1235GK-GAJ-AX

64-PIN PLASTIC LQFP (12x12)

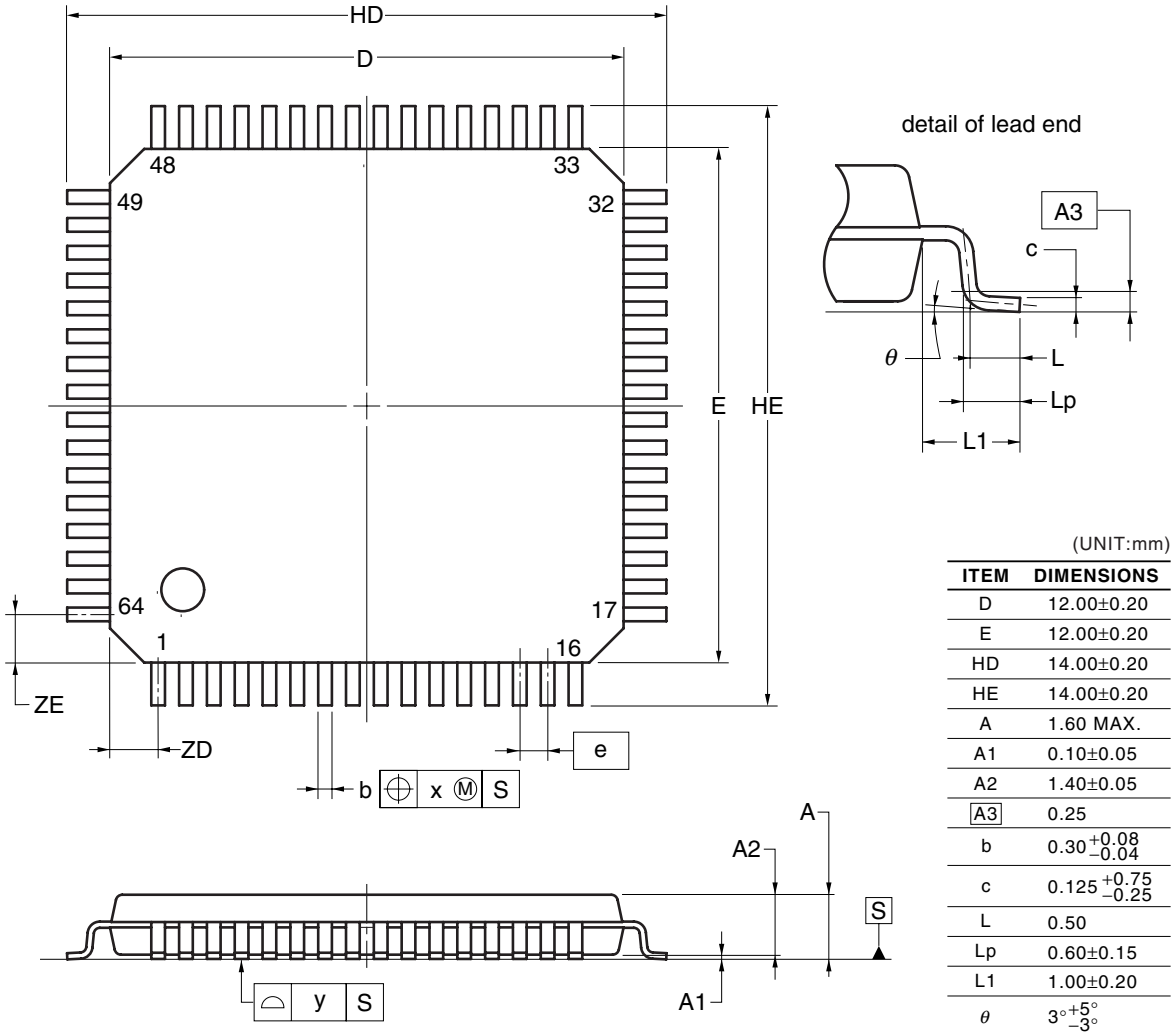

(UNIT:mm)

ITEM	DIMENSIONS
D	12.00±0.20
E	12.00±0.20
HD	14.00±0.20
HE	14.00±0.20
A	1.60 MAX.
A1	0.10±0.05
A2	1.40±0.05
A3	0.25
b	$0.30^{+0.08}_{-0.04}$
c	$0.125^{+0.75}_{-0.25}$
L	0.50
Lp	0.60±0.15
L1	1.00±0.20
θ	$3^{\circ}{}^{+5^{\circ}}_{-3^{\circ}}$
e	0.65
x	0.13
y	0.10
ZD	1.125
ZE	1.125

P64GK-65-GAJ

NOTE
Each lead centerline is located within 0.13 mm of its true position at maximum material condition.

© NEC Electronics Corporation 2005

μPD78F1233GB-GAH-AX, 78F1234GB-GAH-AX, 78F1235GB-GAH-AX

64-PIN PLASTIC LQFP(FINE PITCH)(10x10)

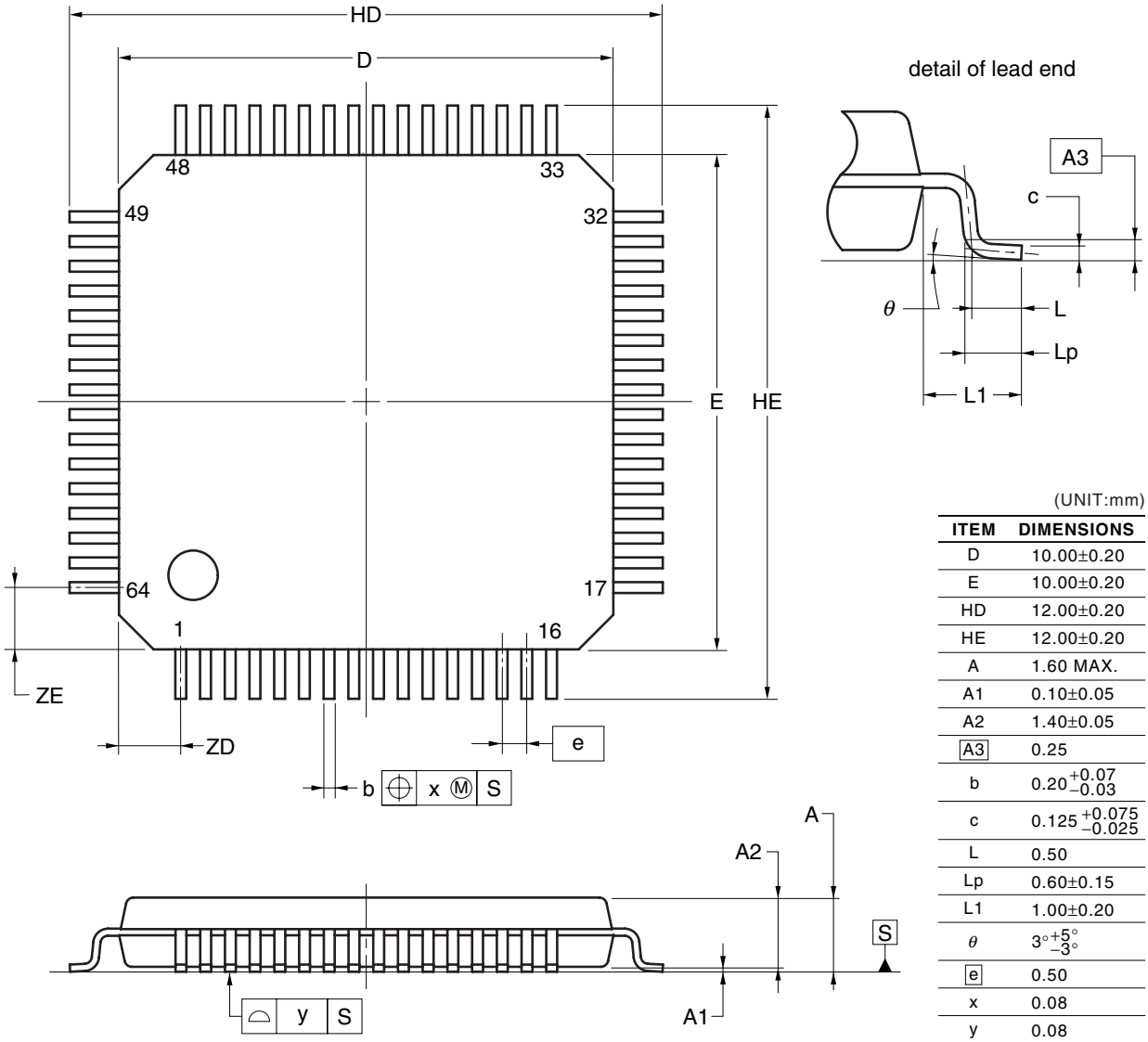

(UNIT:mm)

ITEM	DIMENSIONS
D	10.00±0.20
E	10.00±0.20
HD	12.00±0.20
HE	12.00±0.20
A	1.60 MAX.
A1	0.10±0.05
A2	1.40±0.05
A3	0.25
b	$0.20^{+0.07}_{-0.03}$
c	$0.125^{+0.075}_{-0.025}$
L	0.50
Lp	0.60±0.15
L1	1.00±0.20
θ	$3^{\circ}{}^{+5^{\circ}}_{-3^{\circ}}$
e	0.50
x	0.08
y	0.08
ZD	1.25
ZE	1.25

P64GB-50-GAH

NOTE
Each lead centerline is located within 0.08 mm of its true position at maximum material condition.

© NEC Electronics Corporation 2005

APPENDIX A DEVELOPMENT TOOLS

The following development tools are available for the development of systems that employ the 78K0R/Ix3. Figure A-1 shows the development tool configuration.

Figure A-1. Development Tool Configuration (1/2)

(1) When using the in-circuit emulator QB-78K0RIX3

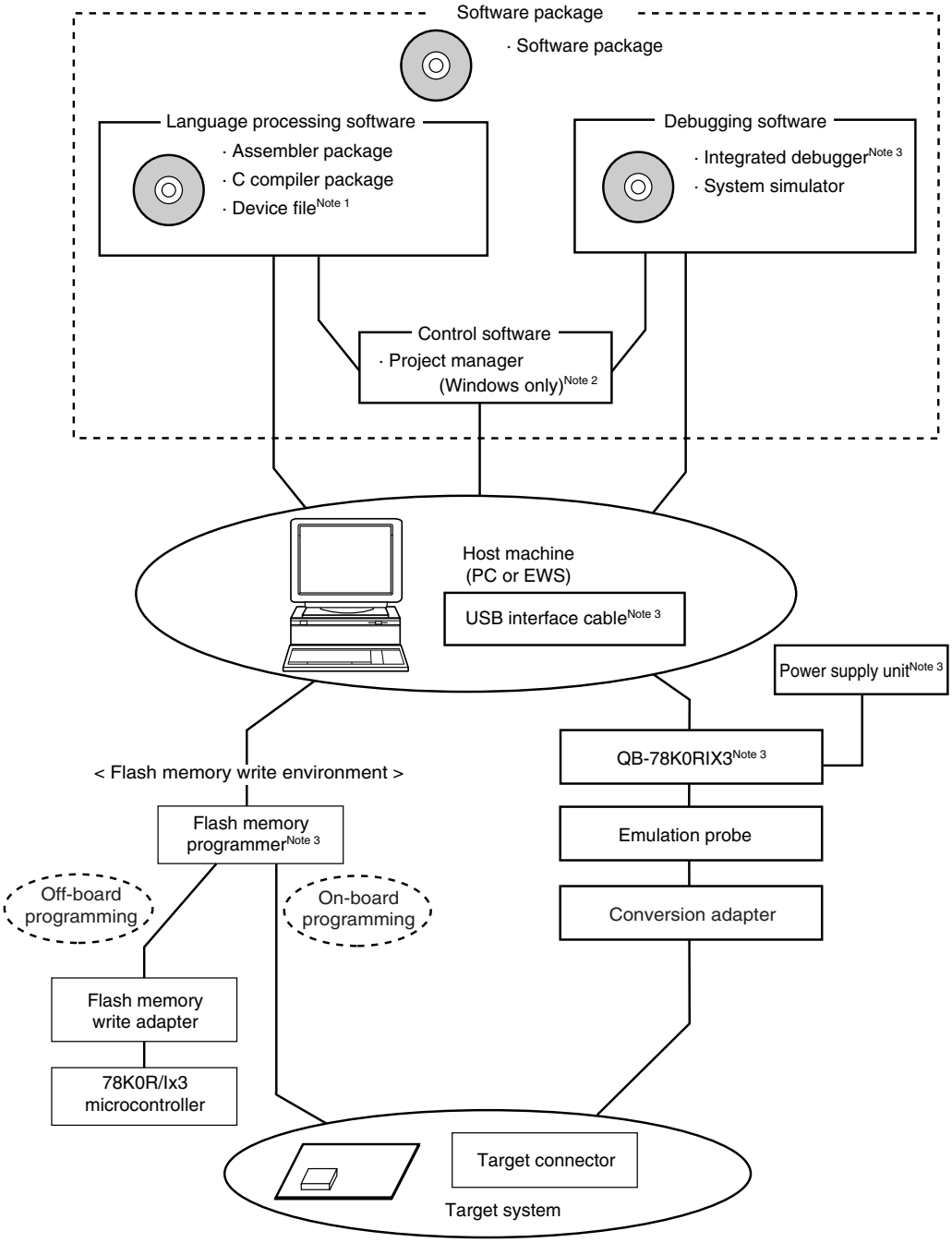

Notes 1. Download the device file for 78K0R/Ix3 (DF781235) from the download site for development tools (http://www.necel.com/micro/ods/eng/index.html).

2. The project manager PM+ is included in the assembler package.
The PM+ is only used for Windows.

3. In-circuit emulator QB-78K0RIX3 is supplied with integrated debugger ID78K0R-QB, on-chip debug emulator with programming function QB-MINI2, power supply unit, and USB interface cable. Any other products are sold separately.

Figure A-1. Development Tool Configuration (2/2)

(2) When using the on-chip debug emulator with programming function QB-MINI2

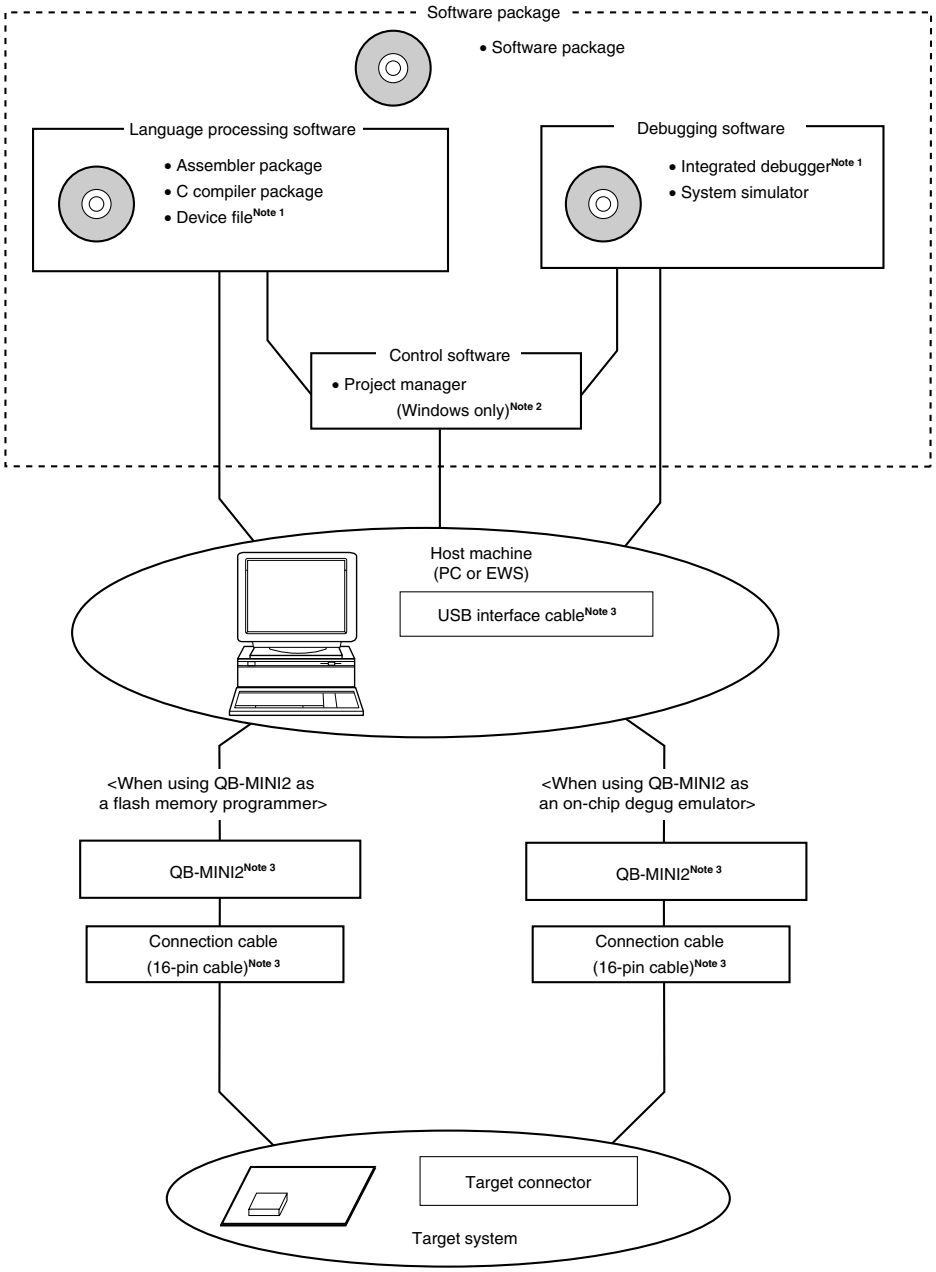

Notes 1. Download the device file for 78K0R/Ix3 (DF781235) and the integrated debugger (ID78K0R-QB) from the download site for development tools (http://www.necel.com/micro/ods/eng/index.html).

2. The project manager PM+ is included in the assembler package.
The PM+ is only used for Windows.

3. QB-MINI2 is supplied with USB interface cable, connection cables (10-pin cable and 16-pin cable), and 78K0-OCD board. Any other products are sold separately. In addition, download the software for operating the QB-MINI2 from the download site for MINICUBE2 (http://www.necel.com/micro/en/development/asia/minicube2/minicube2.html).

A.1 Software Package

SP78K0R 78K0R Series software package	Development tools (software) common to the 78K0R microcontrollers are combined in this package.
	Part number: μS××××SP78K0R

Remark ×××× in the part number differs depending on the host machine and OS used.

μS××××SP78K0R

××××	Host Machine	OS	Supply Medium
AB17	PC-9800 series, IBM PC/AT compatibles	Windows (Japanese version)	CD-ROM
BB17		Windows (English version)	

A.2 Language Processing Software

RA78K0R Assembler package	This assembler converts programs written in mnemonics into object codes executable with a microcontroller. This assembler is also provided with functions capable of automatically creating symbol tables and branch instruction optimization. This assembler should be used in combination with a device file (DF781235). **<Precaution when using RA78K0R in PC environment>** This assembler package is a DOS-based application. It can also be used in Windows, however, by using the Project Manager (included in assembler package) on Windows.
	Part number: μS××××RA78K0R
CC78K0R C compiler package	This compiler converts programs written in C language into object codes executable with a microcontroller. This compiler should be used in combination with an assembler package and device file (both sold separately). **<Precaution when using CC78K0R in PC environment>** This C compiler package is a DOS-based application. It can also be used in Windows, however, by using the Project Manager (included in assembler package) on Windows.
	Part number: μS××××CC78K0R
DF781235 Note Device file	This file contains information peculiar to the device. This device file should be used in combination with a tool (RA78K0R, CC78K0R, SM+ for 78K0R, and ID78K0R-QB) (all sold separately). The corresponding OS and host machine differ depending on the tool to be used.
	Part number: μS××××DF781235

Note The DF781235 can be used in common with the RA78K0R, CC78K0R, SM+ for 78K0R, and ID78K0R-QB. Download the DF781235 from the download site for development tools (http://www.necel.com/micro/ods/eng/index.html).

Remark ×××× in the part number differs depending on the host machine and OS used.

μS××××RA78K0R
μS××××CC78K0R

××××	Host Machine	OS	Supply Medium
AB17	PC-9800 series, IBM PC/AT compatibles	Windows (Japanese version)	CD-ROM
BB17		Windows (English version)	

μS××××DF781235

××××	Host Machine	OS	Supply Medium
AB13	PC-9800 series, IBM PC/AT compatibles	Windows (Japanese version)	3.5-inch 2HD FD
BB13		Windows (English version)	

A.3 Control Software

PM+ Project manager	This is control software designed to enable efficient user program development in the Windows environment. All operations used in development of a user program, such as starting the editor, building, and starting the debugger, can be performed from the project manager. **<Caution>** The project manager is included in the assembler package (RA78K0R). It can only be used in Windows.

A.4 Flash Memory Programming Tools

A.4.1 When using flash memory programmers PG-FP5 and FL-PR5

PG-FP5 and FL-PR5 Flash memory programmer	Flash memory programmer dedicated to microcontrollers with on-chip flash memory.
FA-78F1235GB-GAH-RX Note (support RoHS) Flash memory programming adapter	Flash memory programming adapter used connected to the flash memory programmer for use.

Note Flash memory programming adapter for the 78K0R/IE3. An adapter for writing the flash memory of products other than the 78K0R/IE3 is currently being developed.

Remarks 1. The FL-PR5 and FA-78F1235GB-GAH-RX are product of Naito Densei Machida Mfg. Co., Ltd.
2. Use the latest version of the flash memory programming adapter.

A.4.2 When using on-chip debug emulator with programming function QB-MINI2

QB-MINI2 On-chip debug emulator with programming function	This is a flash memory programmer dedicated to microcontrollers with on-chip flash memory. It is available also as on-chip debug emulator which serves to debug hardware and software when developing application systems using the 78K0R/Ix3. The QB-MINI2 is supplied with a USB interface cable and connection cables (10-pin cable and 16-pin cable), and the 78K0-OCD board. To use 78K0R/Ix3, use USB interface cable and 16-pin connection cable.

Remark Download the software for operating the QB-MINI2 from the download site for MINICUBE2 (http://www.necel.com/micro/en/development/asia/minicube2/minicube2.html).

A.5 Debugging Tools (Hardware)

A.5.1 When using in-circuit emulator QB-78K0RIX3

QB-78K0IX3 In-circuit emulator	This in-circuit emulator serves to debug hardware and software when developing application systems using the 78K0R/Ix3 microcontrollers. It supports to the integrated debugger (ID78K0R-QB). This emulator should be used in combination with a power supply unit and emulation probe, and the USB is used to connect this emulator to the host machine.
QB-144-CA-01 Check pin adapter	This check pin adapter is used in waveform monitoring using the oscilloscope, etc.
QB-80-EP-01T Emulation probe	This emulation probe is flexible type and used to connect the in-circuit emulator and target system.
QB-xxxx-EA-xxx Note Exchange adapter	This exchange adapter is used to perform pin conversion from the in-circuit emulator to target connector.
QB-xxxx-YS-xxx Note Space adapter	This space adapter is used to adjust the height between the target system and in-circuit emulator.
QB-xxxx-YQ-xxx Note YQ connector	This YQ connector is used to connect the target connector and exchange adapter.
QB-xxxx-HQ-xxx Note Mount adapter	This mount adapter is used to mount the target device with socket.
QB-xxxx-NQ-xxx Note Target connector	This target connector is used to mount on the target system.

Note The part numbers of the exchange adapter, space adapter, YQ connector, mount adapter, and target connector and the packages of the target device are described below.

Package		Exchange Adapter	Space Adapter	YQ Connector	Mount Adapter	Target Connector
78K0R/IB3	30-pin plastic SSOP (MC-CAB type)	QB-30MC-EA-05T	QB-30MC-YS-01T	QB-30MC-YQ-01T	QB-30MC-HQ-01T	QB-30MC-NQ-01T
78K0R/IC3	38-pin plastic SSOP (MC-GAA type)	QB-38MC-EA-03T	QB-38MC-YS-01T	QB-38MC-YQ-01T	QB-38MC-HQ-01T,	QB-38MC-NQ-01T,
	44-pin plastic LQFP (GB-GAF type)	QB-44GB-EA-04T	QB-44GB-YS-01T	QB-44GB-YQ-01T	QB-44GB-HQ-01T	QB-44GB-NQ-01T
	48-pin plastic TQFP (GB-HAA type)	QB-48GA-EA-04T	QB-48GA-YS-01T	QB-48GA-YQ-01T	QB-48GA-HQ-01T	QB-48GA-NQ-01T
78K0R/ID3	52-pin plastic LQFP (GB-GAG type)	QB-52GB-EA-04T	QB-52GB-YS-01T	QB-52GB-YQ-01T	QB-52GB-HQ-01T	QB-52GB-NQ-01T
78K0R/IE3	64-pin plastic LQFP (GB-GAH type)	QB-64GB-EA-04T	QB-64GB-YS-01T	QB-64GB-YQ-01T	QB-64GB-HQ-01T	QB-64GB-NQ-01T
	64-pin plastic LQFP (GK-GAJ type)	QB-64GK-EA-04T	QB-64GK-YS-01T	QB-64GK-YQ-01T	QB-64GK-HQ-01T	QB-64GK-NQ-01T

(Remarks are listed on the next page or later.)

Remarks 1. The QB-78K0RIX3 is supplied with a power supply unit and USB interface cable. As control software, integrated debugger ID78K0R-QB and on-chip debug emulator with programming function QB-MINI2 are supplied.

2. The packed contents differ depending on the part number, as follows.

Packed Contents / Part Number	In-Circuit Emulator	Emulation Probe	Exchange Adapter	YQ Connector	Target Connector
QB-78K0RIX3-ZZZ	QB-78K0RIX3	None			
QB-78K0RIX3-T30MC		QB-80-EP-01T	QB-30MC-EA-05T	QB-30MC-YQ-01T	QB-30MC-NQ-01T
QB-78K0RIX3-T38MC			QB-38MC-EA-03T	QB-38MC-YQ-01T	QB-38MC-NQ-01T
QB-78K0RIX3-T44GB			QB-44GB-EA-04T	QB-44GB-YQ-01T	QB-44GB-NQ-01T
QB-78K0RIX3-T48GA			QB-48GA-EA-04T	QB-48GA-YQ-01T	QB-48GA-NQ-01T
QB-78K0RIX3-T52GB			QB-52GB-EA-04T	QB-52GB-YQ-01T	QB-52GB-NQ-01T
QB-78K0RIX3-T64GB			QB-64GB-EA-04T	QB-64GB-YQ-01T	QB-64GB-NQ-01T
QB-78K0RIX3-T64GK			QB-64GK-EA-04T	QB-64GK-YQ-01T	QB-64GK-NQ-01T

A.5.2 When using on-chip debug emulator with programming function QB-MINI2

QB-MINI2 On-chip debug emulator with programming function	This on-chip debug emulator serves to debug hardware and software when developing application systems using the 78K0R/Ix3 microcontrollers. It is available also as flash memory programmer dedicated to microcontrollers with on-chip flash memory. The QB-MINI2 is supplied with a USB interface cable and connection cables (10-pin cable and 16-pin cable), and the 78K0-OCD board. To use 78K0R/Ix3, use USB interface cable and 16-pin connection cable.

Remark Download the software for operating the QB-MINI2 from the download site for MINICUBE2 (http://www.necel.com/micro/en/development/asia/minicube2/minicube2.html).

A.6 Debugging Tools (Software)

SM+ for 78K0R System simulator	SM+ for 78K0R is Windows-based software. It is used to perform debugging at the C source level or assembler level while simulating the operation of the target system on a host machine. Use of SM+ for 78K0R allows the execution of application logical testing and performance testing on an independent basis from hardware development, thereby providing higher development efficiency and software quality. SM+ for 78K0R should be used in combination with the device file (DF781235).
	Part Number : μS××××SM781000
ID78K0R-QB Integrated debugger	This debugger supports the in-circuit emulators for the 78K0R microcontrollers. The ID78K0R-QB is Windows-based software. It has improved C-compatible debugging functions and can display the results of tracing with the source program using an integrating window function that associates the source program, disassemble display, and memory display with the trace result. ID78K0R-QB should be used in combination with the device file (DF781235).
	Part number: μS××××ID78K0R-QB

Remark ×××× in the part number differs depending on the host machine and OS used.

μS××××SM781000
μS××××ID78K0R-QB

××××	Host Machine	OS	Supply Medium
AB17	PC-9800 series, IBM PC/AT compatibles	Windows (Japanese version)	CD-ROM
BB17		Windows (English version)	

Published by: NEC Electronics Corporation (http://www.necel.com/)
Contact: http://www.necel.com/support/