REV.	ECN.NO.	MODIFY.CONTENT	DATE
A	ES.D0804.012	初版發行	2008/4/1

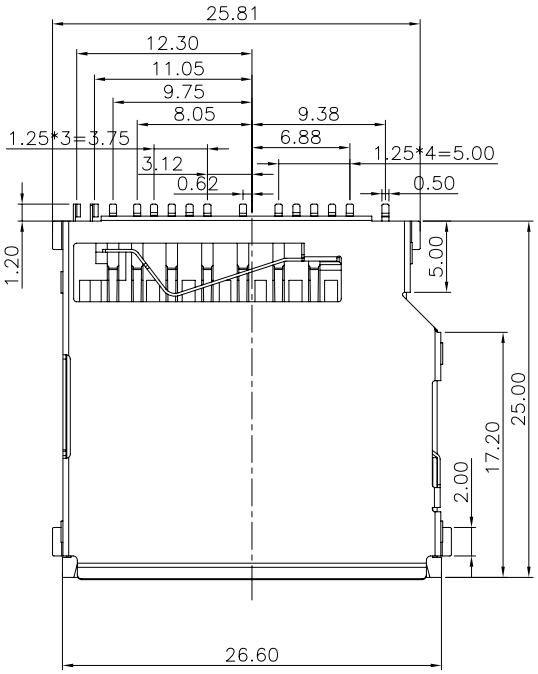

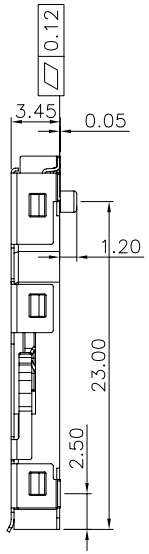

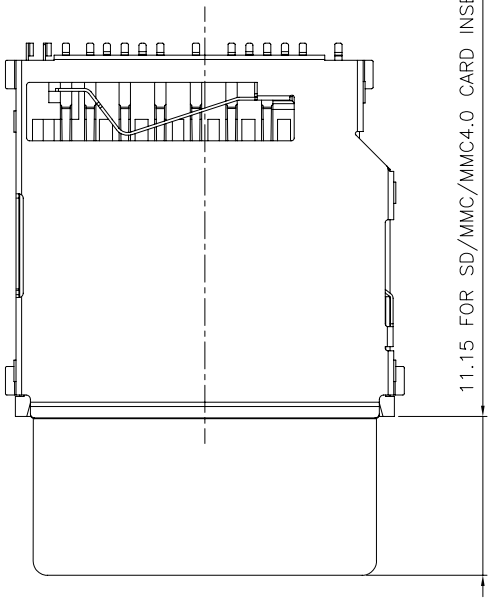

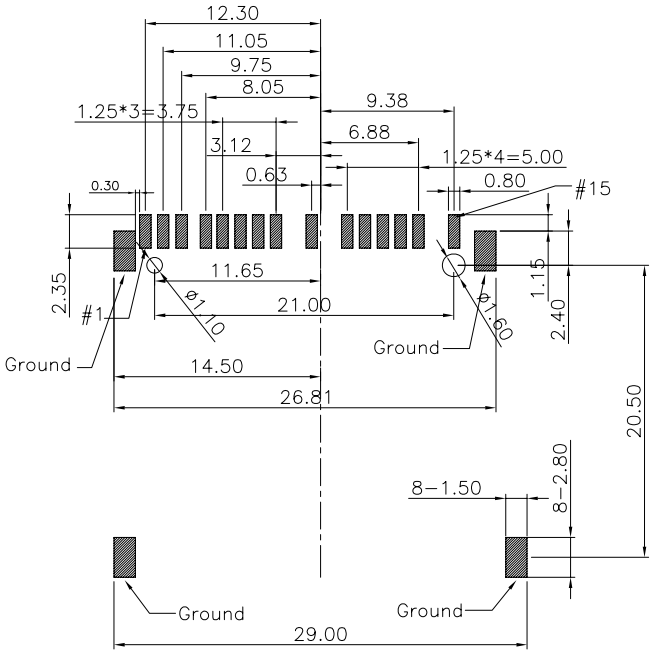

RECOMMENDED P.C.BOARD LAYOUT(TOP VIEW)

TOLERANCES UNLESS OTHERWISE SPEC.±0.05

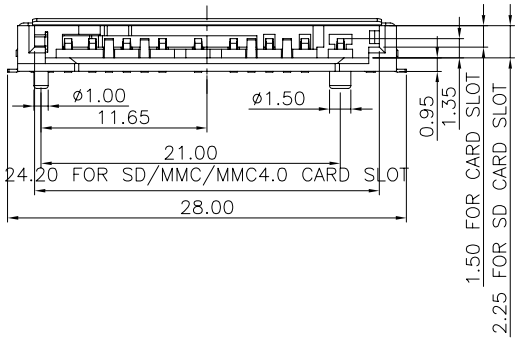

10100565**

- 64 *Contact area: Min 1u"Au on top of 50u"Ni.*
  Solder tail: Min 160u"Tin on top of 50u"Ni
- 65 *Contact area: Min 3u"Au on top of 50u"Ni.*
  Solder tail: Min 160u"Tin on top of 50u"Ni
- 66 *Contact area: Min 5u"Au on top of 50u"Ni.*
  Solder tail: Min 160u"Tin on top of 50u"Ni
- 67 *Contact area: Min 10u"Au on top of 50u"Ni.*
  Solder tail: Min 160u"Tin on top of 50u"Ni
- 68 *Contact area: Min 15u"Au on top of 50u"Ni.*
  Solder tail: Min 160u"Tin on top of 50u"Ni

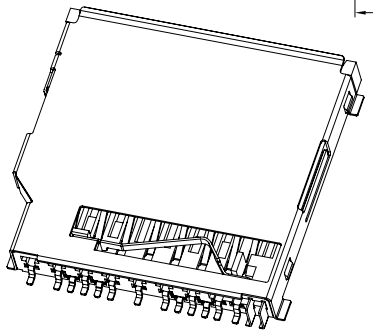

PIN ASSIGNMENT

NO.	SIGNALS FUNCTION	SD/MMC4.0
#1	WP SW	SD
#2	CD SW	SD
#3	DAT1 (Data 1)	SD-8
#4	DAT0 (Data 0)	SD-7
#5	DAT7 (Data 7)	MMC-13
#6	GND/VSS 2	SD-6
#7	DAT6 (Data 6)	MMC-12
#8	CLK	SD-5
#9	VCC/VDD	SD-4
#10	VSS 1	SD-3
#11	DAT5(Data 5)	MMC-11
#12	CMD	SD-2
#13	DAT4(Data 4)	MMC-10
#14	DAT3(Data 3)	SD-1
#15	DAT2(Data 2)	SD-9

CIRCUIT:

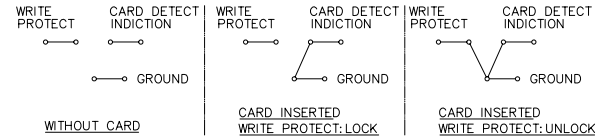

Notes:
1.All Dimensions are in Millimeters.
2.Operation voltage: 100 VAC max.
3.Current rating : 1 Amps max.
4.Contact resistance: 40m ohms max.
5.Insulation resistance: 1000M ohms min. 500 VDC
6.Dielectric withstanding voltage: 500 VAC / 1minute
7.Opterating Temperature: −20℃ to +60℃
8.Storage Temperature: −40℃ to +70℃
9. Total Mating Force : 40N (MAX) at 25 mm/minute
10.Total Unmating Force: 2N (MIN) at 25 mm/minute

GENERAL	TOLERANCE	FILE.NO.	10100565	PART.NO.	10100565**	DRAWN	lily.li	MATERIAL		SCALE	no scale
X.±0.50	x. °± 5°	REV.	A					DATE	2008/4/1	UNIT	mm
.X±0.38	.x °± 2°	SIZE		TITLE	SD+MMC+MMC4.0 Conn.	CHECKED		Amphenol Shouh Min Industry			
.XX±0.25	.xx± 1°	A4		SHEET	1 OF 1	APPROVED					