Data Sheet, Rev. 1.0, May 2008

BTM7811K

TrilithIC

Automotive Power

Never stop thinking

Table of Contents

	Table of Contents	2
1	**Overview**	3
2	**Pin Configuration**	4
2.1	Pin Assignment	4
2.2	Terms	6
3	**Block Diagram**	7
4	**Circuit Description**	8
4.1	Input Circuit	8
4.2	Output Stages	8
4.3	Short Circuit Protection	8
4.4	Overtemperature Protection	8
4.5	Undervoltage Lockout	8
4.6	Open Load Detection	8
4.7	Status Flag	9
5	**Electrical Characteristics**	10
5.1	Absolute Maximum Ratings	10
5.2	Functional Range	11
5.3	Thermal Resistance	11
5.4	Electrical Characteristics	12
6	**Application Information**	16
7	**Package Outlines**	17
8	**Revision History**	18

1 Overview

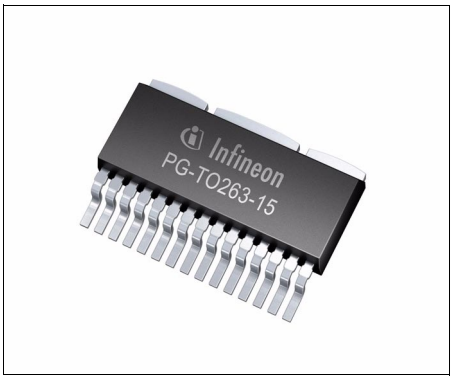

PG-TO263-15-1

Features

- Quad D-MOS switch
- Free configurable as bridge or quad-switch
- Optimized for DC motor management applications
- Low $R_{DS\ ON}$
  High side: 26 mΩ typ. @ 25°C, 65 mΩ max. @ 110°C
  Low side: 14mΩ typ. @ 25°C, 28 mΩ max. @ 110°C
- Maximum peak current: typ. 42 A @ 25 °C
- Very low quiescent current: typ. 4 µA @ 25 °C
- Thermally optimized power package
- Operates up to 40 V
- PWM capability up to 25 kHz
- Load and GND-short-circuit-protection
- Overtemperature shut down with hysteresis
- Undervoltage detection with hysteresis
- Open load detection in OFF mode
- Status flag for overtemperature
- Internal clamp diodes
- Isolated sources for external current sensing
- Green Product (RoHS compliant)
- AEC Qualified

Description

The **BTM7811K** is part of the **TrilithIC** family containing three dies in one package: One double high-side switch and two low-side switches. The drains of these three vertical DMOS chips are mounted on separated lead frames. The sources are connected to individual pins, so the **BTM7811K** can be used in H-bridge- as well as in any other configuration. The double high-side switch is manufactured in SMART SIPMOS® technology which combines low $R_{DS\ ON}$ vertical DMOS power stages with CMOS circuitry for control, protection and diagnosis. To achieve low $R_{DS\ ON}$ and fast switching performance, the low-side switches are manufactured in S-FET logic level technology.

Type	Package	Marking
BTM7811K	PG-TO263-15-1	BTM7811K

2 Pin Configuration

2.1 Pin Assignment

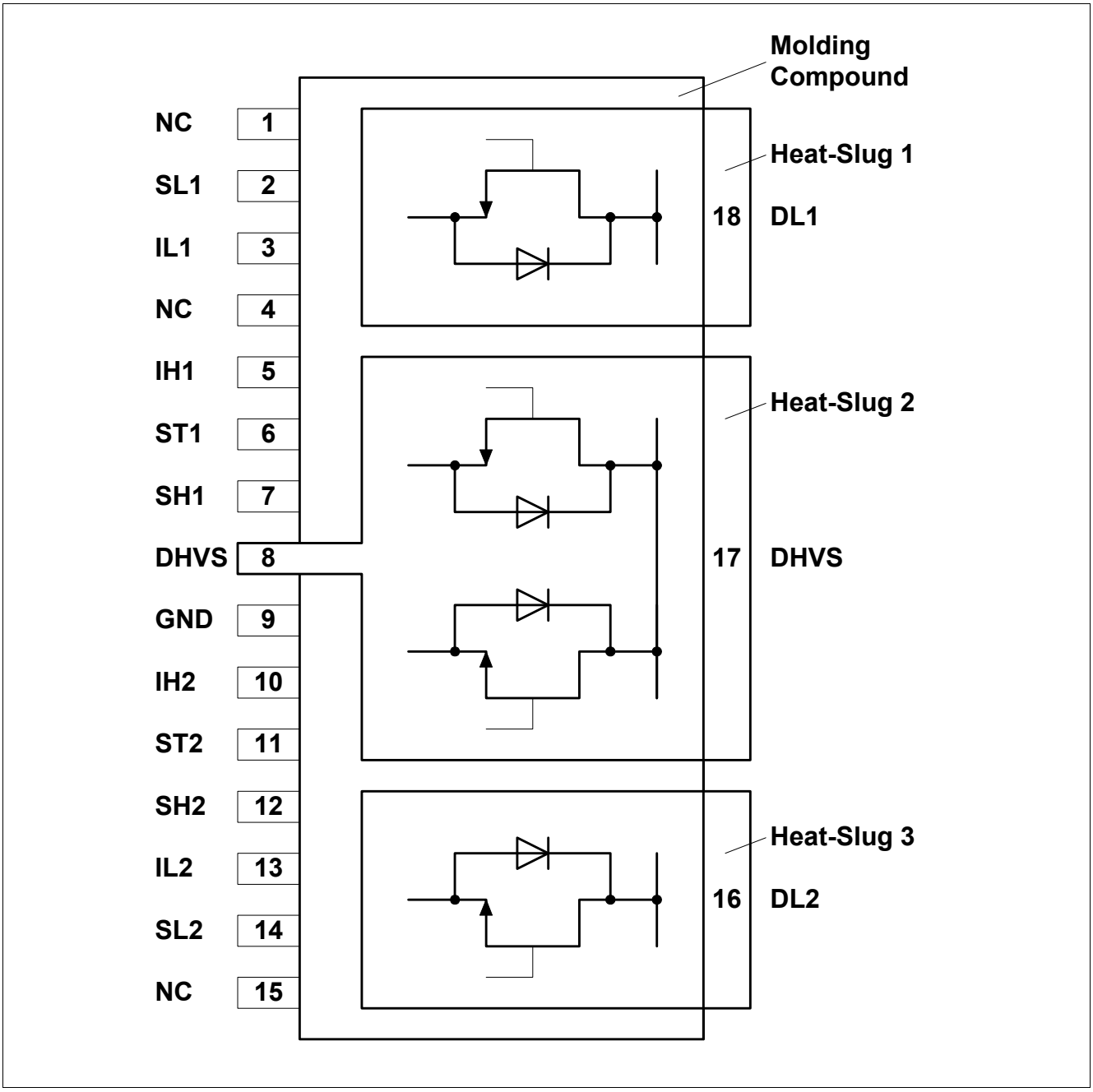

Figure 1 Pin Assignment BTM7811K (Top View)

Table 1 Pin Definitions and Functions

Pin No.	Symbol	Function
1	NC	Not connected
2	**SL1**	**Source of low-side switch 1**
3	IL1	Analog input of low-side switch 1
4	NC	Not connected
5	IH1	Digital input of high-side switch 1
6	ST1	Status of high-side switch 1; open Drain output
7	**SH1**	**Source of high-side switch 1**
8	**DHVS**	**Drain of high-side switches and power supply voltage**
9	GND	Ground of high-side switches
10	IH2	Digital input of high-side switch 2
11	ST2	Status of high-side switch 2; open Drain output
12	**SH2**	**Source of high-side switch 2**
13	IL2	Analog input of low-side switch 2
14	**SL2**	**Source of low-side switch 2**
15	NC	Not connected
16	**DL2**	**Drain of low-side switch 2** **Heat-Slug 3**
17	**DHVS**	**Drain of high-side switches and power supply voltage** **Heat-Slug 2**
18	**DL1**	**Drain of low-side switch 1** **Heat-Slug 1**

Pins written in **bold type** need power wiring.

2.2 Terms

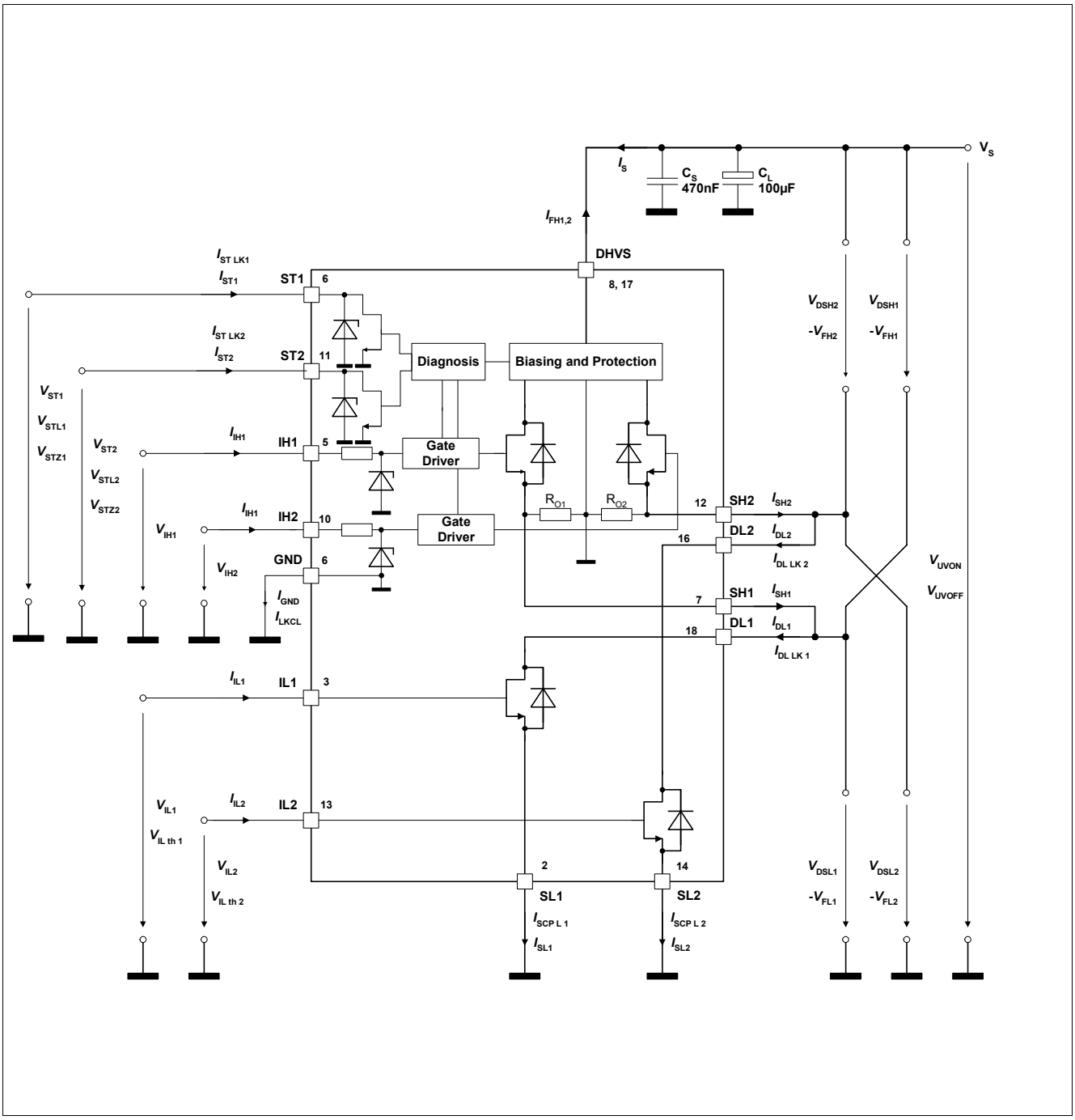

Figure 2 Terms BTM7811K

Table 2

HS-Source-Current	Named during Short Circuit	Named during Leakage-Cond.
$I_{SH1,2}$	$I_{SCP\ H}$	$I_{DL\ LK}$

3 Block Diagram

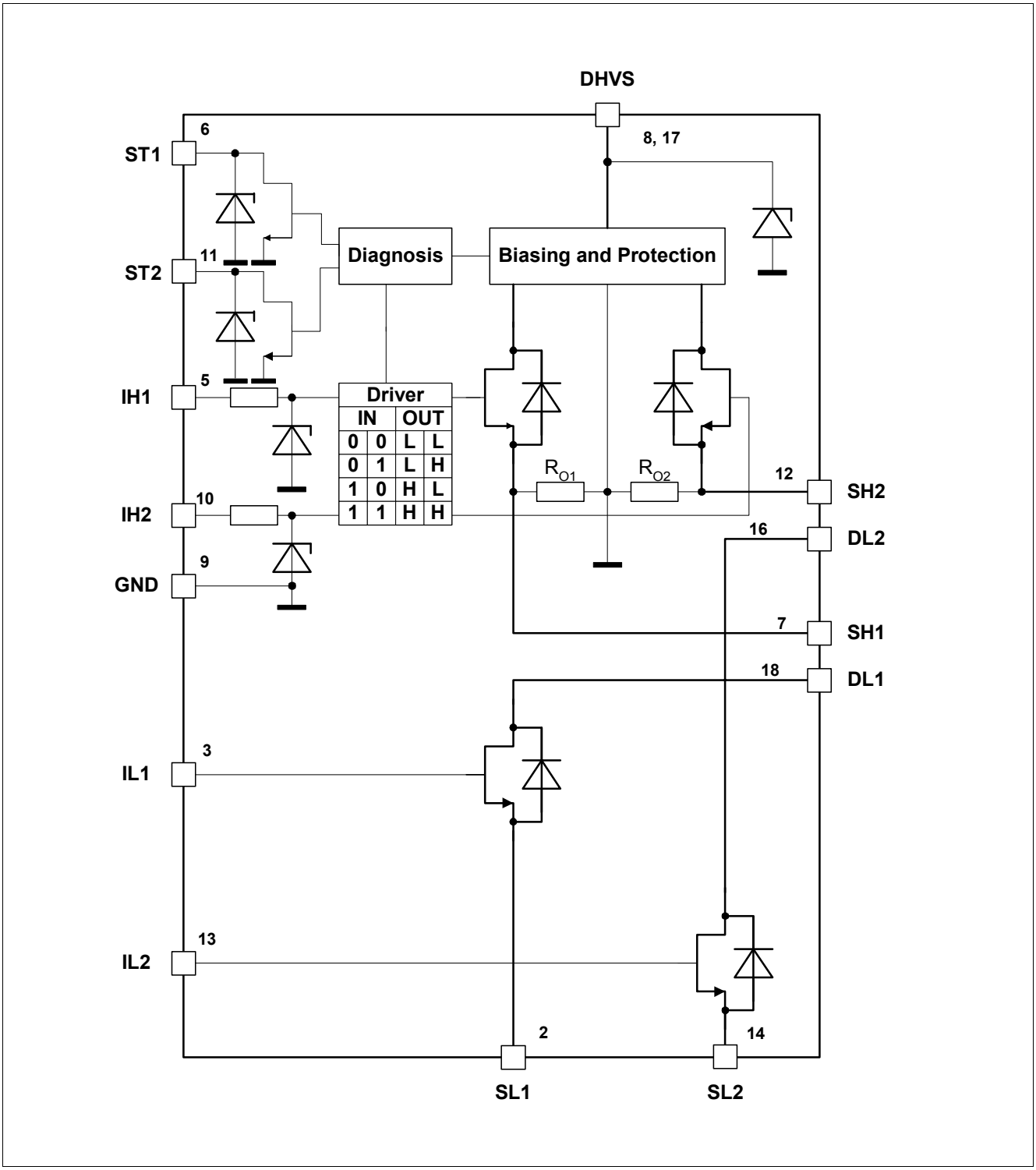

Figure 3 Block Diagram BTM7811K

4 Circuit Description

4.1 Input Circuit

The control inputs IH1,2 consist of TTL/CMOS compatible Schmitt-Triggers with hysteresis. Buffer amplifiers are driven by these stages and convert the logic signal into the necessary form for driving the power output stages. The inputs are protected by ESD clamp-diodes. The inputs IL1 and IL2 are connected to the gates of the standard N-channel vertical power-MOS-FETs.

4.2 Output Stages

The output stages consist of an low R_{DSON} Power-MOS H-bridge. In H-bridge configuration, the D-MOS body diodes can be used for freewheeling when communicating inductive loads. If the high-side switches are used as single switches, positive and negative voltage spikes which occur when driving inductive loads are limited by integrated power clamp diodes.

4.3 Short Circuit Protection

The outputs are protected against short circuit to ground and short circuit over load.

In short circuit to ground and short circuit over load situation the HS switches will limit the load current. Due to the high power dissipation in short circuit situation the junction temperature will rise. The over temperature protection function will switch off the output transistors if the junction temperature reaches the over temperature shutdown limit.

4.4 Overtemperature Protection

The high-side switches also incorporate an over temperature protection circuit with hysteresis which switches off the output transistors and sets the status output to low.

4.5 Undervoltage Lockout

When V_S reaches the switch-on voltage V_{UVON} the IC becomes active with a hysteresis. The high-side output transistors are switched off if the supply voltage V_S drops below the switch off value V_{UVOFF}.

4.6 Open Load Detection

The open load detection of the BTM7811K works in OFF condition and is based on a voltage measurement at the source of the high side switch. In order to use the open load detection SH2 has to be connected to Vcc via a pull up resistor. Because this pull up resistor would connect the bridge output to the µC supply it needs to be disconnected whenever the high side switch is on. This can be done by a transistor as shown in the application example (**Figure 5 “Application Example BTM7811K” on Page 16**). To check for open load:

- Set IH1 = IH2 = LOW (both high side switches off)
- Set IL2 = LOW, IL1 = HIGH (only low side switch 1 is on)
- Connect R_{ol} (open load pull up) to 5V via transistor

If the load is connected properly it will pull down the voltage at SH2 to a value close to 0V.

If the load is disconnected the resistor will pull the voltage at SH2 to value close to Vcc.

If the voltage at SH2 is higher than the open load detection voltage $V_{OUT(OL)}$ then ST will be pulled down.

4.7 Status Flag

The status flag outputs are open drain outputs with zener-diode which require a pull-up resistor, as shown in the application circuit in **Figure 5 "Application Example BTM7811K" on Page 16**. Various errors as listed in the table "Diagnosis" are reported by switching the open drain output ST to low.

Table 3 Truthtable and Diagnosis (valid only for the High-Side-Switches)

Flag	IH1	IH2	SH1	SH2	ST1	ST2	Remarks
	Inputs		Outputs				
Normal operation; identical with functional truth table	0	0	L	L	1	1	stand-by mode
	0	1	L	H	1	1	switch2 active
	1	0	H	L	1	1	switch1 active
	1	1	H	H	1	1	both switches active
Open load at high-side switch 1	0	X	Z	X	0	1	detected
	1	X	H	X	1	1	
Open load at high-side switch 2	X	0	X	Z	1	0	detected
	X	1	X	H	1	1	
Overtemperature high-side switch1	0	X	L	X	1	1	
	1	X	L	X	0	1	detected
Overtemperature high-side switch2	X	0	X	L	1	1	
	X	1	X	L	1	0	detected
Overtemperature both high-side switches	0	0	L	L	1	1	
	0	1	L	L	1	0	detected
	1	0	L	L	0	1	detected
	1	1	L	L	0	0	detected
Undervoltage	X	X	L	L	1	1	not detected

*Note: * multiple simultaneous errors are not shown in this table*

Inputs:	Outputs:	Status:
0 = Logic LOW	Z = Output in tristate condition	1 = No error
1 = Logic HIGH	L = Output in sink condition	0 = Error
X = don't care	H = Output in source condition	–
–	X = Voltage level undefined	–

5 Electrical Characteristics

5.1 Absolute Maximum Ratings

Absolute Maximum Ratings[1)]

-40 °C < T_j < 110 °C; all voltages with respect to ground, positive current flowing into pin (unless otherwise specified)

Pos.	Parameter	Symbol	Limit Values		Unit	Remarks
			min.	max.		
High-Side-Switches (Pins DHVS, IH1,2 and SH1,2)						
5.1.1	Supply voltage	V_S	– 0.3	42	V	–
5.1.2	Supply voltage for full short circuit protection	$V_{S(SCP)}$	–	28	V	
5.1.3	HS-drain current[2)]	I_S	– 14	[3)]	A	T_A = 25°C; t_P < 100 ms
5.1.4	HS-input current	I_{IH}	– 5	5	mA	Pin IH1 and IH2
5.1.5	HS-input voltage	V_{IH}	– 10	16	V	Pin IH1 and IH2
Status Output ST						
5.1.6	Status pull up voltage	V_{ST}	– 0.3	5.4	V	
5.1.7	Status Output current	I_{ST}	– 5	5	mA	Pin ST1 or ST2
Low-Side-Switches (Pins DL1,2, IL1,2 and SL1,2)						
5.1.8	Drain-Source-Clamp voltage	V_{DSL}	55	–	V	V_{IL} = 0 V; $I_D \leq$ 1 mA T_j = 25°C
5.1.9	LS-drain current[2)]	I_{DL}	– 21	26	A	T_A = 25°C; t_P < 100 ms
5.1.10			–	42	A	T_A = 25°C; t_P < 10 ms
5.1.11			–	67	A	T_A = 25°C; t_P < 1 ms
5.1.12	LS-input voltage	V_{IL}	– 20	20	V	Pin IL1 and IL2
Temperatures						
5.1.13	Junction temperature	T_j	– 40	110	°C	–
5.1.14	Storage temperature	T_{stg}	– 55	150	°C	–
ESD Protection[4)]						
5.1.15	Input LS-Switch	V_{ESD}	–	0.5	kV	
5.1.16	Input HS-Switch	V_{ESD}	–	1	kV	
5.1.17	Status HS-Switch	V_{ESD}	–	2	kV	
5.1.18	Output LS and HS-Switch	V_{ESD}	–	4	kV	all other pins connected to Ground

1) Not subject to production test; specified by design
2) Single pulse
3) Internally limited
4) ESD susceptibility HBM according to EIA/JESD22-A114-B (1.5kΩ, 100pF)

Note: Stresses above the ones listed here may cause permanent damage to the device. Exposure to absolute maximum rating conditions for extended periods may affect device reliability.

Note: Integrated protection functions are designed to prevent IC destruction under fault conditions described in the data sheet. Fault conditions are considered as "outside" normal operating range. Protection functions are not designed for continuous repetitive operation.

5.2 Functional Range

Pos.	Parameter	Symbol	Limit Values		Unit	Remarks
			min.	max.		
5.2.1	Supply voltage	V_S	V_{UVOFF}	42	V	After V_S rising above V_{UVON}
5.2.2	Supply voltage for PWM operation	$V_{S(PWM)}$	8	18	V	–
5.2.3	Input voltage HS	V_{IH}	– 0.3	15	V	–
5.2.4	Input voltage LS	V_{IL}	– 0.3	20	V	–
5.2.5	Status output current	I_{ST}	0	2	mA	–
5.2.6	Junction temperature	T_j	– 40	110	°C	–

Note: Within the functional range the IC operates as described in the circuit description. The electrical characteristics are specified within the conditions given in the related electrical characteristics table

5.3 Thermal Resistance

Pos.	Parameter	Symbol	Limit Values			Unit	Conditions
			Min.	Typ.	Max.		
5.3.1	LS-junction to case[1)]	$R_{thJC\ L}$	–	–	1.05	K/W	
5.3.2	HS-junction to case[1)]	$R_{thJC\ H}$	–	–	1.45	K/W	
5.3.3	Junction to ambient[1)] $R_{thJA} = T_{j(HS)} / (P_{(HS)} + P_{(LS)})$	R_{thJA}	–	16	–	K/W	[2)]

1) Not subject to production test, specified by design.

2) Specified R_{thJA} value is according to Jedec JESD51-2,-5,-7 at natural convection on FR4 2s2p board; The Product (chip+package) was simulated on a 76.2 x 114.3 x 1.5 mm board with 2 inner copper layers (2 x 70µm Cu, 2 x 35µm Cu). Where applicable a thermal via array under the exposed pad contacted the first inner copper layer.

5.4 Electrical Characteristics

Electrical Characteristics

$I_{SH1} = I_{SH2} = I_{SL1} = I_{SL2} = 0$ A; – 40 °C < T_j < 110 °C; 8 V < V_S < 18 V (unless otherwise specified)

Pos.	Parameter	Symbol	Limit Values			Unit	Test Condition
			min.	typ.	max.		
Current Consumption HS-switch							
5.4.1	Quiescent current	I_S	–	4	9	µA	IH1 = IH2 = 0 V T_j = 25 °C
			–	–	15	µA	IH1 = IH2 = 0 V
5.4.2	Supply current; one HS-switch active	I_S	–	4	8	mA	IH1 or IH2 = 5 V V_S = 12 V
5.4.3	Supply current; both HS-switches active	I_S	–	8	16	mA	IH1 and IH2 = 5 V V_S = 12 V
5.4.4	Leakage current of high-side switch	$I_{SH\ LK}$	–	–	7	µA	$V_{IH} = V_{SH}$ = 0 V V_S = 12 V T_j = 85 °C
5.4.5	Leakage current through logic GND in free wheeling condition	$I_{LKCL} = I_{FH} + I_{SH}$	–	2.2	10	mA	I_{FH} = 5 A V_S = 12 V
Current Consumption LS-switch							
5.4.6	Input current	I_{IL}	–	10	100	nA	V_{IL} = 20 V; V_{DSL} = 0V
5.4.7	Leakage current of low-side switch	$I_{DL\ LK}$	–	–	12	µA	V_{IL} = 0 V V_{DSL} = 40V T_j = 85 °C
Under Voltage Lockout HS-switch							
5.4.8	Switch-ON voltage	V_{UVON}	–	–	5	V	V_S increasing
5.4.9	Switch-OFF voltage	V_{UVOFF}	1.8	–	4.5	V	V_S decreasing
5.4.10	Switch ON/OFF hysteresis	V_{UVHY}	–	1	–	V	$V_{UVON} - V_{UVOFF}$

Electrical Characteristics

$I_{SH1} = I_{SH2} = I_{SL1} = I_{SL2} = 0$ A; – 40 °C < T_j < 110 °C; 8 V < V_S < 18 V (unless otherwise specified)

Pos.	Parameter	Symbol	Limit Values			Unit	Test Condition
			min.	typ.	max.		
Output stages							
5.4.11	Inverse diode of high-side switch; Forward-voltage	V_{FH}	–	0.8	1.2	V	I_{FH} = 5 A
5.4.12	Inverse diode of low-side switch; Forward-voltage	V_{FL}	–	0.8	1.2	V	I_{FL} = 5 A
5.4.13	Static drain-source on-resistance of high-side switch	$R_{DS\ ON\ H}$	–	26	–	mΩ	I_{SH} = 5 A; V_S = 12 V T_j = 25 °C
			–	45	65	mΩ	I_{SH} = 5 A; V_S = 12 V T_j = 110°C[2)]
5.4.14	Static drain-source on-resistance of low-side switch	$R_{DS\ ON\ L}$	–	14	–	mΩ	I_{SL} = 5 A; V_{IL} = 5 V T_j = 25 °C
			–	20	28	mΩ	I_{SL} = 5 A; V_{IL} = 5 V T_j = 110 °C[2)]
5.4.15	Maximum load current for cross current free operation [2)] V_{IL}= 7V; R_{Gate} = 50Ω; T_j = 110 °C	$I_{Lmax\ ccf}$	7	11	–	A	V_S > 8V
			–	14	–	A	V_S = 10V
			–	17	–	A	V_S = 12V

Note: The device is regarded as cross current free if the reverse flowing charge through the high side switch is less than 1µC.

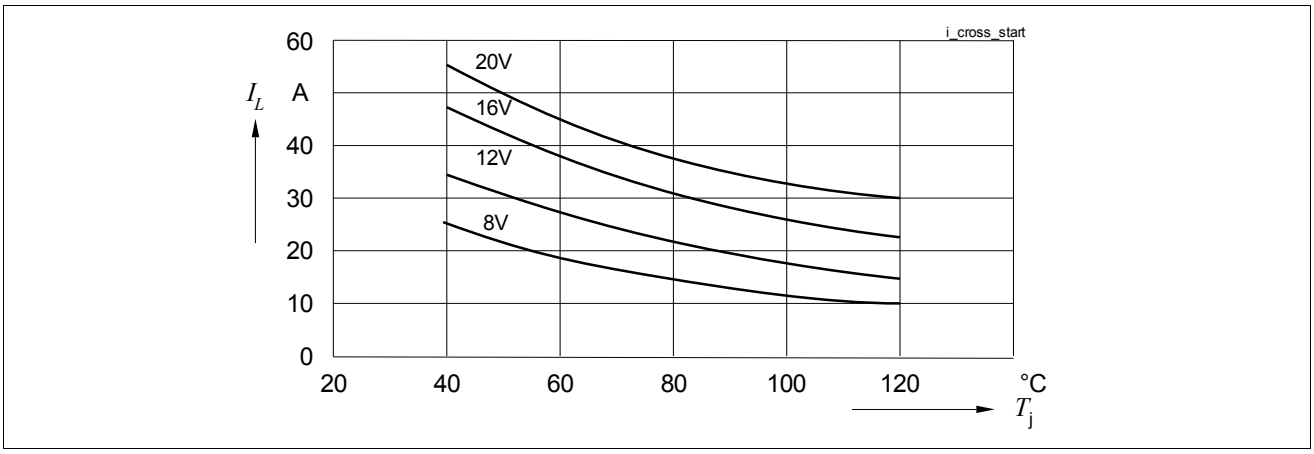

Figure 4 : Start of Cross Conduction vs. I_L, V_s and junction Temperature T_j

Electrical Characteristics

$I_{SH1} = I_{SH2} = I_{SL1} = I_{SL2} = 0$ A; – 40 °C < T_j < 110 °C; 8 V < V_s < 18 V (unless otherwise specified)

Pos.	Parameter	Symbol	Limit Values			Unit	Test Condition
			min.	typ.	max.		
Short Circuit of high-side switch to GND							
5.4.16	Initial peak SC current[1)] t_{del} = 150 µs; V_S = 12 V; V_{DSH} = 12V	$I_{SCP\ H}$	35	48	65	A	T_j = -40 °C
				42		A	T_j = 25°C
			27	36	48	A	T_j = 110°C[2)]
Short Circuit of high-side switch to V_S							
5.4.17	Output pull-down-resistor	R_O	7	14	42	kΩ	V_{DSL} = 3 V
Thermal Shutdown[2)]							
5.4.18	Thermal shutdown junction temperature	$T_{j\ SD}$	155	180	190	°C	–
5.4.19	Thermal switch-on junction temperature	$T_{j\ SO}$	150	170	180	°C	–
5.4.20	Temperature hysteresis	ΔT	–	10	–	°C	$\Delta T = T_{jSD} - T_{jSO}$
Status Flag Output ST of high-side switch							
5.4.21	Low output voltage	$V_{ST\ L}$	–	0.2	0.6	V	I_{ST} = 1.6 mA
5.4.22	Leakage current	$I_{ST\ LK}$	–	–	5	µA	V_{ST} = 5 V
5.4.23	Zener-limit-voltage	$V_{ST\ Z}$	5.4	–	–	V	I_{ST} = 1.6 mA
5.4.24	Status change after positive input slope with open load[2)]	$t_{d(SToffo+)}$	–	–	20	µs	
5.4.25	Status change after negative input slope with open load[2)]	$t_{d(SToffo-)}$	–	–	700	µs	
5.4.26	Status change after positive input slope with overtemperature[2)]	$t_{d(STofft+)}$	–	1.6	10	µs	R_{ST} = 47 kΩ
5.4.27	Status change after negative input slope with overtemperature[2)]	$t_{d(STofft-)}$	–	14	100	µs	R_{ST} = 47 kΩ
Open Load Detection in Off Condition							
5.4.28	Open Load Detection Voltage	$V_{OUT(OL)}$	2	3	4	V	V_s = 12 V
Switching times of high-side switch[2)]							
5.4.29	Turn-ON-time to 90% V_{SH}	t_{ON}	–	100	220	µs	R_{Load} = 12 Ω V_S = 12 V
5.4.30	Turn-OFF-time to 10% V_{SH}	t_{OFF}	–	120	250	µs	
5.4.31	Slew rate on 10 to 30% V_{SH}	dV/d_{tON}	–	0.5	1.1	V/µs	
5.4.32	Slew rate off 70 to 40% V_{SH}	$-dV/d_{tOFF}$	–	0.7	1.3	V/µs	
Switching times of low-side switch[2)]							
5.4.33	Turn-ON Delay Time	$t_{d(on)}$	–	20	–	ns	resistive load I_{SL}= 3A; V_{DSL}=12V V_{IL} = 5V; R_G = 16Ω
5.4.34	Rise Time	t_r	–	85	–	ns	
5.4.35	Switch-OFF Delay Time	$t_{d(off)}$	–	60	–	ns	
5.4.36	Fall Time	t_f	–	80	–	ns	
Gate charge of low-side switch[2)]							
5.4.37	Input to source charge;	Q_{IS}	–	4.5	–	nC	I_{SL} = 3 A; V_{DSL}=12 V

Electrical Characteristics

$I_{SH1} = I_{SH2} = I_{SL1} = I_{SL2} = 0$ A; – 40 °C < T_j < 110 °C; 8 V < V_S < 18 V (unless otherwise specified)

Pos.	Parameter	Symbol	Limit Values			Unit	Test Condition
			min.	typ.	max.		
5.4.38	Input to drain charge;	Q_{ID}	–	12	–	nC	I_{SL} = 3 A; V_{DSL}=12 V
5.4.39	Input charge total;	Q_I	–	30	60	nC	I_{SL} = 3 A; V_{DSL}=12 V V_{IL} = 0 to 5 V
5.4.40	Input plateau voltage;	$V_{(plateau)}$	–	2.6	–	V	I_{SL} = 3 A; V_{DSL}=12 V
Control Inputs of high-side switches IH 1, 2							
5.4.41	H-input voltage	$V_{IH\ High}$	–	–	3.0	V	–
5.4.42	L-input voltage	$V_{IH\ Low}$	1	–	–	V	–
5.4.43	Input voltage hysteresis	$V_{IH\ HY}$	–	0.5	–	V	–
5.4.44	H-input current	$I_{IH\ High}$	5	30	65	µA	V_{IH} = 5 V
5.4.45	L-input current	$I_{IH\ Low}$	5	14	25	µA	V_{IH} = 0.4 V
5.4.46	Input series resistance	R_I	2.7	4	6	kΩ	–
5.4.47	Zener limit voltage	$V_{IH\ Z}$	5.4	–	–	V	I_{IH} = 1.6 mA
Control Inputs IL1, 2							
5.4.48	Gate-threshold-voltage	$V_{IL\ th}$	0.8	1.7	3.0	V	I_{DL} = 1 mA

1) When Vs>18V the peak short circuit current is significantly lower.
2) Not subject to production test; specified by design

Note: The listed characteristics are ensured over the operating range of the integrated circuit. Typical characteristics specified mean values expected over the production spread. If not otherwise specified, typical characteristics apply at T_A = 25 °C and the given supply voltage.

6 Application Information

Note: The following simplified application examples are given as a hint for the implementation of the device only and shall not be regarded as a description or warranty of a certain functionality, condition or quality of the device. The function of the described circuits must be verified in the real application

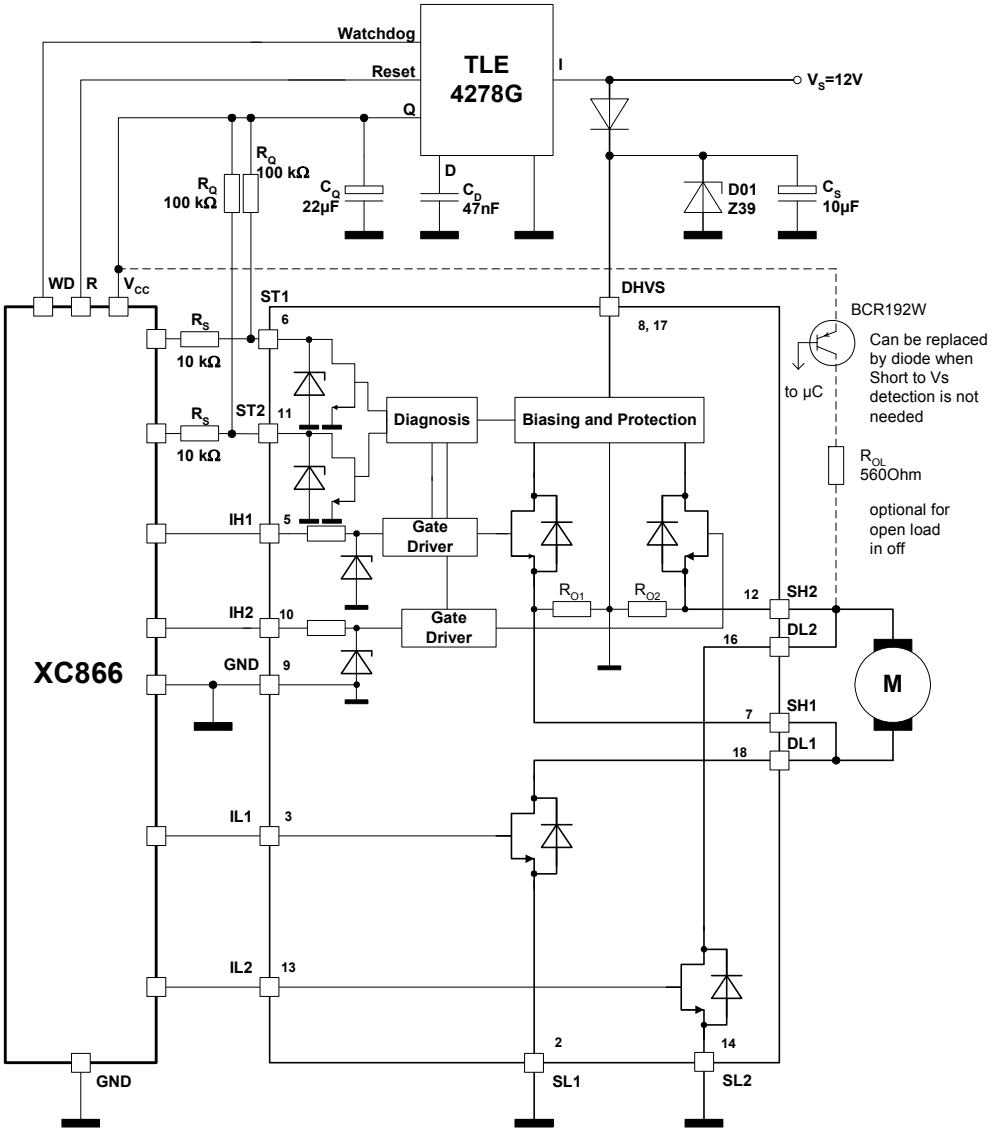

Figure 5 Application Example BTM7811K

7 Package Outlines

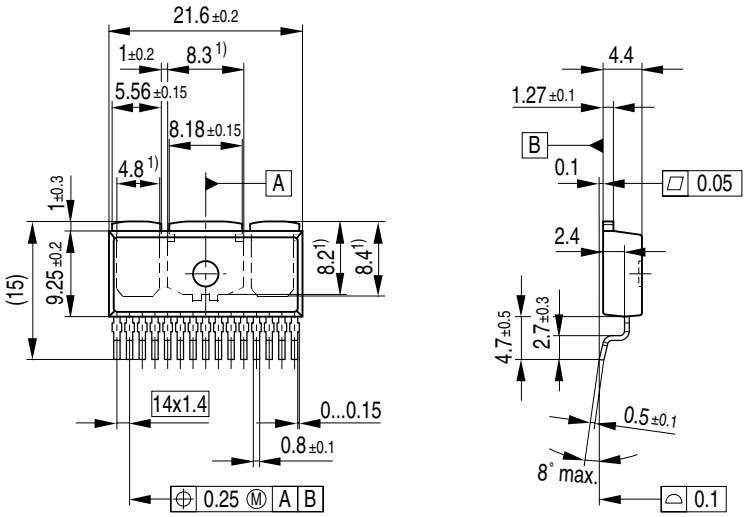

1) Typical
All metal surfaces tin plated, except area of cut.

Footprint

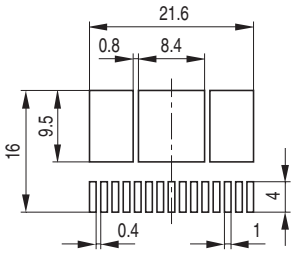

Figure 6 PG-TO263-15-1 (Plastic Transistor Single Outline Package)

Green Product (RoHS compliant)

To meet the world-wide customer requirements for environmentally friendly products and to be compliant with government regulations the device is available as a green product. Green products are RoHS-Compliant (i.e Pb-free finish on leads and suitable for Pb-free soldering according to IPC/JEDEC J-STD-020).

For further information on alternative packages, please visit our website:
http://www.infineon.com/packages.

Dimensions in mm

8 Revision History

Rev.	Date	Changes
1.0	2008-05-15	Initial Version

Edition 2008-05-15

Published by
Infineon Technologies AG
81726 Munich, Germany

© 5/14/08 Infineon Technologies AG
All Rights Reserved.

Legal Disclaimer

The information given in this document shall in no event be regarded as a guarantee of conditions or characteristics. With respect to any examples or hints given herein, any typical values stated herein and/or any information regarding the application of the device, Infineon Technologies hereby disclaims any and all warranties and liabilities of any kind, including without limitation, warranties of non-infringement of intellectual property rights of any third party.

Information

For further information on technology, delivery terms and conditions and prices, please contact the nearest Infineon Technologies Office (**www.infineon.com**).

Warnings

Due to technical requirements, components may contain dangerous substances. For information on the types in question, please contact the nearest Infineon Technologies Office.

Infineon Technologies components may be used in life-support devices or systems only with the express written approval of Infineon Technologies, if a failure of such components can reasonably be expected to cause the failure of that life-support device or system or to affect the safety or effectiveness of that device or system. Life support devices or systems are intended to be implanted in the human body or to support and/or maintain and sustain and/or protect human life. If they fail, it is reasonable to assume that the health of the user or other persons may be endangered.