Modicon™ Momentum™ automation platform

Catalog
2011

Schneider Electric™

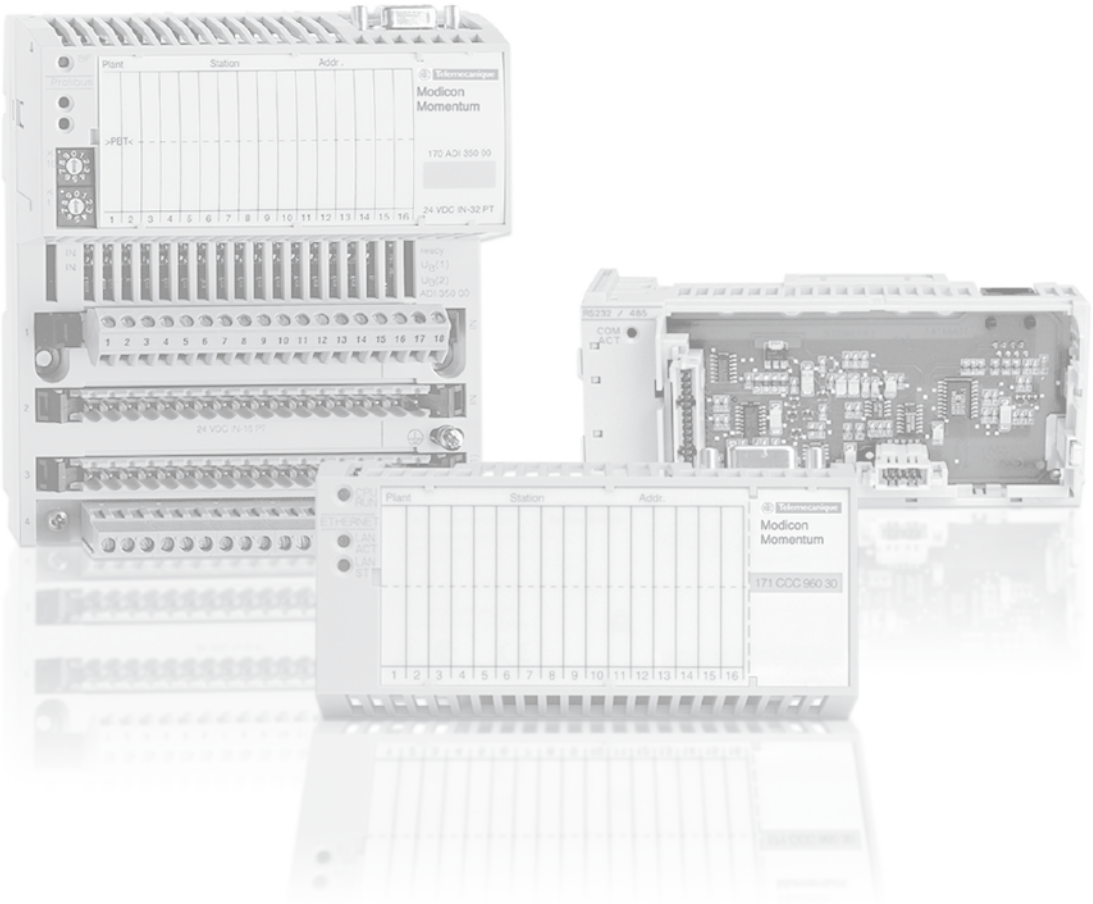
Plant
Station
Addr.
Modicon
Momentum
170 ADI 350 00
24 VDC IN-32 PT
RS232 / 485
COM
ACT
Modicon
Momentum
171 CCC 960 30

A full range of catalogs for . . . . . .

Detection

Global Detection Electronic and electromechanical sensors

MKTED208052EN

Photo-electric sensors
Proximity sensors
Capacitive proximity sensors
Ultrasonic sensors
Limit switches
Pressure switches
Rotary encoders
Radio frequency identification
Machine cabling accessories

Automation

Modicon™ Quantum™ automation platform Catalog 2009

MKTED208011EN-US

Safety PLCs
Safety CPUs
Unity™ Concept™ and ProWORX™ software

Modicon™ Premium™ automation platform Catalog 2010

MKTED208054EN-US

Unity processors
PL7 processors
Communication software

Modicon™ M340™ automation platform Catalog 2010

DIA6ED2081007EN-US

PLCs
Discrete, analog I/O and application-specific solutions
Communication

Automation

Modicon™ Momentum™ automation platform Catalog 2010

MKTED205061EN-US

Twido™ programmable controller and TwidoSuite™ software

DIA3ED2090202EN

Controller base
Discrete, analog I/O
Communication

Automation functions, relays, interfaces and power supplies

MKTED207031EN

Smart relays
Timing relays
Measurement & control relays
Analog interfaces
Counters
Plug-in relays
Interfaces for discrete signals
Power supplies & transformers

Software
PLCs and safety controllers programming software

Operator dialog

Control and signalling components

MKTED208031EN

Control and signalling units
Control stations & enclosures
Cam switches
Beacons and indicator banks
Pendant control stations
Controllers
Emergency stops
Foot switches

Magelis™ Human/Machine Interfaces Catalog 2010

MKTED206071EN-US

Operator interface terminals
Industrial PCs
HMI and SCADA PC-based software

Software
Vijeo Designer
Operator terminal software

Motion and Drives

Lexium™ 32 Servo Drives motion control Catalog 2009/2010

DIA7ED2090405EN-US

Motion controllers
Servo drives and Servo motors
Stepper motors and drives
Integrated drives
Modicon Premium motion control modules

Soft starters and variable speed drives

MKTED206111EN

Soft starters and variable speed drives

Software
Software for drives
Motor control programming software

Some products shown in this catalog are not available in every country. Check individual country's web site or Sales Office for product availability.
*See our web site: **www.schneider-electric.us/***

Schneider Electric

.....Automation & Control functions

Motor control

Motor starter solutions
Control and protection components

MKTED205103EN

Contactors
Circuit-breakers, fuse carriers
Thermal relays
Combinations, motor controllers
Mounting solutions
Motor starter mounting kits

Machine safety

*This catalog contains Automation and Control function products relating to **machines Safety***

Preventa™
Machine Safety Products
Catalog 2009

MKTED208051EN-US

Safety PLCs
Safety controllers
Safety monitors
Safety solutions on AS-Interface cabling system
Safety switches
Safety light curtains
Safety mats
Emergency stops
Control stations
Enabling switches
Foot switches
Beacons & indicator banks
Switch disconnectors
Thermal-magnetic motor circuit breakers
Enclosed D.O.L. starters

Software
XPSMFWIN configuration software
XPSMCWIN configuration software

Interfaces and I/O

Terminal blocks

MKTED207011EN

Terminal blocks
Cable ends

Modicon™ STB
IP 20 distributed inputs/outputs
Catalog 2010

MKTED208053EN-US

Modules for automation station
Network interfaces
Power distribution
Digital I/O, analogs and application-specific

Software
STB configuration software

Power supplies

Phaseo™ power supplies and transformers

DIA3ED2061209EN

Switch mode power supplies
Filtered rectified power supplies
Transformers

Systems & architectures

This catalog contains Automation and Control function products relating to Communication

Machine & Installations with industrial communication

MKTED207012EN

Preferred implementations
Ethernet TCP/IP, the universal communication standard
CANopen for machines and installations
AS-Interface, simple and ASI-Safe

Products
Human-Machine interface
Controllers and PLCs
Field devices
Infrastructure and wiring
Gateways

Software and tools
Collaborative Automation
Partner Program & Partners

Modicon™ Momentum™ automation platform

■ Introduction 6

Discrete I/O bases

Selection guide 8

■ Introduction, description. 12

■ Specifications. 13

■ References 19

■ Dimensions, mounting 20

■ Wiring diagrams. 20

Analog I/O bases

Selection guide 26

■ Introduction, description. 28

■ Specifications. 29

■ References 35

■ Dimensions, mounting 35

■ Wiring diagrams. 36

Specialty module I/O bases

Selection guide 38

■ Introduction, description. 40

■ Specifications. 41

■ References 42

■ Wiring diagrams. 43

Communication adapters

Selection guide 44

■ Ethernet TCP/IP network communication adapters 48

■ Modbus Plus™ network communication adapters. 50

■ FIPIO™ bus communication adapters. 54

■ InterBus™ bus communication adapters 56

■ Profibus DP™ bus communication adapter. 58

M1/M1E processor adapters and option adapters

Processor adapters selection guide 60

- M1/M1E processor adapters
  - Introduction 62
  - Description 63
  - Specifications 64
  - References 68

Option adapters selection guide 70

- Option adapters
  - Introduction 72
  - Description 73
  - Specifications 74
  - References 75

Ethernet network cabling system

- Infrastructure 76
- ConneXium™ connection components 78
- ConneXium hub 80
- ConneXium transceiver 81
- ConneXium switches 82

Programming software *(for M1/M1E processor adapters)*

- Concept™ IEC programming software
  - Introduction 90
  - Functions 91
  - References 95
- ProWORX™ 32 for 984™ Ladder Logic programming software
  - Introduction 96
  - References 99

Additional products and services

- Optional conformal coating for agressive environments
  - Introduction 100
  - References 101
- Enhanced grouding system
  - Introduction 102
  - References 102
- User documentation 103
- Automation product certifications 104
- Community regulations 105
- Product reference index 106

Advantys™, Altistart™, Altivar™, Concept™, ConneXium™, FactoryCast™, FIPIO™, FIPway™, Lexium™, Magelis™, M340™, Modbus™, Modbus Plus™, Modicon™, Modsoft™, Momentum™, OSItrack™, Phaseo™, PowerSuite™, Premium™, Preventa™, ProWORX 32™, Quantum™, Schneider Electric™, Telefast™, TeSys™, Transparent Ready™, TSX Micro™, Twido™, TwidoSoft™, TwidoSuite™, Unity™, Unity™ Pro, Vijeo Designer™, Vijeo Look™ X-Way™ are trademarks or registered trademarks of Schneider Electric. Other trademarks used herein are the property of their respective owners.

Modicon™ Momentum™ automation platform

A modular concept with four easy pieces

The Modicon™ Momentum™ I/O system is comprised of 4 fundamental components – that easily snap together in various combinations – to form a versatile, distributed I/O system.

The four components are:
1 I/O base
2 Communication adapter
3 Processor adapter
4 Option adapter

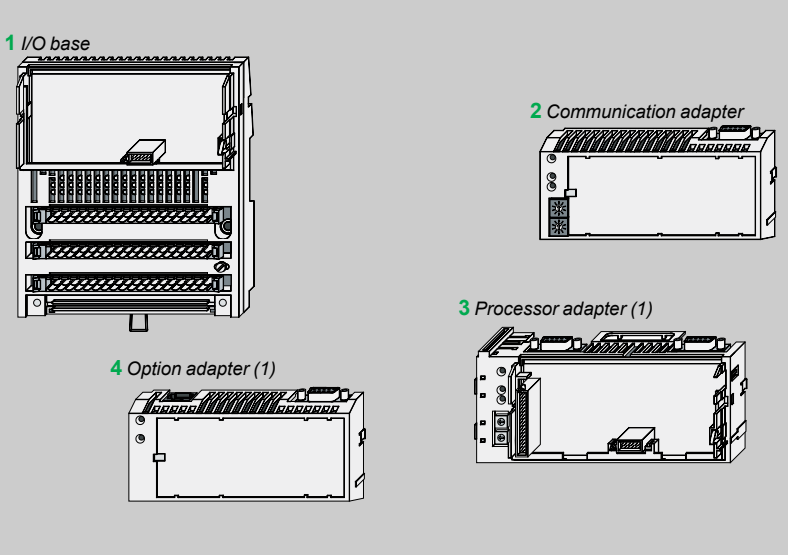

Modicon Momentum communication adapters 2

The design of the Modicon Momentum separates the communications from the I/O base 1, thus creating a truly open I/O system that can be easily adapted to any fieldbus network. When a Modicon Momentum I/O is coupled with a communication adapter 2, the two form a remote I/O drop that connects directly to virtually any standard fieldbus I/O network. Together, Modicon Momentum I/O supports different types of control systems, including: personal computers, distributed control systems, programmable controllers and Modicon Momentum processors.

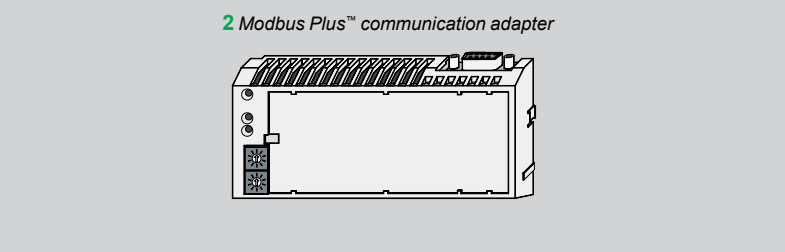

(1) The processor adapters 3 are only compatible with Concept™ or ProWORX™ software.

Modicon™ Momentum™ automation platform

Modicon™ Momentum™ I/O bases

A specialized Modicon Momentum I/O base supports the rest of the control system. The communication adapter **2**, processor adapter and option adapter all snap onto the I/O base **1**. A selection of I/O base modules are available, including analog I/O, discrete I/O, multi-function analog and bi-directional discrete bases. In addition, Modicon Momentum I/O bases offer simple plug-in terminal strips, as well as standard 35 mm DIN rail or panel mounting, for ease of maintenance and installation.

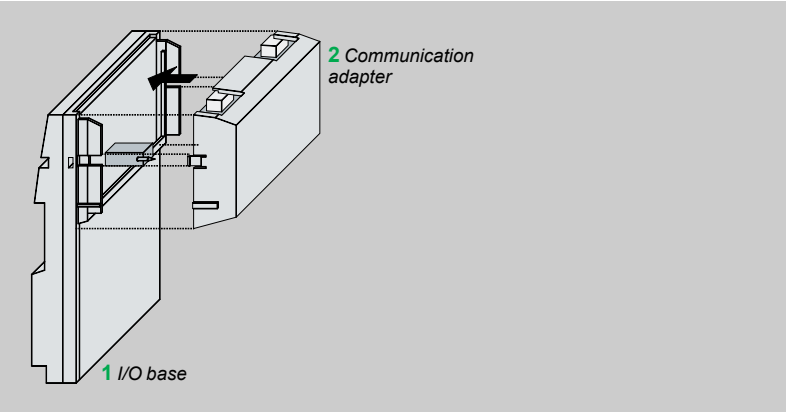

Modicon Momentum processors adapters 3 and option adapters 4 (1)

When local distributed intelligence is required at the point of control, Modicon Momentum has the answer. The Modicon Momentum M1 processor adapter **3** is a full fledged PLC containing a CPU, RAM and Flash memory. It is based on the popular Modicon family of PLCs (i.e., directly compatible with Quantum™, Compact™ and 984™ PLCs), and snaps onto the Modicon Momentum I/O base **1**, just like the communication adapter **2**.

The option adapter **4** provides the processor adapter with additional networking capabilities, a time-of-day clock, and a battery back-up. The option adapter also snaps onto the I/O base. In the figure below,the processor adapter is stacked on top.

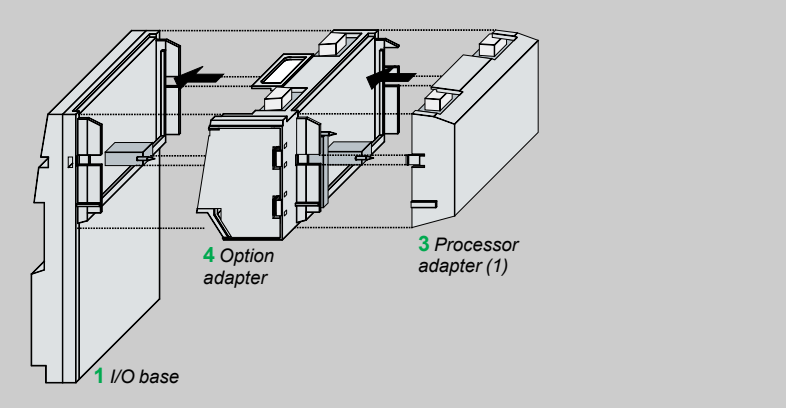

Optional conformal coating

If your control system needs to operate in a corrosive environment, selected Modicon Momentum modules can be ordered with a conformal coating applied to components of the product. Conformal coating will extend product life and enhance its environmental and performance capabilities.
See pages 100 and 101.

Enhanced grounding system

Due to new InterBus standards for electrical noise immunity, a number of Modicon Momentum products have been updated to include an enhanced grounding system. This system is required to meet the revised electrical noise immunity standard (ability to pass a 2.2 kV electrical fast transient burst test).

See page 102 for a list of Modicon Momentum products that currently have been updated to include the new grounding system.

(1) The processor adapters are only compatible with the Concept or ProWORX software.

Modicon™ Momentum™ automation platform

Discrete I/O bases

Product type		Input modules for direct current		Input modules for alternating current	
Type of signal		True high			
Operating voltage and Input voltage		24 Vdc		120 Vac	230 Vac
Current consumption		max. 250 mA		max. 125 mA	
Input type		IEC 1131 Type 1+		IEC 1131 Type 2	IEC 1131 Type 1+
Output voltage		–			
Output type		–			
Number of points		1 x 16 In	2 x 16 In	2 x 8 In	
Potential isolation	Point to point	None		None	
	Group to group	None		1780 Vac	
	Field to adapter	500 Vac		1780 Vac	
Current capacity	Per output	–			
	Per group	–			
	Per module	–			
Response time	OFF-ON	2.2 ms		10 ms @ 60 Hz	13.3 ms @ 60 Hz
	ON-OFF	3.3 ms		35 ms @ 60 Hz	13.3 ms @ 60 Hz
Protection against short circuit and overload		–			
Fault reporting	Detected output fault	–			
	Detected I/O error	–			
	Blown fuse	–			
Type of module		170 ADI 340 00	170 ADI 350 00	170 ADI 540 50	170 ADI 740 50
Pages		17			

Output modules for direct current		Output modules for alternating current				Relay output module
True high						
24 Vdc		120 Vac		230 Vac		120 to 230 Vdc
max. 250 mA		max. 125 mA		max. 65 mA		125 mA @ 120 Vac 65 mA @ 230VDC
–						
24 Vdc		120 Vac		230 Vac		20 to 250 Vac 5 to 30 Vdc
Solid state switch		Triac				Relay from “C”
2 x 8 out	2 x 16 out	2 x 4 out	2 x 8 out	2 x 4 out	2 x 8 out	6 out (isolated)
None		None				1780 Vac for 1 mn
None		None				1780 Vac for 1 mn
500 Vac		1780 Vac				1780 Vac for 1 mn
0.5 A	0.5 A	2 A	0.5 A	2 A	0.5 A	5 A
4 A	8 A	4 A	4 A	4 A	4 A	5 A
8 A	16 A	8 A	8 A	8 A	8 A	21 A @ 60 °C 25 A @ 30 °C
< 0.1 ms		max. 1/2 x 1/f				10 ms
< 0.1 ms		max. 1/2 x 1/f				20 ms
Electronically safeguarded		1 fuse per group				–
1 LED/Out	1 LED/4 Out	None				–
to adapter	to adapter	None				–
–	–	1 LED				–
170 ADO 340 00	**170 ADO 350 00**	**170 ADO 530 50**	**170 ADO 540 50**	**170 ADO 730 50**	**170 ADO 740 50**	**170 ADO 830 30**
17						

Modicon™ Momentum™ automation platform

Discrete I/O bases

Product type		I/O modules for direct current			
Type of signal		True high		True low	True high
Input voltage		24 Vdc			
Operating voltage		24 Vdc			
Current consumption		max. 250 mA			max. 250 mA + sensor current
Input type		IEC 1131 Type 1+			
Output voltage		24 Vdc			
Output type		Solid state switch			
Number of points		1 x 16 In, 2 x 8 Out			4 x 4 In, 2 x 4 Out
Potential isolation	Point to point	None			
	Group to group	None			
	Field to adapter	500 Vac			
Current capacity	Per output	0.5 A			2 A
	Per group	4 A			8 A
	Per module	8 A			16 A
Response time	OFF-ON	2.2 ms In, < 1 ms Out	60 µs in, < 1 ms Out	2.2 ms In, < 1 ms Out	
	ON-OFF	3.3 ms In, < 1 ms Out	80 µs in, < 1 ms Out	3.3 ms In, < 1 ms Out	
Protection against short circuit and overload		Electrically safeguarded outputs			Electrically safeguarded outputs and 4 electronically safeguarded sensor supply group
Fault reporting	Detected output fault	1 LED/Out			
	Detected I/O error	to adapter			
	Blown fuse	–			
Type of module		170 ADM 350 10	170 ADM 350 11	170 ADM 350 15	170 ADM 370 10
Pages		17			

I/O modules for direct current		I/O modules for direct and alternating current		
True high				
24 Vdc	12, 24, 48 Vdc	24 Vdc		120 Vac
24 Vdc	12, 24, 48 Vdc	24 Vdc	120 Vac	
max. 180 mA	500 mA @ 12 Vdc 250 mA @ 24 Vdc 125 mA @ 48 Vdc	max. 250 mA		max. 160 mA
IEC 1131 Type 1+, monitored		IEC 1131 Type 1+		IEC 1131 Type 2
24 Vdc	12, 24, 48 Vdc	24…230 Vac or 20…115 Vdc / 24 Vdc (**170 ADM 390 31** only)		120…132 Vac
Solid state switch		Relay (normally open)		Triac
1 x 16 In, 1x 8 Out and 1 x 4 Out	1 x 16 In, 1 x 16 Out	1 x 10 In, 2 x 4 Out		1 x 10 In, 1 x 8 Out
None	None	None	1780 Vac	None
None	None	None	1780 Vac	None
500 Vac	707 Vdc	500 Vac	500 Vac	1780 Vac
0.5 A	0.5 A	2 A ohmic load		0.5 A
4 A group 1, 2 A group 2	–	8 A ohmic load		2 A
6 A	8 A @ 50 °C, 7 A @ 60 °C	16 A ohmic load		4 A
2.2 ms In, < 1 ms Out	2.2 ms In, < 2.5 ms Out	2.2 ms In, < 10 ms Out		max 1/2 x 1/f
3.3 ms In, < 1 ms Out	3.3 ms In, < 2.5 ms Out	3.3 ms In, < 10 ms Out		max 1/2 x 1/f
Electronically safeguarded outputs	Electrically safeguarded outputs	None	Varistor in parallel with each contact	1 internal fuse per group (not against overload)
1 LED/In, 1 LED/Out	1 LED/Out	None		None
to adapter	to adapter	None		None
–	–	–		1 LED/fuse
170 ADM 390 10	**170 ADM 850 10**	**170 ADM 390 30 / 170 ADM 390 91**	**170 ARM 370 30**	**170 ADM 690 51**
17				

Modicon™ Momentum™ automation platform

Discrete I/O bases

Introduction

Modicon™ Momentum™ automation platform products are modular in design. Communication adapters and Processor adapters are designed to work as functional modules when they are snapped onto a Modicon Momentum I/O base. This I/O base requires that some type of Modicon Momentum adapter be attached before it can be functional.

I/O bases fit into compact standard housings that can be mounted on a DIN rail or on panels in a cabinet. They read information from field sensing devices and control discrete and analog field actuating devices. Terminal blocks and bus bars are available for use with the bases so that these bases can be used to support 2-, 3-, and 4-wire field devices.

I/O field devices and the power supply to the module are connected via three 18-pin terminal blocks and an optional 1-, 2-, or 3-row busbar. The terminal connectors are electrically connected to the module, while the optional busbars are not.

Busbars provide a common connection for the field devices and serve as protective distribution connectors. Depending on the I/O base and the type and number of field devices connected to it, a 1-, 2-, or 3-row busbar may be used.

Terminal blocks and busbars are ordered separately, and are not shipped with the Modicon Momentum I/O bases. They are available in either screw-in or spring-clip versions.

Description

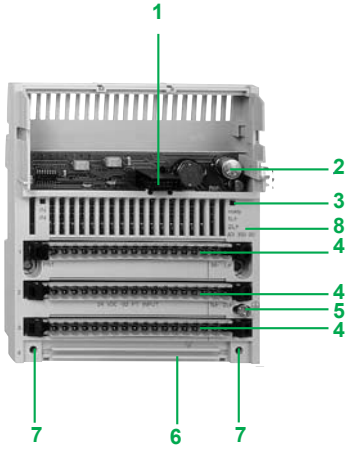

170 AD● discrete I/O base units feature the following on the front panel:

1 Internal interface connector for the communication module or processor module
2 Locking and ground contact for the communication module or processor module
3 LED status indicators (the number of indicators will depend on the number of channels)
4 Up to three connectors for the removable terminal blocks (Modbus dependent).
5 Grounding screw
6 Slot for the power strip
7 Two screw holes for panel mounting
8 Protective cover

Connectors to be ordered separately:

- removable screw or spring terminals **170 XTS 00● 00**
- 1 to 3-row screw or spring bus bar **170 XTS 00● 01**

Specifications: pages 13 to 18
References: page 19
Dimensions, mounting: page 20
Wiring diagrams: pages 20 to 25

Specifications for discrete input bases

Type of input base unit			170 ADI 340 00	170 ADI 350 00	170 ADI 540 50	170 ADI 740 50
Number of inputs			1 x 16	2 x 16	2 x 8	
Input voltage		**V**	24 DC		120 AC	230 AC
Operating voltage		**V**	24 DC		85…132 AC (@ 47…63 Hz)	164…253 AC (@ 47…63 Hz)
Internal current		**mA**	250 (@ 24 Vdc)		125 (@ 120 Vac)	125 (@ 230 Vac)
Input voltage range		**V**	- 3…30 DC		0…132 AC	163…253 AC
	ON voltage	**V**	+ 11…30 DC		74 AC minimum	164 AC minimum
	OFF voltage	**V**	- 3…+ 5 DC		20 AC maximum	40 AC maximum
Input current	ON	**mA**	2.5 minimum		10.0 minimum	
	OFF	**mA**	1.2 maximum		2.0 maximum	
Input resistance		**kΩ**	4		9.5 @ 50 Hz 7.5 @ 60 Hz	9 @ 50 Hz 7.5 @ 60 Hz
Type of signal			True High			
Response time	On-off maximum	**ms**	3.3		35.0 @ 60 Hz	13.3 @ 60 Hz
	Off-on maximum	**ms**	2.2		10.0 @ 60 Hz	13.3 @ 60 Hz
Potential isolation	Input to input		None		None	
	Group to group	**V**	None		1780 AC	
	Field to communication interface	**V**	500 AC		1780 AC	
Power dissipation		**W**	3 typical, 5 maximum	5.5 typical, 8.5 maximum	–	
Agency approvals			UL, CE, CSA, FM Class I, Div. II	UL, CE, CSA	UL, CE, CSA, FM Class I, Div. II	UL, CE, CSA

References:
page 19

Dimensions, mounting:
page 20

Wiring diagrams:
pages 20 to 25

Specifications for discrete output bases

Type of output base unit			170 ADO 340 00	170 ADO 350 00	170 ADO 830 30
Number of outputs			2 x 8	2 x 16	1 x 6
Type of output			Solid state switch		Relay form "C"
Output voltage		V	24 DC		20…250 AC, 5…30 DC
Operating voltage		V	24 DC		120…230 AC
Internal current		mA	250 @ 24 Vdc		125 @ 120 Vac, 65 @ 230 Vac
Current	Point maximum	A	0.5	0.5	5
	Group	A	4	8	5
	Module	A	8	16	21 @ 60 °C, 25 @ 30 °C
Min. output current		mA	–		50
Leakage current		mA	< 1 @ 24 Vdc		< 0.1 @ 120 Vac
Surge current		A	5 for 1 ms		20 for 10 ms
On StateVoltage drop		V	< 0.5 DC @ 0.5 A		< 0.2 @ 30 Vdc
Protection (short-circuits, overloads)			Outputs electronically protected		Via external 315 mA fast-blow fuse
Response time	On-off maximum	ms	< 0.1		20 @ 60 Hz
	Off-on maximum	ms	< 0.1		10 @ 60 Hz
Potential Isolation	Output to output	V	None		1780 AC for 1 minute
	Output group to output group	V	None		1780 AC for 1 minute
	Field to communication interface	V	500 AC		1780 AC for 1 minute
Power dissipation		W	3.5 typical 4.5 maximum	6.0 typical 7.5 maximum	2.5
Agency approvals			UL, CE, CSA, FM Class I, Div. II	UL, CE, CSA	UL, CE, CSA, FM Class I, Div. II

Type of output base unit			170 ADO 530 50	170 ADO 540 50	170 ADO 730 50	170 ADO 740 50
Number of outputs			2 x 4	2 x 8	2 x 4	2 x 8
Type of output			Triac			
Output voltage		V	120 AC		230 AC	
Operating voltage		V	120 AC (300 for 10 s, 400 for 1 cycle)		230 AC (300 for 10 s, 400 for 1 cycle)	
Internal current		mA	125		65	
Current	Point maximum	A	2	0.5	2	0.5
	Group	A	4			
	Module	A	8			
Min. output current		mA	5	30	5	30
Leakage current		mA	1.9 @ 120 Vac		2.5 @ 230 Vac	2.4 @230 Vac
Surge current		A	Point: 15 (1 cycle), 10 (2 cycles), 5 (3 cycles)			
On StateVoltage drop		V	< 1.5 AC @ 2 A	< 1.5 AC @ 0.5 A	< 1.5 AC @ 2 A	< 1.5 AC @ 0.5 A
Protection (short-circuits, overloads)			Via internal 5 A slow-blow fuse per group			
Response time	On-off maximum	ms	1/2 x 1/f (= 0,5 of one line cycle)			
	Off-on maximum	ms	1/2 x 1/f (= 0,5 of one line cycle)			
Potential Isolation	Output to output		None			
	Output group to output group		None			
	Field to communication interface	V	1780 AC			
Power dissipation		W	6.0 typical 7.5 maximum			
Agency approvals			UL, CE, CSA, FM Class I, Div. II			

Description: page 12
References: page 19
Dimensions, mounting: page 20
Wiring diagrams: pages 20 to 25

Specifications for discrete I/O bases

Type of base unit				170 ADM 350 10	170 ADM 350 11	170 ADM 350 15	170 ADM 390 10
Number of inputs				1 x 16			1 x 16
Number of outputs				2 x 8			1 x 8 and 1 x 4
Operating voltage			**Vdc**	24			
Internal current			**mA**	250 @ 24 Vdc			180 @ 24 Vdc
Inputs	Voltage		**Vdc**	24			
	Type of signal			True high		True low	True high
	Voltage at 1		**Vdc**	+ 11…+ 30		- 3…+ 5	+ 11…+ 30
	Voltage at 0		**Vdc**	- 3…+ 5		+ 4…+ 30	- 3…+ 5
	Input current		**mA**	2.5 min. at state 1 (6 mA at c 24 V),1.2 max. at state 0			
	Input voltage range		**Vdc**	- 3…+ 30			
	Input resistance		**kΩ**	4			
	Response time	Off to on	**ms**	2.2	0.06	2.2 In, < 1 Out	
		On to off	**ms**	3.3	0.08	3.3 In, < 1 Out	
	Fault sensing			–			Broken wire detection
Outputs	Voltage		**Vdc**	24, 30 max.			
	Type			Solid state switch			
	Type of signal			True high		True low	True high
	Current capacity		**A**	0.5 per point 4 per group 8 per module			0.5 per point 4 per group 1 2 per group 2 6 per module
	Leakage current		**mA**	< 1 @ 24 Vdc			< 1 @ 24 Vdc
	Peak current		**A**	5 for 1 ms			–
	On state voltage drop		**Vdc**	< 0.5 @ 0.5 A			–
	Detected error indication			Output overload for at least one output to communication adapter			Output overload for at least one output to communication adapter
	Response time	Off to On	**ms**	< 0.1			
		On to Off	**ms**	< 0.1			
Potential isolation	Input to input			None			
	Output to output group			None			
	Input to output group			None			
	Field to communication interface		**V**	500 AC			
Power dissipation	Typical		**W**	6.0			6.5
	Maximum		**W**	8.0			10.0
Agency approvals				UL, CE, CSA			UL, CE, CSA, FM Class I, Div. II

Description: page 12
References: page 19
Dimensions, mounting: page 20
Wiring diagrams: pages 20 to 25

Specifications for discrete I/O bases

Type of base unit				170 ADM 370 10	170 ADM 850 10
Number of points	**Inputs**			4 x 4	1 x 16
	Outputs			2 x 4	1 x 16
Operating voltage			**Vdc**	24	12, 24, 48 (10…60)
Internal current			**mA**	250 @ 24 Vdc (plus current for sensors)	500 @ 12 Vdc 250 @ 24 Vdc 125 @ 48 Vdc
Inputs	Voltage		**Vdc**	24	12, 24, 48
	Type of signal			True high	
	Voltage at 1		**Vdc**	+ 11…+ 30	> 7.5 @ 12 Vdc > 11 @ 24 Vdc > 30 @ 48 Vdc
	Voltage at 0		**Vdc**	- 3…+ 5	< 2.5 @ 12 Vdc < 5 @ 24 Vdc < 10 @ 48 Vdc
	Input current		**mA**	2.5 min. at state 1 (6 mA at c 24 V), 1.2 max. at state 0	2.3 @ 12 Vdc 2.7 @ 24 Vdc 2.9 @ 48 Vdc
	Input voltage range		**Vdc**	- 3…+ 30	10…60 V
	Input resistance		**kΩ**	4	–
	Response time	Off to On	**ms**	2.2 In, < 1 Out	2.2 In, < 2.5 Out
		On to Off	**ms**	3.3 In, < 1 Out	3.3 In, < 2.5 Out
	Fault sensing			–	
Outputs	Voltage		**Vdc**	24, 30 max.	12, 24, 48, 60 max.
	Type			Solid state switch	
	Type of signal			True high	
	Current capacity		**A**	2 per point 8 per group 16 per module	0.5 per point 8 per group @ 50 °C 7 per module @ 60 °C
	Leakage current		**mA**	< 1 @ 24 Vdc	< 1 @ 60 Vdc
	Peak current		**A**	2.8 for 1 ms	5 for 1 ms
	On state voltage drop		**Vdc**	–	< 1 @ 0.5 A
	Detected error indication			Output overload for at least one output or short-circuit or overload on one of the 4 encoder supply groups, to communication adapter	Output overload for at least one output to communication adapter
	Response time		**ms**	< 0.1 Off to On, < 0.1 On to Off	
Potential isolation	Input to input			None	
	Output to output group			None	
	Input to output group		**V**	None	707 DC
	Field to communication interface		**Vrms**	500 AC	707 DC
Power dissipation	Typical		**W**	6.5	6.0 + (0.144 x nb of input points) + (0.25 x nb of output points)
	Maximum		**W**	10.0	–
Agency approvals				UL, CE, CSA	UL, CE, CSA, FM Class I, Div. II

Description: page 12
References: page 19
Dimensions, mounting: page 20
Wiring diagrams: pages 20 to 25

Specifications for discrete I/O bases

Type of base unit			170 ADM 390 30 / 170 ADM 390 31	170 ARM 370 30
Number of points	**Inputs**		1 x 10	
	Outputs		2 x 4	
Operating voltage		**V**	24 DC	120 AC (47...63 Hz)
Internal current		**mA**	250 @ 24 Vdc	5 minimum load current
Inputs	Voltage	**V**	24...230 AC 20...115 DC	
	Signal type		True High	
	On voltage minimum	**Vdc**	+ 11…+ 30	
	Off voltage maximum	**Vdc**	- 3...+ 5	
	Input current	**mA**	2.5 minimum On, 1.2 maximum Off	
	Input voltage range	**Vdc**	- 3...+ 30	
	Input resistance	**kΩ**	4	
	Response time	**ms**	2.2 Off to On, 3.3 On to Off	
Outputs	Voltage	**V**	24...230 AC, 20...115 DC / 24 Vdc (**170 ADM 390 31** only)	
	Type		Relay normally open	
	Current capacity 24 Vdc	**A**	> 0.005 (new contacts), ohmic load 2 A maximum, inductive load 1 A maximum (LR ≤ 40 ms)	
	Current capacity 115 Vdc	**A**	Ohmic load 0.5 A maximum (switching current ≤ 1.5 A), inductive load 0.15 A maximum (LR ≤ 40 ms)	
	Current capacity Vac	**A**	2 A maximum (switching current ≤ 1.5 A) cosφ = 1 , 1 A maximum cosφ = 0.5	2 A per point, 8 A per group, 16 A per module
	Leakage current	**mA**	< 1 @ 230 Vac	–
	Detected error indication		None	
	Response time	**ms**	10 @ 60 Hz Off to On, 10 @ 60 Hz On to Off	
	Max. number of switching circuits		> 30 x 10^6 (mechanical), > 1 x 10^5 (inductive load with external protection circuit)	
	Protection against short circuit and overload		None	Varistor in parallel with each contact
Potential isolation	Input to Input		None	
	Output group to output Group	**V rms**	None	1780 AC
	Input to output group	**V rms**	None	1780 AC
	Field to communication interface	**V rms**	500 AC	
Fusing	Internal		None	
	External operating voltage		315 mA fast-blow	4 A fast-blow
	External input voltage		max. 4 A fast-blow	None
	External output voltage		According to the supply of the connected actuators not to exceed 8 A slow-blow/group	None
Power dissipation	Typical	**W**	5.5	
	Maximum	**W**	8.5	
Agency approvals			UL, CE, CSA	UL, CE, CSA, FM Class I, Div. II

Specifications for discrete I/O bases

Type of base unit			170 ADM 690 51
Number of points	**Inputs**		1 x 10
	Outputs		1 x 8
Operating voltage		**Vac**	120 (47...63 Hz)
Internal current		**mA**	160 (@ 120 Vac)
Inputs	Voltage	**Vac**	120
	Signal type		True high
	On voltage minimum	**Vac**	74
	Off voltage maximum	**Vac**	20
	Input current	**mA**	6.0 minimum at state 1, 2.6 maximum at state 0
	Input voltage range	**Vac**	74...132
	Input resistance	**kΩ**	4
	Response time	**ms**	Maximum 1/2 x 1/f Off to On, maximum 1/2 x 1/f On to Off
Outputs	Voltage	**Vac**	120…132 (@ 47…63 Hz)
	Type		Triac
	Current capacity		0.5 A per point maximum, 30 mA per point minimum, 2 A per group, 4 A per module
	Leakage current	**mA**	< 1.3 (@ 120 Vac)
	Signal type		True High
	On state voltage drop	**Vac**	< 1.5 (@ 0.5 A)
	Detected error indication		None
	Response time	**ms**	1/2 x 1/f maximum from state 0 to state 1, 1/2 x 1/f maximum from state 1 to state 0
	Maximum switching cycles		3000/hr for 0.5 A inductive load
Potential Isolation	Input to input		None
	Output group to output group		None
	Input to output group		None
	Field to communication interface	**Vrms**	1780 AC
Power dissipation	Typical	**W**	6
	Maximum	**W**	8
Protection	Internal fuses	**A**	2 x 2.5 slow-blow fuses
Agency approvals			UL, CE, CSA

Description: page 12
References: page 19
Dimensions, mounting: page 20
Wiring diagrams: pages 20 to 25

Modicon™ Momentum™ automation platform

Discrete I/O bases

170 ADI ●●0 ●0

170 ADO ●●0 ●0

170 ADM ●●0 ●●

170 XTS 002 00

170 XTS 004 01

170 XTS 008 01

170 XTS 006 01

CER 001

170 BSM 016 00

Discrete input bases

Type of current		Modularity (no. of points)	Conformity EC 1131-2	Reference	Weight kg
DC	24 V	16 (1 x 16)	Type 1	**170 ADI 340 00**	0.190
		32 (2 x 16)	Type 1	**170 ADI 350 00**	0.200
AC	120 V	16 (2 x 8)	Type 2	**170 ADI 540 50**	0.284
	230 V	16 (2 x 8)	Type 2	**170 ADI 740 50**	0.284

Discrete output bases

Type of current	Output voltage	Modularity (no. of points)	Current per output	Reference	Weight kg
DC solid state protected	24 V	16 (2 x 8)	0.5 A	**170 ADO 340 00**	0.210
		32 (2 x 16)	0.5 A	**170 ADO 350 00**	0.210
DC/AC relay form "C"	5…24 Vdc 24…230 Vac	6 isolated	5 A	**170 ADO 830 30**	0.260
AC triac protected, 1 fuse per group	120 V	8 (2 x 4)	2 A	**170 ADO 530 50**	0.320
		16 (2 x 8)	0.5 A	**170 ADO 540 50**	0.284
	230 V	8 (2 x 4)	2 A	**170 ADO 730 50**	0.320
		16 (2 x 8)	0.5 A	**170 ADO 740 50**	0.284

Discrete I/O bases

Type of output current	Input voltage	Output voltage	Modularity		Reference	Weight kg
			Input	Outputs, current		
DC solid state	24 Vdc Type 1+	24 Vdc protected	16 I (1 x 16)	16 O (2 x 8) 0.5 A	**170 ADM 350 10**	0.200
			16 I, fast (1 x 16)	16 O (2 x 8) 0.5 A	**170 ADM 350 11**	0.200
			16 I (1 x 16)	16 O (2 x 8) 0.5 A	**170 ADM 350 15**	0.200
			16 I, wiring check (1 x 16)	12 O (1 x 8 and 1 x 4) 0.5 A	**170 ADM 390 10**	0.260
			16 I (4 x 4)	8 O (2 x 4) 2 A	**170 ADM 370 10**	0.220
DC relay	12…60 Vdc	12…60 Vdc	16 I (1 x 16)	16 O (1 x 16) 0.5 A	**170 ADM 850 10**	–
AC or DC relay	24 Vdc Type 1+	24/230 Vac 20/115 Vdc	10 I (1 x 10)	8 O (2 x 4) 2 A	**170 ADM 390 30** *(1)*	0.260
					170 ARM 390 31 *(2)*	0.260
					170 ARM 370 30 *(3)*	0.260
AC triac	100…120 Vac Type 2	120 Vac	10 I (1 x 10)	8 O (1 x 8) 0.5 A protected by 1 fuse	**170 ADM 690 51**	0.220

Accessories

Description	Composition	Type of connection	Reference	Weight kg
Terminal blocks for I/O base connection Set of 3 connectors	1 row	Screw	**170 XTS 001 00**	–
		Spring	**170 XTS 002 00**	–
Bus Bar	3 rows	Screw	**170 XTS 004 01**	–
		Spring	**170 XTS 003 01**	–
	2 rows	Screw	**170 XTS 005 01**	–
		Spring	**170 XTS 008 01**	–
	1 row	Screw	**170 XTS 006 01**	–
		Spring	**170 XTS 007 01**	–
Cable grounding rail	Used to connect the cable shielding	–	**CER 001**	–
High vibration environment clips	Kit containing 5 sets of clips	–	**170 XTS 120 00**	–
Dummy base unit	Used to prewire the I/O base units Requires screw or spring connection terminals		**170 BDM 090 00**	–
Discrete input simulator	16 channels, 24 Vdc	–	**170 BSM 016 00**	–

Replacement parts

Description	Use	Reference	Weight kg
Sheets of labels	10 front labels for Modicon™ Momentum™ modules	**170 XTS 100 00**	–
Cable coding part kit	For screw or spring connection terminals	**170 XCP 200 00**	–

(1) Operating voltage 24 Vdc.
(2) Output voltage 24 Vdc.
(3) Operating voltage 120 Vac.

Description: page 12
Specifications: pages 13 to 18
Wiring diagrams: pages 20 to 25

Dimensions, mounting

170 AD●, rail or panel mounting

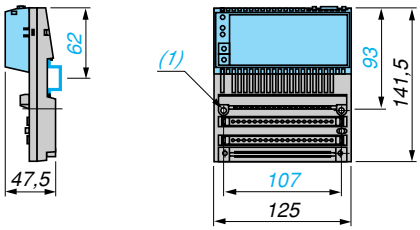

(1) 2 holes for M4 screws, for panel mounting

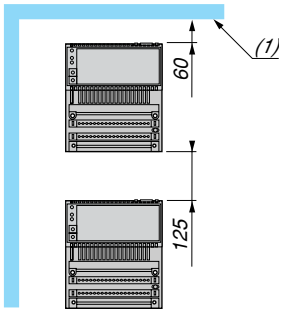

(1) Equipment or enclosure

Wiring diagrams for discrete input bases

170 ADI 340 00

Example of external wiring of 2, 3 and 4-wire sensors

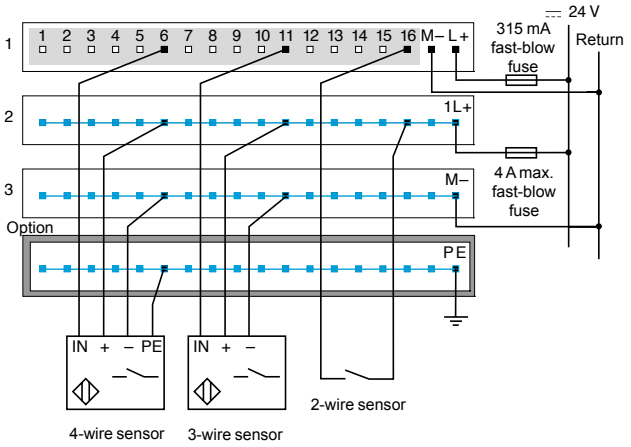

Group of channels

Internal wiring

170 ADI 350 00

Example of external wiring of 2 and 3-wire sensors

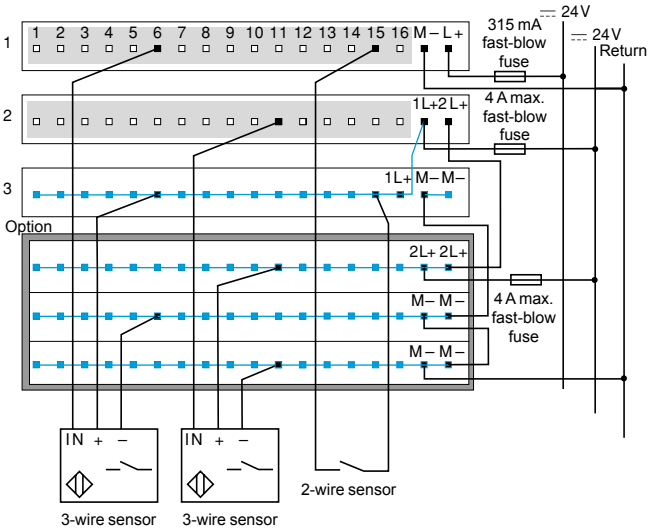

Group of channels

Internal wiring

170 ADI 540 50

Example of external wiring of 2 and 3-wire sensors

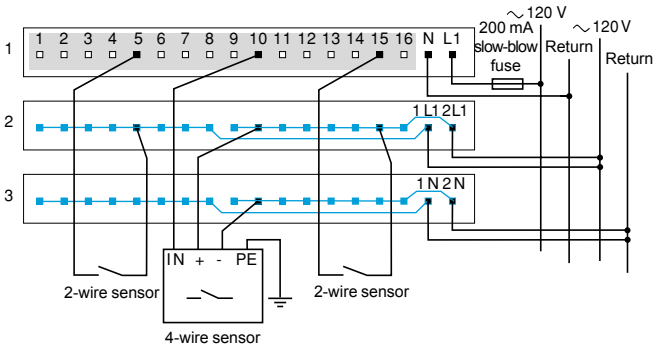

Group of channels

Internal wiring

170 ADI 740 50

Example of external wiring of 2 and 3-wire sensors

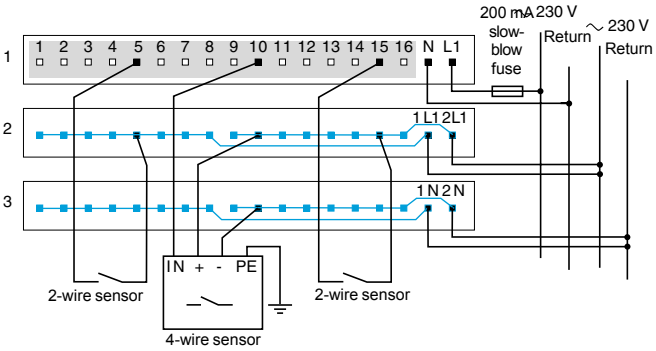

Group of channels

Internal wiring

Description:
page 12

Specifications:
pages 13 to 18

Wiring diagrams for discrete output bases

170 ADO 340 00

Example of external wiring of 2 and 3-wire actuators

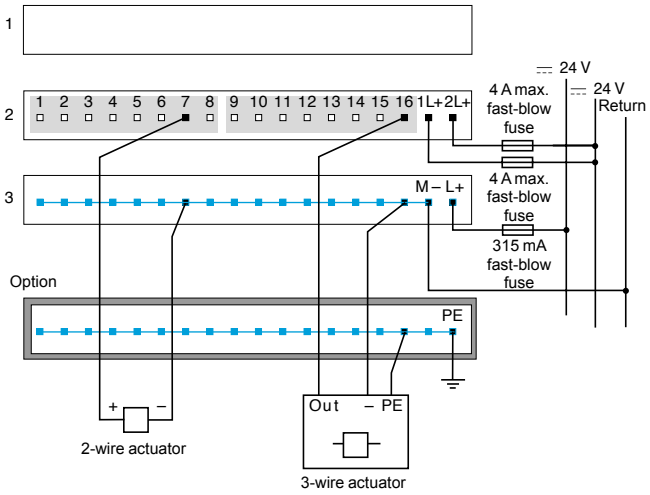

Group of channels

Internal wiring

170 ADO 350 00

Example of external wiring of 2 and 3-wire actuators

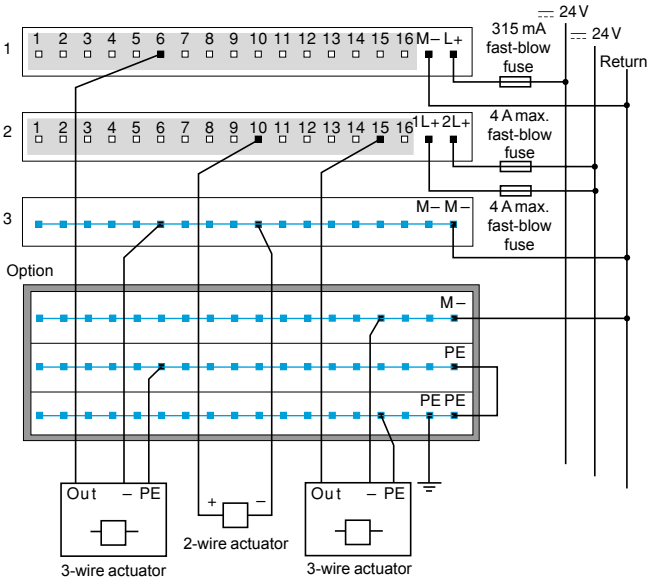

Group of channels

Internal wiring

170 ADO 830 30

Example of external wiring

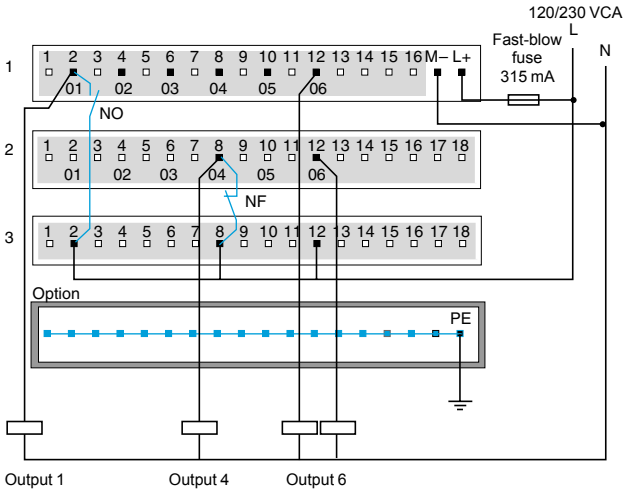

Group of channels

Internal wiring

Wiring diagrams for discrete output bases

170 ADO 530 50/ADO 540 50

Example of external wiring of 2 and 3-wire actuator

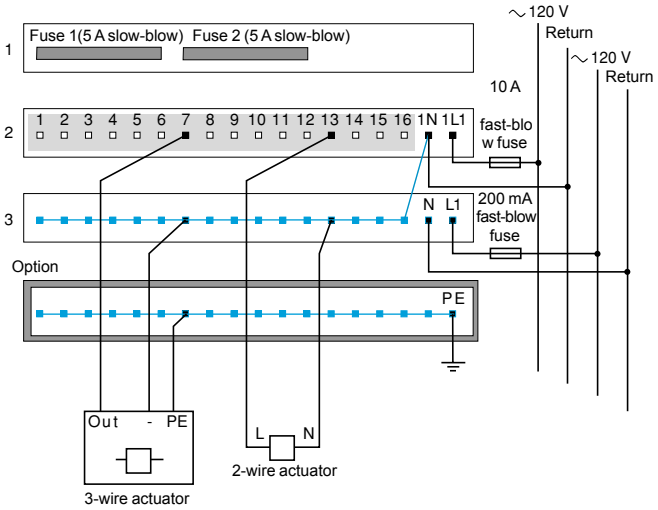

Group of channels

Internal wiring

170 ADO 730 50/ADO 740 50

Example of external wiring of 2 and 3-wire actuators

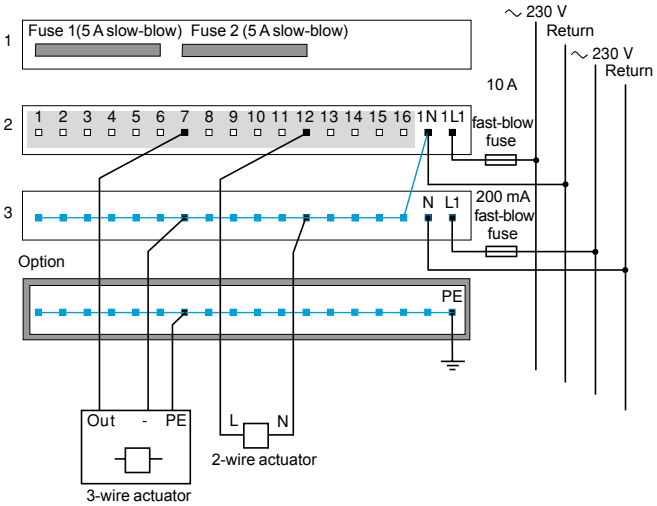

Group of channels

Internal wiring

Wiring diagrams for discrete I/O bases

170 ADM 350 10/ADM 350 11/ADM 350 15

Example of external wiring of a 2-wire sensor/actuator

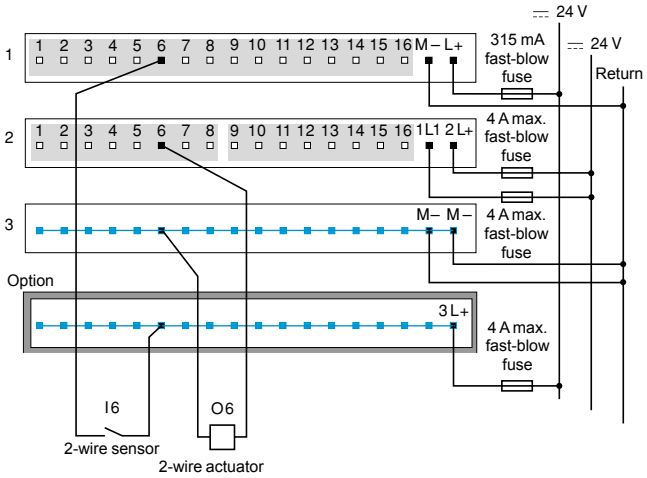

Group of channels

Internal wiring

Example of external wiring of a 3-wire actuator with wiring check

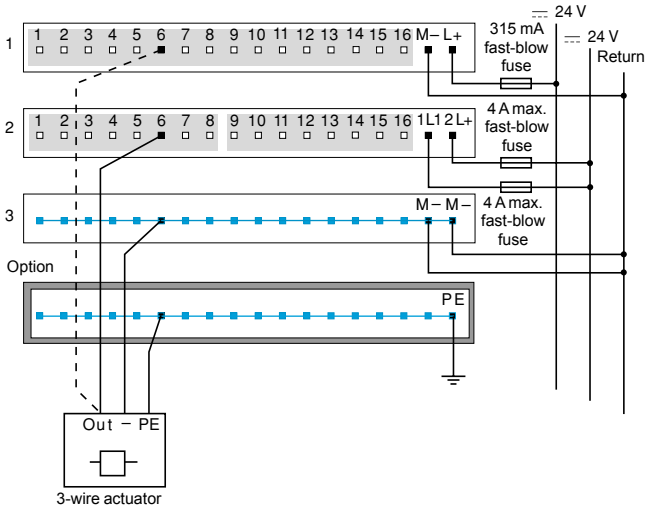

Group of channels

Internal wiring

Example of external wiring of a 4-wire sensor activated by an output

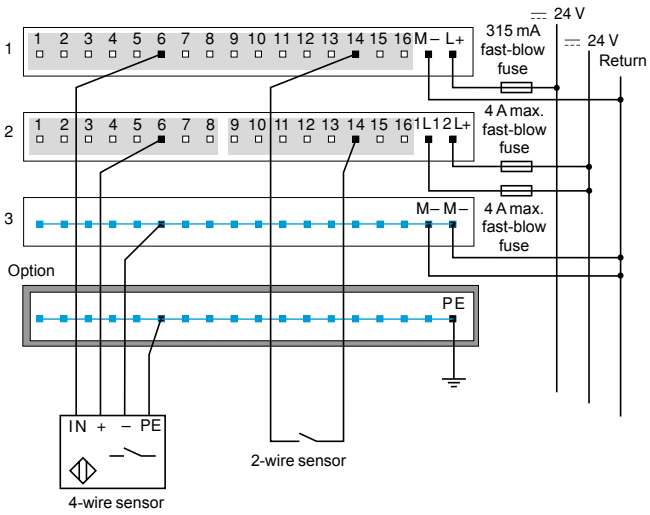

Group of channels

Internal wiring

Example of external wiring of a 4-wire sensor/2-wire actuator

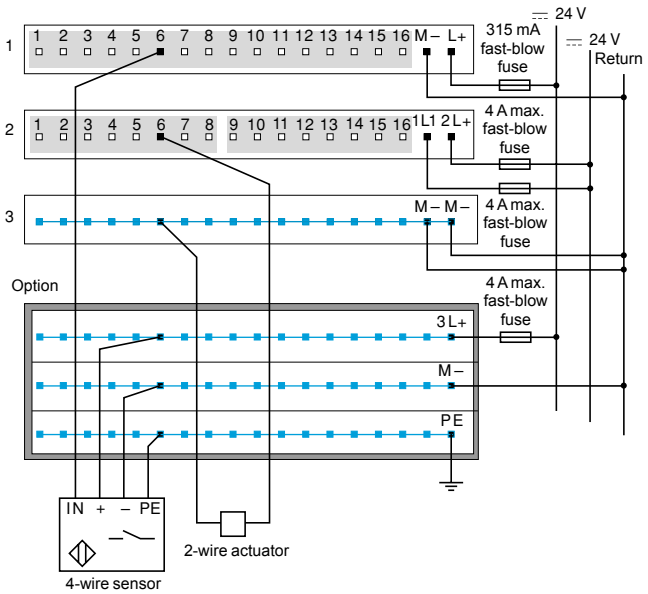

Group of channels

Internal wiring

Wiring diagrams for discrete I/O bases

170 ADM 390 10

Example of external wiring of 2-wire sensor/actuator

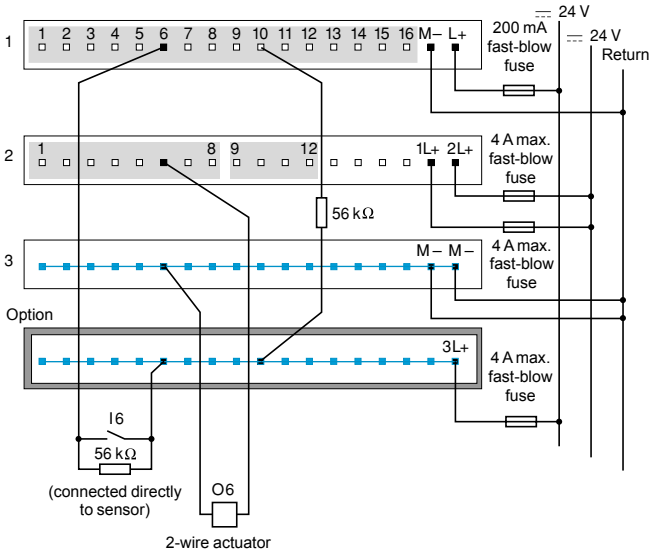

Group of channels

Internal wiring

170 ADM 370 10

Example of external wiring of 2 and 4-wire sensors/2-wire actuator

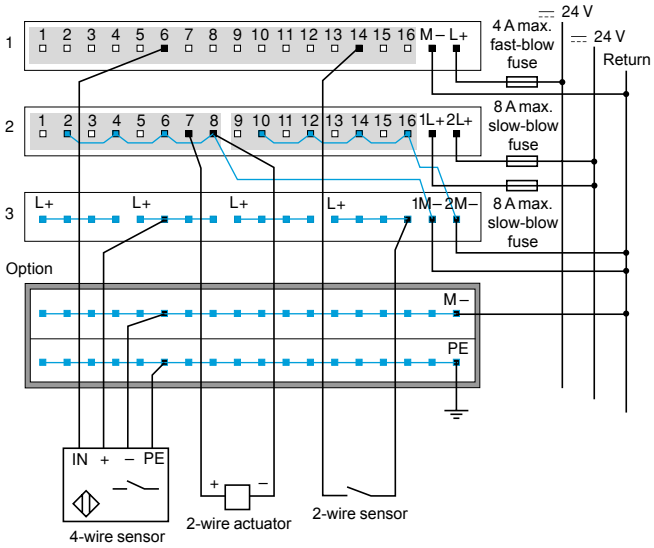

Group of channels

Internal wiring

170 ADM 370 10 (continued)

Example of external wiring of 3-wire actuator with wiring check

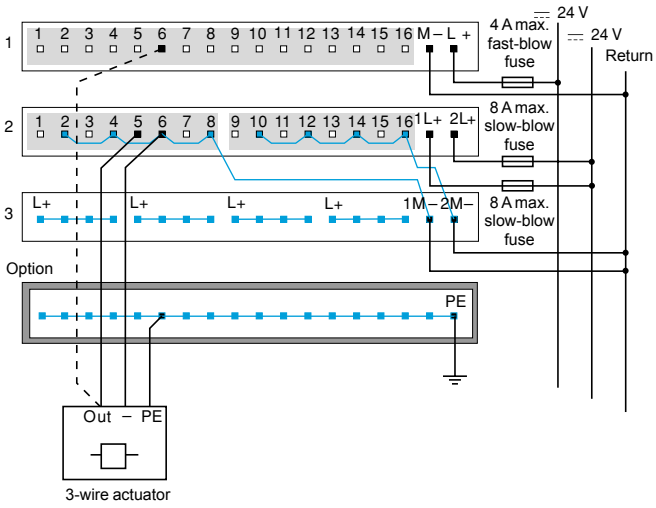

Group of channels

Internal wiring

Special external wiring, the output activates the sensor

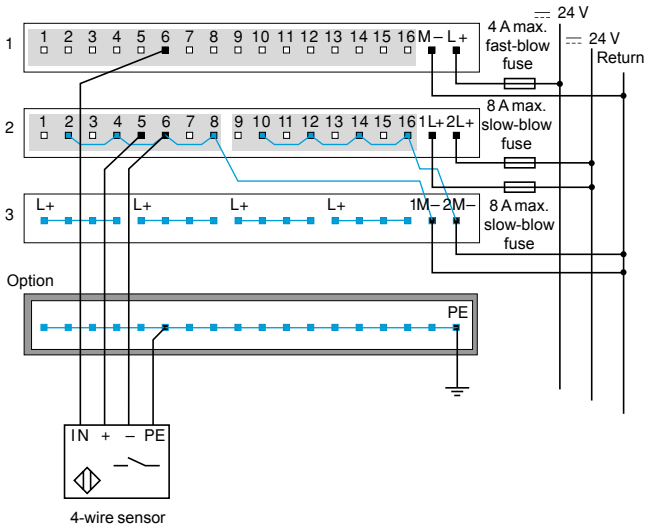

Group of channels

Internal wiring

Wiring diagrams for discrete I/O bases

170 ADM 850 10

Example of external wiring of:
- 4-wire sensor
- 2-wire actuator
- 3-wire actuator with wiring check
- 2-wire sensor actived by output

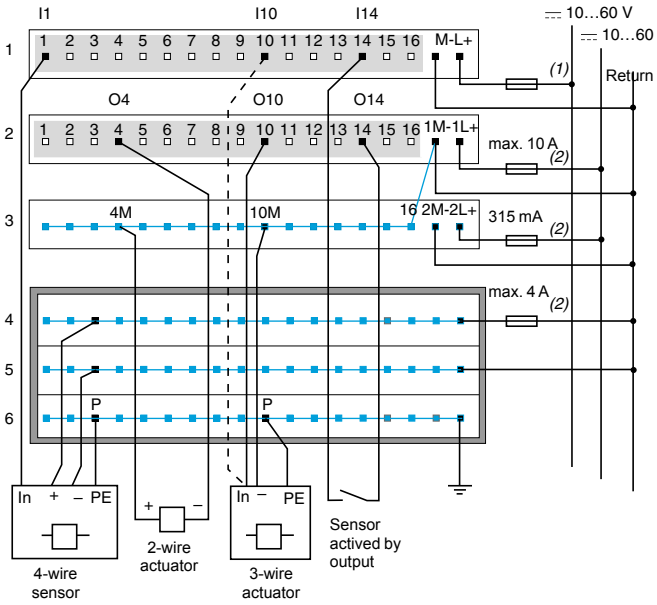

Group of channels

Internal wiring

(1) Fast-blow fuse: 12 V: 630 mA, 24 V: 315 mA, 48 V: 200 mA.
(2) Fast-blow fuse.

170 ADM 390 30 / 170 ADM 390 31

Example of external wiring of 3 or 4 sensor/3-wire/actuator

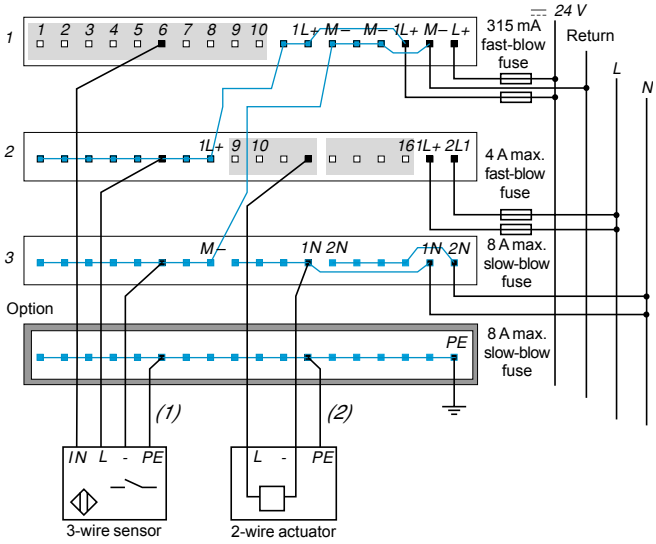

Group of channels

Internal wiring

(1) For 4-wire sensor
(2) For 3-wire actuator

170 ARM 370 30

Example of external wiring of 4-wire sensor/3-wire actuator

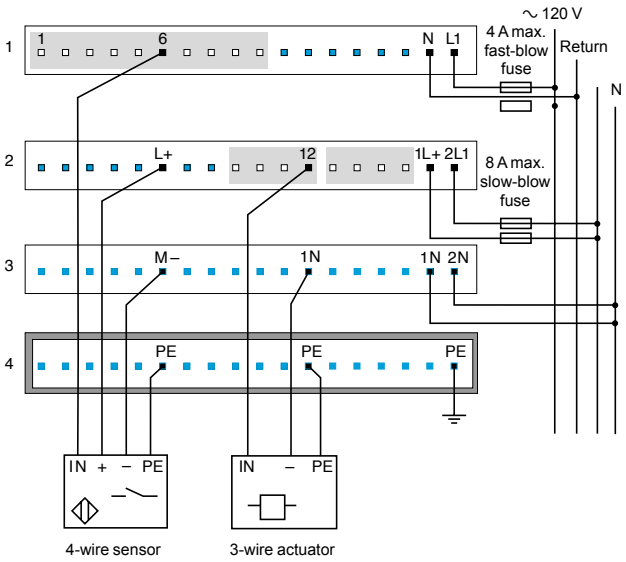

Group of channels

Internal wiring

170 ADM 690 51

Example of external wiring of 4-wire sensor/2 and 3-wire actuators

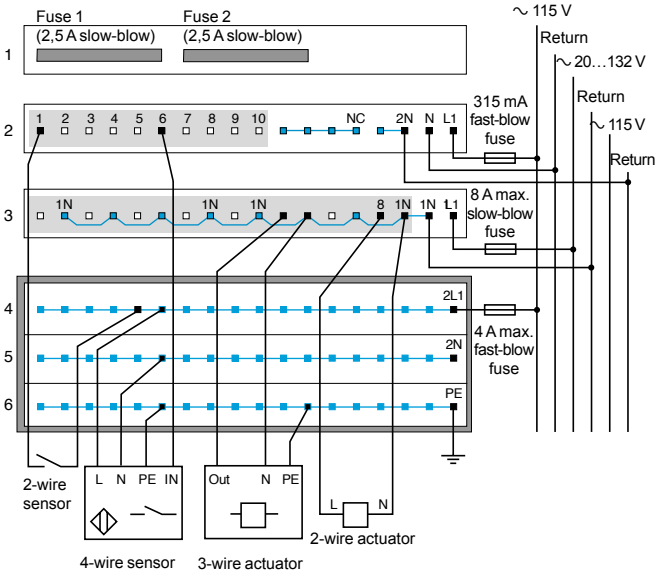

Group of channels

Internal wiring

Modicon™ Momentum™ automation platform

Analog I/O bases

Applications		24 Vdc analog input bases		
Operating voltage		24 Vdc		
Measurement range		Inputs ± 5 V, ± 10 V, ± 20 mA 1-5 V, 4-20 mA	Inputs ± 5 V, ± 10 V, 4-20 mA	Inputs ± 25 mV, ± 100 mV, Temperature probe Pt 100, Pt 1000, Ni 100, Ni 1000 Thermocouple B, E, J, K, N, R, S, T
Modularity	Input channels	8 differential inputs	16 single-ended inputs	4 differential inputs
	Output channels	–	–	–
	Discrete I/O	–	–	–
Resolution		14 bits + sign bipolar 15 bits unipolar	12 bits + sign	15 bits + sign
Update time		1.33 + 1.33 x no. of declared channels (ms)	1 + 1.5 x no. of declared channels (ms	500 ms
Potential isolation	Between channels	200 Vdc, 1 min	None	400 Vdc
	Base and ground	500 Vdc, 1 min	500 Vdc, 1 min	500 Vdc, 1 min
	Channels and ground	500 Vac, 1 min	1780 Vac, 1 min	500 Vac
Protection		Polarity inversion		
Number in words	In	8 words in	16 words in	4 words in
	Out	2 words out	4 words out	4 words out
Fail states		–		
Type of communicating module		170 AAI 030 00	170 AAI 140 00	170 AAI 520 40
Pages		34		

24 Vdc analog output bases		24 Vdc mixed I/O bases (analog/discrete)			
24 Vdc			12 Vdc	24 Vdc	
Outputs ± 10 V, 0-20 mA	Outputs ± 10 V, 4-20 mA	Inputs ± 5 V, ± 10 V, ± 20 mA 1-5 V, 4-20 mA Outputs ± 10 V, 0-20 mA		Inputs 0…10 V Outputs 0…10 V	Inputs - 10…+ 10 V Outputs - 10…+ 10 V
–		4 differential inputs		6 inputs with common point	
4 outputs		2 outputs		4 outputs with common point	
–		4 inputs 24 Vdc 2 outputs 24 Vdc/0.5 A	4 inputs 12 Vdc 2 outputs 12 Vdc/1 A	8 inputs 24 Vdc 8 outputs 24 Vdc/0.25 A	
12 bits + sign		Inputs: 12…14 bits (dep. on range) Outputs: 12 bits		Inputs: 14 bits Outputs: 14 bits	
2 ms		Inputs: 10 ms Outputs: 1 ms		Inputs: 0.75 ms (for 6 inputs) Outputs: 1.2 ms (for 4 inputs)	
None		None			
500 Vdc, 1 min		500 Vac, 1 min			
500 Vac, 1 min		500 Vac, 1 min			
Polarity inversion		Short-circuits and overloads (for discrete outputs)			
–		5 words in	5 words in	12 words in	
5 words out		5 words out	5 words out	12 words out	
Hold, reset to zero, reset to full scale		Hold or reset to zero			
170 AAO 120 00	**170 AAO 921 00**	**170 AMM 090 00**	**170 AMM 090 01**	**170 ANR 120 90**	**170 ANR 120 91**
34					

Modicon™ Momentum™ automation platform

Analog I/O bases

Introduction

Modicon™ Momentum™ analog input bases enable acquisition of various analog values encountered in industrial applications, including:
- Standard high level (± 5 V, ±10 V, 1-5 V, 4-20 mA, ± 20 mA)
- Low level (± 25 mV, ± 100 mV)
- Thermocouples (B, E, J, ...)
- Temperature probes (Ni ..., Pt ...)

Analog output bases are used to control analog field devices such as: speed drives and proportional control valves. The current or the voltage is proportional to the digital value defined by the user program. The outputs can be configured so that when the program stops, the outputs either reset to zero or hold the last value received. This feature is useful during debugging because, if the outputs are set to "Hold", the operation of the analog field devices is not disturbed every time the program stops.

Designed to cover a wide range of applications, Modicon Momentum I/O bases offer the following functions in addition to A/D or D/A conversion:
- Choice of input/output ranges (voltage, current, thermocouple, temperature probes)
- Selection of number of channels used
- Cold junction compensation for thermocouple modules
- Broken wire detection (**170 AAI 030 00**, **170 AAI 140 00** and **170 AAI 520 40** models)

Description

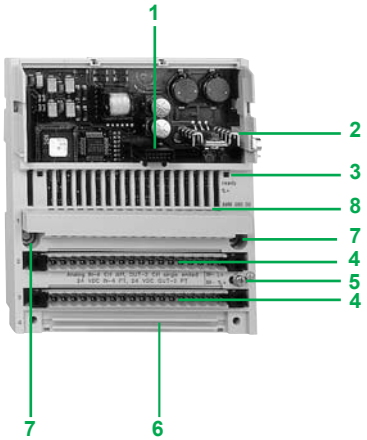

170 A●● analog I/O base units feature the following on the front panel:
1 Internal interface connector for the communication module or processor module
2 Locking and ground contact for the communication module or processor module
3 LED status indicators (the number of indicators will depend on the number of channels)
4 Two connectors for the removable terminal blocks
5 Grounding screw
6 Slot for the power strip
7 Two screw holes for panel mounting
8 Protective cover

Connectors to be ordered separately:
- removable screw or spring terminal blocks **170 XTS 00● 00**
- 1 to 3-row screw or spring bus bar **170 XTS 00● 01**

Specifications for analog input bases

Type of base units			170 AAI 030 00				
Number of inputs			1 x 8 differential imputs				
LEDs			Ready (green)				
Format of data			Full 16 bits signed (2's complement)				
Protection	Base and actuators		Polarity inversion				
Ranges			**± 10 Vdc**	**± 5 Vdc**	**4…20 mA**	**± 20 mA**	**1…5 Vdc**
	Input impedance	**kΩ**	> .1000	> .1000	250	250	> .1000
	Maximum variation at 25 °C	**%**	0.27	0.21	0.27	0.32	0.13
	Maximum variation at 60 °C	**%**	0.32	0.26	0.38	0.41	0.19
	Resolution		14 bits + sign bipolar 15 bits unipolar				
Conversion times		**ms**	12 ms max. for 8 input channels (1.33 ms per input channel + 1.33 ms)				
Error indication			None				
Isolation	Channel to channel	**Vdc**	± 200 for 1 minute				
	Field to ground	**Vdc**	500 for 1 minute				
	Communication adapter to ground	**Vac**	500 for 1 minute				
Common mode rejection	Channel to ground		250 Vac @ 47…63 Hz or 100 Vdc				
Crosstalk between channels		**dB**	⩾ 80				
External power requirement	Nominal	**Vdc**	24				
	Limit values	**Vdc**	20.4 to 28.8				
	Current	**mA**	< 382 @ 24 Vdc				
EMC for industrial environment	Immunity		IEC 1131 surge on auxiliary power supply 2 kV				
	Emissions		EN 50081-2				
	Approvals		UL, CSA, CE				

References :
pages 34 and 35

Dimensions :
page 35

Wiring diagrams :
pages 36 and 37

Specifications for analog input bases

Type of base units			170 AAI 140 00			170 AAI 520 40	
Number of inputs			1 x 16 single-ended input			1 x 4 differential inputs	
Format of data			Full 16 bits signed (2's complement)				
Protection	Base and actuators		Polarity inversion				
Error indication			None				
Ranges			**± 10 V**	**± 5 V**	**4…20 mA**	**± 25 mV**	**± 100 mV**
	Input impedance	kΩ	> 2200	> 2200	< 0.250	> 10000	> 10000
	Maximum variation at 25 °C		0.15 % FS	0.15 % FS	0.25 % FS	± 21 µV	± 27 µV
	Maximum variation at 60 °C		0.25 % FS	0.25 % FS	0.45 % FS	± 46 µV	± 94 µV
	Temperature drift (60 °C)	‰	30 PE / °C	30 PE / °C	60 PE / °C	–	
	PE (Full scale)		10 V	5 V	16 mA	–	
	Resolution		12 bits + sign	12 bits + sign	12 bits	15 bits + sign	
	Filtering		Low pass with cut-off frequency 10 kHz			–	
Current source	Pt100	mA	–			–	0.125
	Ni100	mA	–			–	0.125
	Pt1000	mA	–			0.125	–
	Ni1000	mA	–			0.125	–
Update time		ms	1 + 1.5 x n n = number of declared channels			500	
Error indication			None				
Potential isolation	Channel to channel	Vdc	None			400	
	Base power supply and ground	Vdc	500 for 1 minute			500 for 1 minute	
	Channels to ground	Vac	1780 for 1 minute			500 for 1 minute	
	Base power	V	± 30 (voltage or current output)			± 30 (voltage or current output)	
	Common mode Channel to ground	V	–			± 100 DC, 250 AC	
	Common mode Voltage between channels	V	–			200 DC, 115 AC single phase or 3-phase or 250 AC single phase	
Common mode rejection	Channel to ground		250 Vac at 47…63 Hz or 100 Vdc			135 dB DC, 145 dB AC 50 Hz, 155 dB AC 60 Hz	
	Between channels		–			120 dB DC, 130 dB AC 50 Hz, 140 dB AC 60 Hz	
Serial mode rejection			–			35 dB AC 50 Hz, 45 dB AC 60 Hz	
Input protection			Polarity inversion				
Operating voltage		Vdc	24				
Internal current		mA	305 @ 24 Vdc				
Power dissipation	Typical	W	4.95			3.5	
	Maximum	W	5.55			5.5	
Fusing	Internal		2 A slow-blow			2 A slow-blow	
	External		500 mA fast-blow			500 mA fast-blow	
Agency approvals			UL, CE, CSA, FM Class I, Div. II				

References :
pages 34 and 35

Dimensions :
page 35

Wiring diagrams :
pages 36 and 37

Specifications for analog output bases

Type of base units			170 AAO 120 00		170 AAO 921 00	
Number of outputs			1 x 4			
Format of data			Full 16 bits signed (2's complement)			
Protection	Base and actuators		Polarity inversion			
Ranges			**± 10 V**	**0…20 mA**	**± 10 V**	**4…20 mA**
	Load impedance	**kΩ**	1 minimum	0.6 maximum	1 minimum	0.6 maximum
	Capacitive load	**µF**	< 1			
	Maximum variation at 25 °C	**%**	0.2 PE	0.3 PE	0.2 PE	0.4 PE
	Maximum variation at 60 °C	**%**	0.25 PE	0.4 PE	0.25 PE	0.5 PE
	Temperature drift (60 °C)	**‰**	10 PE / °C	30 PE / °C	10 PE / °C	30 PE / °C
	Resolution		12 bits + sign			
	Update time	**ms**	< 2			
Full scale			10 V in the range of ± 10V 2 mA in the range of 0…20 mA			
Fail State			Hold, reset to zero, reset to full scale			
Potential isolation	Channel to channel		None			
	Base power supply and ground	**Vdc**	500 for 1 minute			
	Channels to ground	**Vac**	500 for 1 minute			
	Outprotections		Short-circuits in the voltage circuits, open in current polarity inversion			
	Base power	**V**	± 30 (voltage or current output)			
Common mode rejection		**Vac**	250 @ 47…63 Hz or 250 DC channel to ground			
Operating voltage		**Vdc**	24			
Internal current	Base	**mA**	530 @ 24 Vdc			
	Actuators	**mA**	150 @ 24 Vdc			
Power dissipation	Typical	**W**	5.6			
	Maximum	**W**	8.5			
Internal fusing		**A**	2, slow-blow			
Agency approvals			UL, CE, CSA			

References :
pages 34 and 35

Dimensions :
page 35

Wiring diagrams :
pages 36 and 37

Specifications for discrete and analog I/O bases

Type of base unit			170 AMM 090 00				170 AMM 090 01
Number of inputs and outputs			1 x 4 differential inputs 1 x 4 discrete inputs 1 x 2 analog outputs 1 x 2 discrete outputs				
Operating voltage		**Vdc**	24				12
Internal current		**mA**	200 typical (at 24 Vdc), 350 maximum (at 24 Vdc)				700 maximum (at 12 Vdc)
Differential inputs for 170 AMM 090 00/090 01	Conversion time		10 ms for all channels				
	Conversion tolerance		**± 10 V**	**± 5 V**	**1…5 V**	**± 20 mA**	**4…20 mA**
	25 °C	**%**	0.08	0.16	0.16	0.16	0.16
	60 °C	**%**	0.15	0.3	0.3	0.3	0.3
	Resolution		14 bits	13 bits	12 bits	13 bits	12 bits
	Conversion consistency	**%**	± 0.02	± 0.04	± 0.04	± 0.04	± 0.04
	Common mode voltage		Input voltage starting at Ag ± 11 V				
	Common mode suppression	**dB**	> 54				80
	Overvoltage Voltage ranges	**V**	± 30 solid state if voltage is 24 V ± 50 dynamic max. 100 ms				± 30 solid state if voltage is 12 V ± 50 dynamic max. 100 ms
	Overvoltage current ranges	**mA**	–			> 48	
	Input resistance	**Ω**	1 M			250	
	Fail state		Hold or reset to zero				
Discrete inputs	Voltage	**Vdc**	24 typical, 30 maximum				12 typical
	Signal Type		True high				
	On Voltage	**Vdc**	+ 11…+ 30				+ 7.5…+ 15
	Off Voltage	**Vdc**	- 3…+ 5				- 1.5…+ 2.5
	Input current	**mA**	2.5 minimum at state 1 (6 mA at operating voltage), 1.2 maximum at state 0				
	Input resistance	**kΩ**	4				2.1
	Response time	**ms**	2.2 from 0 to state 1 3.3 from 1 to state 0				
Analog outputs	Resolution		12 bits for single-phase measuring range 0…20 mA, 12 bits for 2-phase measuring range ± 10 V				
	Conversion time	**ms**	1 for all channels				
	Conversion maximum variation 25 °C		max. ± 0.35 % of upper measuring range value				
	Conversion maximum variation 60 °C		max. ± 0.70 % of upper measuring range value				
	Output load		⩾ 3 kΩ for voltage output, ⩽ 600 Ω for current output				
Discrete outputs	Voltage	**Vdc**	24 typical, 30 maximum				
	Type		Semiconductor				
	Signal Type		True high				
	Current capacity		1 per channel, 2 per group, 2 per module				
	Leakage current	**mA**	< 1 @ 24 Vdc				< 1 @ 12 Vdc
	On State Voltage drop	**Vdc**	< 0.5 @ 1 A				< 0.5 @ 0.5 A
	Response time Off to On	**ms**	< 0.1				
	Response time On to Off	**ms**	< 0.1				
	Output protection		The outputs are protected against overload and short-circuit-circuiting				
	Output indicator		1 red LED per “On” output in the event of an overload or short-circuit-circuiting				
	Error message		Message “I/O error” on bus adapter if module is defective				
	Max. Switching cycles		1000/hr (inductive load 1 A), 100/s (resistive load 1 A), 8/s (filament load 2.4 W)				
Potential isolation	Discrete input and output		None				
	Analog input to output		None				
	Analog input and output and to operating voltage	**Vac**	500 for 1 minute				
	Operating voltage and inputs and outputs from ground	**Vac**	500 for 1 minute				
Power dissipation	Typical	**W**	4.0				
	Maximum	**W**	6.0				
Agency approvals			UL, CE, CSA, FM Class I, Div. II				UL, CE, CSA

References :
pages 34 and 35

Dimensions :
page 35

Wiring diagrams :
pages 36 and 37

Specifications for discrete and analog I/O bases

Type of base unit				170 ANR 120 90	170 ANR 120 91
Number of inputs and outputs				1 x 6 analog inputs 2 x 4 discrete inputs 1 x 4 analog outputs 1 x 8 discrete outputs	
Operating voltage			**Vdc**	24, range 19.2...30	
Internal current			**mA**	400 @ 24 Vdc	
Analog inputs	Resolution			14 bit	
	Input range		**Vdc**	0...10	- 10...+ 10
	Input type			Single-ended	
	Conversion time			0.75 ms maximum for 6 input channels	
	Conversion tolerance			0.2 % @ 25 °C for 0 - 10 Vdc inputs	
	Max input signal		**Vdc**	15 for voltage input	
	Max temperature drift		**Vdc**	10 inputs	
	Input resistance		**MΩ**	>1 for voltage inputs	
Discrete inputs	Voltage		**Vdc**	24	
	Configuration			2 groups of 4 inputs	
	Signal Type			True high	
	Minimum on voltage		**Vdc**	> 11	
	Maximum off voltage		**Vdc**	< 5	
	Input current	Minimum On	**mA**	6	
		Maximum Off	**mA**	2	
	Input voltage	Range	**Vdc**	+ 3...+ 32	
		Surge	**Vdc**	45 peak for 10 ms	
	Response time	Off to On	**ms**	1.2,	
		On to Off	**ms**	1.2	
Analog outputs	Resolution			14 bit	
	Output range		**Vdc**	0...10	- 10...+ 10
	Conversion time		**ms**	1.20 for four channels	
	Conversion tolerance			max. + 0.4 % of upper measuring range value @ 25 °C	
	Output load			> 2 kΩ minimum @ 0...10 Vdc	
	Fail state			Hold or reset to zero	
Discrete outputs	Voltage		**Vdc**	10-30 operating, 50 for 1 ms maximum	
	Type			Solid State Switch	
	Signal type			True high	
	Current capacity		**A**	0.25 per point, 2 per group, 2 per module	
	Leakage current		**mA**	0.4 @ 30 Vdc	
	Surge current		**A**	2.5 for 1 ms	
	On state voltage drop		**Vdc**	< 0.4 @ 0.25 A current	
	Response time	Off to On	**ms**	1.2	
		On to Off	**ms**	1.05	
	Output protection			The Outputs are protected against overload and short-circuiting	
	Output indicator			1 LED per point	
Potential isolation	Discrete input to output			None	
	Analog input to output			None	
	Analog input and output to operating voltage		**Vac**	500 for 1 minute.	
	Operating voltage and inputs and outputs from ground		**Vac**	500 for 1 minute	
Power dissipation	Typical		**W**	4.0	
	Maximum		**W**	6.0	
Agency approvals				UL, CE, CSA	

References :
pages 34 and 35

Dimensions :
page 35

Wiring diagrams :
pages 36 and 37

Modicon™ Momentum™ automation platform

Analog I/O bases

170 AAI ●●0 ●0

170 AAO ●2● 00

170 AAM 090 00

Analog input bases

Type of inputs	Number of channels	Ranges	Reference	Weight kg
12 bits + sign	16 single-ended	± 5 V, ± 10 V, 4-20 mA	**170 AAI 140 00**	0.215
15 bits + sign	4, differential	Pt 100, Pt 1000, NI 100 thermocouples B, E, J, K, N, R, S, T	**170 AAI 520 40**	0.215
	8, differential	± 5 V, ± 10 V, 1-5V ± 20 mA, 4-20 mA	**170 AAI 030 00**	0.215

Analog output bases

Type of outputs	Number of channels	Ranges	Reference	Weight kg
12 bits + sign	4	± 10 V, 0-20 mA	**170 AAO 120 00**	0.215
		± 10 V, 4-20 mA	**170 AAO 921 00**	0.215

Discrete and analog I/O bases

Type		Ranges		Reference	Weight kg
Inputs	Outputs	Inputs	Outputs		
4 differential analog 13 bits + sign	**2 analogs** 12 bits	± 5 V, ± 10 V 1-5 V ± 20 mA 4-20 mA	0-20 mA ± 10 V	**170 AMM 090 00**	0.240
4 discretes	**2 discretes 0.5 A**	24 Vdc	24 Vdc		
4 differential analog 13 bits + sign	**2 analogs** 12 bits	± 5 V, ± 10 V 1-5 V ± 20 mA 4-20 mA	0-20 mA ± 10 V	**170 AMM 090 01**	0.240
4 discretes	**2 discretes 0.5 A**	12 Vdc	12 Vdc		
6 analog 14 bits	**4 analogs** 14 bits	0-10 V	0-10 V	**170 ANR 120 90**	0.240
2 x 4 discretes	**1 x 8 discretes 0.25 A**	24 Vdc	24 Vdc		
6 analog 14 bits	**4 analogs** 14 bits	± 10 V	± 10 V	**170 ANR 120 91**	0.240
2 x 4 discretes	**1 x 8 discretes 0.25 A**	24 Vdc	24 Vdc		

Specifications : pages 29 to 33
Dimensions : page 35
Wiring diagrams : pages 36 and 37

Schneider Electric

Modicon™ Momentum™ automation platform

Analog I/O bases

170 XTS 001 00

170 XTS 002 00

170 XTS 004 01

170 XTS 005 01

170 XTS 008 01

170 XTS 006 01

CER 001

Accessories

Description	Composition	Type of connection	Reference	Weight kg
Terminal blocks	Set of 3 connectors 1 row	Screw	**170 XTS 001 00**	–
		Spring	**170 XTS 002 00**	–
Bus Bar	3 rows	Screw	**170 XTS 004 01**	–
		Spring	**170 XTS 003 01**	–
	2 rows	Screw	**170 XTS 005 01**	–
		Spring	**170 XTS 008 01**	–
	1 rows	Screw	**170 XTS 006 01**	–
		Spring	**170 XTS 007 01**	–
Cable Grounding Rail	Used to connect the cable shielding		**CER 001**	–
High vibration environment clips	Used to prewire the I/O base units. Requires screw or spring connection terminals		**170 BDM 090 00**	–

Replacement parts

Description	Use	Reference	Weight kg
Sheets of labels	10 front labels for Modicon™ Momentum™ modules	**170 XTS 100 00**	–
Set of codingand locating device	For screw or spring connection terminals	**170 XCP 200 00**	–

Dimensions, mounting

170 A●●

Rail or panel mounting

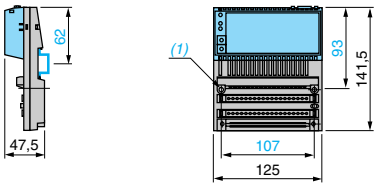

(1) 2 holes for M4 screws, for panel mounting.

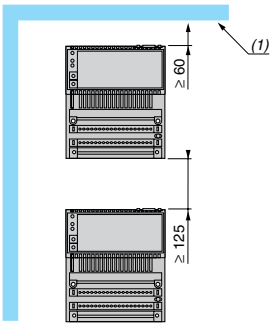

(1) Equipment or enclosure.

Specifications : pages 29 to 33

Wiring diagrams : pages 36 and 37

Wiring diagrams for analog input bases and analog output bases

170 AAI 030 00

Example of external wiring of 2-wire sensor

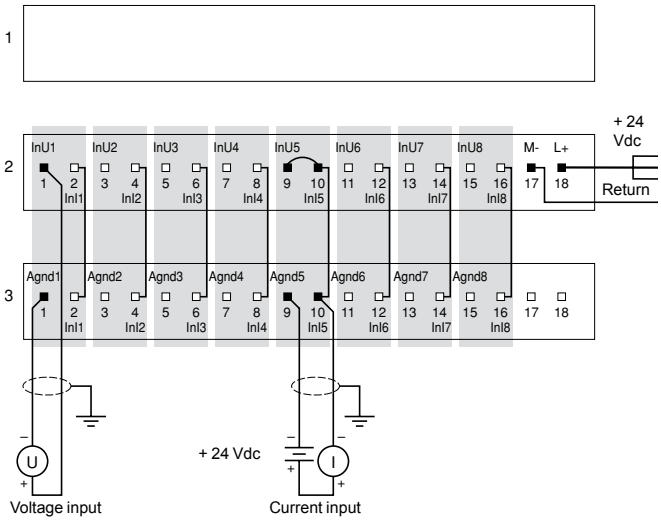

170 AAI 140 00

Example of external wiring of 2-wire sensor

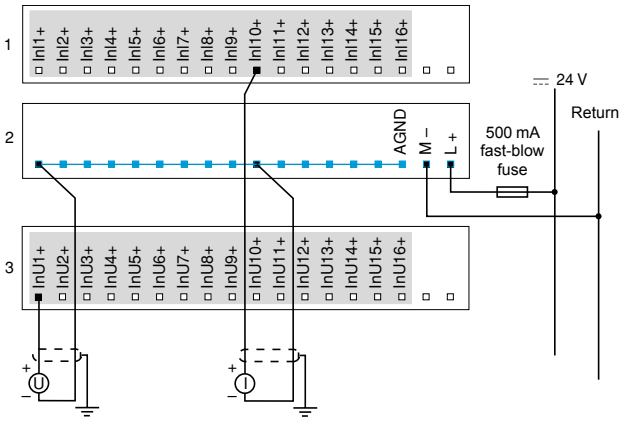

Group of channels

Internal wiring

170 AAI 520 40

Example of external wiring of sensor

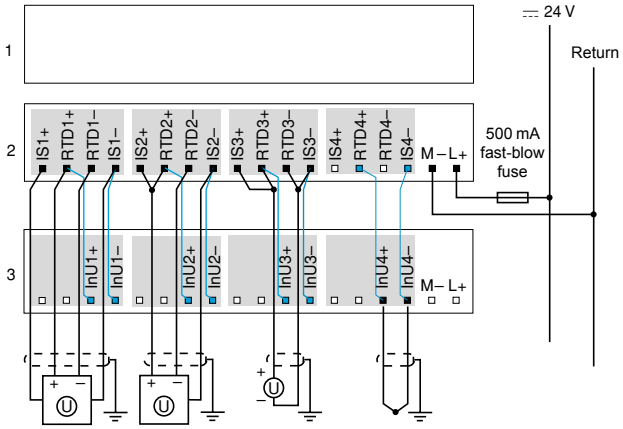

Group of channels

Internal wiring

170 AAO 120/921 00

Example of external wiring of 2-wire actuator

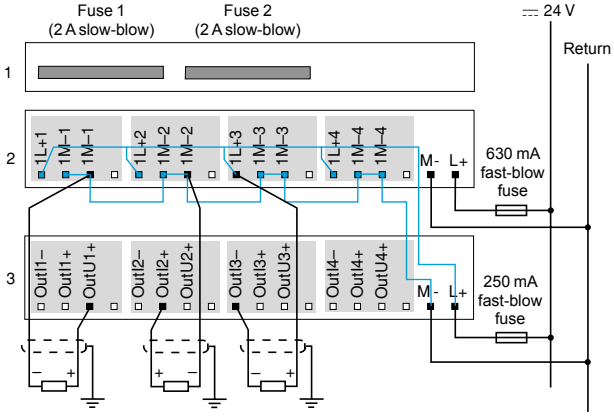

Group of channels

Internal wiring

Wiring diagrams for discrete and analog bases

170 AMM 090 00/AMM 090 01

Example of external wiring of 2-wire sensor

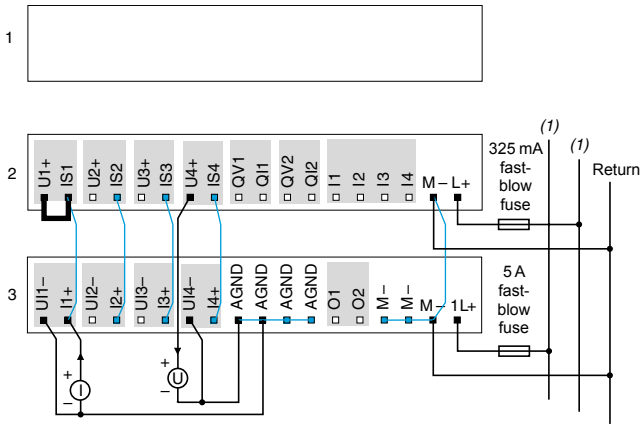

Example of external wiring of 2-wire actuator

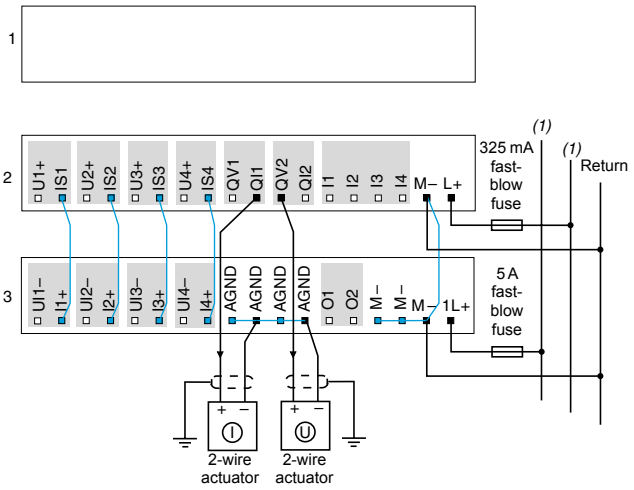

External bridge

Group of channels

Internal wiring

170 AMM 090 00/AMM 090 01 (continued)

Example of external wiring of digital sensor/actuator

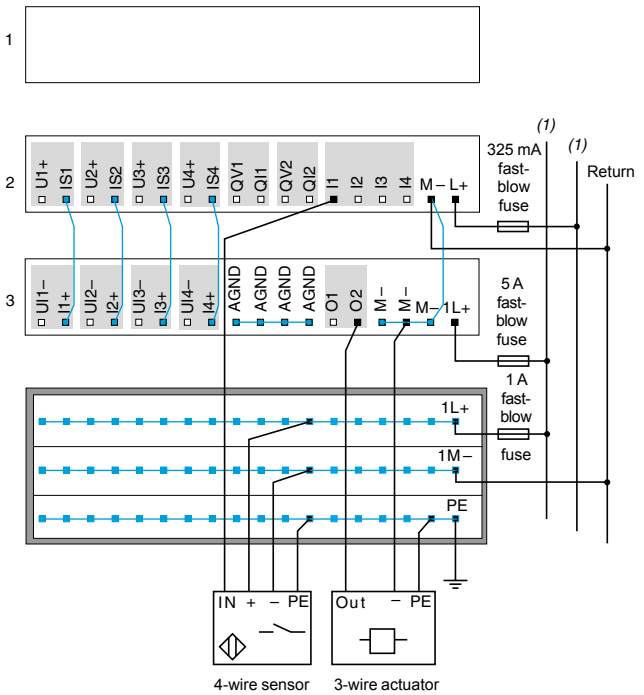

Group of channels

Internal wiring

170 ANR 120 90/91

Example of mixed discrete and analog I/O sensor/actuator field wiring

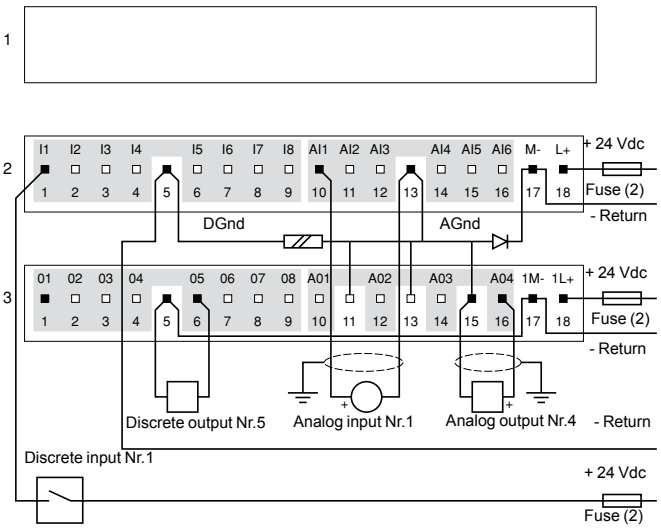

Group of channels

Internal wiring

(1) ⎓ 24 V for 170 AMM 090 00, ⎓ 12 V for 170 AMM 090 01.
(2) Depending on application, max 5 A.

Modicon™ Momentum™ automation platform

Specialty module I/O bases

Product type		High-speed counter

Operating voltage		24 Vdc
Unique features		2 independent, high-speed (10 kHz-200 kHz) counters
Modularity	Input channels	6 (3 per counter) True High Inputs
	Output channels	4 (2 per counter) True High Outputs
Input specifications	Counter inputs	5 Vdc differential input, 200 kHz counter; 24 Vdc single-end input, 10 kHz counter
	Discrete inputs	6 (2 x 3) 24 Vdc inputs: - voltage range, - 3 to + 30 Vdc - response time, 3 ms Off to On or On to Off
Output specifications	Counter outputs	Two 5 Vdc differential outputs min 20 mA @ 24 Vdc
	Discrete outputs	4 (2 per counter) 24 Vdc outputs: - on current, 0.5 A per point, 1 A per counter - response time: < 0.1 ms Off to On, < 0.1 ms On to Off
Protection		
Surge	Input voltage	45 V peak for 10 ms
	Output current	5 A for 1 ms
Type of module		**170 AEC 920 00**
Pages		42

I/O with Modbus Master Base

120 Vac

RS 485 2- or 4-wire Modbus port

6 True High Inputs

3 True High Outputs

–

1 group of 6 inputs (120 Vac @47 to 63 Hz):
- voltage range, 0 to 132 Vac
- response time, < 12.3 ms @ 60 Hz On to Off,
< 12.5 ms @ 60 Hz Off to On

3 solid state switching outputs (120 Vac @47 to 63 Hz):
- on current, 0.5 A continuous per point, 1.5 A continuous per module
- response time: < 12.3 ms @ 60 Hz On to Off, < 12.5 ms @ 60 Hz Off to On

170 ADM 540 80

42

Modicon™ Momentum™ automation platform

Specialty module I/O bases

Introduction

Modicon™ Momentum™ specialty module I/O bases provide support for unique applications that broaden the range of the Modicon Momentum offering. The specialty modules are: a 2-channel, High-speed counter module base - 170 AEC 920 00, and a 120 Vac, 6-point input/3-point output module base with a Modbus communication port - 170 ADM 540 80.

High-speed counter

The 170 AEC 920 00 high-speed counter module base features 2 independent counters, along with 6 discrete inputs and 4 discrete outputs.This base can connect directly to either 5 Vdc differential or 24 Vdc single-ended encoders. The base supports two operating modes:

- Incremental (up counter, down counter, and quadrature)
- Absolute (SSI up/down counter)

The high-speed counter module can be connected directly to many standard communication networks – for communicating with programmable controllers, industrial computers, and other controllers – by installing one of the snap-on Modicon Momentum communication adapters onto the base.

Input/Output module with Modbus™ communication port

The **170 ADM 540 80** input/output module base has 6 discrete inputs and 3 discrete outputs for direct connection to 2- and 3-wire sensors and actuators, plus a Modbus communication port for connection to serial devices.

This module can also be used as the I/O base for a programmable controller, in either a stand alone or distributed I/O configuration, by installing one of the snap-on Modicon Momentum M1 processor adapters.

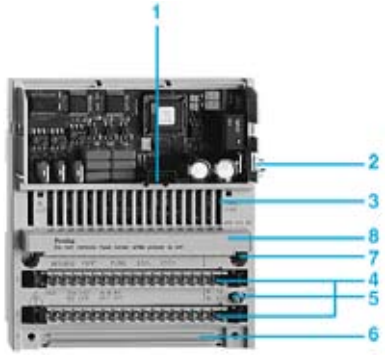

Description

A specialty module I/O base consists of the following components:

1. Internal interface connectorfor the communication module
2. Locking and ground contact for the adapter
3. LED status display
4. Two connectors for the removable terminal blocks
5. Grounding screw
6. Grounding busbar mounting slot
7. Mounting holes for a panel mount
8. Protective cover for fuses (**170 ADM 540 80**) or connector for the removable terminal block

Specifications: page 41
References: page 42
Wiring diagrams: page 43

Specifications

Model No.				170 AEC 920 00	170 ADM 540 80
Number of I/O	Counter			2 independant	–
	Inputs			2 x 3 discrete	1 x 6 discrete
	Outputs			2 x 2 discrete	1 x 3 discrete
Discrete inputs	Operating voltage		**V**	24 DC	120 AC @ 47... 63 Hz
	Input	Range	**V**	- 3...+ 30 DC	0...132 AC
		Surge	**V**	45 peak for 10 ms	200 AC for 1 cycle
	Input current	On	**mA**	2.5 minimum	5.5 minimum
		Off	**mA**	1.2 maximum	1.9 maximum
	Switching level		**V**	11 DC minimum on voltage 5 DC maximum off voltage	79 AC minimum on voltage 20 AC maximum off voltage
	Response time	Off to on	**ms**	3	< 12.5 @ 60 Hz
		On to off	**ms**	3	< 12.3 @ 60 Hz
	Signal type			True High	
Discrete outputs	Operating voltage		**V**	24 DC	120 AC @ 47 to 63 Hz
	Signal type			True High	
	On state voltage drop		**V**	< 0.5 DC @ 0.5 A current	< 1.5 AC @ 0.5 A current
	Fault sensing			Overload and short circuit	1 fuse, 2.5 A @ 250 Vac
	Current capacity		**A**	0.5 per point	0.5 continuous per point
			A	1 per counter	–
			A	2 per module	1.5 continuous per module
	Current	Leakage	**mA**	< 1 @ 24 Vdc	1.9 @ 120 Vac
		Surge	**mA**	5 A for 1 ms	30 minimum
	Response time	Off to on	**ms**	< 0.1	< 12.5 @ 60 Hz
		On to off	**ms**	< 0.1	< 12.3 @ 60 Hz
Counter inputs	Incremental counters			Up counter, down counter, quadrature	–
	Absolute SSI counter			Up/down counter with 4 sub-modes	–
	Input signals		**Vdc**	5 differential input 24 single-ended input	– –
	Counter speed (max)		**kHz**	200, differential inputs 10, single-ended inputs	– –
	Counter capacity			24 bits plus sign per counter	–
	Counter configuration			Via comm adapter (8 input words, 8 output words)	–
Modbus port	Type			–	RS-485, 2- or 4-wire
	Communication rates		**bit/s**	–	19200 and 9600
	Format			–	8-bit RTU / 7-bit ASCII
	Modbus address range			–	0...247
	Timeout		**ms**	–	150 after transmission
Current consumption			**mA**	280	125 @ 120 Vac
Agency approvals				UL, CE, CSA	

References:
page 42

Wiring diagrams:
page 43

Modicon™ Momentum™ automation platform

Specialty module I/O bases

References

170 AEC 920 00

170 ADM 540 80

Modules

Description	Specifications	Reference	Weight kg
High-speed counter Module Base	2 independent counters	**170 AEC 920 00**	0.210
I/O module base with Modbus™ comm port	RS 485 Modbus port 6 inputs, 3 outputs	**170 ADM 540 80**	0.240

Replacement parts

Description	Use	Reference	Weight kg
Sheets of labels	10 front labels for Modicon Momentum™ modules	**170 XTS 100 00**	–

Documentation

Description	Use	Reference	Weight kg
Modicon Momentum I/O bases	User guide for: 170 AEC 920 00	**870 USE 008 00**	–
	170 ADM 540 80	**870 USE 002 00**	–

***Accessories**: Terminal blocks, bus bar, cable grounding rail and discrete input simulator, see page 19.*

Specifications:
page 41

Wiring diagrams:
page 43

Wiring diagrams

170 AEC 920 00

2-encoder and input/output field wiring example

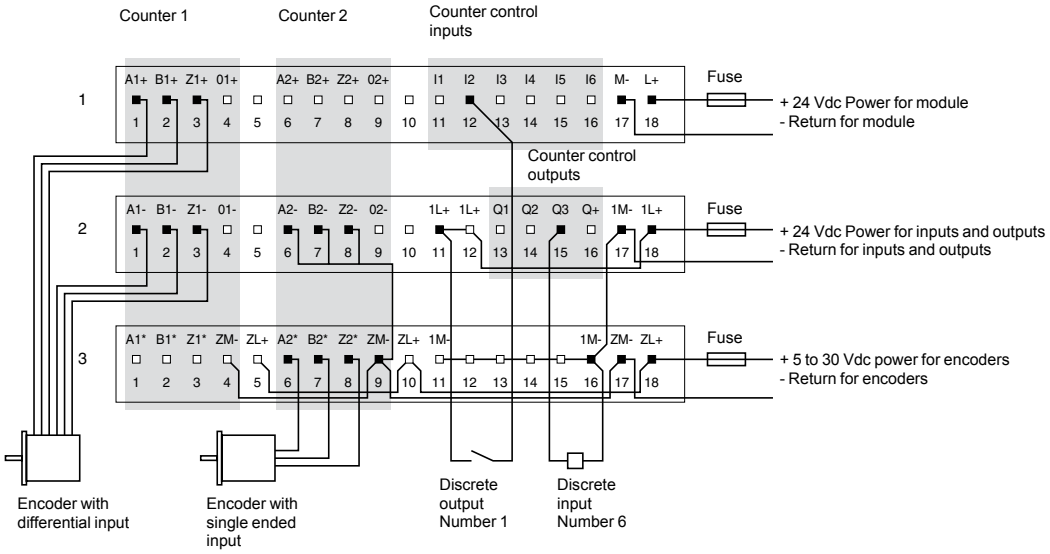

170 ADM 540 80

Modbus device and input/output field wiring example

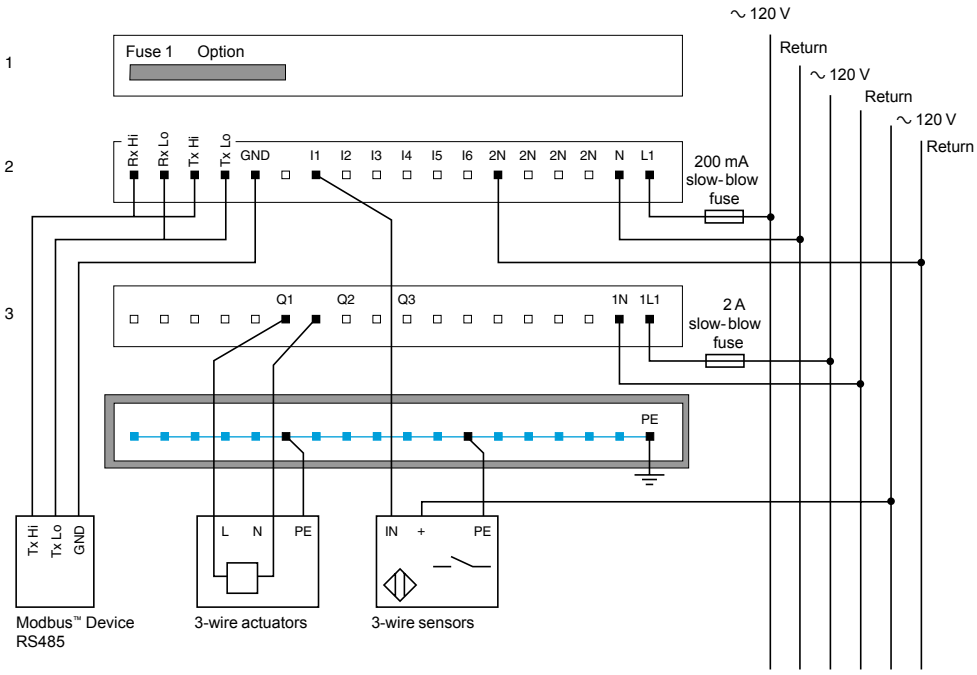

Specifications: page 41
References: page 42

Modicon™ Momentum™ automation platform

Communication adapters

Applications		Communication adapters for Ethernet TCP/IP	
Bus and network type		Ethernet TCP/IP	
		Transparent Ready Class A10	B20
Topology	Physical interface	IEEE 802.3 standard	
	Method of access	CSMA-CD	
	Bit rate	10 Mbit/s	10/100 Mbit/s
Medium	Type	Twisted pair CAT5	
	Topology	Star	
	Redundancy	No	
Maximum number of devices		64	
Maximum length		1000 m per segment	
Type of communicating module		170 ENT 110 02	170 ENT 110 01
Pages		49	

Communication adapters for InterBus™		Communication adapter for Profibus DP™ bus
InterBus	InterBus I/O bus	Profibus DP
SUPI 3	SUPI 2	
DIN 19 258 standard		EN 50170 standard
Master/Slave		Master/Slave
500 Kbit/s		12 Mbit/s…9.6 Kbit/s depending on length
Twisted pair		Twisted pair
Ring		Multi-drop, ring
No		No
40 per installation remote bus module (up to 254 bus terminal modules)		32 without repeater 126 with repeaters
12800 m		1200 m
170 INT 110 03	**170 INT 110 00**	**170 DNT 110 00**
49		59

Modicon™ Momentum™ automation platform

Communication adapters

Applications		Communication adapters for Modbus Plus™ network		
		IEC Data Format		984 Data Format
Bus and network type		Modbus Plus		
Topology	Physical interface	Modbus Plus		
	Method of access	Token bus		
	Bit rate	1 Mbit/s		
Medium	Type	Twisted pair		
	Topology	Multi-drop		
	Redundancy	No	Yes	No
Maximum number of devices	Per segment	32		
	Overwall	64 (without repeaters)		
Maximum length		5 000 m with repeaters		
Type of communicating module		**170 PNT 110 20**	**170 PNT 160 20**	**170 NEF 110 21**
Pages		53		

Communication adapters for Modbus Plus™ network 984 Data Format	Communication adapters for FIPIO™ bus for TSX Series 7 and April 5000	for Modicon™ Premium™ PLCs
	FIPIO	
Modbus Plus	Fip standard	
Token bus	Bus managed by bus arbitrator	
1 Mbit/s	1 Mbit/s	
Twisted pair		
Multi-drop		
Yes	No	
32		
64 (without repeaters)		128
5 000 m with repeater		15 000 m with repeaters
170 NEF 160 21	**170 FNT 110 00**	**170 FNT 110 01**
53	55	

Modicon™ Momentum™ automation platform

Ethernet TCP/IP communication adapters

Introduction

The Model 170 ENT 110 02 and 170 ENT 110 01 Ethernet communication adapters for the Modicon™ Momentum™ I/O product line provide a direct connection to Ethernet-based networks for the entire family of Modicon Momentum I/O modules. This connectivity enables communications with a full range of Ethernet TCP/IP compatible control products that includes: programmable controllers, industrial computers, motion controllers, operator control stations, host computers, and other controls. This communication network provides a flexible, cost-effective solution for communicating factory floor information to various layers of an integrated manufacturing facility.

The 100BASE-TX Ethernet communication adapter, the **170 ENT 110 01** (and the 10BASE-T adapter, the **170 ENT 110 02**) are single adapters designed to plug on to any of the Modicon Momentum Input/Output module bases. Both are designed to conform to the requirements of the Ethernet communication network.

The Ethernet IP addressing scheme allows an unlimited number of Modicon Momentum I/O modules or wiring diagrams on the network. Using standard Ethernet hubs, routers, and bridges, the performance and distance capability of the Ethernet network can be tailored to meet the requirements of almost any control application.

The Ethernet communication adapter uses the standard Modbus™ message structure and control commands over the TCP/IP protocol. This simplifies implementation by control engineering, while providing information that can be communicated over standard network media to enterprise applications.

Since Modbus on TCP/IP over Ethernet is supported by Schneider Electric's Modicon™ Quantum™ and Premium™ controller families, Modicon Momentum I/O can be added to existing control systems where additional I/O capacity of a distributed I/O sub-network is needed.

The Ethernet communication adapter requires connection to a BOOTP server for configuring the module's IP parameters, including its own unique IP address, default gateway, and sub-net mask. These parameters are stored in the communication adapter's flash memory. Schneider Electric automation business offers BOOTP Lite Ethernet software as a free download from the Schneider Electric web site at **www.schneider-electric.us**.

Description

The front panel of the 170 ENT 110 0● Ethernet communication adapter features:

1 Ethernet RJ45 connector for 100BASE-TX interface for **170 ENT 110 01**) or 10BASE-T interface for **170 ENT 110 02**)
2 Area for Label (label shipped with I/O base)
3 LED Status Indicators for the **170 ENT 110 02** display include:
- Run (green), module health
- LAN Active (green), Ethernet network status

LED Status Indicators for the **170 ENT 110 01** display include:
- Run (green), module health
- 10T (green), 10 Mbit/s network activity
- 100T (amber), 100 Mbit/s network activity
- ST (green), Ethernet network status

Modicon™ Momentum™ automation platform

Ethernet TCP/IP communication adapters

Specifications

Model No			170 ENT 110 02	170 ENT 110 01
Communication network			Ethernet TCP/IP	
Media			Shielded twisted pair cable	
Communication rate		**Mbit/s**	10	10/100
Distance		**m (ft)**	100 (328) per segment	
Connectors			RJ45, 10BASE-T	RJ45, 100BASE-TX
Transparent Ready™ services	Class		A10	B20
	Standard Web server		–	"Rack Viewer" access to the product description and status and to base unit diagnostics "Data editor" access to the configuration functions and variables
	Standard Ethernet TCP/IP communication services		Modbus™ Messaging (read/write data words)	
			–	FDR client for automatic assignment of the IP address and network parameters SNMP agent, detection of the product by an SNMP manager
adapter configuration			BOOTP server to assign IP parameters	
Flash memory			128 K for IP parameter storage	
Error checking			CRC-32 error check	
Error and fail states			Fail safe	
Addressing			Unique IEEE global address, IP address user assigned	
Mode of operation			Master slave, peer-to-peer	
Topology			Multi-drop bus, star	
Packaging			Standard Modicon™ Momentum™ communications adapter enclosure - IP 20 environment	
Indicator lights			Run and activity lights	Run, 10 Mbit/s, 100 Mbit/s, and status lights
Power source			Power supply on-board the I/O base	
Hot swapping of modules			Yes	
Agency approvals			UL, CE, CSA, FM Class I, Div. II	UL, CE, CSA

References

170 ENT 110 02

Communication adapters

Description	Communication rate Transparent Ready Class *(1)*	Reference	Weight kg
Ethernet TCP/IP communication adapters	10 Mbit/s A10	**170 ENT 110 02**	0.070
	10/100 Mbit/s B20	**170 ENT 110 01**	0.070

Accessories

ConneXium™ cabling system	See page 76	–
BOOTP Lite Ethernet Software	Download from www.schneider-electric.us	
Ethernet TCP/IP communication adapter user guide	See page 103	–

(1) Transparent Ready Class A10 and B20, for more details, consult our catalog "Transparent Ready, Ethernet TCP/IP and Web technologies"

Modicon™ Momentum™ automation platform

Modbus Plus™ communication adapters

Introduction

Modbus Plus™ communication adapters for the Modicon™ Momentum™ I/O product line can be plugged into any Modicon Momentum I/O base to create a functional I/O unit on the Modbus Plus bus…and to provide a direct connection to the Modbus Plus Network for the full family of Modicon Momentum I/O modules. This connectivity enables communications with Modbus Plus compatible control products – including: programmable controllers, industrial computers, operator control stations, drive systems, and other controls – and provides a flexible, cost-effective solution for distributing I/O modules throughout a large area. To expand the capabilities of the Modbus Plus Network for distributed I/O applications, the communication adapters have been designed to permit up to 64 Modicon Momentum I/O modules to be connected to the network without the need for signal repeaters.

Each Modicon Momentum I/O module is an individual node on the Modbus Plus network with its address user-selected on the dual rotary switch on the front of the communication adapter. The Modicon Momentum I/O modules can be configured for the network, and assigned program reference numbers, by using either the Peer Cop function, the MSTR function block instruction in the programmable controller, or the Modbus Plus configuration in an industrial computer.

There are four types of communication adapters available:
170 PNT 110 20, Single Port, IEC Data Format
170 PNT 160 20, Redundant Port, IEC Data Format
170 NEF 110 21, Single Port, 984 Data Format
170 NEF 160 21, Redundant Port, 984 Data Format

IEC Data Format

This version of the Modicon Momentum Modbus Plus communication adapter communicates I/O data to the programmable controller in the IEC data format, which has bit numbering 0 through 15, right to left, within the data word (i.e., input or output number 1 is bit number 0).

984 Data Format

This version of the Modicon Momentum Modbus Plus communication adapter communicates I/O data to the programmable controller in the traditional 984 data format, which has bit numbering 1 through 16, left to right, within the register (i.e., input or output number 1 is bit number 1).

Since Modbus Plus is supported by the Modicon™ Quantum™ and 984™ controller families, Modicon Momentum I/O can be added to existing control systems where additional I/O capacity or a distributed I/O sub-network is needed.

Modicon™ Momentum™ automation platform

Modbus Plus™ communication adapters

Description

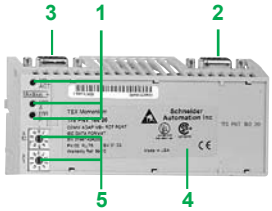

Each 170 PNT/NEF communication module is comprised of:

1 Three indicator lights (LEDs):
- MB + ACT indicator light (green) : module powered up or communicating
- ERR A indicator light (red) : detected communication error network A
- ERR B indicator light (red) : detected communication error network B (for redundant model)

2 A 9-way male SUB-D connector for connecting to the Modbus Plus™ network

3 A 9-way male SUB-D connector for a redundant Modbus Plus network

4 A slot for an identification label (supplied with I/O sub-bases)

5 Two switches for coding the slave address on the bus

Specifications

Type of module		170 PNT 110 20	170 PNT 160 20	170 NEF 110 21	170 NEF 160 21
Communication network		Modbus Plus			
Master PLC on the network		Modicon™ Quantum™, Modicon™ Premium™	Modicon Quantum	Modicon Quantum, Compact™ 984	
Structure	Type	Industrial			
	Redundancy	No	Yes	No	Yes
	Topology	Multi-drop, devices connected using extension cable or tap-off cable			
	Length	5,000 m (6000 ft) maximum with repeaters			
	Access method	Token bus			
Transmission	Bit rate	1 Mbit/s			
	Medium	Twisted pairs			
Data Format		IEC Data Format		984 Data Format	
Number of Modicon Momentum devices	Per segment	31 connection points			
	Maximum	63 connection points			
Power source		Power supply on-board the I/O base			
Behavior in the event of a detected communication error		Discrete I/O : forcing to state 0 Analog I/O : configurable (maintain value, fallback to 0 or full scale value)			
Services		Configuration : Peer cop and MSTR function block, “peer-to-peer” mode			
Agency approvals		UL, CE, CSA, FM Class I, Div. II		UL, CE, CSA	

References :
page 53

Modicon™ Momentum™ automation platform

Modbus Plus™ communication adapters

Network topology

Modicon™ Momentum™ I/O modules in a distributed control system

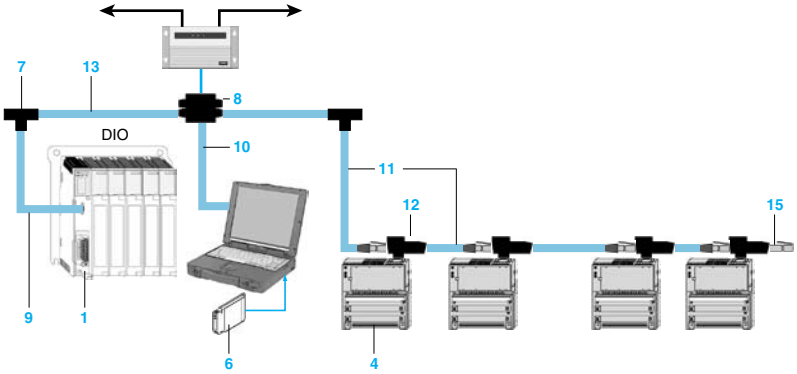

Modicon Momentum I/O modules with Modbus Plus™ double cable in a distributed and redundant control system

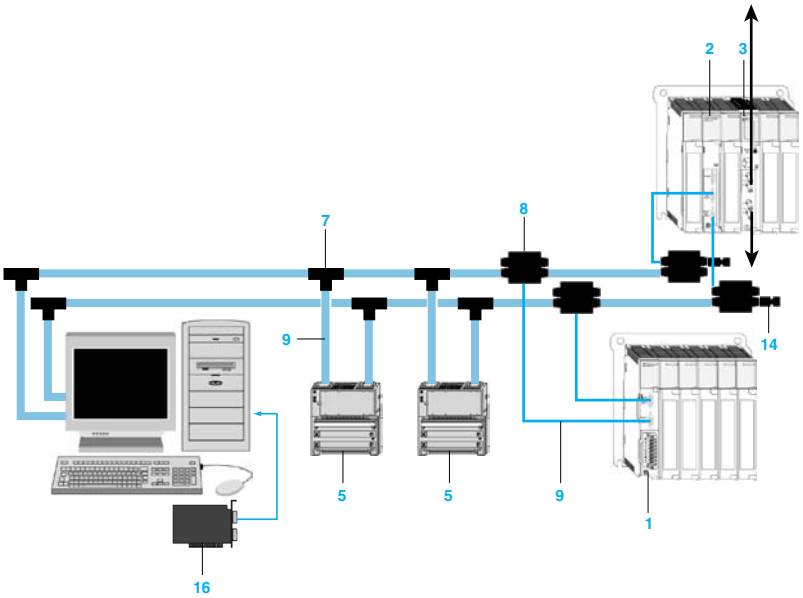

1 **140 CRA 211 10**: Modicon™ Quantum™ Modbus Plus™ drop interface and power supply, single-cable support, 115/230 Vac
2 **140 NOM 212 00**: Modicon Quantum Modbus Plus head-end interface, redundant support, twisted pair cable
3 **140 NOM 252 00**: Modicon Quantum Modbus Plus Head-end Interface, single-cable support, fiber optic cable
4 **170 PNT 110 20** or **170 NEF 110 21**: Modicon Momentum Modbus Plus communication adapter, non-redundant network
5 **170 PNT 160 20** or **170 NEF 160 21**: Modicon Momentum Modbus Plus communication adapter, redundant network
6 **416 NHM 212 33**: Modbus Plus type III PCMCIA Card, single port ; or
416 NHM 212 34: Modbus Plus type III PCMCIA Card, single port, “plug and play”
7 **990 NAD 230 00**: Modbus Plus tap, IP 20
8 **990 NAD 230 10**: Modbus Plus tap, IP 65
9 **990 NAD 211 10/30**: Modbus Plus drop cable (lengths: 2 or 4 or 6 m)
10 **990 NAD 215 10**: Modbus Plus ruggedized tap programming Cable, 3.05 m
11 **170 MCI 020/021●●**: Modbus Plus RJ45 cable (lengths: 0.25 , 1 , 3 or 10 m)
12 **170 XTS 020 00**: Modbus Plus “T” connector (DB9 base)
13 **490 NAA 271 0●**: Standard Modbus cable (lengths: 30, 150, 300, 450 or 1500 m)
14 **990 NAD 230 11**: Modbus Plus ruggedized tap terminators
15 **170 XTS 021 00**: Modbus Plus RJ45 terminator
16 **416 NHM 300 32**: Modbus Plus PCI PC adapter Card, dual ports

Specifications :
page 51

References :
page 53

Modicon™ Momentum™ automation platform

Modbus Plus™ communication adapters

170 PNT 110 20/NEF 110 21

170 PNT 160 20/NEF 160 21

References

Description	Connection	Item (1)	Bus master PLC	Reference	Weight kg
Communication adapters for Modicon™ Momentum™ I/O sub-bases	Non-redundant Modbus Plus™ network	4	Modicon Premium, Modicon Quantum	**170 PNT 110 20**	–
			Compact 984	**170 NEF 110 21**	–
	Redundant Modbus Plus network	5	Modicon Quantum	**170 PNT 160 20**	–
			Compact 984	**170 NEF 160 21**	–

Description	Use	Mounting on	Item (1)	Reference	Weight kg
Modbus Plus taps	IP 20 junction box for tap-off connection "T"	–	7	**990 NAD 230 00**	0.230
	IP 20 junction box for tap-off connection "T", connection of cable on screw terminal block with one RJ45 connector in front	DIN profile	–	**990 NAD 230 20**	–
		Panel	–	**990 NAD 230 21**	–
	Modbus Plus Tap (IP 20), standard Modbus cable with one RJ45 connector in front	Panel	8	**990 NAD 230 10**	0.650
	IP 20 "T" with 2 RJ45 connectors for Modbus cable and one 9-way SUB-D connector for tap link devices	–	12	**170 XTS 020 00**	0.260
Terminator connector kit (set of 2)	2 impedance adaptors for box (IP 20) 990 NAD 230 20/21	–	1	**990 NAD 230 22**	–
	2 impedance adaptors for box (IP 20) 990 NAD 230 10	–	14	**990 NAD 230 11**	–
	2 impedance adaptors for tee (IP 20) 170 XTS 020 00	–	15	**170 XTS 021 00**	–

Connection cables

Description	Use: From	Use: To	Item (1)	Length	Reference	Weight kg
Standard Modbus Plus cables	T-junction box 990 NAD 230 00, 990 NAD 230 11	T-junction box 990 NAD 230 00, 990 NAD 230 11	13	30 m	**490 NAA 271 01**	–
				150 m	**490 NAA 271 02**	–
				300 m	**490 NAA 271 03**	–
				450 m	**490 NAA 271 04**	–
				1500 m	**490 NAA 271 06**	–
Modbus Plus cable for RJ45	"T" 170 XTS 020 00	"T" 170 XTS 020 00	11	0.25 m	**170 MCI 021 10**	–
				1 m	**170 MCI 021 36**	–
				3 m	**170 MCI 021 20**	–
				10 m	**170 MCI 021 80**	–
Modbus Plus Drop cables	Communication modules for Modicon™ Momentum I/O sub-bases 170 PNT/NEF	T- junction box 990 NAD 230 00/10	9	2.4 m	**990 NAD 211 10**	–
				6 m	**990 NAD 211 30**	–

Description	Use: From junction box	Use: To equipment, cable outlet of 9-way SUB-D type connectors	Length	Reference	Weight kg
Modbus Plus Drop Cable	Flying leads	Left side	2.4 m	**990 NAD 218 10**	–
			6 m	**990 NAD 218 30**	–
		Right side	2.4 m	**990 NAD 219 10**	–
			6 m	**990 NAD 219 30**	–

AS MBKT 085

Connecting accessories

Description	Use for	Reference	Weight kg
RJ45 Crimp tool	Crimping the RJ connectors	**490 NAB 000 10**	–
9-way female SUB-D connector	Communication module connection	**AS MBKT 085**	–
Wiring tool	Fitting trunk cables and drop cables in local site tap	**043 509 383**	–
Other connection accessories		See page 75	

(1) Item, see page 52.

Specifications : page 51

Modicon™ Momentum™ automation platform

FIPIO™ communication adapters

Introduction

The FIPIO™ communication adapter can be plugged into a Modicon™ Momentum™ I/O base to create a functional I/O unit on the FIPIO bus, and to provide a direct connection to the FIPIO Network for the full family of Modicon Momentum I/O modules. This connectivity enables the Modicon Momentum I/O to be used along with other FIPIO compatible control devices, including: industrial computers, operator control stations, drive systems, and other controls – to provide a flexible, time-critical, cost-effective solution for distributing I/O modules throughout a large area.

There are two types of communication adapters available:
170 FNT 110 01 *(1)* for a FIPIO bus connected to a Modicon™ Premium™ PLC
170 FNT 110 00 for a FIPIO bus connected to TSX 7 series CPUs or APRIL 5030 and 5130 CPUs

Each Modicon Momentum I/O module is an individual node or device on the FIPIO network with its address set by the user on the dual rotary switch on the front of the communication adapter. FIPIO is a network that can have up to 128 slave devices. The FIPIO network's distance and communication capabilities range from 1000 meters (3330 ft.) to 15000 meters (45000 ft) with repeaters over twisted pair cable at a data rate of 1 Mbit/s.

(1) The FIPIO communication adapter **170 FNT 110 01** *does not support the* **170 ADM 540 80** *I/O base.*

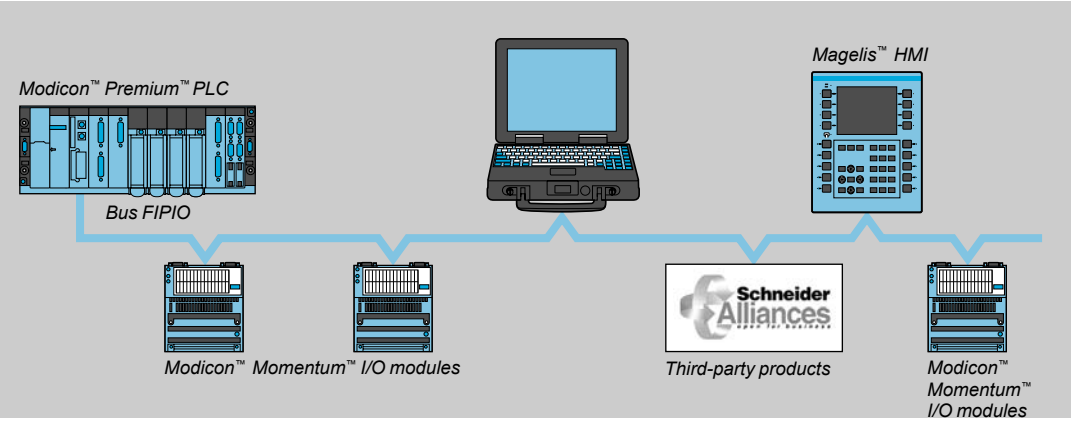

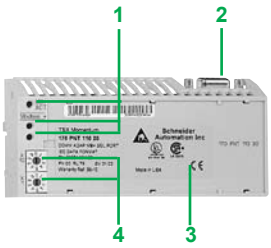

Description

The 170 FNT 110 0p communication module features the following:

1 Three indicator lights (LEDs):
- Ready indicator light (green): module powered up or in service
- COM indicator light (yellow): data being sent or received
- ERR indicator light (red): inoperative device

2 9-way male SUB-D connector for connecting to FIPIO bus
3 Slot for identification label (supplied with I/O sub-bases)
4 Two switches for coding slave address on the bus

Modicon™ Momentum™ automation platform

FIPIO™ communication adapters

Specifications

Type of module		170 FNT 110 01	170 FNT 110 00
Communication bus		FIPIO™	
Bus manager PLC		Premium	TSX Series 7, model 40 or April 5000
Structure	Type	Open industrial, conforming to the WorldFip standard	
	Topology	Devices connected using extension cable or tap-off cable	
	Length meters	1,000 to 5,000 depending on the medium used	
	Access method	Producer/consumer principle, managed by a bus arbiter	
Transmission	Bit rate	1 Mbit/s	
	Media	Shielded twisted pair cable 150 Ω. Fiber optic 62.5/125 or 50/125 with electrical/optical repeaters	
Number of Modicon™ Momentum™ devices	Per segment	31 connection points (without repeater)	
	Maximum	97 connection points	61 connection points
Behavior in the event of a detected communication error		Discrete I/O: forcing to state 0	
		Analog I/O: configurable (maintain value, fallback to 0 or full scale value)	
		Other specifications, consult our catalog Premium automation platform	
Agency approvals		UL, CE, CSA	

References

170 FNT 110 01/00

Description	Connection	Bus manager PLC	Reference	Weight kg
Communication adapters for Modicon Momentum I/O sub-bases	FIPIO fieldbus on Modicon Momentum I/O sub-bases	Modicon Premium	**170 FNT 110 01** *(1)*	0.110
		TSX Series 7, Model 40, April 5000	**170 FNT 110 00**	0.110

TSX FP ACC 12

TSX FP ACC 14

Description	Connection	Material	Reference	Weight kg
Female connectors (9-way SUB-D)	On 170 FNT 110 0● communication module	Black polycarbonate IP 20	**TSX FP ACC 12**	0.040
		Zamac	**TSX FP ACC 2**	0.080
Bus connection boxes	Main tap-off cable	Black polycarbonate IP 20	**TSX FP ACC 14**	0.120
		Zamac IP 65	**TSX FP ACC 4**	0.660

TSX FP ACC 4

Description	Composition	Length	Reference	Weight kg
Tap-link cables	8 mm, 2 shielded twisted pair 150 Ω	100 m	**TSX FP CC 100**	5.680
		200 m	**TSX FP CC 200**	10.920
		500 m	**TSX FP CC 500**	30.000
Other connection accessories	–	–	Consult our catalog "Premium automation platform"	–
FIPIO Communication adapter User Guide	–	–	See page 102	–

(1) Does not support the **170 ADM 540 80** *I/O base.*

Modicon™ Momentum™ automation platform

InterBus™ communication adapters

Introduction

The InterBus™ communication adapter for the Modicon™ Momentum™ I/O product line provides a direct connection to the InterBus Network for the full family of Modicon Momentum I/O modules. This connectivity enables Modicon Momentum I/O to be used in open architecture control systems that utilize either a programmable controller or industrial computer as the network master. In these applications, InterBus serves as the communication network that connects Modicon Momentum I/O modules, along with other InterBus compatible control devices, for the communication of input and output information with a single master controller.

There are two types of InterBus adapters available:
170 INT 110 00, twisted pair media, SUPI 2
170 INT 110 03, twisted pair media, SUPI 3, supports G4 diagnostic

The InterBus communication adapter is designed to plug on to any of the Modicon Momentum Input/Output module bases, thus allowing the I/O module to be accessed over the InterBus Communication Network. Each Modicon Momentum I/O module is an individual node or device on the InterBus network with its address set either by its physical location on the network, or by menu-driven software that is available with some InterBus master devices. InterBus is a cost-effective method of distributing I/O modules throughout large plant areas. The figure below illustrates a typical control system using Modicon Momentum I/O modules on the InterBus network, with a Quantum PLC programmable controller as the network master.

Network Topology

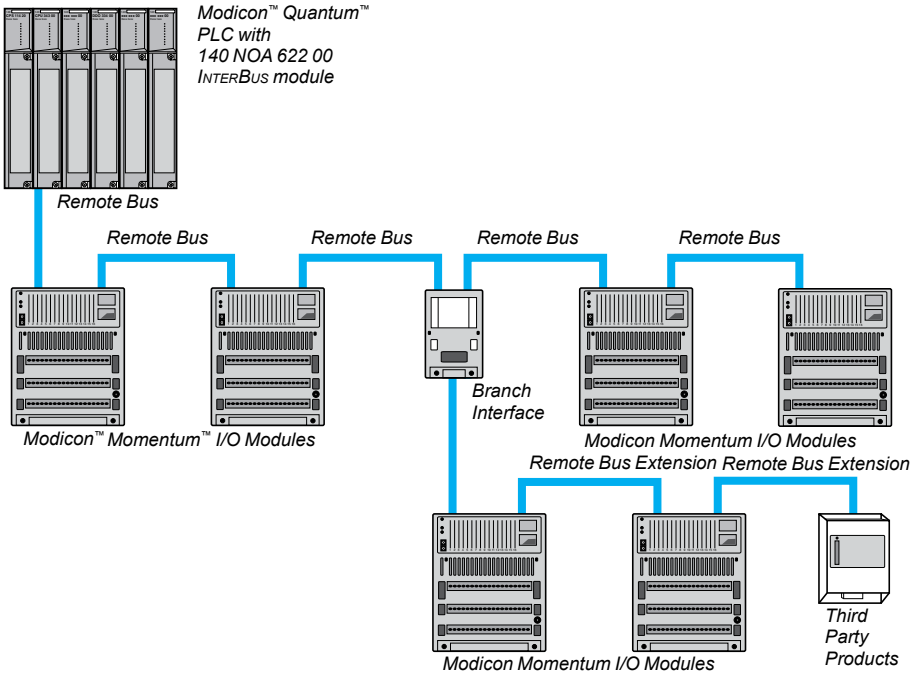

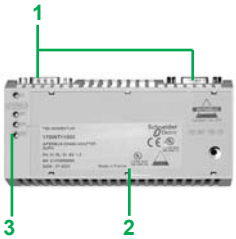

Description

The **170 INT 110 0●** InterBus communication adapters feature the following on the front panel:

1 Two 9-Pin SUB-D connectors for connection to the InterBus bus
2 Area for Label (label shipped with I/O base)
3 LED Status Indicators for **170 INT 110 0●** include:
- UL (green), logic power check (**170 INT 110 03** only)
- BA (green), bus enabled
- RC (green), remote bus check
- RD (yellow), remote bus disabled

Modicon™ Momentum™ automation platform

InterBus™ communication adapters

Specifications

Model No.		170 INT 110 00	170 INT 110 03
Communication network		InterBus™, I/O bus	InterBus
Communication rate	**Kbit/s**	500	
Number of nodes (devices)		Up to 254 devices	
Media		Twisted Pair	
Distance	**m (ft)**	Up to 12 800 (41 984 ft), 400 (1312 ft) between two nodes	
Connectors		2-9 Pin “D” connectors	
Error checking		CRC-16 error check	
Error and fail states		Fail safe	
Addressing		Physical location or software	
Mode of operation		Master-Slave, continuous shift register	
Topology		Ring	
InterBus generation		SUPI 2	SUPI 3
Packaging		Standard Modicon™ Momentum™ communication adapter enclosure - IP 20 environment	
Indicator lights		Diagnostic and status light standard	
Power source		Power supply on board the I/O base	
Agency approvals		UL, CE, CSA, FM Class I, Div. II	

References

170 INT 110 00/110 03

Modules

Description	Media	Generation	Reference	Weight kg
InterBus communication adapters	Twisted Pair	SUPI 2	**170 INT 110 00**	0.070
		SUPI 3	**170 INT 110 03**	0.070

Accessories

Description	Length	Reference	Weight kg
Branch Interface, Twisted Pair, SUPI 3	–	**170 BNO 671 01**	–
InterBus Connector Kit, sockets/pins, 9-pin with male and female connectors for remote bus cable	–	**170 XTS 009 00**	–
InterBus Cable (with small connectors)	11 cm (0.36 ft)	**170 MCI 007 00**	–
InterBus Cable low-profile connector	100 cm (3.3 ft)	**170 MCI 100 01**	–
InterBus cables	100 m (330 ft)	**TSX IBS CA 100**	–
	400 m (1312 ft)	**TSX IBS CA 400**	–
	By the meter	**KAB 3225 LI**	–
Modicon Momentum front label replacement (set of 10)	–	**170 XCP 100 00**	–
InterBus User Guide	–	See page 103	

Modicon™ Momentum™ automation platform

Profibus DP™ communication adapters

Introduction

The Model 170 DNT 110 00 Profibus DP™ communication adapter for the Modicon™ Momentum™ I/O product line provides a direct connection to the Profibus DP Communication Network for the full family of Modicon Momentum I/O modules. This connectivity enables the Modicon Momentum I/O to be used in open architecture control systems with other Profibus DP compatible control products, including: programmable controllers, industrial computers, operator control stations, drive systems, and other controls – to provide a flexible, cost-effective solution for distributing I/O modules throughout a large area.

The Profibus DP communication adapter is a single package that is designed to plug on to any of the Modicon Momentum Input/Output modules base, thus allowing the I/O module full access to the Profibus DP Communication Network. Each Modicon Momentum I/O module is an individual node on the network, with its address user-selected on the dual rotary switch on the front of the communication adapter. The figure below illustrates a typical control system using Modicon Momentum I/O modules on the Profibus DP network with programmable controllers and industrial computer systems.

The Profibus Configuration File is required for the configuration of the Modicon Momentum I/O Modules on the Profibus DP network. This file contain the Profibus PNO "Identnumber" for Modicon Momentum I/O modules, and is available at no charge to users as a download over the Internet from the Schneider Electric web page.

Network Topology

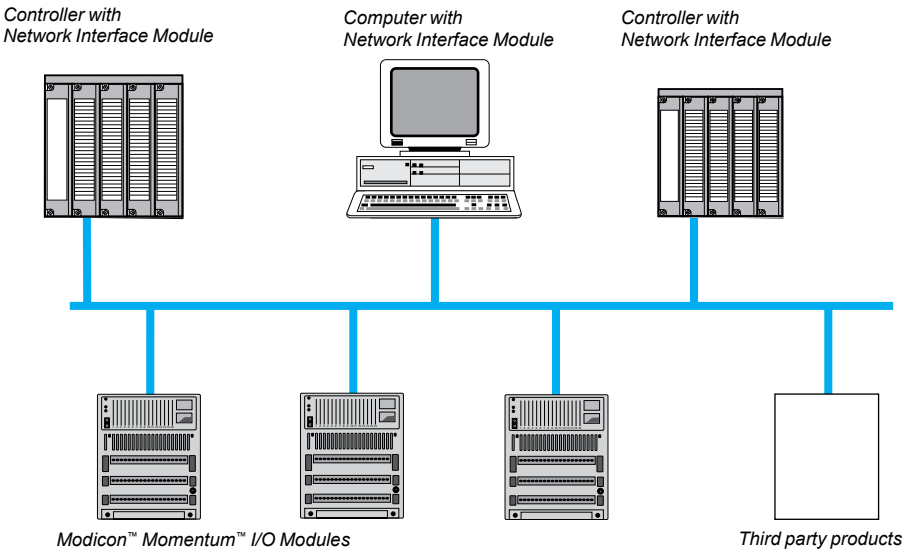

Description

The front panel of the **170 DNT 110 00** Profibus DP Communication adapter is comprised of:

1 LED Status Indicators comprising: BF (green), detected bus fault
2 A 9-Pin SUB-D connector for connection to the Profibus DP Network
3 Area for Label (label shipped with I/O base)
4 Rotary switches for slave addresses

Modicon™ Momentum™ automation platform

Profibus DP™ communication adapters

Specifications

Model No.		170 DNT 110 00
Communication bus		Profibus DP™
Communication rate		9.6 Kbit/s…12 Mbit/s
Number of nodes (devices)		Up to 126 devices (32 without repeater)
Media		Twisted Pair
Distance	**m (ft)**	Up to 1 200 (4 000)
Connectors		9 Pin “D” connectors
Error checking		CRC-16 error check
Error and fail states		Fail safe
Addressing		Switch selectable
Mode of operation		Master-Slave
Topology		Multi-Drop, Ring
Packaging		Standard Modicon™ Momentum™ commmunications adapter enclosure - IP20 environment
Indicator lights		Diagnostic and status light standard
Power source		Power supply on-board the I/O base
Agency approvals		UL, CE, CSA

References

170 DNT 110 00

Module

Description	Reference	Weight kg
Profibus DP Communication adapter	**170 DNT 110 00**	0.070

Accessories

Description	Length	Reference	Weight kg
Device Master File	–	*(1)*	–
Profibus DP cable	100 m (328 ft)	**TSX PBS CA 100**	–
	400 m (1312 ft)	**TSX PBS CA 400**	–
	By the meter	**KAB PROFIB**	–
Profibus DP connector with Terminator	–	**490 NAD 911 03**	–
Profibus DP in-Line Connector	–	**490 NAD 911 04**	–
Profibus DP connector with Programming Port	–	**490 NAD 911 05**	–
Modicon Momentum front label replacement (set of 10)	–	**170 XTS 100 00**	–
Profibus DP User Guide		See page 103	–

(1) The Profibus device Master File (381 SWA 000 00) is supplied with the User Guide **870 USE 004 0●**, *or can be downloaded from the Schneider Electric website at* www.schneider-electric.us.

Modicon™ Momentum™ automation platform

M1/M1E processor adapters

Type	M1 processor adapters			
RAM memory	64 Kbit			256 Kbit
Flash memory	256 Kbit			
984 LL program memory	2.4 Kbit			12 Kbit
IEC program memory	–			160 Kbit
Data memory	2 Kbit			4 Kbit
Scan time	1 ms/K	0.63 ms/K	1 ms/K	0.63 ms/K
Clock speed	20 MHz	32 MHz	20 MHz	32 MHz
I/O points	2048			4096
I/O drops	Up to 2048 I/O points with Modbus Plus option adapter			80 with ProWORX™ 128 with Concept™
Power source	Power supply on-board the I/O bases			
Communication ports	1 RS 232 Modbus		1 RS 232 Modbus 1 RS 485 Modbus	1 RS 232 Modbus 1 I/O bus
IEC executive				Compatible
Type of module	171 CCS 700 00	171 CCS 700 10	171 CCS 780 00	171 CCS 760 00
Pages	68			

M1 processor adapters		M1E processor adapters			
512 Kbit		544 Kbit			
512 Kbit		512 Kbit	1 Mbit	512 Kbit	1 Mbit
18 Kbit					
240 Kbit		–	200 Kbit	–	200 Kbit
24 Kbit					
1 ms/K		0.3 ms/K			
32 MHz		50 MHz			
8192					
Up to 2048 I/O points with Modbus Plus™ option adapter	80 with ProWORX™ 128 with Concept™	Up to 2048 I/O points with Modbus Plus option adapter		80 with ProWORX 128 with Concept	
Power supply on-board the I/O bases					
1 RS 232 Modbus 1 RS 485 Modbus	1 RS 232 Modbus 1 I/O bus	1 Ethernet (Transparent Ready™ class B10) 1 RS 485 Modbus		1 Ethernet (Transparent Ready class B10) 1 I/O bus	
Compatible		–	Supplied	–	Supplied
171 CCC 780 10	**171 CCC 760 10**	**171 CCC 980 20**	**171 CCC 980 30**	**171 CCC 960 20**	**171 CCC 960 30**
68					

Modicon™ Momentum™ automation platform

M1/M1E processor adapters

Introduction

Modicon™ Momentum™ M1/M1E processor adapters are based on the Modicon 984 family of products. You can mount these adapters on Modicon Momentum I/O Bases to provide intelligence to the I/O. The processor adapter can quickly and independently solve logic, control its own local I/O (discrete or analog), and communicate to other control entities through one of a number of Modicon Momentum communication options. The processor adapter can turn an ordinary I/O Base into a PID controller or high-speed logic solver.
You can create your own controller from a number of different bases, and with other Modicon Momentum options, network your local logic solvers together into an intelligent subsystem as part of a larger Modicon application, or into a stand alone, integrally networked system with local controllers with extended I/O.

Modicon Momentum M1/M1E processor adapters can stand alone, or be mounted on a single Modicon Momentum I/O Base (with its own extended Modicon Momentum I/O connected to the I/O Bus Port on **171 CCS 760 00** processor adapter). It can also be mounted together with one of a variety of Modicon Momentum Option adapters – providing different network capabilities, a time-of-day clock, and a battery back-up system. The built-in flash memory is used to store the executive, allowing for convenient field upgrades of the operating system. The flash memory can also be used to back up your applications, creating a local copy of your program to be loaded back into RAM, thus providing original program file integrity. On the **171 CCS 780 00** processor adapter, the RS 485 port can be used to connect to dedicated devices such as an operator interface panel or a marquee, or used in a master/slave RS 485 network to connect to multiple devices.

The processor adapters can be programmed with Modsoft™ version 2.5 or greater, Concept™ version 2.1 or greater, ProWORX™ NxT version 2.0 or greater or ProWORX 32.

The following table describes the specifications of the Modicon Momentum M1/M1E processor adapters.

Specifications

Processor adapter	RAM Memory	Flash Memory	Scan Time	Modbus Port	I/O Bus Port	IEC Executive
171 CCS 700 00	64 K	256 K	1 ms/K	1 x RS 232C	–	–
171 CCS 700 10	64 K	256 K	0.63 ms/K	1 x RS 232C	–	–
171 CCS 760 00	256 K	256 K	0.63 ms/K	1 x RS 232C	1 x I/O Bus	Compatible
171 CCS 780 00	64 K	256 K	1 ms/K	1 x RS 232C 1 x RS 485	–	–
171 CCC 760 10	512 K	512 K	1 ms/K	1 x RS 232C	1 x I/O Bus	Compatible
171 CCC 780 10	512 K	512 K	1 ms/K	1 x RS 232C 1 x RS 485	–	Compatible
171 CCC 960 20	544 K	512 K	.3 ms/K	1 x Ethernet	1 x I/O Bus	–
171 CCC 960 30	544 K	1 Mb	.3 ms/K	1 x Ethernet	1 x I/O Bus	Supplied
171 CCC 980 20	544 K	512 K	.3 ms/K	1 x RS 485 1 x Ethernet	–	–
171 CCC 980 30	544 K	1 Mb	.3 ms/K	1 x RS 485 1 x Ethernet	–	Supplied

Programming Software for Modicon Momentum

Modicon Momentum processor adapters have a number of PC programming software options available. You can program your processor adapter via the Modbus RS 232 serial port, or with an M1E processor via Ethernet network.
If using a Modbus Plus Option adapter in conjunction with a Processor adapter, you can program via an SA85 card installed in a PC and connected to the same Modbus Plus network.

For more specific information, see the appropriate Modicon Momentum, ProWORX or Concept programming software literature and documentation.

Specifications:
pages 64 to 67

References:
page 68

Modicon™ Momentum™ automation platform

M1/M1E processor adapters

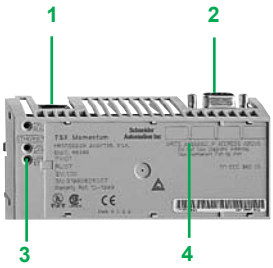

Description

A typical Modicon™ Momentum™ M1/M1E Processor adapter consists of the following components:

1 Modbus™ or Ethernet Port connector
2 Optional second port (Modbus or I/O bus)
3 LED indicators
4 Fill-in Label

Mounting

A typical system, showing a model **171 CCS 760 00** Modicon Momentum M1 processor adapter mounted on top of a Modicon Momentum I/O Base. The processor adapter controls the I/O it is mounted on, the local I/O, and can control externally configured I/O. You can also use a Modbus Plus™ Option adapter with the processor adapter to extend the system's I/O capacity.

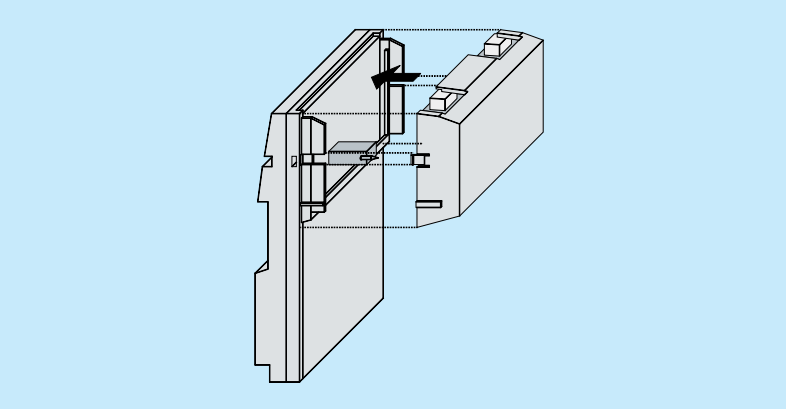

Specifications:
pages 64 to 67

References:
page 68

Modicon™ Momentum™ automation platform

M1/M1E processor adapters

Environment						
Type of processor			**171 CCS 700 00**	**171 CCS 700 10**	**171 CCS 780 00**	**171 CCS 760 00**
Temperature	Operating	**°C**	0...60			
	Storage	**°C**	- 40...85			
Relative humidity			5...96% (non-condensing)			
Altitude		**m**	2000 (6,500 ft.)			
Mechanical withstand (immunity)	To vibrations		57...150 Hz @ 1 gn 10...57 Hz @ 0.075 mm d.a			
	To shocks		± 15 gn peak, 11 ms, half sine wave			
Designed to meet			UL, CE, CUL, FM Class 1 Div. 2, NEMA 250 Type 1, and IP 20 conforming to IEC 529			
Specifications						
Central processing unit (CPU)			x 86 based			
Word length		**bit**	16			
Material			Lexan			
Voltage		**Vdc**	5.0 V (supplied by I/O Base)			
Voltage tolerance			± 5% (as supplied by I/O Base)			
RFI immunity/EMI susceptibility/Electrostatic discharge			Meets CE mark for open equipment. Open equipment should be installed in an industry standard enclosure, with access restricted to qualified service personnel			
Di-electric strength			RS 232 is non-isolated from logic common			
Indicator lights			Run and communication actived			
Power source			Power supply on-board the Modicon™ Momentum™ I/O Base			
Clock speed		**MHz**	20	32	20	32
Scan time		**ms/K**	1	0.63	1	0.63
Communication ports	1		Dedicated RS 232C Modbus™			
	2		N/A		Dedicated RS 485 Modbus	I/O Bus (derivative of INTERBUS™
Capacity	984 LL program memory	**K**	2.4			12
	IEC program memory	**K**	–			160
	Data memory	**K**	2			4
	Discrete I/O		2048 In/2048 Out (A total of 2048 words can be configured for discrete analog I/O, any mix up to the stated limits.)			2048 In/2048 Out
	Register I/O		2048 In/2048 Out (A total of 2048 words can be configured for discrete and analog I/O, any mix up to the stated limits.)			4096 words total
	I/O limit		–		- I/O local on Modbus - I/O can be extented using a Modbus Plus option adapter and Peer Cop (2048 In/Out)	8192 bits max. : - 4096 In/4096 Out on I/O Bus - I/O can be extented using a Modbus Plus option adapter and Peer Cop (2048 In/Out)
I/O bus addressing			–			80 I/O drops with ProWORX™ 128 I/O drops with Concept™

References:
page 68

Environment

Type of processor			171 CCC 760 10	171 CCC 780 10
Temperature	Operating	**°C**	0...60	
	Storage	**°C**	- 40...85	
Relative humidity			5...96% (non-condensing)	
Altitude		**m**	2000 (6,500 ft.)	
Mechanical withstand (immunity)	To vibrations		57...150 Hz @ 1 gn 10...57 Hz @ 0.075 mm d.a	
	To shocks		± 15 gn peak, 11 ms, half sine wave	
Designed to meet			UL, CE, CUL, FM Class 1 Div. 2, NEMA 250 Type 1, and IP 20 conforming to IEC 529	

Specifications

Central processing unit (CPU)			x 86 based	
Word length		**bit**	16	
Material			Lexan	
Voltage		**Vdc**	5.0 V (supplied by I/O Base)	
Voltage tolerance			± 5% (as supplied by I/O Base)	
RFI immunity/EMI susceptibility/Electrostatic discharge			Meets CE mark for open equipment. Open equipment should be installed in an industry standard enclosure, with access restricted to qualified service personnel	
Di-electric strength			RS 232 is non-isolated from logic common	
Indicator lights			Run and communication actived	
Power source			Power supply on-board the Modicon™ Momentum™ I/O Base	
Clock speed		**MHz**	32	
Scan time		**ms/K**	1	
Communication ports	1		Dedicated RS 232C Modbus	
	2		I/O Bus (derivative of INTERBUS)	Dedicated RS 485 Modbus
Capacity	984 LL program memory	**K**	18	
	IEC program memory	**K**	240	
	Data memory	**K**	24	
	Discrete I/O		8192 In/8192 Out (A total of 8192 bits can be configured for discrete and analog I/O, any mix up to the stated limits)	
	Register I/O		26048 In/26048 Out (A total of 26048 words can be configured for discrete and analog I/O, any mix up to the stated limits)	
	I/O limit		8192 bits max. : - 4096 In/4096 Out on I/O Bus - I/O can be extented using a Modbus Plus™ option adapter and Peer Cop (2048 In/Out)	- I/O local on Modbus™ - I/O can be extented using a Modbus Plus option adapter and Peer Cop (2048 In/Out)
I/O bus addressing			80 I/O drops with ProWORX™ , 128 I/O drops with Concept™	–

References:
page 68

Environment

Type of processor			171 CCC 960 20	171 CCC 980 20
Temperature	Operating	**°C**	0...60	
	Storage	**°C**	- 40...85	
Relative humidity			5...96% (non-condensing)	
Altitude		**m**	2000 (6,500 ft.)	
Mechanical withstand (immunity)	To vibrations		57...150 Hz @ 1 gn 10...57 Hz @ 0.075 mm d.a	
	To shocks		± 15 gn peak, 11 ms, half sine wave	
Designed to meet			UL, CE, CUL, FM Class 1 Div. 2, NEMA 250 Type 1, and IP 20 conforming to IEC 529	

Specifications

Central processing unit (CPU)			x 86 based	
Word length		**bit**	16	
Material			Lexan	
Voltage		**Vdc**	5.0 V (supplied by I/O Base)	
Voltage tolerance			± 5% (as supplied by I/O Base)	
RFI immunity/EMI susceptibility/Electrostatic discharge			Meets CE mark for open equipment. Open equipment should be installed in an industry standard enclosure, with access restricted to qualified service personnel	
Di-electric strength			Comm port is non-isolated from logic common	
Indicator lights			Processor adapter operating (RUN), Ethernet network status (LAN Act) and Ethernet network activity (LAN STS)	
Power source			Power supply on-board the Modicon™ Momentum™ I/O Base	
Flash memory		**K**	512	
Clock speed		**MHz**	50	
Scan time		**ms/K**	3	
Communication ports	1		Ethernet	
	2		I/O Bus (derivative of InterBus)	Dedicated RS 485 Modbus
Capacity	984 LL program memory	**K**	18	
	IEC program memory	**K**	–	
	Data memory	**K**	24	
	Discrete I/O		8192 In/8192 Out (A total of 8192 bits can be configured for discrete and analog I/O, any mix up to the stated limits)	
	Register I/O		26048 In/26048 Out (A total of 26048 words can be configured for discrete and analog I/O, any mix up to the stated limits)	
	I/O limit		8192 bits max. : - 4096 In/4096 Out on I/O Bus - I/O can be extented using a Modbus Plus™ option adapter and Peer Cop (2048 In/Out)	- I/O local on Modbus™ - I/O can be extented using a Modbus Plus option adapter and Peer Cop (2048 In/Out)
Transparent Ready services	Class		B10	
	Web services		"Rack Viewer" access to the product description and status, and to the island diagnostics "Data editor" access to the configuration functions and variables "Web page loader" software tool for loading user Web pages	
	Ethernet TCP/IP communication management services		Modbus Messaging (read/write data words) I/O Scanning	
I/O bus addressing			80 I/O drops with ProWORX™, 128 I/O drops with Concept	–

References:
page 68

Environment

Type of processor			171 CCC 960 30	171 CCC 980 30
Temperature	Operating	**°C**	0...60	
	Storage	**°C**	- 40...85	
Relative humidity			5...96% (non-condensing)	
Altitude		**m**	2000 (6,500 ft.)	
Mechanical withstand (immunity)	To vibrations		57...150 Hz @ 1 gn 10...57 Hz @ 0.075 mm d.a	
	To shocks		± 15 gn peak, 11 ms, half sine wave	
Designed to meet			UL, CE, CUL, FM Class 1 Div. 2, NEMA 250 Type 1, and IP 20 conforming to IEC 529	

Specifications

Central processing unit (CPU)			x 86 based IEC Executive	
Word length		**bit**	16	
Material			Lexan	
Voltage		**Vdc**	5.0 V (supplied by I/O Base)	
Voltage tolerance			± 5% (as supplied by I/O Base)	
RFI immunity/EMI susceptibility/Electrostatic discharge			Meets CE mark for open equipment. Open equipment should be installed in an industry standard enclosure, with access restricted to qualified service personnel	
Di-electric strength			Comm port is non-isolated from logic common	
Indicator lights			Processor adapter operating (RUN), Ethernet network status (LAN Act) and Ethernet network activity (LAN STS)	
Power source			Power supply on-board the Modicon™ Momentum™ I/O Base	
Flash memory		**Mb**	1	
Clock speed		**MHz**	50	
Scan time		**ms/K**	3	
Communication ports	1		Ethernet	
	2		I/O Bus (derivative of InterBus)	Dedicated RS 485 Modbus
Capacity	984 LL program memory	**K**	18	
	IEC program memory	**K**	200	
	Data memory	**K**	24	
	Discrete I/O		8192 In/8192 Out (A total of 8192 bits can be configured for discrete and analog I/O, any mix up to the stated limits)	
	Register I/O		26048 In/26048 Out (A total of 26048 words can be configured for discrete and analog I/O, any mix up to the stated limits)	
	I/O limit		8192 bits max. : - 4096 In/4096 Out on I/O Bus - I/O can be extented using a Modbus Plus™ option adapter and Peer Cop (2048 In/Out)	- I/O local on Modbus™ - I/O can be extented using a Modbus Plus option adapter and Peer Cop (2048 In/Out)
Transparent Ready services	Class		B10	
	Web services		"Rack Viewer" access to the product description and status, and to the island diagnostics "Data editor" access to the configuration functions and variables "Web page loader" software tool for loading user Web pages	
	Ethernet TCP/IP communication management services		Modbus Messaging (read/write data words) I/O Scanning	
I/O bus addressing			80 I/O drops with ProWORX™, 128 I/O drops with Concept™	–

References:
page 68

Modicon™ Momentum™ automation platform

M1/M1E processor adapters

171 CCS 7●0 ●0

171 CCC 7●0 10

171 CCC 9●0 20/30

M1/M1E processor adapters

RAM Memory	Comm Port(s)	Clock Speed	Reference	Weight kg (oz)
64 K	1 Modbus™	20 MHz	**171 CCS 700 00**	0.042 (1.5)
	1 Modbus	32 MHz	**171 CCS 700 10**	0.042 (1.5)
	2 Modbus	20 MHz	**171 CCS 780 00**	0.042 (1.5)
256 K	1 Modbus, 1 I/O Bus	32 MHz	**171 CCS 760 00**	0.042 (1.5)
512 K	1 Modbus, 1 I/O Bus	32 MHz	**171 CCC 760 10**	0.042 (1.5)
	2 Modbus	32 MHz	**171 CCC 780 10**	0.042 (1.5)
544 K *(1)*	1 Modbus, 1 Ethernet	50 MHz	**171 CCC 980 20**	0.042 (1.5)
	1 Ethernet, 1 I/O Bus	50 MHz	**171 CCC 960 20**	0.042 (1.5)
544 K, IEC Exec *(1)*	1 Modbus, 1 Ethernet	50 MHz	**171 CCC 980 30**	0.042 (1.5)
	1 Ethernet, 1 I/O Bus	50 MHz	**171 CCC 960 30**	0.042 (1.5)

(1) Transparent Ready™ Class B10 (embedded standard Web server - standard Ethernet TCP/IP communication services). For more details, consult our catalog "Transparent Ready, Ethernet TCP/IP and Web technologies".

Specifications:
page 64

Modicon™ Momentum™ automation platform

M1/M1E processor adapters

Connection accessories and documentation

Description	Type	Sold in lot of	Reference	Weight kg (oz)
RS 232 communication cable RJ45 to RJ45	1 m (3 ft)	–	**110 XCA 282 01**	–
	3 m (10 ft)	–	**110 XCA 282 02**	–
	6 m (20 ft)	–	**110 XCA 282 03**	–
RS 485 cable connector T for RJ45	–	–	**170 XTS 040 00**	–
RS 485 terminating (RJ45 resistor plugs)	–	2	**170 XTS 021 00**	–
D-shell adapters	RJ45 to 9-pin (for AT serial port)	–	**110 XCA 203 00**	–
	RJ45 to 25-pin (for XT serial port)	–	**110 XCA 204 00**	–
Ground clamp	–	–	**424 244 739**	–
ConneXium™ cabling system	Ethernet cabling for M1E processor adapters	–	See page 76	–
Concept™ software	–	–	See page 95	–
ProWORX™ software	–	–	See page 99	–
Processor adapters user guide	–	–	See page 103	–

Modicon™ Momentum™ automation platform

Option adapters

Configuration	Modbus Plus™ option adapters	
Communication network	Modbus Plus	
Communication port(s)	1 Modbus Plus	2 redundant Modbus Plus
Comm port connector	9-pin D-shell	
Time-of-day clock	On-board, ± 13 sec/day accuracy	
Back-up battery	User-replaceable 2/3 AA Lithium	
Voltage	5 Vdc supplied by I/O base	
Operating temperature	0 ... 60°C	
Humidity	5 ... 95%, relative noncondensing	
Shock	± 15 g peak, 11 ms, half-sine wave	
Vibration	10 ... 57 Hz @ 0,075 mm d.a.	
Type of module	172 PNN 210 22	172 PNN 260 22
Page	75	

Serial option adapter

General-purpose serial communications

1 software-selectable RS 232/RS 485 serial port

9-pin D-shell

On-board, ± 13 sec/day accuracy

User-replaceable 2/3 AA Lithium

5 Vdc supplied by I/O base

0 ... 60°C

5 ... 95%, relative noncondensing

± 15 g peak, 11 ms, half-sine wave

10 ... 57 Hz @ 0,075 mm d.a.

172 JNN 210 32

75

Modicon™ Momentum™ automation platform

Option adapters

Introduction

Modicon™ Momentum™ option adapters, mounted on Modicon Momentum I/O bases, can be used to enhance the capabilities of the Modicon Momentum processor adapters that mount on top of the option adapter. These option adapters allow you to network your local logic solvers together into an intelligent subsystem as part of a larger Schneider Electric application, or into a stand alone, integrally networked system with local controllers with extended I/O.

Modicon Momentum option adapter models include:
172 PNN 210 22 - one Modbus Plus™ communication port
172 PNN 260 22 - two redundant Modbus Plus communication ports
172 JNN 210 32 - one general-purpose serial communication port, RS 232 or RS 485 selectable

Each of these option adapters provides an on-board, TOD *(Time-Of-Day)* clock that is available to the application residing in the processor adapter. The clock is useful for the scheduling of events, time-stamping operations and operator interface requirements. In addition, each option adapter contains a battery-backup system that maintains the application and its variables in the event of a power outage to the processor adapter. The option adapter's convenient side-door access allows for quick replacement of the single 2/3 AA Lithium battery.

In addition to the TOD clock and battery backup features, the **172 PNN 210 22** adapter allows you to add networking to the intelligent I/O base. Model **172 PNN 260 22** allows you to add redundantly-cabled networking to the I/O base. This opens the Modicon Momentum product line to a broad spectrum of applications. You can use the port to connect to other processors, such as:

- Other Modicon Momentum processor/option adapters
- Other PLCs enabled with Modbus Plus
- Modicon Momentum Modbus Plus communication adapters and I/O bases
- Other third party devices using Modbus Plus to communicate

Model **172 JNN 210 32** allows you to add a second, defacto-industry standard Modbus port (selectable RS 232/485) to the I/O base. You can use the port to connect to other processors, such as other Modicon Momentum processor/option adapters, and to other devices, such as operator interface panels and display marquees.

Programming software for Modicon Momentum

Modicon Momentum processor adapters have a number of PC programming software options available. You can program your processor adapter via the Modbus RS 232 serial port, or if using a Modbus Plus option adapter in conjunction with a processor adapter, via an SA85 card installed in a PC and connected to the same Modbus Plus network. For more specific information, see the appropriate Modicon™ Momentum, ProWORX™, and Concept™ programming software documentation.

Modicon™ Momentum™ automation platform

Option adapters

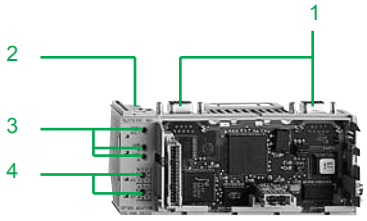

Description

A typical Modicon™ Momentum™ option adapter consists of the following components :

1 9-pin D-shell connector(s) for Modbus Plus™ communications
2 Batttery compartment
3 LED indicators
4 Address switches for Modbus Plus

Mounting

Modicon Momentum option adapters provide the processor adapters with additional networking capabilities, a time-of-day clock, and a battery back-up. The option adapters also snap onto the I/O base; in this figure, the processor adapter stacks on top. Here, the option adapter is used in conjunction with the processor adapter to extend the system's I/O capacity.

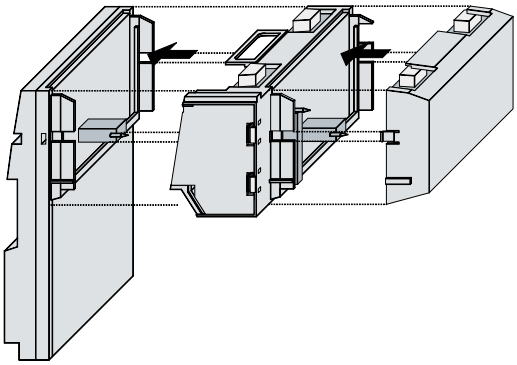

Modicon™ Momentum™ automation platform

Option adapters

Specifications

Model No			172 PNN 210 22	172 PNN 260 22	172 JNN 210 32
Time-of-day clock			On-board, ± 13 s/day accuracy		
Battery	Type		User-replaceable 2/3 AA Lithium		
	Service life		< 30 days from the time a battery-low indication is received, to actual battery failure @ 40 °C maximum service life ambient temperature with the system continuously powered down		
	Shelf life		In excess of 5 years at room temperature		
Communication port(s)			One Modbus Plus™ port Drop address range 1...64	Two redundant Modbus Plus ports	General-purpose serial port RS 232 or RS 485 selectable
Comm port connector(s)			9-pin D-shell		
Operating temperature		**°C**	0...60		
Storage temperature		**°C**	- 40...85		
Relative humidity			5...95% (non-condensing)		
Altitude		**m (ft)**	2000 (6,562)		
Shock			± 15 gn peak, 11ms, half sine wave		
Vibration		**Hz**	57...150 @ 1 gn 10...57 @ 0.075 mm d.a.		
Height		**in (mm)**	1.01 (25.) [2.10 (58.3) on battery side]		
Width		**in (mm)**	5.57 (143.1)		
Depth		**in (mm)**	2.36 (60.06)		
Weight		**oz (g)**	3.00 (85.05)		
Material			Lexan		
Voltage		**Vdc**	5.0 (supplied by I/O base)		
Voltage tolerance			± 5% (as supplied by I/O base)		
RFI immunity/EMI susceptibility/Electrostatic discharge			Meets CE mark for open equipment. Open equipment should be installed in an industry standard enclosure, with access resricted to qualified service personnel		
Di-electric strength		**Vdc**	500		
Designed to meet			UL, CE, CSA, NEMA 250 Type 1, and IP 20 conforming to IEC 529		UL, CSA, NEMA 250 Type 1, and IP 20 conforming to IEC 529, FM Class I, Div. II
Packaging			Standard Modicon™ Momentum™ option adaptator		
Indicator lights			Communication active light		
Power source			Power supply on-board the Modicon Momentum I/O base		

Modicon™ Momentum™ automation platform

Option adapters

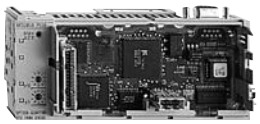

172 PNN 210 22

172 PNN 260 22

172 JNN 210 32

Option adapter modules

Description	Reference	Weight kg (oz)
Modbus Plus™ option adapter, single Port	**172 PNN 210 22**	0.070 (2.5)
Modbus Plus option adapter, dual redundant ports	**172 PNN 260 22**	0.070 (2.5)
Serial option adapter, single serial port	**172 JNN 210 32**	0.070 (2.5)

Accessories

Description	Use		Length	Reference	Weight kg
	From	To			
Standard Modbus Plus cables	T-junction box	T-junction box	30 m (100 ft)	**490 NAA 271 01**	–
			150 m (500 ft)	**490 NAA 271 02**	–
			300 m (1000 ft)	**490 NAA 271 03**	–
			450 m (1500 ft)	**490 NAA 271 04**	–
			1500 m (5000 ft)	**490 NAA 271 06**	–
Modbus Plus Drop cables	Communication modules for Modicon Momentum I/O bases	T-junction box	2.4 m (8 ft)	**900 NAD 211 10**	0.530
			6 m (20 ft)	**990 NAD 211 30**	0.530
Modbus Plus RS 485 cables	–	–	25 m (10.0 in)	**170 MCI 020 10**	–
			1 m (3 ft)	**170 MCI 020 36**	–
RS 485 master communication cable (RJ45/RJ45)	–	–	0.3 m (1 ft)	**170 MCI 041 10**	–
Modbus Plus RJ45 cable	–	–	3 m (10 ft)	**170 MCI 021 20**	–
Modbus Plus RJ45 cables double-ended	–	–	3 m (10 ft)	**170 MCI 021 80**	–
			10 m (30 ft)	**170 MCI 020 80**	–
RS 232 communication cables (RJ45/RJ45)	–	–	1 m (3 ft)	**110 XCA 282 01**	–
			3 m (10 ft)	**110 XCA 282 02**	–
			6 m (20 ft)	**110 XCA 282 03**	–

Description	Use	Reference	Weight kg
Modbus Plus taps	IP 20 junction box for tap-off connection (T), integrate the terminator. Requires the wiring tools 043 509 383	**990 NAD 230 00**	0.230
	IP 65 junction box for tap-off connection (T), supports 1 RJ45 connector on front panel for terminal	**990 NAD 230 10**	–
Modbus Plus line connector (9-Pin Sub-D)	Communication module connection	**AS MBKT 085**	–
Modbus Plus line terminators (sold in lot of 2)	2 impedance adapters for box (IP 20) 990 NAD 230 00 (replacement part)	**AS MBKT 185**	–
	2 impedance adapters for box (IP 65) 990 NAD 230 10	**990 NAD 230 11**	–
D-shell adapters	RJ45 to 9-pin (for AT serial port)	**110 XCA 203 00**	–
	RJ45 to 25-pin (for XT serial port)	**110 XCA 204 00**	–

Description	Sold in lots of	Reference	Weight kg (oz)
RS 485 (9-Pin Sub-D) **cable connector T for RJ45**	–	**170 XTS 040 00**	–
RJ45 shielded connectors	25	**170 XTS 022 00**	–
Modbus Plus terminating RJ45 resistor plugs	2	**170 XTS 021 00**	–
RS 485 (RJ45) **cable connector T for RJ45**	–	**170 XTS 041 00**	–
RS 485 Multi-Master RJ45 shunt plugs	2	**170 XTS 042 00**	–
Modbus Plus (9-Pin Sub-D) **cable connector T for RJ45**	–	**170 XTS 020 00**	–
Ground clamp	–	**424 244 739**	–
Wiring tool Mounting trunk and tap wires on the IP20 junction box 990 NAD 230 00	–	**043 509 383**	–

Ethernet network

Cabling system

Infrastructure

Introduction

Schneider Electric offers copper and fiber optic Ethernet cables for wiring your IP 20 and IP 67 devices.

Examples

Combined IP 20 and IP 67 wiring (copper)

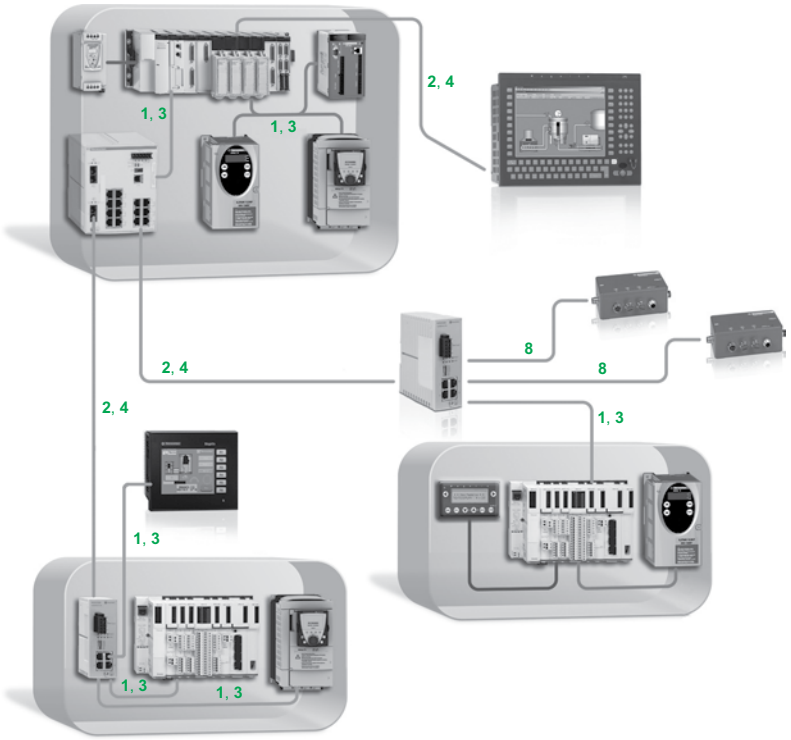

For key:
1, 3: *Straight copper cordsets*
2, 4: *Crossed copper cordsets*
8: *Cables with IP 67 connector*
see pages 78 and 79.

Ethernet network

Cabling system

Infrastructure

Examples (continued)

Combined Copper and Fiber wiring

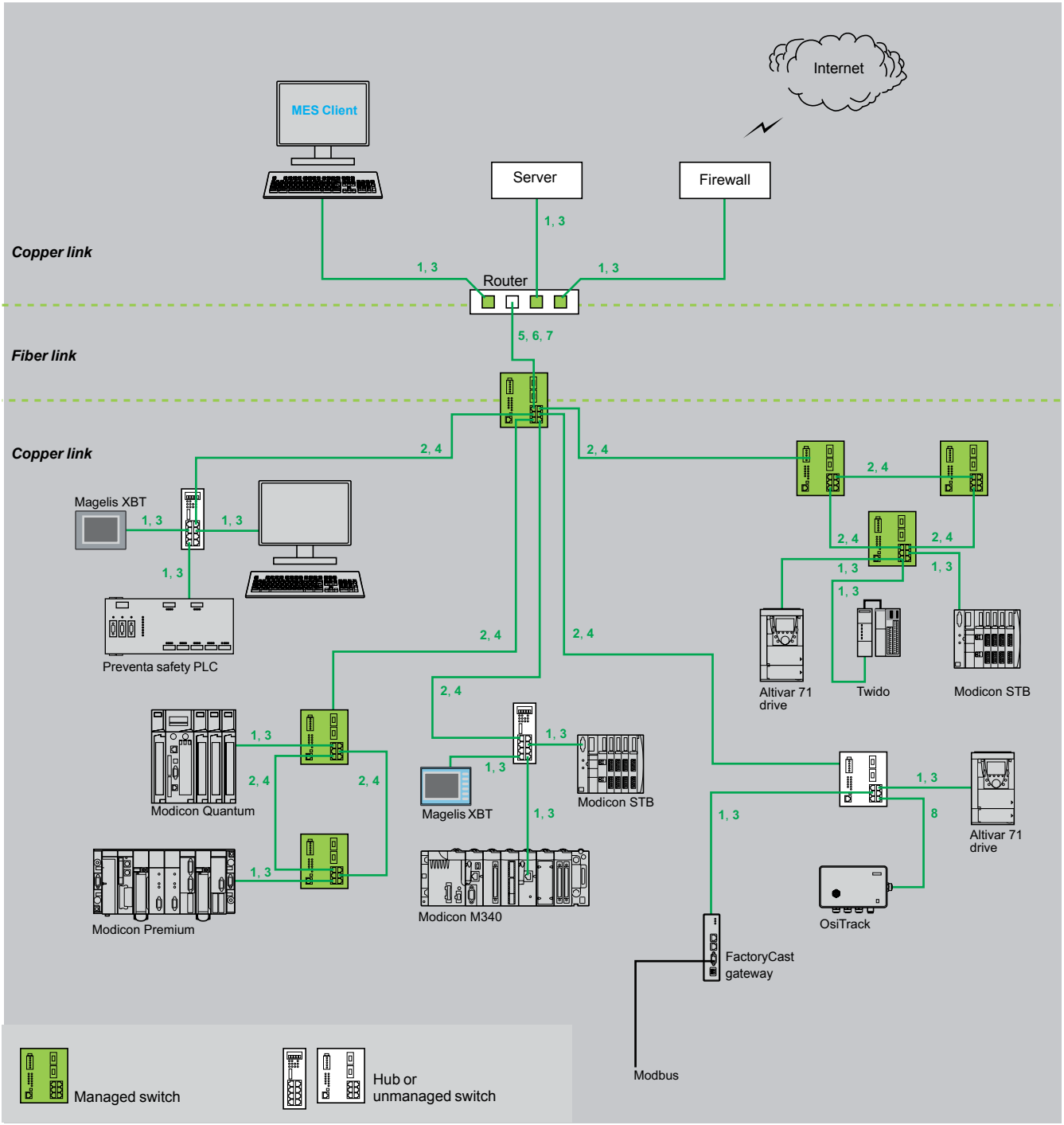

For key:
1, 3: *Straight cables*
2, 4: *Crossed cord cables*
5, 6, 7: *Fiber optic cables*
8: *Cables with IP 67 connector*
see pages 78 and 79.

Ethernet network

Cabling system

ConneXium™ connection components

Shielded copper connection cables

ConneXium™ shielded connection cables are available in two versions to meet current standards and approvals:

- **EIA/TIA 568 shielded twisted pair cables for e market**

  These cables conform to:
  - EIA/TIA-568 standard, category CAT 5E
  - IEC 11801/EN 50173 standard, class D

  Their fire resistance conforms to:
  - NF C32-070# C2 classification
  - IEC 322/1 standards
  - Low Smoke Zero Halogen (LSZH)

- **EIA/TIA 568 shielded twisted pair cables for UL market**

  The cable material is:
  - CEC type FT-
  - NEC type CM

490 NT● 000 ●●

EIA/TIA 568 shielded twisted pair cables for CE market

Description	Preformed at both ends	Rep.	Length m *(ft)*	Reference	Weight kg
Straight cables	2 RJ45 connectors For connection to terminal devices (DTE)	1	2 *(6.6)*	**490 NTW 000 02**	–
			5 *(16.4)*	**490 NTW 000 05**	–
			12 *(39.4)*	**490 NTW 000 12**	–
			40 *(131.2)*	**490 NTW 000 40**	–
			80 *(262.5)*	**490 NTW 000 80**	–
Crossed cord cables	2 RJ45 connectors For wiring diagrams between hubs, switches and transceivers	2	5 *(16.4)*	**490 NTC 000 05**	–
			15 *(49.2)*	**490 NTC 000 15**	–
			40 *(131.2)*	**490 NTC 000 40**	–
			80 *(262.5)*	**490 NTC 000 80**	–

EIA/TIA 568 shielded twisted pair cables for UL market

Description	Preformed at both ends	Rep.	Length m *(ft)*	Reference	Weight kg
Straight cables	2 RJ45 connectors For connection to terminal devices (DTE)	3	2 *(6.6)*	**490 NTW 000 02U**	–
			5 *(16.4)*	**490 NTW 000 05U**	–
			12 *(39.4)*	**490 NTW 000 12U**	–
			40 *(131.2)*	**490 NTW 000 40U**	–
			80 *(262.5)*	**490 NTW 000 80U**	–
Crossed cord cables	2 RJ45 connectors For wiring diagrams between hubs, switches and transceivers	4	5 *(16.4)*	**490 NTC 000 05U**	–
			40 *(131.2)*	**490 NTC 000 40U**	–
			80 *(262.5)*	**490 NTC 000 80U**	–

"Do it Yourself" cable and connectors

The "Do It Yourself" offer is comprised of 2 references for "field installable" connectors (M12 and RJ45) and one reference for spooled cable measuring 300 m. The product are intented for use in industrial Ethernet networks supporting transmission rates up to 100 Mbit/s over the combined maximum cable lenght up to 80 m.
Quick, on-the-floor assembly is accomplished with only a knife and pliers.

Description	According to	Length m *(ft)*	Reference	Weight kg
Ethernet copper cable 2 shielded twisted pairs 24 AWG	EIA/TIA-568 (80 m max. link length) UL 508-CM, CE EN 50173 Class D	300 m *(1000)*	**TCS ECN 300R2**	–
RJ45 connector IP 20	EIA/TIA-568-D, category CAT 5E, CE	–	**TCS EK3 MDS**	–
M12 connector D-Code, IP 65/67	IEC 60176-2-101, EN 50173 Class D	–	**TCS EK1 MDRS**	–

(1) For key to numbers, see pages76 and 77.

Ethernet network

Cabling system

ConneXium™ connection components

490 NOC 000 05

490 NOT 000 05

490 NOR 000 05

TCS EAA F1LF● 00

Glass fiber optic cables

These glass fiber optic cables are for wiring:
- To a terminal device (DTE)
- Between hubs, transceivers and switches

Description	Preformed at both ends	Rep.	Length m *(ft)*	Reference	Weight kg
Glass fiber optic cables	1 SC connector 1 MT-RJ connector	5	5 *(16.4)*	**490 NOC 000 05**	–
	1 ST connector (BFOC) 1 MT-RJ connector	6	5 *(16.4)*	**490 NOT 000 05**	–
	2 MT-RJ connectors	7	3 *(9.8)*	**490 NOR 000 03**	–
			5 *(16.4)*	**490 NOR 000 05**	–

Separate parts for TCS ESM switches

Description	Optical fiber	Type	Reference	Weight kg
Fiber optic modules for Gigabit ports with LC connector *(1)*	Multi-mode 50/125 µm or 62.5/125µm	1000BASE-SX	**TCS EAA F1LFU00**	0.040
	Single mode 9/125 µm	1000BASE-LH	**TCS EAA F1LFH00**	0.040
	Multi-mode 50/125 µm or 62.5/125 µm Single mode 62.5/125 µm	1000BASE-LX	**TCS EAA F1LFS00**	0.040
Configuration backup key	Via the USB port on the front of the switch, used to: - save and retrieve the switch configuration - update the internal software		**TCS EAM 0100**	–

(1) Dimensions W x H X D = 20 x 18 x 50 mm.

Connection components for IP 67 switch

Description	Preformed at both ends	Rep.	Length m *(ft)*	Reference	Weight kg
Copper cables	1 IP 67 4-way M12 connector and 1 RJ45 connector	8	1 *(3.3)*	**TCS ECL 1M3M 1S2**	–
			3 *(9,8)*	**TCS ECL 1M3M 3S2**	–
			10 *(32.8)*	**TCS ECL 1M3M 10S2**	–
			25 *(82)*	**TCS ECL 1M3M 25S2**	–
			40 *(131.2)*	**TCS ECL 1M3M 40S2**	–
	2 IP 67 4-way M12 connectors	–	1 *(3.3)*	**TCS ECL 1M1M 1S2**	–
			3 *(9,8)*	**TCS ECL 1M1M 3S2**	–
			10 *(32.8)*	**TCS ECL 1M1M 10S2**	–
			25 *(82)*	**TCS ECL 1M1M 25S2**	–
			40 *(131.2)*	**TCS ECL 1M1M 40S2**	–
Power cables	Female M12 straight connector	–	2 *(6.6)*	**XZC P1164L2**	–
			5 *(16.4)*	**XZC P1164L5**	–
	Female M12 elbowed connector	–	2.5 *(8.2)*	**XZC P1264L2**	–
			5 *(16.4)*	**XZC P1264L5**	–
Power connectors	Female M12 straight connector	–	–	**XZC C12 FDM 50B**	–
	Female M12 elbowed connector	–	–	**XZC C12 FCM 50B**	–
M12/RJ45 adaptor	IP 67 female 4-way M12 connector and female RJ45 connector	–	–	**TCS EAA F11F13F00**	–

Ethernet network

Cabling system

ConneXium™ hub

Introduction

Hubs *(concentrators)* are used for transmitting signals between several media ports.
Hubs are “plug and play” devices that do not need any configuration.
The use of hubs makes it possible to create the following topologies:

- Star topology using hubs
- Tree topology using hubs

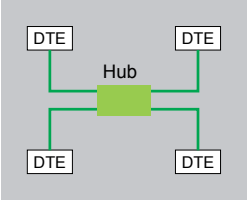

Star topology

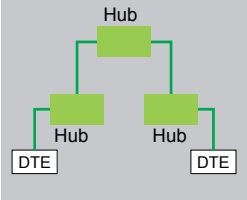

Tree topology

Specifications and reference

Hubs			
Interfaces	Copper cable ports	Number and type	4 x 10BASE-T ports
		Shielded connectors	RJ45
		Medium	Shielded twisted pair, category CAT 5E
		Total length of pair	100 m
	Fiber optic ports	Number and type	–
Topology	Number of cascaded hubs		max. 4
	Number of hubs in a ring		–
Redundancy			P1 and P2 redundant power supplies
Power supply	Voltage		24 V (18…32) ⎓, safety extra low voltage (SELV)
	Power consumption		80 mA (130 max. at 24 V ⎓)
	Removable connector		5-way
Operating temperature			0…+ 60 °C
Relative humidity			10…95% non condensing
Degree of protection			IP 30
Dimensions		W x H x D	40 x 125 x 80 mm
Mounting			On symmetrical DIN rail, 35 mm wide
Weight			0.530 kg
Conformity to standards			cUL 60950, UL 508 and CSA 22.2 No. 142, UL 1604 and CSA 22.2 No. 213 Class 1 Division 2, CE, GL, C-Tick
			FM 3810, FM 3611 Class 1 Division 2
LED indicators			Power supply, activity, link
Alarm relay			Detected power supply fault, detected Ethernet network fault, or detected communication port fault (1 A max. volt-free contact at 24 V ⎓)
Reference			**499 NEH 104 10**

Ethernet network

Cabling system

ConneXium™ transceiver

Introduction

The use of ConneXium™ transceivers makes it possible to perform the following:

- Creation of linear fiber optic bus topologies, for products with twisted pair cable Ethernet connection
- Interfacing products with twisted pair cable Ethernet connection with a fiber optic cable

Transceivers are “plug and play” devices that do not need any configuration.

ConneXium transceivers provide fiber optic wiring for transmission in areas subject to interference (high levels of electromagnetic interference) and for long distance communications.

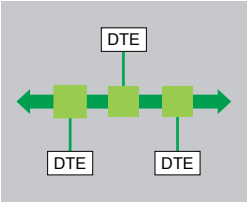

Linear topology on optical fiber

Specifications and reference

Transceivers			
Interfaces	Copper cable ports	Number and type	1 x 100BASE-TX port
		Shielded connectors	RJ45
		Medium	Shielded twisted pair, category CAT 5E
		Total length of pair	100 m
	Fiber optic ports	Number and type	1 x 100BASE-FX port
		Connectors	SC
		Medium	Multi-mode optical fiber
		Length of optical fiber	
		50/125 µm fiber	3000 m *(1)*
		62.2/125 µm fiber	3000 m *(1)*
		Attenuation analysis	
		50/125 µm fiber	8 dB
		62.2/125 µm fiber	11 dB
Redundancy			P1 and P2 redundant power supplies
Power supply	Voltage		24 V (18…32) ⎓, safety extra low voltage (SELV)
	Power consumption		160 mA (190 max. at 24 V ⎓)
	Removable connector		5-way
Operating temperature			0…+ 60 °C
Relative humidity			10…95% non condensing
Degree of protection			IP 20
Dimensions		W x H x D	47 x 135 x 111 mm
Mounting			On symmetrical DIN rail, 35 mm wide
Weight			0.230 kg
Conformity to standards			cUL 60950, UL 508 and CSA 22.2 No. 142, UL 1604 and CSA 22.2 No. 213 Class 1 Division 2, CE, GL, C-Tick
LED indicators			P1 and P2 power supplies, Ethernet link/port status
Alarm relay			Detected power supply fault, detected Ethernet network fault, or detected communication port fault (1 A max. volt-free contact at 24 V ⎓)
Reference			**499 NTR 101 00**

(1) Length dependent on the attenuation analysis and attenuation of the optical fiber (typical value: 2000 m).

Ethernet network

Cabling system

ConneXium™ unmanaged switches

Introduction

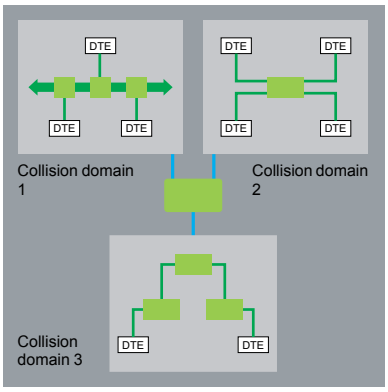

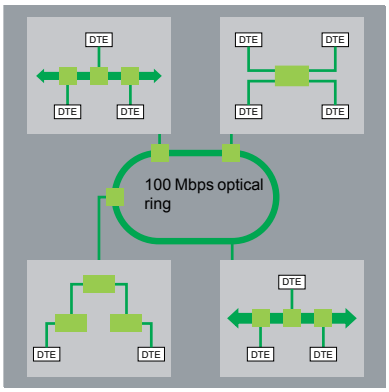

Switches are used to increase the limits of architectures – based on hubs or transceivers – by separating collision domains.
Higher layer communication is provided between the ports, and collisions at link layer are not propagated (filtering). Switches improve performance by better allocation of the pass band due to the reduction of collisions and the network load.
Certain Connexium™ switch models also enable redundant architectures to be created on twisted pair copper ring or fiber optic.

Switches are "plug & play" devices that do not need any configuration. They can also be managed remotely via the SNMP or HTTP protocols for monitoring and diagnostics purposes.

Specifications and references: twisted pair

Switches			Copper twisted pair, unmanaged			
Interfaces	Copper cable ports	Number and type	5 x 10BASE-T/ 100BASE-TX ports		8 10BASE-T/100BASE-TX ports	
		Shielded connectors	M12 (type D)		RJ45	
		Medium	Shielded twisted pair, category CAT 5E			
		Total length of pair	100 m			
	Ethernet services		Storage and re-routing of received data, auto MDI/MDX, automatic negotiation of 10/100 Mbit/s and duplex mode, automatic change of polarity		–	
Topology	Number of switches	Cascaded	Unlimited			
		Redundant in a ring	–			
Redundancy			–		P1 and P2 redundant power supplies	
Power supply	Voltage		24 V ⎓ (18…32) safety extra low voltage (SELV)			
	Power consumption	mA max.	100		125 (290 max.)	
	Removable connector		5-way M12 (type A, male)		5-way	
Operating temperature			0…+ 60 °C			
Relative humidity			–		10…95% non condensing	
Degree of protection			IP 67		IP 20	
Dimensions		W x H x D	60 x 126 x 31 mm		47 x 135 x 111 mm	
Mounting			On symmetrical DIN rail, 35 mm wide			
Weight			0.210 kg		0.230 kg	
Conformity to standards			cUL 508 and CSA 22.2 No. 142		cUL 60950, UL 508 and CSA 22.2 No. 142, UL 1604 and CSA 22.2 No. 213 Class 1 Division 2, CE, GL, C-Tick	
LED indicators			Power supply, link status, line activity		P1 and P2 power supplies, Ethernet link/port status	
Alarm relay			–		Detected power supply fault, detected Ethernet network fault, or detected communication port fault (1 A max. volt-free contact at 24 V ⎓)	
Reference			**TCS ESU 051F0**		**499 NES 181 00**	
IP 67 cordsets						
Ethernet cordsets			Preformed at each end, see page 79			
Power supply cables			Preformed at each end with M12 female straight connectors		Preformed at each end with female M12 angled connectors	
			Length 2 m	Length 5 m	Length 2 m	Length 5 m
Reference			**XZC P1164L2**	**XZC P1164L5**	**XZC P1264L2**	**XZC P1264L5**
Spare power connectors			Female M12 straight connector		Female M12 angled connector	
Reference			**XZC C12 FDM 50B**		**XZC C12 FCM 50B**	

Specifications and references: 3, 4 and 5 ports, twisted pair, fiber optic

Switches			Copper twisted pair, unmanaged		
Interfaces	Copper cable ports	Number and type	3 x 10BASE-T/ 100BASE-TX ports	4 x 10BASE-T/ 100BASE-TX ports	5 x 10BASE-T/ 100BASE-TX ports
		Shielded connectors	RJ45		
		Medium	Shielded twisted pair, category CAT 5E		
		Total length of pair	100 m		
	Fiber optic ports	Number and type	–	1 x 100BASE-FX ports	–
		Connectors	–	Duplex SC	–
		Medium	–	Multi-mode optical fiber	–
		Length of optical fiber			
		50/125 µm fiber	–	5000 m *(1)*	–
		62,2/125 fiber	–	4000 m *(1)*	–
		Attenuation analys			
		50/125 µm fiber	–	8 dB	–
		62,2/125 µm fiber	–	11 dB	–
	Ethernet services		Storage and re-routing of received data, auto MDI/MDX (automatic switching depending on whether cables are straight or crossed), automatic negotiation of 10/100 Mbit/s and duplex mode, automatic change of polarity		
Topology	Number of switches	Cascaded	Unlimited		
		Redundant in a ring	–		
Redundancy			–		
Power supply	Voltage, safety extra low voltage (SELV)		⎓ 24 V (⎓ 9,6…32 V)		
	Power consumption		Max. 2,2 W	Max. 3,9 W	Max. 2,2 W
	Connector		3 way removable connector		
Operationg température			0…+ 60°C		
Relative humidity			Max. 95 % non condensing		
Degree of protection			IP 30		
Dimensionss		W x H x D	25 x 114 x 79 mm		
Weight			0,113 kg	0,120 kg	0,113 kg
Conformity to standards			UL 508 and CSA 22.2 No.142 IEC/EN 61131-2, IEC 60825-1 class 1, CISPR 11A		
LED indicators			Power supply, copper port activity, 10 or 100 Mbit/s data rate		
			–	Fiber port state and activity	–
Alarm relay			–		
Référence			**TCS ESU 033FN0**	**TCS ESU 043F1N0**	**TCS ESU 053FN0**

(1) Length dependent on the attenuation analysis and attenuation of the fiber optic (typical value: 2,000 m).

Ethernet network

Cabling system

ConneXium™ unmanaged switches

Specifications and references: 5 ports, twisted pair and fiber optic

Switches			Copper twisted pair and fiber optic, unmanaged			
Interfaces	Copper cable ports	Number and type	4 x 10BASE-T/ 100BASE-TX ports	3 x 10BASE-T/ 100BASE-TX ports	4 x 10BASE-T/ 100BASE-TX ports	3 x 10BASE-T/ 100BASE-TX ports
		Shielded connectors	RJ45			
		Medium	Shielded twisted pair, category CAT 5E			
		Total length of pair	100 m			
	Fiber optic ports	Number and type	1 x 100BASE-FX port	2 x 100BASE-FX ports	1 x 100BASE-FX port	2 x 100BASE-FX ports
		Connectors	SC			
		Medium	Multi-mode optical fiber		Single mode optical fiber	
		Length of optical fiber				
		50/125 µm fiber	5,000 m *(1)*		–	
		62.2/125 µm fiber	4,000 m *(1)*		–	
		9/125 µm fiber	–		32,500 m *(2)*	
		Attenuation analysis				
		50/125 µm fiber	8 dB		–	
		62.2/125 µm fiber	11 dB		–	
		9/125 µm fiber	–		16 dB	
Topology	Number of switches	Cascaded	Unlimited			
		Redundant in a ring	–			
Redundancy			P1 and P2 redundant power supplies			
Power supply	Voltage		24 V ⎓ (18…32), safety extra low voltage (SELV)			
	Power consumption	mA max.	200	240	200	240
	Removable connector		5-way			
Operating temperature			-40...+70 °C			
Relative humidity			10…95% non condensing			
Degree of protection			IP 20			
Dimensions		W x H x D	47 x 135 x 111 mm			
Mounting			On symmetrical DIN rail, 35 mm wide			
Weight			0.330 kg	0.335 kg	0.330 kg	0.335 kg
Conformity to standards			cUL 60950, cUL 508 and CSA 22.2 No. 142, UL 1604 and CSA 22.2 No. 213 Class 1 Division 2, CE, GL, C-Tick			
LED indicators			P1 and P2 power supplies, Ethernet link status, transmission activity			
Alarm relay			Activity, detected power supply fault, detected Ethernet network fault, or detected communication port fault (1 A max. volt-free contact at 24 V ⎓)			
Reference			**499 NMS 251 01**	**499 NMS 251 02**	**499 NSS 251 01**	**499 NSS 251 02**

(1) Length dependent on the attenuation analysis and attenuation of the fiber optic (typical value: 2,000 m).
(2) Length dependent on the attenuation analysis and attenuation of the fiber optic (typical value: 15,000 m).

Ethernet network

Cabling system

ConneXium™ managed switches

Specifications and references: 4 ports, twisted pair and fiber optic

Switches			Copper twisted pair and fiber optic, managed			
Interfaces	Copper cable ports	Number and type	3 x 10/100BASE-TX ports	2 x 10/100BASE-TX ports	3 x 10/100BASE-TX ports	2 x 10/100BASE-TX ports
		Shielded connectors	RJ45			
		Medium	Shielded twisted pair, category CAT 5E			
		Total length of pair	100 m			
	Fiber optic ports	Number and type	1 x 100BASE-FX port	2 x 100BASE-FX ports	1 x 100BASE-FX port	2 x 100BASE-FX ports
		Connectors	Duplex SC			
		Medium	Multi-mode optical fiber		Single mode optical fiber	
		Length of optical fiber				
		50/125 µm fiber	5,000 m *(1)*		–	
		62.2/125 µm fiber	4,000 m *(1)*		–	
		9/125 µm fiber	–		32,500 m *(2)*	
		Attenuation analysis				
		50/125 µm fiber	8 dB		–	
		62.2/125 µm fiber	11 dB		–	
		9/125 µm fiber	–		16 db	
	Ethernet services		FDR, SMTP V3, SNTP client, multicast filtering for optimization of the Global Data protocol, configuration via Web access VLAN, IGMP Snooping, RSTP *(Rapid Scanning Tree Protocol)*, priority port, data stream control, secure port			
Topology	Number of switches	Cascaded	Unlimited			
		Redundant in a ring	max. 50			
Redundancy			Redundant power supplies, redundant single ring, ring coupling			
Power supply	Voltage	Operation	9.6...60 V ⎓/18…30 V ∿, safety extra low voltage (SELV)			
	Power consumption		6.5 W	7.3 W	6.5 W	7.3 W
	Removable connector		6-way			
Operating temperature			0…+ 60 °C			
Relative humidity			10…90% non condensing			
Degree of protection			IP 20			
Dimensions		W x H x D	47 x 131 x 111 mm			
Mounting			On symmetrical DIN rail, 35 mm wide			
Weight			0.400 kg			
Conformity to standards			IEC/EN 61131-2, IEC 61850-3, UL 508, UL 1604 Class 1 Division 2, CSA 22.2 No. 214 (cUL), CSA 22.2 No. 213 Class 1 Division 2 (cUL), CE, GL, C-Tick			
LED indicators			Power supply status, alarm relay status, active redundancy, redundancy management, copper port status and copper port activity			
Alarm relay			Detected power supply fault, detected Ethernet network fault, detected communication port fault, detected redundancy fault (1 A max. volt-free contact at 24 V ⎓)			
Reference			**TCS ESM 043F1CU0**	**TCS ESM 043F2CU0**	**TCS ESM 043F1CS0**	**TCS ESM 043F2CS0**

(1) Length dependent on the attenuation analysis and attenuation of the fiber optic (typical value: 2,000 m).
(2) Length dependent on the attenuation analysis and attenuation of the fiber optic (typical value: 15,000 m).

Specifications and references: 4 and 8 ports, twisted pair

Switches			Copper twisted pair, managed	
Interfaces	Copper cable ports	Number and type	4 x 10/100BASE-TX ports	8 x 10/100BASE-TX ports
		Shielded connectors	RJ45	
		Medium	Shielded twisted pair, category CAT 5E	
		Total length of pair	100 m	
	Fiber optic ports	Number and type	–	
		Connectors	–	
		Medium		
		Length of optical fiber		
		50/125 µm fiber	–	
		62.2/125 µm fiber	–	
		9/125 µm fiber	–	
		Attenuation analysis		
		50/125 µm fiber	–	
		62.2/125 µm fiber	–	
		9/125 µm fiber	–	
	Ethernet services		FDR, SMTP V3, SNTP client, multicast filtering for optimization of the Global Data protocol, configuration via Web access VLAN, IGMP Snooping, RSTP *(Rapid Scanning Tree Protocol)*, priority port, data stream control, secure port	
Topology	Number of switches	Cascaded	Unlimited	
		Redundant in a ring	max. 50	
Redundancy			Redundant power supplies, redundant single ring, ring coupling	
Power supply	Voltage	Operation	9.6...60 V ⎓/18…30 V ∿, safety extra low voltage (SELV)	
	Power consumption		5.3 W	5.3 W
	Removable connector		6-way	
Operating temperature			0…+ 60 °C	
Relative humidity			10…90% non condensing	
Degree of protection			IP 20	
Dimensions		W x H x D	47 x 131 x 111 mm	74 x 131 x 111 mm
Mounting			On symmetrical DIN rail, 35 mm wide	
Weight			0.400 kg	0.410 kg
Conformity to standards			IEC/EN 61131-2, IEC 61850-3, UL 508, UL 1604 Class 1 Division 2, CSA 22.2 No. 214 (cUL), CSA 22.2 No. 213 Class 1 Division 2 (cUL), CE, GL, C-Tick	
LED indicators			Power supply status, alarm relay status, active redundancy, redundancy management, copper port status and copper port activity	Power supply status, alarm relay status, active redundancy, redundancy management, fiber port status and fiber port activity
Alarm relay			Detected power supply fault, detected Ethernet network fault, or detected communication port fault (1 A max. volt-free contact at 24 V ⎓)	
Reference			**TCS ESM 043F23F0**	**TCS ESM 083F23F0**

Ethernet network

Cabling system

ConneXium™ managed switches

Specifications and references: 8 ports, twisted pair and fiber optic

Switches			Copper twisted pair and fiber optic, managed			
Interfaces	Copper cable ports	Number and type	7 x 10/100BASE-TX ports	6 x 10/100BASE-TX ports	7 x 10/100BASE-TX ports	6 x 10/100BASE-T ports
		Shielded connectors	RJ45			
		Medium	Shielded twisted pair, category CAT 5E			
		Total length of pair	100 m			
	Fiber optic ports	Number and type	1 x 100BASE-FX port	2 x 100BASE-FX ports	1 x 100BASE-FX port	2x 100BASE-FX ports
		Connectors	Duplex SC			
		Medium	Multi-mode optical fiber		Single mode optical fiber	
		Length of optical fiber				
		50/125 µm fiber	5,000 m *(1)*		–	
		62.2/125 µm fiber	4,000 m *(1)*		–	
		9/125 µm fiber	–		32,500 m *(2)*	
		Attenuation analysis				
		50/125 µm fiber	8 dB		–	
		62.2/125 µm fiber	11 dB		–	
		9/125 µm fiber	–		16 dB	
	Ethernet services		FDR, SMTP V3, SNTP client, multicast filtering for optimization of the Global Data protocol, configuration via Web access VLAN, IGMP Snooping, RSTP *(Rapid Scanning Tree Protocol)*, priority port, data stream control, secure port			
Topology	Number of switches	Cascaded	Unlimited			
		Redundant in a ring	max. 50			
Redundancy			Redundant power supplies, redundant single ring, ring coupling			
Power supply	Voltage	Operation	9.6...60 V ⎓/18…30 V ∿, safety extra low voltage (SELV)			
	Power consumption		6.5 W	7.3 W	6.5 W	7.3 W
	Removable connector		6-way			
Operating temperature			0…+ 60 °C			
Relative humidity			10… 90% non condensing			
Degree of protection			IP 20			
Dimensions		W x H x D	74 x 131 x 111 mm			
Mounting			On symmetrical DIN rail, 35 mm wide			
Weight			0.410 kg			
Conformity to standards			IEC/EN 61131-2, IEC 61850-3, UL 508, UL 1604 Class 1 Division 2, CSA 22.2 No. 214 (cUL), CSA 22.2 No. 213 Class 1 Division 2 (cUL), CE, GL, C-Tick			
LED indicators			Power supply status, alarm relay status, active redundancy, redundancy management, fiber port status and fiber port activity			
Alarm relay			Detected power supply fault, detected Ethernet network fault, or detected communication port fault (1 A max. volt-free contact at 24 V ⎓)			
Reference			**TCS ESM 083F1CU0**	**TCS ESM 083F2CU0**	**TCS ESM 083F1CS0**	**TCS ESM 083F2CS0**

(1) Length dependent on the attenuation analysis and attenuation of the fiber optic (typical value: 2,000 m).
(2) Length dependent on the attenuation analysis and attenuation of the fiber optic (typical value: 15,000 m).

Specifications and references: 16 and 24 ports, twisted pair, fiber optic

Switches			Copper twisted pair, managed	Copper twisted pair and fiber optic, managed	
Interfaces	Copper cable ports	Number and type	16 x 10/100BASE-TX ports	14 x 10/100BASE-TX ports	22 x 10/100BASE-TX ports
		Shielded connectors	RJ45		
		Medium	Shielded twisted pair, category CAT 5E		
		Total length of pair	100 m		
	Fiber optic ports	Number and type	–	2 x 100BASE-FX ports	
		Connectors	–	Duplex SC	
		Medium	–	Multi-mode optical fiber	
		Length of optical fiber			
		50/125 µm fiber	–	5,000 m *(1)*	
		62.2/125 µm fiber	–	4,000 m *(1)*	
		9/125 µm fiber	–	–	
		Attenuation analysis			
		50/125 µm fiber	–	8 dB	
		62.2/125 µm fiber	–	11 dB	
		9/125 µm fiber	–	–	
	Ethernet services		FDR, SMTP V3, SNTP client, multicast filtering for optimization of the Global Data protocol, configuration via Web access VLAN, IGMP Snooping, RSTP *(Rapid Scanning Tree Protocol)*, priority port, data stream control, secure port		
Topology	Number of switches	Cascaded	Unlimited		
		Redundant in a ring	max. 50		
Redundancy			Redundant power supplies, redundant single ring, ring coupling		
Power supply	Voltage	Operation	9.6...60 V ⎓/18…30 V ∿, safety extra low voltage (SELV)		
	Power consumption		9.4 W	11.8 W	15.5 W
	Removable connector		6-way		
Operating temperature			0…+ 60 °C		
Relative humidity			10… 90% non condensing		
Degree of protection			IP 20		
Dimensions		W x H x D	111 x 131 x 111 mm		
Mounting			On symmetrical DIN rail, 35 mm wide		
Weight			0.600 kg		0.650 kg
Conformity to standards			cUL 60950, UL 508 and CSA 22.2 No 142, UL 1604 and CSA 22.2 No 213 Class 1 Division 2, CE, GL, C-Tick		
LED indicators			Redundant power supplies, single ring	Redundant power supplies, single ring, double ring	
Alarm relay			Detected power supply fault, detected Ethernet network fault, or detected communication port fault (1 A max. volt-free contact at 24 V ⎓)		
Reference			**TCS ESM 163F23F0**	**TCS ESM 163F2CU0**	**TCS ESM 243F2CU0**

(1) Length dependent on the attenuation analysis and attenuation of the fiber optic (typical value: 2,000 m).

Specifications and references: 8 ports and 2 Gigabit ports, twisted pair, fiber optic

Switches			Copper twisted pair and fiber optic, managed			Copper twisted pair, managed
Interfaces	Copper cable ports	Number and type	8 x 10/100BASE-TX ports			8 x 10/100BASE-TX ports and 2 x 10/100/1000BASE-TX ports (Gigabit)
		Shielded connectors	RJ45			
		Medium	Shielded twisted pair, category CAT 5E			
		Total length of pair	100 m			
	Gigabit ports fiber optic (with SFP fiber module to be mounted on SFP connector)	Number and type	2 x 1000BASE-SX ports *(1)*	2 x 1000BASE-LH ports (2)	2 x 1000BASE-LX ports *(3)*	–
		Connectors	LC			–
		Medium	Multi-mode optical fiber	Single mode optical fiber	Single mode and multimode optical fiber	–
		Length of optical fiber				
		50/125 µm fiber	550 m	–	550 m	–
		62.2/125 µm fiber	275 m	–	550 m	–
		9/125 µm fiber	–	8 -72,000 m	20,000 m	–
		Attenuation analysis				
		50/125 µm fiber	7.5 dB	–	11 dB	–
		62.2/125 µm fiber	7.5 dB	–	11 dB	–
		9/125 µm fiber	–	6 - 22 dB	11 dB	–
	Ethernet services		FDR, SMTP V3, SNTP client, multicast filtering for optimization of the Global Data protocol, configuration via Web access VLAN, IGMP Snooping, RSTP *(Rapid Scanning Tree Protocol)*, priority port, data stream control, secure port			
Topology	Number of switches	Cascaded	Unlimited			
		Redundant in a ring	max. 50			
Redundancy			Redundant power supplies, redundant single ring, ring coupling			
Power supply	Voltage	Operation	9.6...60 V ⎓/18…30 V ∿, safety extra low voltage (SELV)			
	Power consumption		8.9 W + 1 W per SFP fiber module			8.3 W
	Removable connector		6-way			
Operating temperature			0…+ 60 °C			
Relative humidity			10… 90% non condensing			
Degree of protection			IP 20			
Dimensions		W x H x D	111 x 131 x 111 mm			
Mounting			On symmetrical DIN rail, 35 mm wide			
Weight			0.410 kg			
Conformity to standards			cUL 60950, UL 508 and CSA 22.2 No. 142, UL 1604 and CSA 22.2 No. 213 Class 1 Division 2, CE, GL			
LED indicators			Power supply status, alarm relay status, active redundancy, redundancy management, fiber port status and fiber port activity			
Alarm relay			Detected power supply fault, detected Ethernet network fault, or detected communication port fault (1 A max. volt-free contact at 24 V ⎓)			
Reference			**TCS ESM 103F2LG0**			**TCS ESM 103F23G0**

(1) With **TCS EAA F1LFU00** *fiber optic module to be ordered separately, see page 79.*
(2) With **TCS EAA F1LFH00** *fiber optic module to be ordered separately, see page 79.*
(3) With **TCS EAA F1LFS00** *fiber optic module to be ordered separately, see page 79.*

Modicon™ Momentum™ automation platform

Concept™ programming software

Introduction

Concept™ software is a configuration and application programming tool for the Modicon™ Quantum™ and Modicon™ Momentum™ automation platforms. It is Windows™-based software that can be run on a standard PC. The configuration task can be carried out online (with the PC connected to the Quantum processor) or offline (PC only). Concept supports the configuration by recommending only permissible combinations. During online operation, the configured hardware is checked immediately for validity, and illegal statements are rejected.

Concept editors support five IEC programming languages:
- Function Block Diagram (FBD) language
- Ladder (LD)
- Sequential Function Chart (SFC) and Grafcet language
- Instruction List (IL)
- Structured Text (ST)

Also supported is ladder logic (LL984) that is compatible with Modsoft™. IEC 61131-3 compliant data types are also available. With the data type editor, custom data types can be converted to and from the IEC data types.

The basic elements of the FBD programming language are functions and function blocks that can be combined to create a logical unit. The same basic elements are used in the LD programming language; LD provides contact and coil elements. The Grafcet SFC programming language (SFC) uses basic step, transition, connection, branch, join and jump elements. The IL and ST text programming languages use instructions, expressions, and key words. The LL984 programming language uses an instruction set and contact and coil elements.

Programs can be written in logical segments. A segment can be a functional unit, such as conveyor belt control. Only one programming language is used within a given segment. You build the control program, which the automation device uses to control the process, by combining segments within one program. Within the program, IEC segments (written in FBD, LD, SFC, IL and ST) can be merged. The LL984 segments are always processed as a block by the IEC segments. Concept's sophisticated user interface uses windows and menus for easy navigation. Commands can be selected and executed quickly and easily using a mouse. Context-sensitive help is available at each editing step.

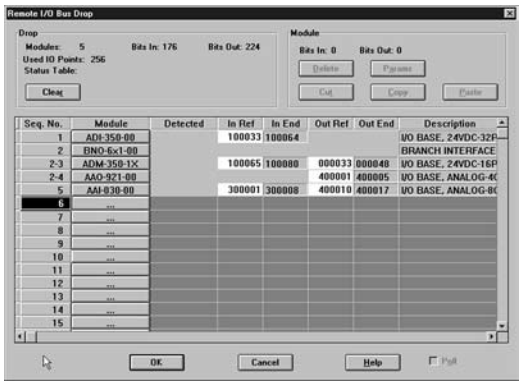

PLC configuration

Variables for linking basic objects within one section are not required by the graphic programming languages (FBD, LD, SFC and LL984).
These wiring diagrams are managed by the system, which minimizes any configuration effort. Other variables, such as variables for data transfers between different sections, are configured with the variables editor. With the data type editor, custom data types can be derived from existing data types.

Functions

Concept™ software provides an editor for each programming language. These editors contain custom menus and tool bars. You can select the editor to be used as you create each program segment.

In addition to the language editors, Concept provides a data type editor, a variables editor and a reference data editor.

Function Block Diagram (FBD) language

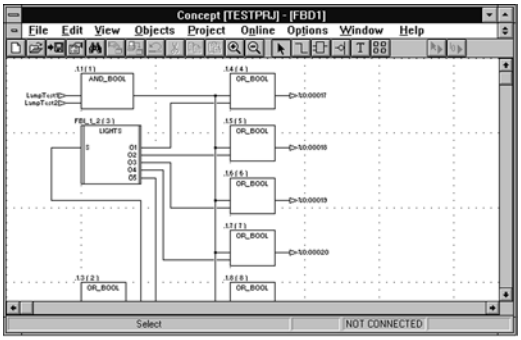

With the IEC 61131-3 function block diagram language, you can combine elementary functions, elementary function blocks (EFBs) and derived function blocks (known as FFBs) with variables in an FBD.
FFBs and variables can be commented. Text can be freely placed within the graphic. Many FFBs offer an option for input extensions.

Concept provides various block libraries with predefined EFBs for programming an FBD. EFBs are grouped in the libraries according to application types to facilitate the search.

In the FBD editor, you can display, modify and load initial values, and current values can be displayed. The CONT_CTL control library allows you to display animated diagrams of the FFBs and a graph of the current values.

For custom function blocks (DFBs), the Concept-DFB editor is used. In this editor, you can create your own function blocks from EFBs or existing DFBs. DFBs created in the FBD editor can be recalled in the LD, IL and ST editors, and DFBs created in the LD, IL and ST editors can be used in the FBD editor.

Ladder (LD)

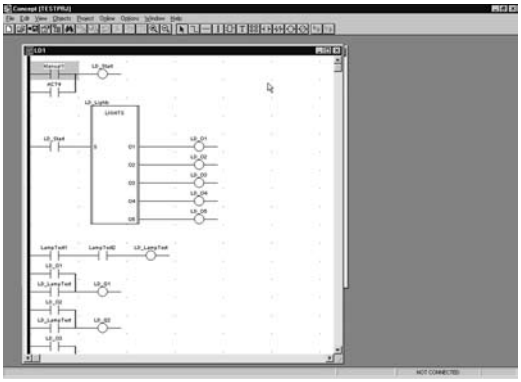

With the IEC 61131-3 ladder diagram language, you can build an LD program with elementary functions, function blocks and derived function blocks (known as FFBs), along with contacts, coils and variables. FFBs, contacts, coils and variables can be commented. Text can be freely placed within the graphic. Many FFBs offer an option for input extensions.

The structure of an LD segment corresponds to that of a current path for relay circuits. On its left side is a left bus bar, which corresponds to the phase (L conductor) of a current path. As with a current path, only the LD objects (contacts, coils) connected to a power supply (i.e., connected to the left bus bar) are processed in LD programming. The right bus bar, which corresponds to the neutral conductor, is not visible. However, coils and FFB outputs are internally connected it to create a current flow.
The same EFB block libraries available for the FBD editor can be used in the LD editor to program a ladder diagram.

In the FBD editor, you can display, modify and load initial values; current values can be displayed. The CONT_CTL control library, for example allows you to display animated diagrams of the FFBs, along with a graph of the current values.

For custom function blocks (DFBs), the Concept-DFB editor is used. In this editor, you can create your own function blocks from EFBs or existing DFBs. DFBs created in the LD editor can be recalled in the FBD, IL and ST editors, and DFBs created in the FDB, IL and ST editors can be used in the LD editor.

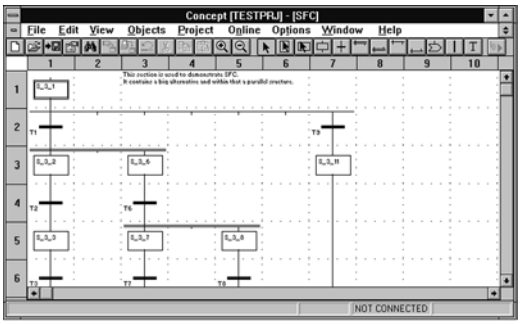

Functions

Sequential Function Chart (SFC) language

With the IEC 61131-3 sequential function chart (SFC) language, you can define a series of SFC objects that comprise a control sequence. Steps, transitions and jumps in the sequence can be commented. Text can be freely placed within the graphics. You can assign any number of actions to every step. A series of monitoring functions – e.g., maximum and minimum monitoring time – can be integrated into each step's specifications. The actions can be assigned an attribute symbol (as required by IEC) to control the action's performance after it has been activated – e.g., a variable can be set to remain active after exiting.

Instruction List (IL)

With the IEC 61131-3 IL language, you can call entire functions and function blocks conditionally or unconditionally, execute assignments and make conditional and unconditional jumps within a program segment.

IL is a text-based language, and standard Windows™ word processing tools can be used to generate code. The IL editor also provides several word processing commands. Keywords, separators and comments are spell-checked automatically as they are entered. Detected errors are highlighted in color.

For custom function blocks (DFBs), the Concept™-DFB editor is used. In this editor, you can create your own function blocks from EFBs or existing DFBs. DFBs created in the IL editor can be recalled in the ST, LD, and FBD, DFBs created in the ST, LD, and FBD editors can be recalled in the IL editor.

Structured Text (ST)

With the IEC 61131-3 ST language, you can call function blocks, execute functions and assignments and conditionally execute and repeat instructions. The ST programming environment is similar to Pascal. IL is a text-based language, and therefore standard Windows word processing tools can be used to generate code. The ST editor also provides several word processing commands. Keywords, separators and comments are spell-checked automatically as they are entered. Detected errors are highlighted in color.

Custom function blocks (DFBs) created with the ST editor can be called in the IL, LD and FBD editors; DFBs created in the IL, LD and FBD editors can be used in the ST editor.

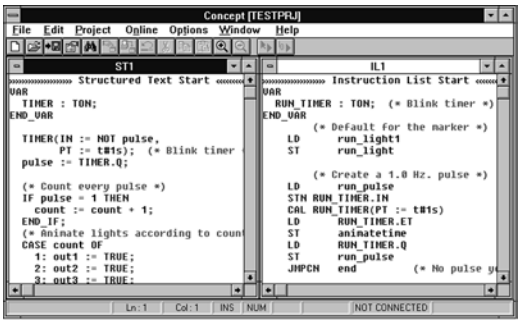

Functions

Data type editor

The data type editor defines new derived data types. Any elementary data types and derived data types already existing in a project can be used for defining new data types. With derived data types, various block parameters can be transferred as one set. Within the program, this set is divided again into single parameters, processed, then output as either a parameter set or individual parameters. Derived data types are defined in text format, and standard Windows™ word processing tools can be used. The data type editor also provides several word processing commands.

Variables editor

The variables editor contains input options for:

- Variable type (located variable, unlocated variable, constant)
- Symbolic name
- Data type
- Direct address (explicit, if desired)
- Comments
- Identification as human-machine interface (HMI) variable for data exchange

Animation tables editor

In online mode, the reference data editor displays, forces and controls variables. The editor contains the following options:

- Default values for the variable
- Status display for the variable
- Various format definitions
- Ability to isolate the variable from the process

Functions

Libraries

IEC library

The IEC library contains the EFBs defined in IEC 61131-3 (calculations, counters, timers, etc).

Extended library

The extended library contains useful supplements to various libraries. It provides EFBs for mean value creation, maximum value selection, negation, triggering, converting, building a traverse with interpolation of the first order, edge detection and determination of the neutral range for process variables.

System library

The system library contains EFBs in support of system functions. It provides EFBs for cycle time detection, utilization of various system clocks, control of SFC sections and system status display.

CLC and CLC_PRO library

The Continuous Control library can be used to set up process-specific control loops. In particular, it offers controller, derivative and integral control functions. The CLC_PRO library contains the same EFBs as the CLC library along with data structures.

Communication library

The communication libraries of built-in function blocks provide easy integration of programs that allow communication between PLCs or HMI devices from within the PLC's application program. Like other function blocks, these EFBs can be used in any language to share data, or provide data to the HMI device for display to the operator.

Diagnostics library

The diagnostics library is used for troubleshooting the control program. It contains EFBs for action, reaction,interlocking, and process prerequisite diagnostics, along with signal monitoring.

LIB984 library

The LIB984 library provides common function blocks used in both the 984 ladder logic editor and the IEC languages. This allows for easy transition of portions of application code from the LL984 environment to the IEC environment.

Fuzzy logic library

The fuzzy library contains EFBs for fuzzy logic.

Analog I/O library

The ANA_IO library is used to process analog values.

Modicon™ Momentum™ automation platform

Concept™ programming software

References

Concept™ packages

Description	License type	Reference	Weight kg
Concept S Version 2.6	Single (1 station)	**372 SPU 471 01 V26**	–
Concept M Version 2.6	Single (1 station)	**372 SPU 472 01 V26**	–
Concept XL Version 2.6	Single (1 station)	**372 SPU 474 01 V26**	–
	Group (3 stations)	**372 SPU 474 11 V26**	–
	Team (10 stations)	**372 SPU 474 21 V26**	–
	Site (network)	**372 SPU 474 31 V26**	–
Concept EFB Toolkit Version 2.6	Single (1 station)	**332 SPU 470 01 V26**	–
HVAC Function Blocks Library	Site (network)	**372 HVA 160 30V25**	–

Concept maintenance and diagnostics packages

Description	License type	Reference	Weight kg
Concept Application Loader Version 2.6	Single (1 station)	**372 SPU 477 01 V26**	–

Concept Updates

Description	License type	Reference	Weight kg
Concept XL Version ●.● to Concept XL V 2.6	Single (1 station)	**372 ESS 474 01**	–
	Group (3 stations)	**372 ESS 474 03**	–
	Team (10 stations)	**372 ESS 474 10**	–
	Site (network)	**372 ESS 474 00**	–
Concept S Version ●.● to Concept S V 2.6	Single (1 station)	**372 ESS 471 01**	–
Concept M Version ●.● to Concept M V 2.6	Single (1 station)	**372 ESS 472 01**	–
Modsoft™ version ●.● to Concept XL V 2.6	Depends on number of users	**372 ESS 485 01**	–
Concept EFB Toolkit version ●.● to version 2.6	–	**372 ESS 470 01**	–

Concept Documentation

Description	Number of volumes	Reference *(1)*	Weight kg
Installation	1	**840 USE 492 0●**	–
Programming	3	**840 USE 493 0●**	–
Concept IEC Block library	13	**840 USE 494 0●**	–
Concept 984 LL Block Library	2	**840 USE 496 0●**	–
Concept EFB Tool User Manual	1	**840 USE 495 01**	–

*(1) ● = Defines the documentation language: **0** English, **1** French, **2** German, and **3** Spanish.*

Modicon™ Momentum™ automation platform

ProWORX™ 32 programming software

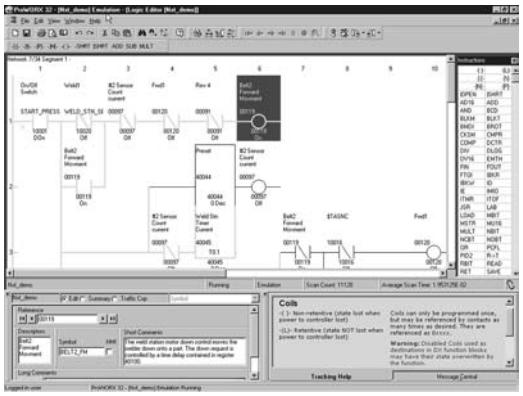

Introduction

ProWORX™ 32 LL984 programming software is a full-featured, Modicon™ Quantum™ and Modicon™ Momentum™ M1/M1E PLC programming software that is compatible with Windows platforms (98/NT/2000/XP). ProWORX 32 gives you the power to program your Modicon controllers online or offline, manage your I/O subsystems, and analyze your plant's activity in real time.

ProWORX 32 offers client-server functions for organizing groups and user rights, centralizing project backup, and serving as a bridge between design department and workshop. The project emulator makes it possible to test projects before executing them in a PLC operating environment, to help ensure optimal system effectiveness at all times.

Some of the new ProWORX 32 features include:

- **32-bit processing**. With 32-bit processing, ProWORX 32 is an even more powerful solution than its predecessors, ProWORX Plus and ProWORX NxT. 32-bit processing lets you utilize the power of state-of-the-art operating systems for optimal development and operational performance.
- **A comprehensive suite of tools**. ProWORX 32 provides everything you will need to start, configure, test and complete your project, quickly, reliably and professionally. And with its improved suite of standard utilities, ProWORX 32 is a virtual "one stop shop" for your Automation requirements. No more searching on the web for special features or functions, they're included to save you time and increase your productivity.
- **A high-performance offer**. In addition, ProWORX 32 will simplify and speed up your system development and commissioning time with powerful diagnostics, easier integration, and greater openness and flexibility.
- **Easier integration**. Using standard Microsoft components, ProWORX 32 opens up a wealth of user data. Import and export capabilities have been enhanced to provide a variety of integration options for HMI and third party devices, such as a built in "Alliance Tool" that allows users to create hardware profiles for newly developed devices. The profiles can even be sent electronically to Schneider Electric for inclusion in future ProWORX 32 releases.

Windows™ environment

The familiar Windows-based programming environment means you spend less time learning how to do things, and more time being productive. ProWORX uses familiar Windows features like user-defined screens, drag-and-drop, cut and paste, search, and global replace.

Conversion

484™ PLC code to 984™ PLC code in one step! The most flexible conversion tools available in the automation industry. That is the reputation ProWORX products have always enjoyed, and ProWORX 32 is no exception. With the ability to convert from older project databases to this latest tool, ProWORX 32 supports almost 30 years of PLC heritage.

Multiple projects

Imagine the time and effort you could save by testing a new project with an existing project while it is running live. Now you can with the Multiple Projects function of ProWORX 32, even with two PLCs running simultaneously! Perform diagnostic checks to validate interdependencies between your emulated project and your live applications, in real time, so you can go live with total confidence.

Intuitive register editor

A powerful analysis tool, the Data Watch Window shows you information from your plant in real time, or logs it to disk for in-depth historical analysis later on. Easily get the data you need to make informed, effective production decisions. View and edit data in full page display, see trends and track data points against time in a spreadsheet, and monitor any combinations of discrete and analog data.

References:
page 99

Introduction

I/O drawing generator

Save hours of painstaking effort with ProWORX™ 32's I/O Drawing Generator, that automatically creates wiring diagrams for the I/O cards defined in the Traffic Cop. Generate necessary drawings all at once, or just one card at a time. Simply select an address the I/O card uses with the Network Editor, then click the drawing button on the Hardware Back Referencing panel to display the diagram. If desired, save it as an AUTOCAD-compatible .DXF file or print it.

Network editor

With the Network Editor, ProWORX 32 reduces development time by using the same commands and instructions for every controller. Simply cut, copy, and paste networks from one platform to any other.

Program documentation

ProWORX is first-class software with high-quality program documentation. Use one of the many standard templates to get started, and progress to assemble your own custom documentation. For better references and easier-to-use documentation, we have provided annotation down to the "Bit" level to allow longer comments and more lines of text. Even simple things like using Windows O/S fonts to help eliminate printer issues demonstrates that every detail has been considered.

Realtime network status

Find the controller you need quickly and simplify network diagnostics with ProWORX 32's powerful Network Scan feature. Network Scan searches your Modbus or Modbus Plus networks, then identifies and graphically displays each device found – and shows its status.

Advanced I/O management

Ensure that the I/O card you are configuring in the software matches the one on your plant floor with ProWORX 32's graphical Traffic Cop. It displays I/O cards on your screen the same way they look in real life, which helps eliminate confusion. To place a card, just select it from the convenient drop down menu and then drag it into the controller slot you want. To save even more time, the Traffic Cop automatically associates the card's I/O points with a block of free addresses in your controller. Once configured, manage your I/O with Pro WORX 32's complete documentation tools, with references for each head, drop, rack, slot and address. And, the Traffic Cop's graphical display shows you at-a-glance that your I/O is healthy.

References:
page 99

Introduction

Client/Server Tools

ProWORX™ 32 allows projects to be developed in a collaborative environment without sacrificing control and security – by utilizing the ProWORX 32 server as the central repository for projects, the center for security, and the hub for communications. The system administrator has total control over user accounts, user groups, passwords, rights, and auditing policies and can grant access when and where needed.

The client/server relationship allows projects to be skillfully managed and controlled. The server can be used to keep “Master” versions of PLC projects for editing (subject to rights), while editing is achieved using the client. This can be done via a stand alone PC or even on the server, since both client and server can reside on the same PC.

The server has the capability to schedule software backups of the controller, detect software modifications, and store multiple versions. Even more powerful is the ability to communicate from the client to the server using either Ethernet TCP/IP or Modbus Plus™.

Project Emulator

The project emulator is a very powerful tool that will help save considerable time in the design and testing of your system. It provides the ability to test projects prior to running them in the PLC run-time environment to help ensure your system will run at peak efficiency immediately upon commissioning. Two emulators are provided that test interdependent projects. They are used to test communications, including: I/O polling and monitoring network activities between projects.

Material List Generation

Want a shopping list for your PLC equipment? The Material List Generation function automatically creates a list for the project, either online or offline, even taking into account the contents of the Traffic Cop. Add prices and comments once the list is generated, saving you time and insuring that required components are fully documented and identified.

Modicon™ Momentum™ automation platform

ProWORX™ 32 programming software

ProWORX32

ProWORX™ Client/Server software

ProWORX packages

Description	Used with	License type	Reference	Weight kg
ProWORX 32	Server	Single-station	**372 SPU 780 01 PSEV**	–
	Client/Server Suite	Single-station	**372 SPU 780 01 PSSV**	–
	Client, design/operation	Single-station	**372 SPU 780 01 PDEV**	–
		Group (3 stations)	**372 SPU 780 01 PSTH**	–
		Team (10 stations)	**372 SPU 780 01 PSTE**	–
		Site	**372 SPU 780 01 SITE**	–
	Run Time client	Single-station	**372 SPU 781 01 PONL**	–
ProWORX 32 Lite	Client, design/operation	Single-station	**372 SPU 710 01 PLDV**	–
		Group (3 stations)	**372 SPU 710 01 PLTH**	–
		Team (10 stations)	**372 SPU 710 01 PLTE**	–
ProWORX 32 Upgrades	Client	Single-station	**372 SPU 784 01 LPUP**	–
		Additional multi-use	**372 SPU 784 01 SEAT**	–
		Group (3 stations)	**372 SPU 784 01 LPTH**	–
		Team (10 stations)	**372 SPU 784 01 LPTE**	–

Documentation

Description	Language	Reference	Weight kg
ProWORX 32 programming manuals	English	**372 SPU 780 01 EMAN**	–
	French	**372 SPU 780 01 FMAN**	–
	German	**372 SPU 780 01 DMAN**	–
	Spanish	**372 SPU 780 01 SMAN**	–

Modicon™ Momentum™ automation platform

Aggressive environments protection

Optional conformal coating

Introduction

If your control system needs to operate in a corrosive environment, selected Modicon™ Momentum™ modules can be ordered with a conformal coating applied to components of the product. Conformal coating will extend the component's life and enhance its environmental performance capabilities.

Mixed flowing gas (power on)

Standard	Pollutant	Parts/billion	Modicon Momentum's performance
EIA 364-65 level III	Cl_2	20 (±5)	Meets the standard
	NO_2	200 (±50)	Exceeds standard (1250 parts/billion)
	H_2S	100 (±20)	Meets standard
ISA-S71.04 GX severe	Cl_2	10	Exceeds standard (20 parts/billion)
	NO_2	1250	Meets standard
	H_2S	50	Exceeds standard (100 parts/billion)
	SO_2	300	Meets standard

Humidity (operating)

Standard	Concentration (%)	Modicon Momentum's performance
IEC-68-2-3	93 @ 60 °C (140 °F)	Meets standard

Salt mist (non-operating)

Standard	Concentration (%)	Modicon Momentum's performance
IEC 68-2-11	5 (±1)	Exceeds standard (5.7%)

Fungus resistance

Standard		Modicon Momentum's performance
MIL-I-46058C		**Designed to meet standard**

Temperature cycling (operating)

Standard	Cycles	Modicon Momentum's performance
IEC 68-2-14	100 @ 0…60 °C (32…140 °F)	Meets standard

Dust (non-operating)

Standard	Pollutant	Weight (%)	Modicon Momentum's performance
EIA 364-TP91 (pending)	Silica	36	Meets standard
	Calcite	29	Meets standard
	Iron oxide	12	Meets standard
	Alumina	8	Meets standard
	Gypsum	5	Meets standard
	Paper fiber	3	Meets standard
	Cotton fiber	3	Meets standard
	Polyester fiber	2	Meets standard
	Carbon black	1	Meets standard
	Human hair	0.5	Meets standard
	Cigarette ash	0.5	Meets standard

Modicon™ Momentum™ automation platform

Aggressive environments protection

Optional conformal coating

References

The following is a list of Modicon™ Momentum™ products that are available with optional conformal coating.

Note: *Please note that a "C" is appended to the standard reference for those Modicon Momentum products.*

170 ADI 3●0 00C

Discrete I/O bases

Type of current	Input voltage	Modularity (no. of points)	Conformity EC 1131-2	Reference	Weight kg
Discrete input bases	24 Vdc	16 (1 x 16)	Type 1	**170 ADI 340 00C**	0.190
		32 (2 x 16)	Type 1	**170 ADI 350 00C**	0.200

Type of current	Output voltage	Modularity (no. of points)	Current per output	Reference	Weight kg
Discrete output bases solid state, protected	24 Vdc	16 (2 x 8)	0.5 A	**170 ADO 340 00C**	0.210
		32 (2 x 16)	0.5 A	**170 ADO 350 00C**	0.210

Type of current	Input voltage	Output voltage	Modularity Input	Outputs, current	Reference	Weight kg
Discrete I/O bases	24 Vdc Type 1	24 Vdc protected solid state	16 I (1 x 16)	16 O (2 x 8) 0.5 A	**170 ADM 350 10C**	0.200
			16 I (4 x 4)	8 O (2 x 4) 2 A	**170 ADM 370 10C**	0.220
	24 Vdc Type 1	24/230 Vac 20/115 Vdc relay	10 I (1 x 10)	8 O (2 x 4) 2 A	**170 ADM 390 30C** *(1)* **170 ADM 390 31C** *(2)*	0.260

170 AAI ●●0 ●0C

Analog I/O bases

Type	Number of channels	Ranges	Reference	Weight kg
Analog inputs 2 bits + sign	16 single-ended	± 5 V, ± 10 V, 4-20 mA	**170 AAI 140 00C**	0.215
Analog onputs 15 bits + sign	4, differential	Pt 100, Pt 1000, NI 100 thermocouples B, E, J, K, N, R, S, T	**170 AAI 520 40C**	0.215
	8, differential	± 5 V, ± 10 V, 1-5 V± 20 mA, 4-20 mA	**170 AAI 030 00C**	0.215
Analog outputs12 bits + sign	4	± 10 V, 4-20 mA	**170 AAO 921 00C**	0.215

Type of discrete and analog I/O bases				Reference	Weight kg
Inputs		**Outputs**			
4 differential analog inputs 13 bits + sign	± 5 V, ± 10 V, 1-5 V ± 20 mA, 4-20 mA	2 analog ouputs 12 bits	0-20 mA ± 10 V	**170 AMM 090 00C**	0.240
4 discrete inputs	24 Vdc	2 discrete inputs	24 Vdc-0,5 A		

170 ENT 110 02C

Communication adapters

Description	Specifications	Reference	Weight kg
Ethernet TCP/IP network	10 Mbit/s	**170 ENT 110 02C**	0.070
Modbus Plus™ network	IEC format, non-redundant	**170 PNT 110 01C**	0.070
	984 format, non-redundant	**170 NEF 110 21C**	0.070
FIPIO™ bus	Bus manager Premium	**170 FNT 110 20C**	0.070
InterBus™	Generation 3 (SUPI 2)	**170 INT 110 00C**	0.070
	Generation 4 (SUPI 3, version 2)	**170 INT 110 03C**	0.070
Profibus DP™	9,6 kbit/s...12 Mbit/s	**170 DNT 110 00C**	0.070

171 CCC ●●0 ●0

M1/M1E processor adapters

Memories	Comm Port(s)	Clock Speed	Reference	Weight kg
256 Ko RAM, 256 Ko Flash	1 Modbus, 1 I/O Bus	32 MHz	**171 CCS 760 00C**	0.042
512 Ko RAM, 256 Ko Flash	1 Modbus, 1 I/O Bus	32 MHz	**171 CCC 760 10C**	0.042
544 Ko RAM, 512 Ko Flash	1 Ethernet, 1 I/O Bus	50 MHz	**171 CCC 960 20C**	0.042
544 Ko RAM, 1 Mo Flash, IEC Exec	1 Ethernet, 1 I/O Bus	50 MHz	**171 CCC 960 30C**	0.042

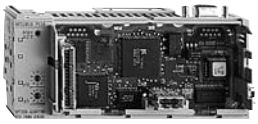

172 PNN 210 22C

Option adapters

Memories		Reference	Weight kg
Modbus Plus network	Single port, Time-of-Day *(TOD)* and battery backup	**172 PNN 210 22C**	0.070
Modbus link	2 x RS 232/RS 485 ports, Time-of-Day *(TOD)* and battery backup	**172 JNN 210 32C**	0.070

(1) Operating voltage 24 Vdc.

(2) Output voltage 24 Vdc.

Modicon™ Momentum™ automation platform

Enhanced grounding system

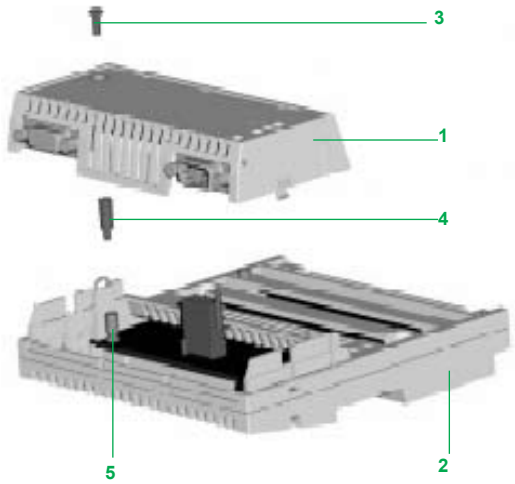

1 Communication adapter cover
2 I/O base
3 Standard screw M3-6
4 Male-female standoff
5 Added standoff

Modicon™ Momentum™ communication adapter ground screw

Due to new InterBus™ standards for electrical noise immunity, a number of Modicon™ Momentum™ products have been updated to include the enhanced grounding system, that is required to meet the revised electrical noise immunity standard (ability to pass a 2.2 kVDC electrical fast transient burst test).

This grounding system includes a ground screw located in the communication or M1/M1E processor adapter, that is connected to a fixed standoff-ground nut on the printed circuit board, and to a standoff on selected Modicon Momentum I/O bases.

Note: *This electrical noise immunity requirement applys only to systems that requires InterBus certification, version 2, and not to any other communication network that Modicon Momentum I/O currently uses. The standard electrical fast transient test for Modicon Momentum is 500 Vdc.*

The following is a list of the Modicon Momentum modules that currently have been updated to include the new grounding system:
- Communication adapters
- M1/M1E processor adapters and option adapters
- Discrete and analog I/O bases

References

Range	Description	Reference	See page
Communication adapters	Ethernet TCP/IP 10/100 Mbits/s (V2)	**170 ENT 110 01**	49
	Ethernet TCP/IP 10 Mbits/s (V1)	**170 ENT 110 02**	49
	InterBus™ SUPI 3 (V2)	**170 INT 110 03**	57
	FIPIO™ bus (for Premium) (V2)	**170 FNT 110 01**	55
M1/M1E processor adapters	64 K, 1 Modbus™, 20 MHz	**171 CCS 700 00**	68
	64 K, 1 Modbus, 32 MHz	**171 CCS 700 10**	68
	64 K, 2 Modbus, 20 MHz	**171 CCS 780 00**	68
	256 K, 1 Modbus, 1 I/O bus, 32 MHz	**171 CCS 760 00**	68
	512 K, 1 Modbus, 1 I/O bus, 32 MHz	**171 CCC 760 10**	68
	512 K, 2 Modbus, 32 MHz	**171 CCC 780 10**	68
	544 K, 1 Modbus, 1 Ethernet, 50 MHz	**171 CCC 980 20**	68
	544 K, 1 Ethernet, 1 I/O bus, 50 MHz	**171 CCC 960 20**	68
	544 K, IEC Exec, 1 Modbus, 1 Ethernet, 50 MHz	**171 CCC 980 30**	68
	544 K, IEC Exec, 1 Ethernet, 1 I/O bus, 50 MHz	**171 CCC 960 30**	68
Option adapters	Modbus Plus™, single port	**172 PNN 210 22**	75
	Modbus Plus, dual redundant ports	**172 PNN 260 22**	75
	RS 232/RS 485 serial port	**172 JNN 210 32**	75
Discrete input bases	24 Vdc 16 inputs	**170 ADI 340 00**	19
	24 Vdc 32 inputs	**170 ADI 350 00**	19
Discrete output bases	24 Vdc 16 solid state outputs 0.5 A	**170 ADO 340 00**	19
	24 Vdc 32 solid state outputs0.5 A	**170 ADO 350 00**	19
	DC/AC 6 relay form “C” outputs 5 A	**170 ADO 830 30**	19
Discrete I/O bases	24 Vdc 16 inputs/16 outputs 0.5 A	**170 ADM 350 10**	19
	24 Vdc 16 fast inputs/16 outputs 0.5 A	**170 ADM 350 11**	19
	24 Vdc 16 inputs/16 outputs 0.5 A	**170 ADM 350 15**	19
	24 Vdc 16 inputs wiring check/12 outputs 0.5 A	**170 ADM 390 10**	19
	24 Vdc 16 inputs/8 outputs 2 A	**170 ADM 370 10**	19
	12...60 Vdc 16 inputs/16 ouputs 0.5 A	**170 ADM 850 10**	19
	24 Vdc 10 inputs/AC or DC/8 relay 2A	**170 ADM 390 30**	19
		170 ADM 390 31	19
		170 ARM 370 30	19
Analog input bases	16 single-ended inputs 12 bits + sign	**170 AAI 140 00**	34
	8 differential inputs 15 bits + sign	**170 AAI 030 00**	34
Discrete and analog I/O bases	4 differential analog inputs/2 analog outputs 4 discrete inputs/2 discrete outputs	**170 AMM 090 00**	34
		170 AMM 090 01	34
	6 analog inputs/4 analog outputs 8 discrete inputs/8 discrete outputs	**170 ANR 120 90**	34
		170 ANR 120 91	34
Specialty I/O bases	High-speed counter base, 2 independant counters 200 kHz max.	**170 AEC 920 00**	42
	I/O base with Modbus RS 485 communication port and 120 Vac 6 inputs/3 outputs 0,5 A	**170 ADM 540 80**	42

Modicon™ Momentum™ automation platform

User documentation

References

Description	Language	Reference	Weight kg
Modicon™ Momentum™ I/O bases user guide	English	**870 USE 002 00**	–
	French	**870 USE 002 01**	–
	German	**870 USE 002 02**	–
	Spanish	**870 USE 002 03**	–
High-Speed counter base (170 AEC 920 00) user guide	English	**870 USE 008 00**	–
	French	**870 USE 008 01**	–
	German	**870 USE 008 02**	–
M1/M1E processor adapters and option adapter user guide	English	**870 USE 101 10**	–
	French	**870 USE 101 11**	–
	German	**870 USE 101 12**	–
	Spanish	**870 USE 101 13**	–
InterBus™ communication adapters user guide	English	**870 USE 010 00**	–
	French	**870 USE 010 01**	–
	German	**870 USE 010 02**	–
	Spanish	**870 USE 010 03**	–
InterBus communication adapter user guide	English	**870 USE 003 00**	–
	French	**870 USE 003 01**	–
Profibus DP™ communication adapter user guide (includes the GSD configuration software on 3.5" disk)	English	**870 USE 004 00**	–
	French	**870 USE 004 01**	–
	German	**870 USE 004 02**	–
Modbus Plus™ communication adapter, 170 PNT Series user guide	English	**870 USE 103 00**	–
	French	**870 USE 103 01**	–
	German	**870 USE 103 02**	–
Modbus Plus communication adapter, 170 NEF Series user guide	English	**870 USE 111 00**	–
FIPIO™ communication adapter (170 FNT 110 00) user guide	English	**870 USE 005 00**	–
	French	**870 USE 005 01**	–
	German	**870 USE 005 02**	–
	Spanish	**870 USE 005 03**	–
FIPIO communication adapter (170 FNT 110 01) user guide	English	**870 USE 105 00**	–
	French	**870 USE 105 01**	–
	German	**870 USE 105 02**	–
	Spanish	**870 USE 105 03**	–
FIPIO Bus / FIPway™ network reference manual	English	**TSX DR FIP E**	–
	French	**TSX DR FIP F**	–
	German	**TSX DR FIP G**	–
	Spanish	**TSX DR FIP S**	–
Modbus Plus network planning and installation guide	English	**890 USE 100 00**	–
	French	**890 USE 100 01**	–
	German	**890 USE 100 02**	–
	Spanish	**890 USE 100 03**	–
Modbus Plus network BM85 bridge multiplexer user guide	English	**890 USE 103 00**	–
Ethernet TCP/IP network 10BASE-T and 100BASE-TX	English	**490 USE 133 00**	–
	French	**490 USE 133 01**	–
	German	**490 USE 133 02**	–
	Spanish	**490 USE 133 03**	–
Modbus/TCP/IP Ethernet communication adapter user guide	English	**870 USE 114 00**	–
	French	**870 USE 114 01**	–
	German	**870 USE 114 02**	–
	Spanish	**870 USE 114 03**	–
XMIT Function Block version 3.0 user guide	English	**840 USE 113 00**	–

Technical information

Automation products certifications

In some countries, certification of certain electrical components is enforced by law. A standard conformity certificate is then issued by the official organization. Each certified product must carry approval symbols when enforced. Use on board merchant navy vessels generally requires prior approval (= certification) of an electrical device by certain marine classification authorities.

Key	Certification body	Country
CSA	Canadian Standards Association	Canada
C-Tick	Australian Communication Authority	Australia
GOST	Gost Standard Scientific Research Institute	C.I.S., Russia
UL	Underwriters Laboratories	USA
Key	**Classification authority**	**Country**
IACS	International Association of Classification Societies	International
ABS	American Bureau of Shipping	USA
BV	Bureau Veritas	France
DNV	Det Norske Veritas	Norway
GL	Germanischer Lloyd	Germany
LR	Lloyd's Register	United Kingdom
RINA	Registro Italiano Navale	Italy
RMRS	Russian Maritime Register of Shipping	C.I.S.

The table below shows the situation as of 01/03/2008 for certifications obtained or pending from organizations for base PLCs. An overview of certificates for Schneider Electric products is available on our web site: www.schneider-electric.us

Product certifications

	Approvals						
Certified / *Pending certification*	**UL**	**CSA**	C-Tick **ACA**	**GOST**	**Hazardous locations** Class I, Div 2 *(1)*	**ATEX**	**TÜV Rheinland**
	USA	Canada	Australia	CIS, Russia	USA, Canada	Europe	
Modicon™ OTB							
Modicon™ STB					FM	Cat 3 G	
Modicon™ Telefast™ ABE 7							
ConneXium™					*(2)*		
Magelis *i*PC™, Magelis™ XBT GTW	*(3)*				UL		
Magelis™ XBT GT					CSA/UL	Cat 3 G-D	
Magelis™ XBT GK							
Magelis™ XBT F/FC/HM/PM							
Magelis™ XBT N/R					CSA/UL	Cat 3 G-D	
Magelis™ XBT RT					CSA/UL		
Modicon™ M340™					CSA		
Modicon™ Momentum™							
Modicon™ Premium™				*(2)*	CSA		
Modicon™ Quantum™				*(2)*	FM *(2)*		
Modicon™ Quantum™ Safety				*(2)*	CSA		SIL3 *(4)*
Modicon™ TSX Micro™							
Phaseo™	*(3) (5)*						
Twido™	*(6)*	*(6)*			CSA/UL *(6)*		

(1) Hazardous locations: UL 1604, CSA 22.2 no. 213 or FM 3611, certified products are acceptable for use in hazardous locations of Class I, division 2, groups A, B, C, D or unclassified only.

(2) Depending on product, consult our web site: www.schneider-electric.us

(3) cULus North American certification (Canada and USA).

(4) Certified for use in applications up to and including SIL3 according to IEC 61508.

(5) Except Universal power supplies and Function modules: UL certification pending.

(6) Except **TWD NOI 10M3** *AS-Interface module, only CE.*

Local certifications		
BG	Germany	**TSX DPZ 10D2A** safety module (Modicon™ TSX Micro™ PLC). **TSX PAY 262/282** safety modules (Modicon Premium™ PLC).
SIMTARS	Australia	Modicon TSX Micro automation platform Modicon Premium automation platform (PL7)
AS-Interface	Europe	**TWD NOI 10M3** master module (Twido™ PLC). **TSX SAZ 10** master module (Modicon TSX Micro). **TSX SAY 1000** master modules (Modicon Premium).

Technical information

Automation products certifications
Community regulations

Marine classification

Marine classification authorities

Certified
Pending certification

	ABS USA	BV France	DNV Norway	GL Germany	LR UK	RINA Italy	RMRS C.I.S.
Modicon™ OTB							
Modicon™ STB	*(1)*						
Modicon™ Telefast™ ABE 7							
ConneXium™				*(2)*			
Magelis *i*PC™							
Magelis *i*PC™, Magelis™ XBT GTW	*(2)*	*(2)*	*(2)*	*(2)*	*(2)*	*(2)*	
Magelis™ XBT GK							
Magelis™ XBT F/FC/HM/PM							
Magelis™ XBT N/R		*(2)*	*(2)*	*(2)*		*(2)*	
Magelis™ XBT RT							
Modicon™ M340							
Modicon™ Momentum™							
Modicon™ Premium™ *(3)*	*(2)*	*(2)*	*(2)*	*(2)*	*(2)*	*(2)*	*(2)*
Modicon™ Quantum™				*(2)*		*(2)*	
Modicon™ TSX Micro™							
Phaseo™							
Twido™			*(4)*	*(4)*	*(4)*		

(1) Also meets US Navy requirements, **ABS-NRV** *part 4.*
(2) Depending on product, consult our web site: **www.schneider-electric.us**.
(3) Modicon™ Premium™ PLC, also **KRS** *(Korean register of Shipping) certified.*
(4) Exceptions: compact bases **TWD LC●● 40DRF**, *Extreme base* **TWD LEDCK1**, *I/O module* **TWD DAI 8DT**, *analog I/O modules* **TWD AMI 2LT/4LT/8HT**, **TWD ARI 8HT**, **TWD AVO 2HT**, **TWD AMM 6HT**, *communication modules* **499 TWD 01100**, **TWD NCO1M**, **TWD NOI 10M3** *and taps* **TWD XCA ISO/T3RJ**.

Community regulations

European directives

The opening of European markets implies a harmonization of regulations in the various European Union member states.
European Directives are documents used to remove obstacles to the free movement of goods and their application is compulsory in the European Union.
Member states are obliged to transcribe each Directive into their national legislation and, at the same time, to withdraw any conflicting regulations.
The Directives, particularly those of a technical nature, only set objectives, called “general requirements”.
The manufacturer must take necessary measures to help ensure that his products conform to the requirements of each Directive relating to his equipment.
As a general rule, the manufacturer affirms that his product conforms to the necessary requirements of the Directive(s) by applying the CE label to his product.
The CE marking is applied to Schneider-electric products where relevant.

The significance of CE marking

- The CE marking on a product means that the manufacturer certifies that this product conforms to the relevant European Directives. It is necessary so that a product subject to a Directive(s) can be marketed and freely moved within the European Union.
- The CE marking is intended solely for the national authorities responsible for market regulation.

For electrical equipment, conformity of the product to standards indicates that it is suitable for use.

One or more Directives, as appropriate, may apply to our products, in particular:
- The Low Voltage Directive 2006/95/EC
- The Electromagnetic Compatibility Directive 89/336/EEC, amended by Directives 2004/108/EC
- Directive CE ATEX 94/9/EC

0	
043 509 383	53, 75
1	
110 XCA 203 00	69, 75
110 XCA 204 00	69, 75
110 XCA 282 01	69, 75
110 XCA 282 02	69, 75
110 XCA 282 03	69, 75
170 AAI 030 00	34, 102
170 AAI 030 00C	101
170 AAI 140 00	34, 102
170 AAI 140 00C	101
170 AAI 520 40	34
170 AAI 520 40C	101
170 AAO 120 00	34
170 AAO 921 00	34
170 AAO 921 00C	101
170 ADI 340 00	19, 102
170 ADI 340 00C	101
170 ADI 350 00	19, 102
170 ADI 350 00C	101
170 ADI 540 50	19
170 ADI 740 50	19
170 ADM 350 10	19, 102
170 ADM 350 10C	101
170 ADM 350 11	19, 102
170 ADM 350 15	19, 102
170 ADM 370 10	19, 102
170 ADM 370 10C	101
170 ADM 390 10	19, 102
170 ADM 390 30	19, 102
170 ADM 390 30C	101
170 ADM 390 31	102
170 ADM 390 31C	101
170 ADM 540 80	42, 102
170 ADM 690 51	19
170 ADM 850 10	19, 102
170 ADO 340 00	19, 102
170 ADO 340 00C	101
170 ADO 350 00	19, 102
170 ADO 350 00C	101
170 ADO 530 50	19
170 ADO 540 50	19
170 ADO 730 50	19
170 ADO 740 50	19
170 ADO 830 30	19
170 ADO 830 30	102
170 AEC 920 00	42, 102
170 AMM 090 00	34, 102
170 AMM 090 00C	101
170 AMM 090 01	34, 102
170 ANR 120 90	34, 102
170 ANR 120 91	34, 102
170 ARM 370 30	19, 102
170 ARM 390 31	19
170 BDM 090 00	19, 35
170 BNO 671 01	57
170 BSM 016 00	19
170 DNT 110 00	59
170 DNT 110 00C	101
170 ENT 110 01	49, 102
170 ENT 110 02	49, 102
170 ENT 110 02C	101
170 FNT 110 00	55
170 FNT 110 01	55, 102
170 FNT 110 20C	101
170 INT 110 00	57
170 INT 110 00C	101
170 INT 110 03	57, 102
170 INT 110 03C	101
170 MCI 007 00	57
170 MCI 020 10	75
170 MCI 020 36	75
170 MCI 020 80	75
170 MCI 021 10	53
170 MCI 021 20	53, 75
170 MCI 021 36	53
170 MCI 021 80	53, 75
170 MCI 041 10	75
170 MCI 100 01	57
170 NEF 110 21	53
170 NEF 110 21C	101
170 NEF 160 21	53
170 PNT 110 01C	101
170 PNT 110 20	53
170 PNT 160 20	53
170 XCP 100 00	57
170 XCP 200 00	19, 35
170 XTS 001 00	19, 35
170 XTS 002 00	19, 35
170 XTS 003 01	19, 35
170 XTS 004 01	19, 35
170 XTS 005 01	19, 35
170 XTS 006 01	19, 35
170 XTS 007 01	19, 35
170 XTS 008 01	19, 35
170 XTS 009 00	57
170 XTS 020 00	53, 75
170 XTS 021 00	53, 69, 75
170 XTS 022 00	75
170 XTS 040 00	69, 75
170 XTS 041 00	75
170 XTS 042 00	75
170 XTS 100 00	19, 35, 42, 59
170 XTS 120 00	19
171 CCC 760 10	68, 102
171 CCC 760 10C	101
171 CCC 780 10	68, 102
171 CCC 960 20	68, 102
171 CCC 960 20C	101
171 CCC 960 30	68, 102
171 CCC 960 30C	101
171 CCC 980 20	68, 102
171 CCC 980 30	68, 102
171 CCS 700 00	68, 102
171 CCS 700 10	68, 102
171 CCS 760 00	68, 102
171 CCS 760 00C	101
171 CCS 780 00	68, 102
172 JNN 210 32	75, 102
172 JNN 210 32C	101
172 PNN 210 22	75, 102
172 PNN 210 22C	101
172 PNN 260 22	75, 102
3	
332 SPU 470 01 V26	95
372 ESS 470 01	95
372 ESS 471 01	95
372 ESS 472 01	95
372 ESS 474 00	95
372 ESS 474 01	95
372 ESS 474 03	95
372 ESS 474 10	95
372 ESS 485 01	95
372 HVA 160 30 V25	95
372 SPU 471 01 V26	95
372 SPU 472 01 V26	95
372 SPU 474 01 V26	95
372 SPU 474 11 V26	95
372 SPU 474 21 V26	95
372 SPU 474 31 V26	95
372 SPU 477 01 V26	95
372 SPU 710 01 PLDV	99
372 SPU 710 01 PLTE	99
372 SPU 710 01 PLTH	99
372 SPU 780 01 DMAN	99
372 SPU 780 01 EMAN	99
372 SPU 780 01 FMAN	99
372 SPU 780 01 PDEV	99
372 SPU 780 01 PSEV	99
372 SPU 780 01 PSSV	99
372 SPU 780 01 PSTE	99
372 SPU 780 01 PSTH	99
372 SPU 780 01 SITE	99
372 SPU 780 01 SMAN	99
372 SPU 781 01 PONL	99
372 SPU 784 01 LPTE	99
372 SPU 784 01 LPTH	99
372 SPU 784 01 LPUP	99
372 SPU 784 01 SEAT	99
4	
424 244 739	69, 75
490 NAA 271 01	53, 75
490 NAA 271 02	53, 75
490 NAA 271 03	53, 75
490 NAA 271 04	53, 75
490 NAA 271 06	53, 75
490 NAB 000 10	53
490 NAD 911 03	59
490 NAD 911 04	59
490 NAD 911 05	59
490 NOC 000 05	79
490 NOR 000 03	79
490 NOR 000 05	79
490 NOT 000 05	79
490 NTC 000 05	78
490 NTC 000 05U	78
490 NTC 000 15	78
490 NTC 000 40	78
490 NTC 000 40U	78
490 NTC 000 80	78
490 NTC 000 80U	78
490 NTW 000 02	78
490 NTW 000 02U	78
490 NTW 000 05	78
490 NTW 000 05U	78
490 NTW 000 12	78
490 NTW 000 12U	78
490 NTW 000 40	78
490 NTW 000 40U	78
490 NTW 000 80	78
490 NTW 000 80U	78
490 USE 133 00	103
490 USE 133 01	103
490 USE 133 02	103
490 USE 133 03	103
499 NEH 104 10	80
499 NES 181 00	82
499 NMS 251 01	84
499 NMS 251 02	84
499 NSS 251 01	84
499 NSS 251 02	84
499 NTR 101 00	81
8	
840 USE 113 00	103
840 USE 492 0•	95
840 USE 493 0•	95
840 USE 494 0•	95
840 USE 495 01	95
840 USE 496 0•	95
870 USE 002 00	42, 103
870 USE 002 01	103
870 USE 002 02	103
870 USE 002 03	103
870 USE 003 00	103
870 USE 003 01	103
870 USE 004 00	103
870 USE 004 01	103
870 USE 004 02	103
870 USE 005 00	103
870 USE 005 01	103
870 USE 005 02	103
870 USE 005 03	103
870 USE 008 00	42, 103
870 USE 008 01	103
870 USE 008 02	103
870 USE 010 00	103
870 USE 010 01	103
870 USE 010 02	103
870 USE 010 03	103
870 USE 101 10	103
870 USE 101 11	103
870 USE 101 12	103
870 USE 101 13	103
870 USE 103 00	103
870 USE 103 01	103
870 USE 103 02	103
870 USE 105 00	103

870 USE 105 01	103
870 USE 105 02	103
870 USE 105 03	103
870 USE 111 00	103
870 USE 114 00	103
870 USE 114 01	103
870 USE 114 02	103
870 USE 114 03	103
890 USE 100 00	103
890 USE 100 01	103
890 USE 100 02	103
890 USE 100 03	103
890 USE 103 00	103
9	
900 NAD 211 10	53, 75
990 NAD 211 30	53, 75
990 NAD 218 10	53
990 NAD 218 30	53
990 NAD 219 10	53
990 NAD 219 30	53
990 NAD 230 00	53, 75
990 NAD 230 10	53, 75
990 NAD 230 11	53, 75
990 NAD 230 20	53
990 NAD 230 21	53
990 NAD 230 22	53
A	
AS MBKT 085	53, 75
AS MBKT 185	75
C	
CER 001	19, 35
K	
KAB 3225 LI	57
KAB PROFIB	59
T	
TCS EAA F11F13F00	79
TCS EAA F1LFH00	79
TCS EAA F1LFS00	79
TCS EAA F1LFU00	79
TCS EAM 0100	79
TCS ECL 1M1M 10S2	79
TCS ECL 1M1M 1S2	79
TCS ECL 1M1M 25S2	79
TCS ECL 1M1M 3S2	79
TCS ECL 1M1M 40S2	79
TCS ECL 1M3M 10S2	79
TCS ECL 1M3M 1S2	79
TCS ECL 1M3M 25S2	79
TCS ECL 1M3M 3S2	79
TCS ECL 1M3M 40S2	79
TCS ECN 300R2	78
TCS EK1 MDRS	78
TCS EK3 MDS	78
TCS ESM 043F1CS0	85
TCS ESM 043F1CU0	85
TCS ESM 043F2CS0	85
TCS ESM 043F2CU0	85
TCS ESM 103F23G0	89
TCS ESM 103F2LG0	89
TCS ESM 043F23F0	86
TCS ESM 083F1CS0	87
TCS ESM 083F1CU0	87
TCS ESM 083F23F0	86
TCS ESM 083F2CS0	87
TCS ESM 083F2CU0	87
TCS ESM 163F23F0	88
TCS ESM 163F2CU0	88
TCS ESM 243F2CU0	88
TCS ESU 033FN0	83
TCS ESU 043F1N0	83
TCS ESU 051F0	82
TCS ESU 053FN0	83
TSX DR FIP E	103
TSX DR FIP F	103
TSX DR FIP G	103
TSX DR FIP S	103
TSX FP ACC 12	55
TSX FP ACC 14	55
TSX FP ACC 2	55
TSX FP ACC 4	55
TSX FP CC 100	55
TSX FP CC 200	55
TSX FP CC 500	55
TSX IBS CA 100	57
TSX IBS CA 400	57
TSX PBS CA 100	59
TSX PBS CA 400	59
X	
XZC C12 FCM 50B	79, 82
XZC C12 FDM 50B	79, 82
XZC P1164L2	79, 82
XZC P1164L5	79, 82
XZC P1264L2	79, 82
XZC P1264L5	79, 82

Schneider Electric USA, Inc.

http://www.schneider-electric.us/

8001 Knightdale Blvd.
Knightdale, NC 27545
Tel: 919-266-3671

The information and dimensions in this catalog are provided for the convenience of our customers. While this information is believed to be accurate, Schneider Electric reserves the right to make updates and changes without prior notification and assumes no liability for any errors or omissions.

Schneider Electric Canada

19 Waterman Avenue
Toronto, Ontario M4B 1Y2
Tel: 416-752-8020

Design: Schneider Electric
Photos: Schneider Electric

MKTED205061EN-US

© 2011 Schneider Electric. All rights reserved.

01/2011