Address: Midas Displays, Electra House, 32 Southtown Road, Great Yarmouth, Norfolk, NR31 0DU
Telephone: +44 (0)1493 602602
Fax: +44 (0)1493 665111
Email: sales@midasdisplays.com
Website: www.midasdisplays.com

# Specification

# MC122032B6W-SPTLY

| DOC. | DATASHEET STATEMENT |
|---|---|

1. The following icons are absolutely designed by Midas independently in 2007-SEP. They are not in common use in the LCD industry yet but just used for marking out Midasproducts' characteristics quickly and simply without any special meaning. Midas reserves the composing right and copyright.
   No one else is allowed to adopt these icons without Midas approval.

2. The ISO9001 logo used in this document is authorized by SGS (www.sgs.com). Midas had already successfully passed the strict and professional ISO9001:2000 Quality Management System Certification and got the certificate (No.: CN07/00404)

3. The technologies/techniques/crafts which denoted by the following icons are not exclusively owned by Midas, but also shared by Midas LCD strategic cooperators, however all these technologies/techniques/crafts have been finally confirmed by Midas professional engineers and QC department.

4. As the difference in test standard and test conditions, also Midas insufficient familiarity with the actual LCD using environment, all the referred information in this DATASHEET (including the icons) only have two functions:
   4.1: providing quick reference when you are judging whether or not the product meets your requirements.
   4.2: listing out definitely the tolerance.

   SAMPLE APPROVAL document rather than consider this DATASHEET as the standard for judging whether or not the LCD meets your requirements. Once you instruct Midas to a mass-production without definite demand for providing sample before, Midas will disclaim all responsibility if the mass-production is proved not meeting with your requirements.

5. The sequence of the icons is random and doesn't indicate the importance grade.

6. Icons explanation

Midas 2006 version logo.Midas is an integrated manufacturer of flat panel display (FPD). Midas supplies TN, HTN, STN, FSTN monochrome LCD panel; COB, COG, TAB LCD module; and all kinds of LED backlight.

**FAST RESPONSE TIME**
This icon on the cover indicates the product is with high response speed; Otherwise not.

**PROTECTION CIRCUIT**
This icon on the cover indicates the product is with protection circuit; Otherwise not.

**HIGH CONTRAST**
This icon on the cover indicates the product is with high contrast; Otherwise not.

**LONG LIFE VERSION**
This icon on the cover indicates the product is long life version (over 9K hours guaranteed); Otherwise not.

**WIDE VIEWING SCOPE**
This icon on the cover indicates the product is with wide viewing scope; Otherwise not.

**Anti UV VERSION**
This icon on the cover indicates the product is against UV line. Otherwise not.

**RoHS COMPLIANCE**
This icon on the cover indicates the product meets ROHS requirements; Otherwise not.

**OPERATION TEMPERATURE RANGE**
This icon on the cover indicates the operating temperature range (X-Y).

**3TIMEs 100% QC EXAMINATION**
This icon on the cover indicates the product has passed Midas thrice 100% QC. Otherwise not.

**TWICE SELECTION OF LED MATERIALS**
This icon on the cover indicates the LED had passed Midas twice strict selection which promises the product's identical color and brightness; Otherwise not.

**VIcm = 3.0V**
This icon on the cover indicates the product can work at 3.0V exactly; otherwise not.

**N SERIES TECHNOLOGY (2008 developed)**
New structure, new craft, new technology and new materials inside both LCD module and LCD panel to improve the "RainBow"

| STANDARD DOC. | REVISION RECORD | PAGE | 1/20 |
|---|---|---|---|

| NO. | DATE | DESCRIPTION | ITEM | PAGE | APPROVED |
|---|---|---|---|---|---|
| 1 | 2005.05 | INITIAL ISSUED | ALL | ALL | LU BOO |
| 2 | 2007.04 | Added further information of LED backlight | 4 | 4/20 | |

Address: Midas Displays, Electra House, 32 Southtown Road, Great Yarmouth, Norfolk, NR31 0DU
Telephone: +44 (0)1493 602602
Fax: +44 (0)1493 665111
Email: sales@midasdisplays.com
Website: www.midasdisplays.com

# Midas LCD Part Number System

| MC | COG | 132033 | A | * | 6 | W | * | * | - | S | N | T | L | W | * | * |
|---|---|---|---|---|---|---|---|---|---|---|---|---|---|---|---|---|
| 1 | 2 | 3 | 4 | 5 | 6 | 7 | 8 | 9 | - | 10 | 11 | 12 | 13 | 14 | 15 | 16 |

1 = **MC:** Midas Components

2 = **Blank:** COB (chip on board) **COG**: chip on glass

3 = **No of dots** (e.g. 240064 = 240 x 64 dots) (e.g. 21605 = 2 x 16 5mm C.H.)

4 = **Series**

5 = **Series Variant:** A to Z – **see addendum**

6 = **3:** 3 o'clock **6:** 6 o'clock **9**: 9 o'clock **12**: 12 o'clock

7 = S: Normal (0 to + 50 deg C) **W:** Wide temp. (-20 to + 70 deg C) **X:** Extended temp (-30 + 80 Deg C)

8 = **Character Set**

**Blank:** Standard (English/Japanese)
**C:** Chinese Simplified (Graphic Displays only)
**CB:** Chinese Big 5 (Graphic Displays only)
**H:** Hebrew
**K:** European (std) (English/German/French/Greek)
**L:** English/Japanese (special)
**M:** European (English/Scandinavian)
**R:** Cyrillic
**W:** European (English/Greek)
**U:** European (English/Scandinavian/Icelandic)

9 = **Bezel Height** (where applicable / available)

| | Top of Bezel to Top of PCB | Common (via pins 1 and 2) | Array or Edge Lit |
|---|---|---|---|
| **Blank** | 9.5mm / not applicable | Common | Array |
| **2** | 8.9 mm | Common | Array |
| **3** | 7.8 mm | Separate | Array |
| **4** | 7.8 mm | Common | Array |
| **5** | 9.5 mm | Separate | Array |
| **6** | 7 mm | Common | Array |
| **7** | 7 mm | Separate | Array |
| **8** | 6.4 mm | Common | Edge |
| **9** | 6.4 mm | Separate | Edge |
| **A** | 5.5 mm | Common | Edge |
| **B** | 5.5 mm | Separate | Edge |
| **D** | 6.0mm | Separate | Edge |
| **E** | 5.0mm | Separate | Edge |
| **F** | 4.7mm | Common | Edge |
| **G** | 3.7mm | Separate | EL |

10 = **T:** TN S: STN **B:** STN Blue **G:** STN Grey **F:** FSTN **F2:** FFSTN

11 = **P:** Positive **N**: Negative

12 = **R:** Reflective **M**: Transmissive **T:** Transflective

13 = **Backlight: Blank:** Reflective **L:** LED

14 = **Backlight Colour: Y:** Yellow-Green **W:** White **B:** Blue **R:** Red **A:** Amber **O:** Orange **G:** Green **RGB:** R.G.B.

15 = **Driver Chip: Blank:** Standard **I:** I²C **T:** Toshiba T6963C **A:** Avant SAP1024B **R:** Raio RA6963

16 = **Voltage Variant**: e.g. **3** = 3v

## 1. GENERAL SPECIFICATIONS

| ITEM | NOMINAL DIMENSIONS / AVAILABLE OPTIONS |
|---|---|
| DISPLAY FORMAT | 122 X 32 DOT MATRIX |
| LCD PANEL OPTIONS | STN (Yellow-Green color) |
| POLARIZER OPTIONS | Positive, Transflective |
| BACKLIGHT OPTIONS | Array type LED backlight (Yellow-Green color) |
| VIEWING ANGLE OPTIONS | 6:00 ( Bottom ) |
| TEMPERATURE RANGE OPTIONS | Wide temperature range ( - 20°C ~ 70°C ) |
| CONTROLLER IC | AVANT |
| DISPLAY DUTY | 1/32 |
| DRIVING BIAS | 1/7 |

## 2. MECHANICAL SPECIFICATIONS

| | | | | | |
|---|---|---|---|---|---|
| OVERALL SIZE | LED backlight version : 84.0 x 44.0 x max 15.0 | | | | mm |
| VIEWING AREA | 64.0W x 17.9H | mm | HOLE-HOLE | 76.0W x 36.0H | mm |
| DOT SIZE | 0.40W x 0.45H | mm | DOT PITCH | 0.04W x 0.04H | mm |
| WEIGHT (EL BKL) | 86.0 | g | WEIGHT (LED BKL) | 105.0 | g |

## 3. ABSOLUTE MAXIMUM RATINGS

| ITEM | SYMBOL | CONDITION | MIN | MAX | UNIT |
|---|---|---|---|---|---|
| POWER SUPPLY ( LOGIC) | Vdd | 25°C | -0.3 | 7.0 | V |
| POWER SUPPLY (LCD) | V0 | 25°C | Vdd -13.5 | Vdd +0.3 | V |
| INPUT VOLTAGE | Vin | 25°C | -0.3 | Vdd +0.3 | V |
| OPERATING TEMPERATURE | Vopr | ––– | -20 | 70 | °C |
| STORAGE TEMPERATURE | Vstg | ––– | -30 | 80 | °C |

## 4. ELECTRONICAL CHARACTERISTIC*

| ITEM | SYMBOL | CONDITION | STANDARD | | | UNIT |
|---|---|---|---|---|---|---|
| | | | MIN | TYP | MAX | |
| Input voltage | Vdd | +5V | 4.7 | 5.0 | 5.5 | V |
| Supply current | Idd | Vdd=5V | ––– | 0.9 | ––– | mA |
| Recommended LCD driving voltage for normal temp. Version module | Vdd - V0 | -20°C | 4.10 | ––– | 4.50 | V |
| | | 0°C | 4.20 | ––– | 4.50 | |
| | | 25°C | 4.20 | 4.40 | 4.50 | |
| | | 50°C | 4.10 | ––– | 4.45 | |
| | | 70°C | 3.90 | ––– | 4.40 | |
| LED forward voltage | Vf | 25°C | 4.0 | 4.2 | 4.4 | V |
| LED forward current | If | 25°C | ––– | 120 | ––– | mA |
| LED reverse Current | Ir | 25°C | ––– | ––– | 600 | μA |
| LED Peak wave length | λp | 25°C If = 120mA | 568 | ––– | 575 | nm |
| LED illuminance (Without LCD) | Lv | 25°C If = 120mA | 158 | 198 | ––– | cd/m$^2$ |
| LED life time | ––– | 25°C If = 120mA | 9K** | ––– | ––– | Hours |

* The above data are for reference only.

** If you wanted to drive the LED BKL uninterruptedly exceed 12hours/day, you are not suggested this version

## 5. OPTICAL CHARACTERISTICS

**FOR TN TYPE LCD MODULE ($T_A$=25 °C, Vdd=5.0V ± 0.25V)**

| ITEM | SYMBOL | CONDITION | MIN | TYP | MAX | UNIT |
|---|---|---|---|---|---|---|
| VIEWING ANGLE | Φ2–Φ 1 | K=4 | 30 | ––– | ––– | deg |
| | θ | | 25 | | | |
| CONTRAST RATIO | K | ––– | ––– | 2 | ––– | ––– |
| RESPONSE TIME(RISE) | $T_R$ | ––– | ––– | 120 | 150 | ms |
| RESPONSE TIME(FALL) | $T_F$ | ––– | ––– | 120 | 150 | ms |

**FOR STN TYPE LCD MODULE ($T_A$=25 °C, Vdd=5.0V ± 0.25V)**

| ITEM | SYMBOL | CONDITION | MIN | TYP | MAX | UNIT |
|---|---|---|---|---|---|---|
| VIEWING ANGLE | Φ2–Φ 1 | K=4 | 40 | ––– | ––– | deg |
| | θ | | 60 | | | |
| CONTRAST RATIO | K | ––– | ––– | 6 | ––– | ––– |
| RESPONSE TIME(RISE) | $T_R$ | ––– | ––– | 150 | 250 | ms |
| RESPONSE TIME(FALL) | $T_F$ | ––– | ––– | 150 | 250 | ms |



**DEFINITION OF ANGLE Φ & θ**

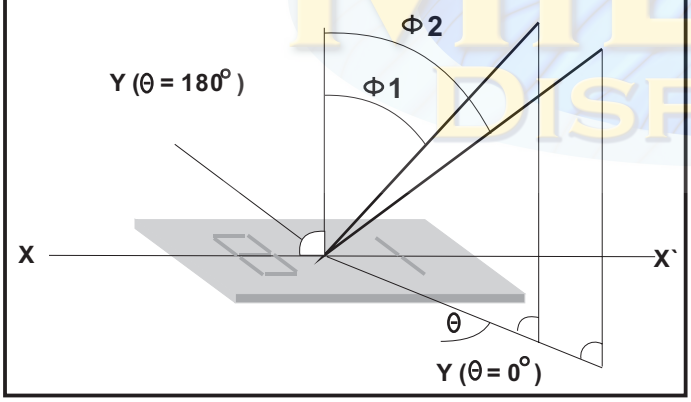


**DEFINITION OF VIEWING ANGLE Φ1 & Φ2**

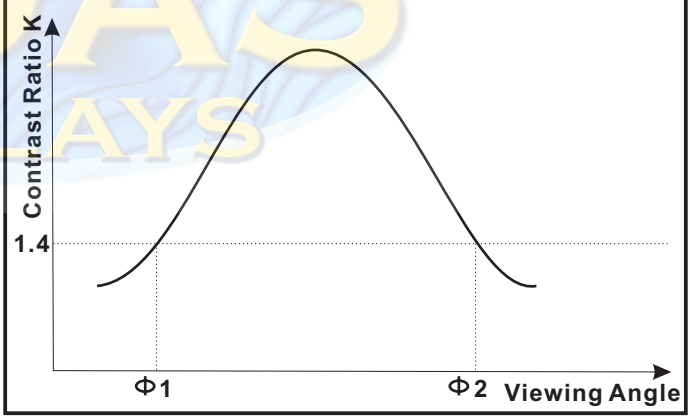


**DEFINITION OF CONTRAST RATIO K(=B2/B1)**

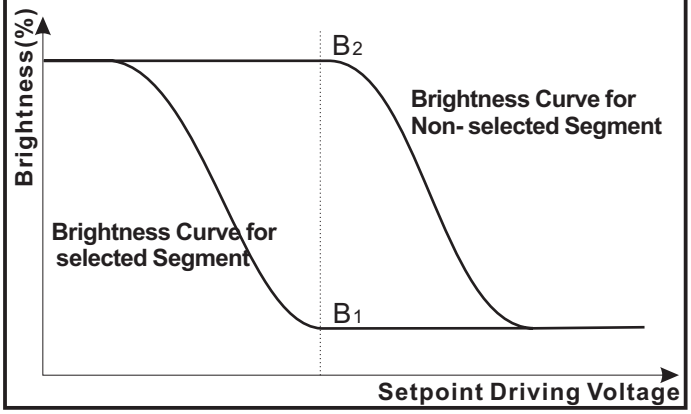


**DEFINITION OF OPTICAL RESPONSE TIME $T_R$ & $T_F$**

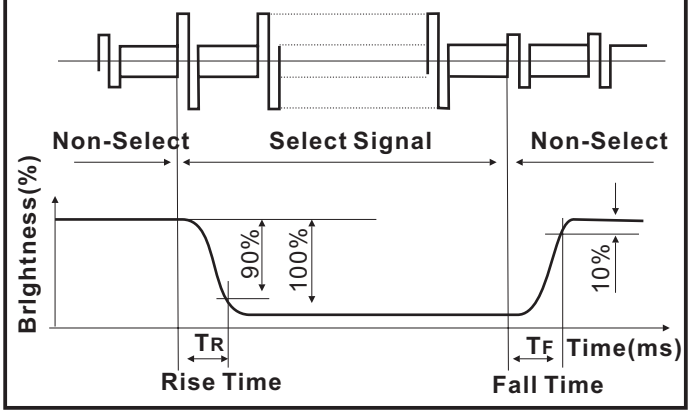

## 6. AC CHARACTERISTIC

$V_{dd}$=5.0V±10%,$V_{SS}$=0V,$T_a$ = -20 ~ +75 °C

| Parameter | | Symbol | Min | Max | Condition | Unit |
|---|---|---|---|---|---|---|
| Address set up time | | $t_{AW6}$ | 20 | — | — | ns |
| Address hold time | | $t_{AH6}$ | 10 | — | | ns |
| System cycle time | | $t_{CYC6}$ | 1000 | — | | ns |
| E pulse width | Read | $t_{EW}$ | 100 | — | | ns |
| | Write | | 80 | — | | ns |
| Data set up time | | $t_{DS6}$ | 80 | — | | ns |
| Data hold time | | $t_{DH6}$ | 10 | — | | ns |
| Access time | | $t_{ACC6}$ | — | 90 | $C_L$=100pF | ns |
| Output disable time | | $t_{OH6}$ | 10 | 60 | | ns |

*Input signal rise time and fall time are less than 15ns.

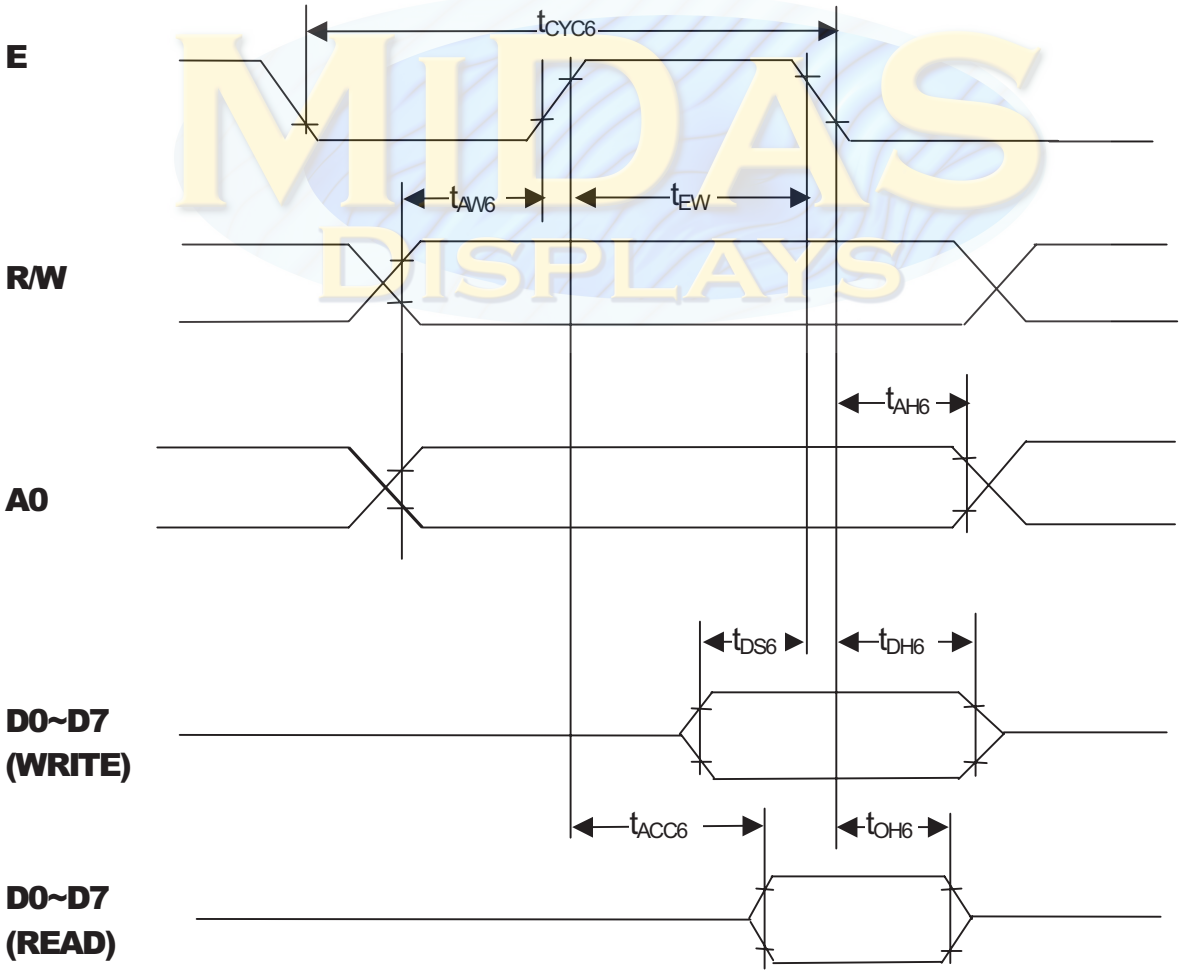

## 7.EXTERNAL DIMENSIONS

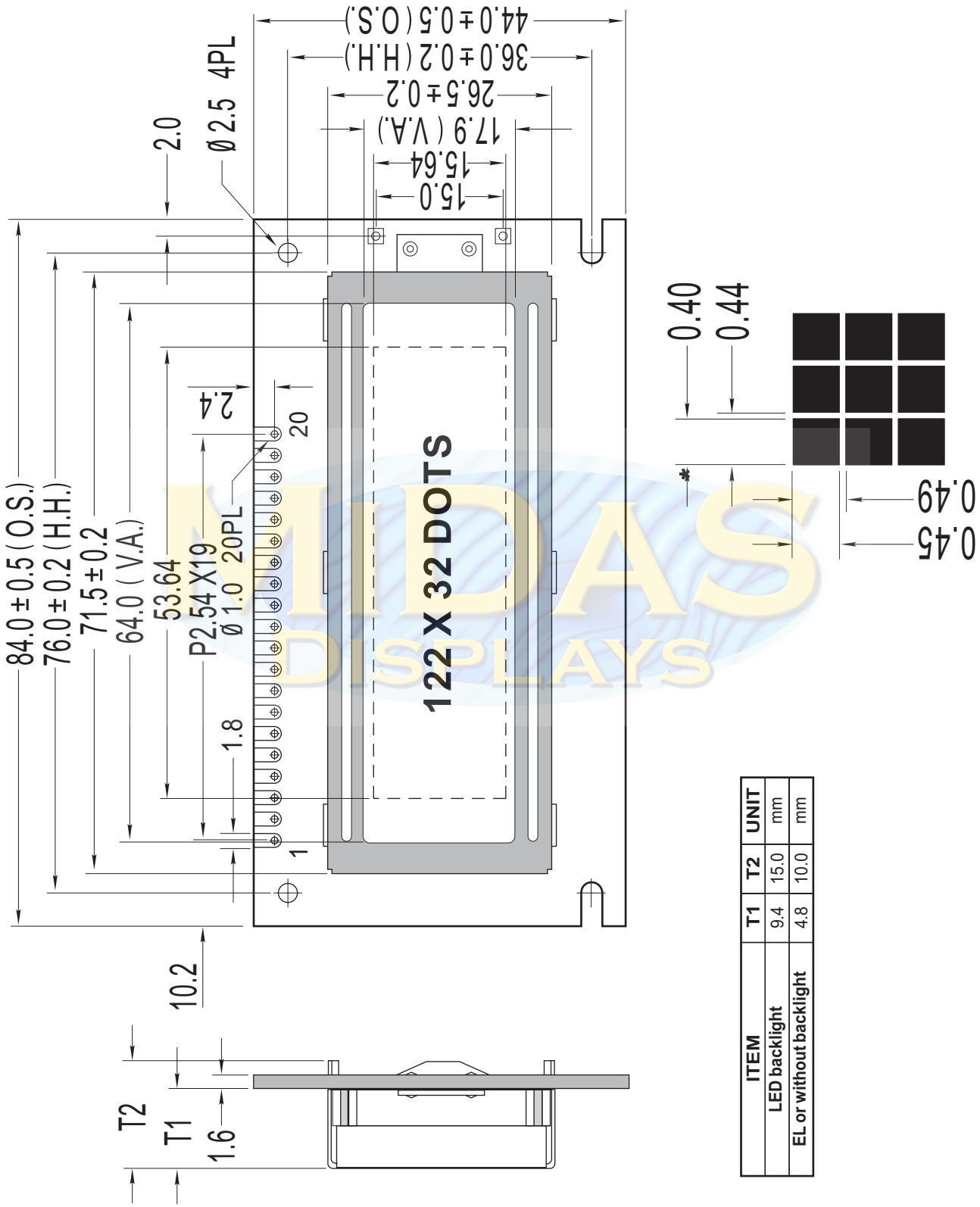


| ITEM | T1 | T2 | UNIT |
|---|---|---|---|
| LED backlight | 9.4 | 15.0 | mm |
| EL or without backlight | 4.8 | 10.0 | mm |

## 8. PIN ASSIGNMENT

| PIN NO. | SYMBOL | FUNCTION | | REMARK |
|---|---|---|---|---|
| 1 | Vss | Power Supply | 0V | |
| 2 | Vdd | | +5V | |
| 3 | V0 | | Contrast Adjust | |
| 4 | A0 | H/L H: Data; L: Instruction code | | |
| 5 | CS1 | Chip 1 Enable signal | | |
| 6 | CS2 | Chip 2 Enable signal | | |
| 7 | CL | Clock Input (2K Hz) | | |
| 8 | E | Enable Signal | | |
| 9 | R/W | Read / Write | | |
| 10 | DB0 | Data Bit 0 | | |
| 11 | DB1 | Data Bit 1 | | |
| 12 | DB2 | Data Bit 2 | | |
| 13 | DB3 | Data Bit 3 | | |
| 14 | DB4 | Data Bit 4 | | |
| 15 | DB5 | Data Bit 5 | | |
| 16 | DB6 | Data Bit 6 | | |
| 17 | DB7 | Data Bit 7 | | |
| 18 | RST | Reset Signal | | |
| 19 | LED+ | Anode of LED Unit | | +5V |
| 20 | LED- | Cathode of LED Unit | | 0V |



## 9 .1 . BLOCK DIAGRAM

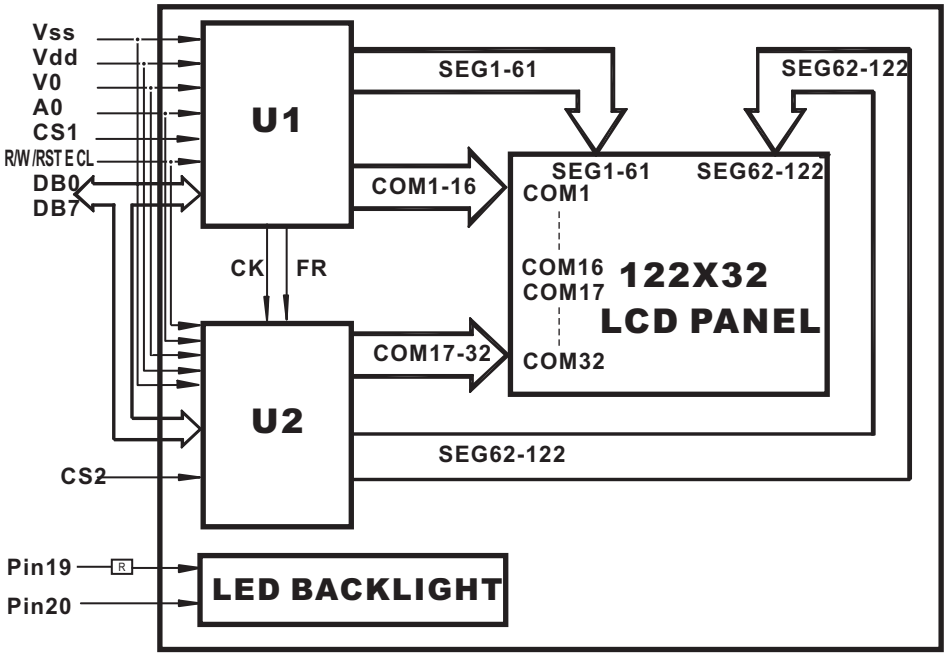


## 9.2 . POWER SUPPLY

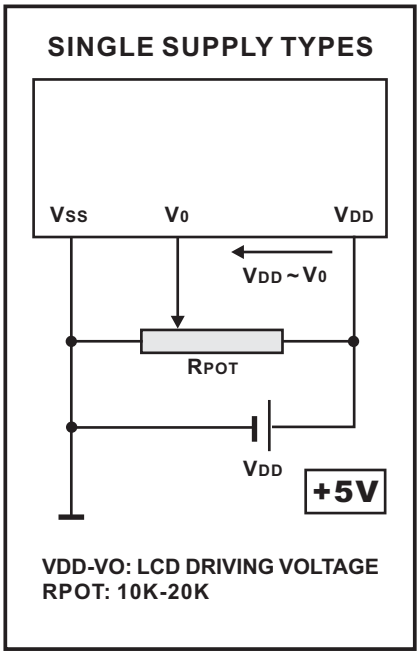

## 10. RELATION BETWEEN DISPLAY PATTERN AND DRIVERS

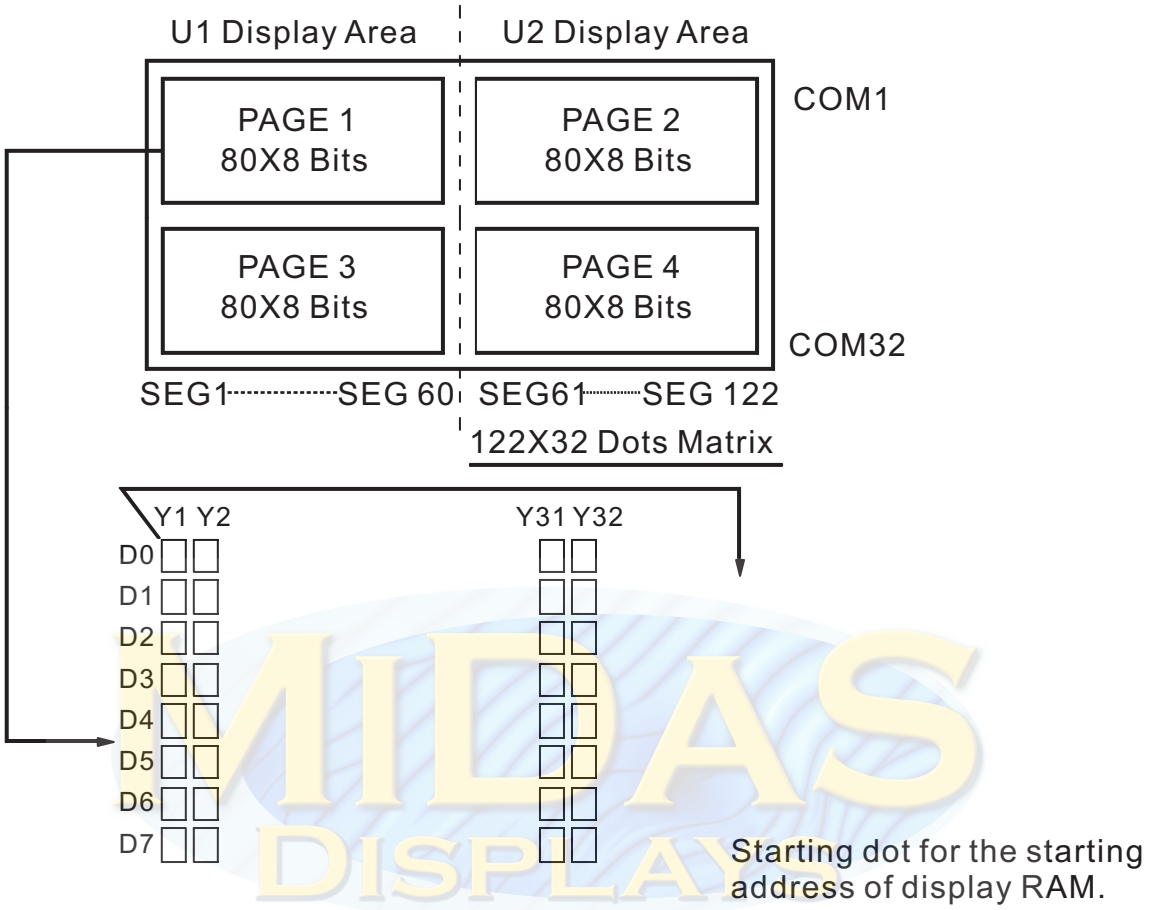


Each segment driver has 4 pages RAM, and each page has 80x8 bits RAM. D0~D7 are 8 bits transmitted data, where D0 is LSB and D7 is MSB.

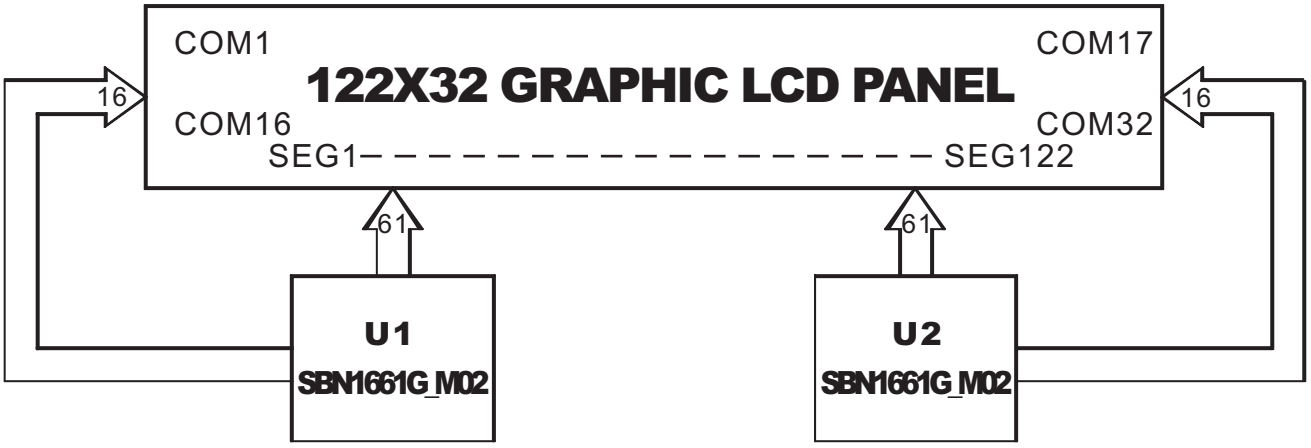

## 11. INSTRUCTIONCODE

| Instruction | A0 | R/W | D7 | D6 | D5 | D4 | D3 | D2 | D1 | D0 | Description |
|---|---|---|---|---|---|---|---|---|---|---|---|
| Display on/off | 0 | 0 | 1 | 0 | 1 | 0 | 1 | 1 | 1 | 0/1 | Whole disp on/off<br>1: on 0: off |
| Display Start line | 0 | 0 | 1 | 1 | 0 | DISPLAY START ADDRESS (1-31) | | | | | Determine the disp line correspond to the COM0 |
| Page address set | 0 | 0 | 1 | 0 | 1 | 1 | 1 | 0 | Page (0-3) | | Set the page of disp data RAM |
| Column address set | 0 | 0 | 0 | Column address(0-79) | | | | | | | Set the column address of disp data RAM |
| Status read | 0 | 1 | BUSY | ADC | ON/OFF | RESET | 0 | 0 | 0 | 0 | BUSY<br>0: ready 1: working<br>ADC 0: counter clockwise<br>1; clockwise output<br>ON/OFF 0: disp on 1: disp off<br>RESET 0; normal 1: reset |
| Write display data | 1 | 0 | Write data | | | | | | | | Write data to disp RAM<br>Access the predetermind address of the disp RAM |
| Read display data | 1 | 1 | Read data | | | | | | | | Read data from disp RAM |
| ADC select | 0 | 0 | 1 | 0 | 1 | 0 | 0 | 0 | 0 | 0/1 | Determine the mode reading of the disp RAM<br>0: clockwise output<br>1: counter clockwise output |
| Static drive on/off | 0 | 0 | 1 | 0 | 1 | 0 | 0 | 1 | 0 | 0/1 | Select the dynamic or static driving 1: static driving<br>0: dynamic driving |
| Duty ratio select | 0 | 0 | 1 | 0 | 1 | 0 | 1 | 0 | 0 | 0/1 | Select the duty ratio<br>0: 1/16 1: 1/32 |
| Read Modify write | 0 | 0 | 1 | 1 | 1 | 0 | 0 | 0 | 0 | 0 | Increment the column address register when writing but no change when reading |
| END | 0 | 0 | 1 | 1 | 1 | 0 | 1 | 1 | 1 | 0 | Release from the Read Modify Write mode |
| Reset | 0 | 0 | 1 | 1 | 1 | 0 | 0 | 0 | 1 | 0 | Set the display start line register to 1st line, page add register to 3. |
| Power save (dual command) | 0<br>0 | 0<br>0 | 1<br>1 | 0<br>0 | 1<br>1 | 0<br>0 | 1<br>0 | 1<br>1 | 1<br>0 | 0<br>1 | Set the power save mode by selecting disp off and static driving on. |

## 12. INSTRUCTION DESCRIPTION

### A. Display On / Off

This is instruction executes whole display On/Off no relation with the data in the Display Data RAM and internal conditions.

| | A0 | R/W | D7 | D6 | D5 | D4 | D3 | D2 | D1 | D0 |
|---|---|---|---|---|---|---|---|---|---|---|
| Code | 0 | 0 | 1 | 0 | 1 | 0 | 1 | 1 | 1 | D |

D 0 : Display On
1: Display Off

When the static driving mode is selected ( static drive On ) in display Off status, the internal circuits put on the power save mode.

### B. Display Start Line

This instruction set the line address. The selected line in the Display Data RAM correspond to the COM0 which display at the top of LCD panel
The display area is set automatically from the selected line to the line which increased the one or page switching are available by this instruction.

| | A0 | R/W | D7 | D6 | D5 | D4 | D3 | D2 | D1 | D0 |
|---|---|---|---|---|---|---|---|---|---|---|
| Code | 0 | 0 | 1 | 1 | 0 | A 4 | A 3 | A 2 | A 1 | A 0 |

| A4 | A3 | A2 | A1 | A0 | Line Address |
|---|---|---|---|---|---|
| 0 | 0 | 0 | 0 | 0 | 0 |
| | | | | 1 | 1 |
| | | | | | |
| 1 | 1 | 1 | 1 | 0 | 1E |
| 1 | 1 | 1 | 1 | 1 | 1F |

## C. Page Address Set

When MPU access the display Data RAM, the page address corresponded to the row address must be selected.

The access in the display Data RAM is available by setting the page and column address. The display is no change when the page address is changed.

| | A0 | R/W | D7 | D6 | D5 | D4 | D3 | D2 | D1 | D0 |
|---|---|---|---|---|---|---|---|---|---|---|
| Code | 0 | 0 | 1 | 0 | 1 | 1 | 1 | 0 | A1 | A0 |

| A1 | A0 | Page |
|---|---|---|
| 0 | 0 | 0 |
| 0 | 1 | 1 |
| 1 | 0 | 2 |
| 1 | 1 | 3 |

## D. Column Address Set

This instruction set the column address in the Display Data RAM.
When the MPU access the Display Data RAM continuously, the column address increase 1 automatically, therefore, the MPU can access the data only without address setting.
The increment of the column address is stopped by the address of 50H automatically, but the page address is no change even if the column address increase to 50H and stop.

| | A0 | R/W | D7 | D6 | D5 | D4 | D3 | D2 | D1 | D0 |
|---|---|---|---|---|---|---|---|---|---|---|
| Code | 0 | 0 | 0 | A6 | A5 | A4 | A3 | A2 | A1 | A0 |

| A6 | A5 | A4 | A3 | A2 | A1 | A0 | ColumnAdd. |
|---|---|---|---|---|---|---|---|
| 0 | 0 | 0 | 0 | 0 | 0 | 0 | 0 |
| 0 | 0 | 0 | 0 | 0 | 0 | 1 | 1 |
| | | | | | | | |
| 1 | 0 | 0 | 1 | 1 | 1 | 0 | 4E |
| 1 | 0 | 0 | 1 | 1 | 1 | 1 | 4F |

## E. Status Read

This instruction read out the internal status.

| | A0 | R/W | D7 | D6 | D5 | D4 | D3 | D2 | D1 | D0 |
|---|---|---|---|---|---|---|---|---|---|---|
| Code | 0 | 1 | BUSY | ADC | ON/OFF | RESET | 0 | 0 | 0 | 0 |

BUSY: BUSY=1 indicate the operating or the Reset cycle
The instruction can be input after the BUSY status change to 0.

ADC: Indicate the output correspondence of column ( segment ) address and segment driver.
0: Counter clockwise Output (Inverse)
Column Address 79 - n ←——→ Segment Driver n
1: Clockwise Output (Normal)
Column Address n ←——→ Segment Driver n

ON/OF: Indicate the whole display On / Off status.
0 : Whole Display On
1 : Whole Display Off
(**Note**) The data 0 = On and 1 = Off of Display On/ Off status read out is inverted with the Display On/Off instruction data of 1 = On and 0 = Off

RESET: Indicate the initialization period by reset instruction.
0: ——
1: Initialization Period

## F. Write Display Data

This instruction write the 8-bit data on the data bus into the Display RAM.
The column ( segment ) address increase 1 automatically when writing, therefore, the MPU can write the 8-bit data into the Display Data RAM without address setting.

| | A0 | R/W | D7 | D6 | D5 | D4 | D3 | D2 | D1 | D0 |
|---|---|---|---|---|---|---|---|---|---|---|
| **61SEG** | 1 | 0 | WriteData | | | | | | | |

## G. Read Display Data

This instruction read out the 8-bit data from Display Data RAM which addressed by the column and page address. In case of the Read Modify Write Mode is Off, the column address increase 1 automatically after each read out, therefore, the MPU can read out the 8-bit data from the Display Data RAM continuously without address setting.

| | A0 | R/W | D7 | D6 | D5 | D4 | D3 | D2 | D1 | D0 |
|---|---|---|---|---|---|---|---|---|---|---|
| Code | 1 | 1 | Read Data | | | | | | | |

## H. ADC Select

This instruction set the correspondence of column address in the Display Data RAM and segment driver out. Therefore, the order fo segment output can be changed by the software, and no restriction of the LSI placement against the LCD panel.

| | A0 | R/W | D7 | D6 | D5 | D4 | D3 | D2 | D1 | D0 |
|---|---|---|---|---|---|---|---|---|---|---|
| Code | 0 | 0 | 1 | 0 | 1 | 0 | 0 | 0 | 0 | D |

D 0 : Clockwise Output (Inverse)
1: Counter Clockwise Output (Normal)



## I. Static Drive On/ Off

This instruction executes the all common output terms on and whole display on obligatory

| | A0 | R/W | D7 | D6 | D5 | D4 | D3 | D2 | D1 | D0 |
|---|---|---|---|---|---|---|---|---|---|---|
| Code | 0 | 0 | 1 | 0 | 1 | 0 | 0 | 1 | 0 | D |

D 0: Static Drive Off (Normal Operation)
1: Static Drive On (Whole Display Turns On)

When the Display Off mode is selected ( Display Off ) in Static Driver On status, the internal circuits put on the power save mode.

## J. Duty ratio Select

This instruction set the LCD driving duty ratio.

| | A0 | R/W | D7 | D6 | D5 | D4 | D3 | D2 | D1 | D0 |
|---|---|---|---|---|---|---|---|---|---|---|
| Code | 0 | 0 | 1 | 0 | 1 | 0 | 1 | 0 | 0 | D |

D 0 : 1/16 Duty
1 : 1/32 Duty

## K. Read Modify Write

After this instruction is executed, the column address increase 1 automatically when Display Data Write Instruction execution, but the address is not changed when the Display Data Read Instruction execution.

This status continues during End instruction execution. When the End instruction is entered the column address back to the address where Read Modify Write instruction entering. By this function, the load of MPU for example cyclic data writing operation like as cursor blink etc., can be reduced.

| | A0 | R/W | D7 | D6 | D5 | D4 | D3 | D2 | D1 | D0 |
|---|---|---|---|---|---|---|---|---|---|---|
| Code | 0 | 0 | 1 | 1 | 1 | 0 | 0 | 0 | 0 | 0 |

**(Note)** During the Read Modify Write mode, any instruction except Column Address Set can be executed.

## L. Sequence of cursor display

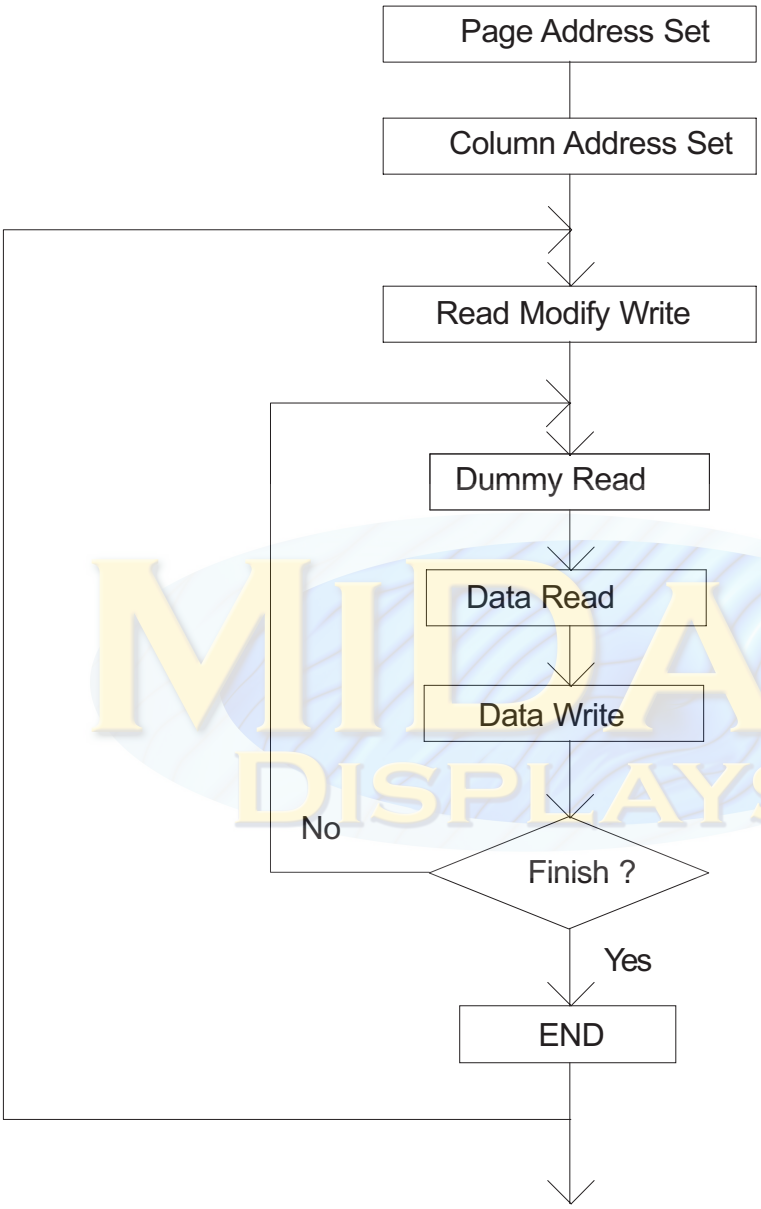

## M. End

This instruction release the Read Modify Write mode and the column address back to the address where the Read Modify Write mode setting.

| | A0 | R/W | D7 | D6 | D5 | D4 | D3 | D2 | D1 | D0 |
|---|---|---|---|---|---|---|---|---|---|---|
| Code | 0 | 0 | 1 | 1 | 1 | 0 | 1 | 1 | 1 | 0 |

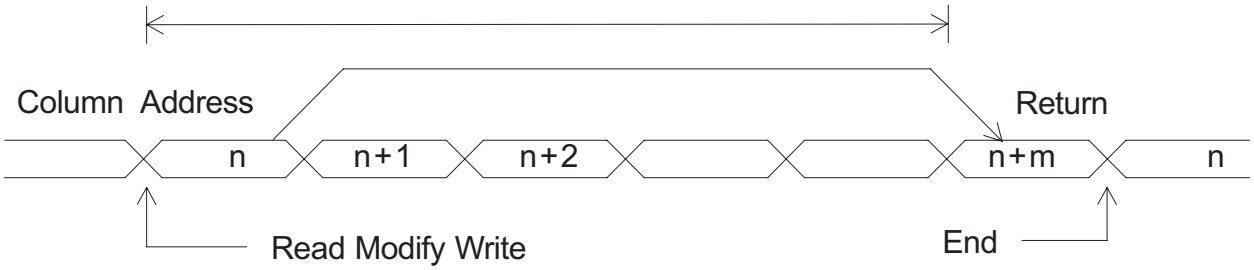


## N. Reset

This instruction executes the following initialization.

INitialization

1) Set the first line in the Display Start Line Register.
2) Set the page 3 in the Page Register.

In this time, there are no influence to the Display Data RAM.

| | A0 | R/W | D7 | D6 | D5 | D4 | D3 | D2 | D1 | D0 |
|---|---|---|---|---|---|---|---|---|---|---|
| Code | 0 | 0 | 1 | 1 | 1 | 0 | 0 | 0 | 1 | 0 |

**(Note)** The initialization when the power terms on can not be executed by Reset instruction

## O. Power Save ( Dual Command )

When both of Display Off and Static Drive On are executed, the internal put on the power save mode and the current consumption is reduced as same as stand by current. The internal status in this mode are as following:

1) Stop the LCD driving. Segment and Common drivers output Vdd level
2) Stop the oscillation or inhibit the external clock input
3) Keeping the display data and operating mode.

The power save mode is released by Display on or static drive off instruction.

## 13. APPLICATION EXAMPLE

### Application Flowchart

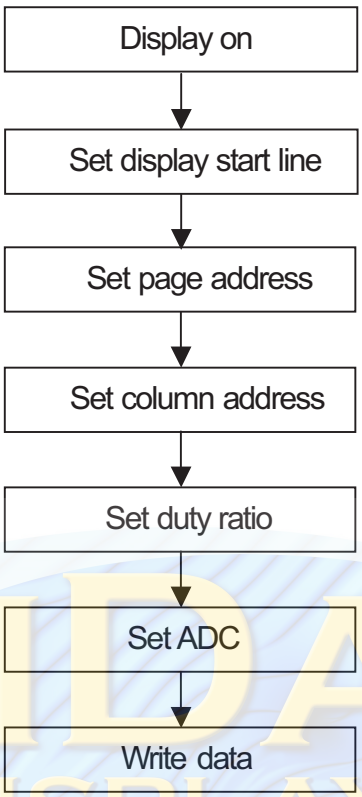




### Application Circuit

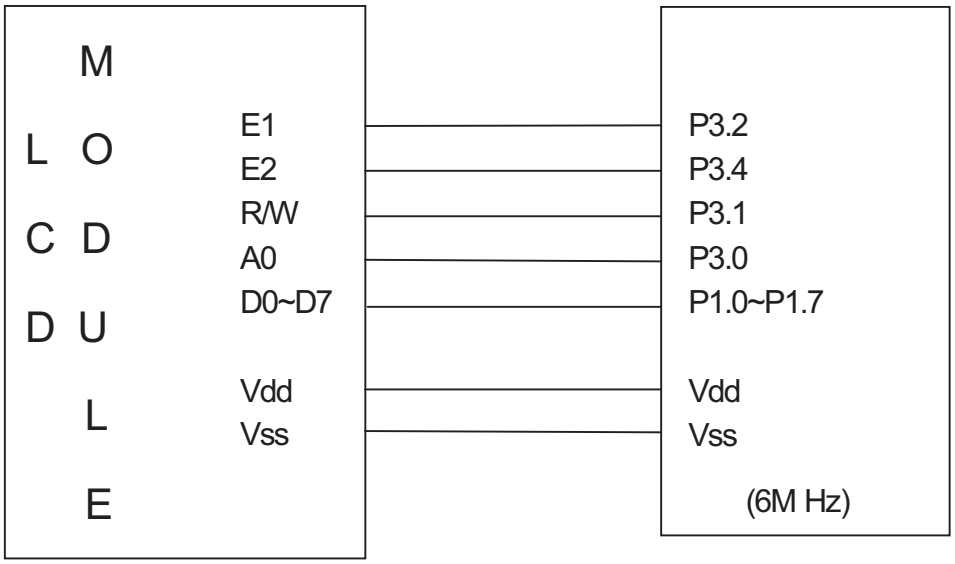

## Application Circuit 1

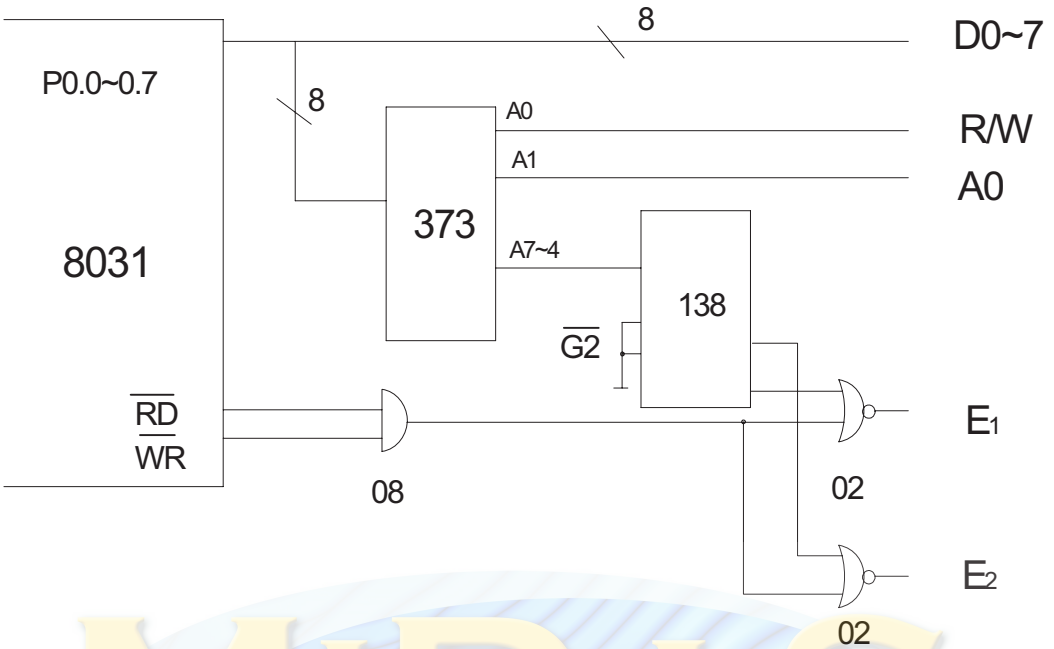


## Application Circuit 2

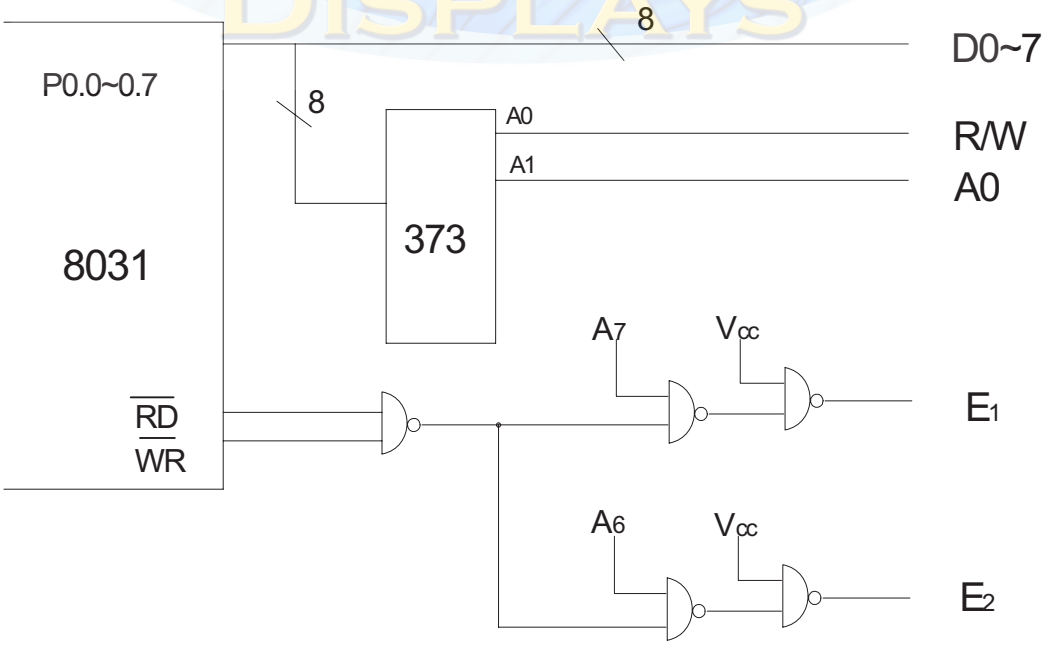

## 14. PACKING DETAIL

| WITH LED BKL | WITHOUT LED BKL |
|---|---|
| 45 PCS/BOX | 45 PCS/BOX |
| 10 BOXES/CARTON | 10 BOXES/CARTON |
| 450 PCS/CARTON | 450 PCS/CARTON |
| 20.00 KGS/CTN(G.W.) | 18.00 KGS/CTN(G.W.) |
| 0.07 $M^3$/CARTON | 0.07 $M^3$/CARTON |

| NOTE |
|---|
| 1. The weight is estimated for reference only. |
| 2. Packing detail may be changed without notice. |
| |
| |
| |